TPC Benchmark™ C
Full Disclosure Report
for
Dell PowerEdge 6600
Using
Microsoft SQL Server 2000 8.0 Enterprise Edition
and
Microsoft Windows .NET Enterprise Server

Third Edition
Submitted for Review and Updated to meet Rev 5.6 specifications for pricing.
April 14, 2006

Updated to reflect price updates in Dell hardware.

Third Printing, April 14, 2006

Dell believes that the information included in this document is accurate as of the publication date. The information in this document is subject to change without notice. Furthermore, Dell is not responsible for any errors contained within this document.

The pricing information given in this FDR is accurate as of the publication date, NOV 5,2003 and is generally available.

Benchmark results are highly dependent upon workload, specific application requirements, and system design and implementation. Relative system performance will vary as a result for these and other factors. Therefore, TPC Benchmark C should not be used as a substitute for a specific customer application benchmark when critical capacity planning and/or product evaluation decisions are contemplated.

All performance data contained in this report were obtained in a rigorously controlled environment. Actual performance experienced by a particular customer may vary due to differences in system layout and configuration, hardware and/or software revision levels, and background system activity. The content of this document is for informational purposes only.

Copyright 2003 Dell

All rights reserved. Permission is hereby granted to reproduce this document in whole or in part provided the copyright notice printed above is set forth in full text or on the title page of each item reproduced.

PowerEdge is a trademark of Dell.

Microsoft, Windows 2000 and SQL Server are registered trademarks of Microsoft Corporation.

TPC Benchmark, TPC-C and tpmC are registered trademarks of the Transaction Processing Performance Council.

Intel and Pentium are registered trademarks of Intel Corporation.

Other product names mentioned in this document may be trademarks and/or registered trademarks of their respective companies.

Abstract

Overview

This report documents the methodology and results of the TPC Benchmark™ C test conducted on Dell PowerEdge 6600. The tests were run in a client/server configuration using Eight PowerEdge 1500's as clients. The operating system used for the benchmark was Microsoft Windows .NET Enterprise Server on the database server and Microsoft Windows 2000 Server on the clients. The database was Microsoft SQL Server 2000 Enterprise Edition. Microsoft COM+ provided the database connection queues. All tests were done in compliance with Revision 5.0 of the Transaction Processing Council's TPC Benchmark™ C Standard Specification. Two standard TPC Benchmark™ C metrics, transactions per second (tpmC) and price per tpmC ($/tpmC) are reported and referred to in this document. The results from the tests are summarized below.

Hardware	Software	Total System Cost	tpmC	$/tpmC	Availability Date
Dell PowerEdge 6600	Microsoft Windows .NET Enterprise Server Windows 2000 Server SQL Server 2000 Enterprise Edition	$302,148	84,595.22	$3.58	Dec 30, 2003

Auditor

The results of the benchmark and test methodology used to produce the results were audited by Lorna Livingtree of Performance Metrics and have fully met the TPC-C rev 5.6 specifications.

Additional copies of this Full Disclosure Report can be obtained from either the Transaction Processing Performance Council or Dell at the following address:

Transaction Processing Performance Council (TPC)
c/o Adminstrator, TPC
Presidio of San Francisco
Bldg 572B Ruger St.
San Francisco, CA 94129-0920
Phone: (415) 561-6272, fax 415-561 6120
www.tpc.org

or

Dell
1 Dell Drive
Round Rock, TX 78682
Attention: Mike Molloy PhD.

PowerEdge 6600

Client/Server w/6 PE1600 Front Ends

TPC-C Rev 5.6
Report Date
Jun 30, 2003
Updated April 14, 2006

Total System Cost	TPC-C Throughput	Price/Performance	Availability Date
$302,148	**84,595.22 tpmC**	**$3.58/ tpmC**	Dec 30, 2003

Processors	Database Manager	OS	Other Software	Number of Users
4 x Intel Xeon™ MP Processors 4 Core, 8 Threads 2.8 GHz 2MB L2 Cache	Microsoft SQL Server 2000 Enterprise Edition SP3	Microsoft Windows .NET Enterprise Server	Windows 2000 Server w/ COM+ Internet Information Server 5.0 Microsoft Visual C++	67,200

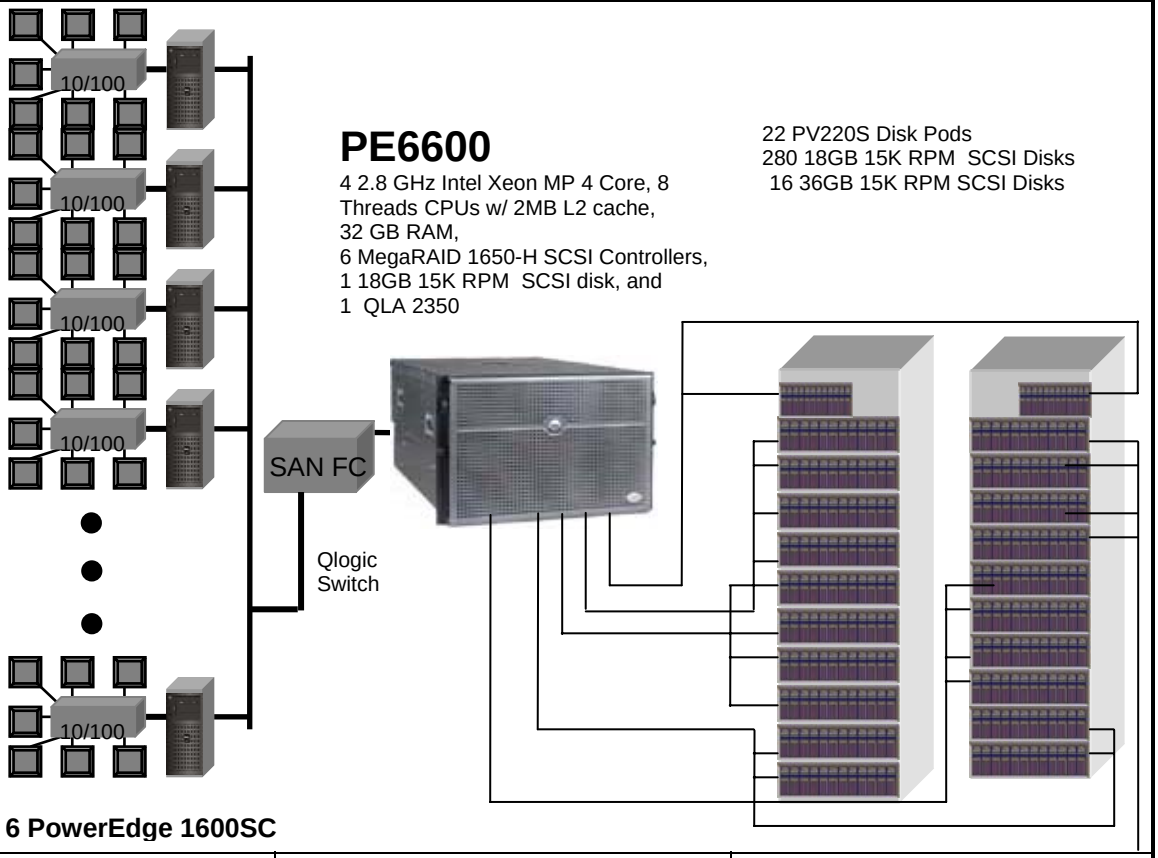

6 PowerEdge 1600SC

System Component	Server		Each Client	
Processors Cache	4	Intel Xeon MP 4 Core, 8 Threads @ 2.8GHz 2MB cache	1	Pentium® III w/ 512 KB L2 6 clients 6 Core, 12 Threads @ 1.8 GHz
Memory		32,768 MB		512 MB
Disk Controllers	6 1	MegaRAID 1650-H SCSI Adaptec On-Board	1	Adaptec On-Board
Disk Drives	280 16	18 GB SCSI 36 GB SCSI	1	18 GB
Total Storage		5,270.29 GB		36 GB
Other	1 1 1 1	QLA 2350 1000/100/10 BT CD-ROM DAT	1 1 1	QLA 2350 10/100MB BT NIC CD-ROM

Dell	PowerEdge 6600				TPC-C REV 5.6 EXECUTIVE SUMMARY PAGE 2 OF 2		
	Client/Server			Report Date: 21-Apr-03 Revised April 14, 2006			
Description	**Part Number**	**Third Party**		**Unit Price**	**Qty**	**Extended Price**	**3 yr. Maint. Price**
Server Hardware		**Brand**	**Pricing**				
Dell PowerEdge 6600	220-1828		1	7,626	1	7,626	1,299
Intel Xeon MP 2.0GHz / 1MB L2 - 4 processors	311-2348		1	14,999	1	14,999	-
32 GB,DDR, 16 x 2048MB DIMMS	311-2352		1	27,899	1	27,899	-
36 GB U160M SCSI 10K RPM Hard Drive	340-7919		1	249	1	249	-
Tape Backup Unit	340-7297		1	699	1	699	-
Dell 15" Monitor	320-0960		1	149	1	149	-
SANBlade FC-IV Adapter	A0107651	Qlogic	1	1,655	1	1,655	0
MegaRAID series Enterprise 1650-H SCSI RAID controller	A0171598	LSI	1	1,297	8	10,376	0
					Subtotal	63,652	1,299
PowerVault Disk Subsystem							
PV220S, U3 SCSI, PS, Rack mount	220-4476, etc.		1	2,756	22	60,632	13,200
SCSI Cables	310-0679		1	99	11	1,089	-
18 GB SCSI 15K RPM Hard Drive *	340-9472		1	249	280	69,720	-
36 GB SCSI 15K RPM Hard Drive *	340-8249		1	549	12	6,588	-
42U Rack	220-4492		1	964	2	1,928	-
					Subtotal	139,957	13,200
Server Software							
SQL Server 2000 Ent Edition, Per processor licensing **	810-00846	Microsoft	2	16,541	4	66,164	5,850
Windows .NET Enterprise Server 2003 **	P72-00264	Microsoft	2	2,399	1	2,399	-
					Subtotal	68,563	5,850
Client Hardware							
Dell PowerEdge 1600SC, 1.8 GHz Pentium III w/ 512KB L2*****	221-0916		1	1,467	6	8,802	4,788
512MB RAM, 4 DIMMs	311-1928		1	348	6	2,088	-
18GB,U160,10K, SCSI Hard Drive,	340-9450		1	249	6	1,494	-
SANBlade FC-IV Adapter	A0107651	Qlogic	1	1,655	6	9,930	-
Dell 15" Monitor	320-0960		1	149	6	894	-
					Subtotal	23,208	4,788
Client Software							
Windows 2000 Server, 5 Client Licenses **	C11-00821	Microsoft	2	738	6	4,428	-
Visual C++ .Net Standard **	254-00170	Microsoft	2	109	1	109	-
					Subtotal	4,537	-
User Connectivity							
SAN Fibre Channel 8-port switch	A0090822	Qlogic	1	4,925	1	4,925	2,800
SFP module	340-5916		1	175	7	1,225	
LC-LC cable	310-1625		1	75	7	525	
					Subtotal	6,675	2,800
					Other Discounts	(32,381)	-
					Total	**274,211**	**27,937**

Notes: * Maint. included in PowerVault 220S disk pod or PV650F/630F fibre channel disk pod
** All Microsoft maintenance is covered by the maintenance costs of Microsoft SQL Server
*** 10% or minimum 2 spares are added in place of onsite service (products have a five year return-to-vendor warranty) Pricing: 1 - Dell 2 - Microsoft
**** Discount based upon total system cost as purchased by a regular customer. Pricing may be verified by calling 1-800-BUY-DELL referencing quote numbers 107210195 as complex quotes.
***** Substitutes for PE1500SC. Meets TPC Substitution requirements

Three-Year Cost of Ownership: $302,148

tpmC Rating: 84595.22

$ / tpmC: 3.58

Audited by Lorna Livingtree, Performance Metrics Inc.

Prices used in TPC benchmarks reflect the actual prices a customer would pay for a one-time purchase of the stated components. Individually negotiated discounts are not permitted. Special prices based on assumptions about past or future purchases are not permitted. All discounts reflect standard pricing pol for the listed components. For complete details, see the pricing sections of the TPC benchmark specifications. If you find that the stated prices are not availa according to these items, please inform the TPC at pricing@tpc.org.

Copyright Dell

MQTh, computed Maximum Qualified Throughput 84595.22

Response Times (in seconds)	Average	90th	Max
- Neworder	0.26	0.36	5.29
- Payment	0.18	0.26	1.64
- Delivery (interactive portion)	0.11	0.12	1.02
- Stock-Level	0.75	1.03	3.01
- Order Status	0.20	0.27	5.39
- Delivery (deferred portion)	0.16	0.24	1.33
- Menu	0.11	0.12	1.25

Response time delay added for emulated components Menu 0.1
Resp 0.1

Transaction Mix, in percent of total transactions

- New-Order	44.85%
- Payment	43.03%
- Delivery	4.04%
- Stock-Level	4.04%
- Order Status	4.03%

Keying/Think Times (in seconds),	Min		Average		Max	
- New-Order	18.01	0.0	18.03	12.04	18.60	120.47
- Payment	3.01	0.0	3.03	12.04	3.64	120.64
- Delivery	2.01	0.0	2.03	5.05	2.52	50.46
- Stock-Level	2.01	0.0	2.03	5.05	2.48	50.45
- Order Status	2.01	0.0	2.03	10.04	2.51	100.43

Test Duration

- Ramp-up time	14 minutes
- Measurement interval	120 minutes
- Number of checkpoints	4
- Checkpoint interval	30 minutes
- Number of transactions (all types) completed in measurement interval	23,548,477

Copyright Dell

Table of Contents

ABSTRACT ..... **I**

OVERVIEW I
AUDITOR I

TABLE OF CONTENTS **3**

INTRODUCTION **7**

DOCUMENT STRUCTURE 7
BENCHMARK OVERVIEW 7
SYSTEM OVERVIEW 8

GENERAL ITEMS **9**

TEST SPONSOR 9
APPLICATION CODE AND DEFINITION STATEMENTS 9
PARAMETER SETTINGS 9
CONFIGURATION DIAGRAMS 10

CLAUSE 1 -- LOGICAL DATABASE DESIGN RELATED ITEMS .....

TABLE DEFINITIONS 13
PHYSICAL ORGANIZATION OF THE DATABASE 13
INSERT AND DELETE OPERATIONS 13
HORIZONTAL AND VERTICAL PARTITIONING 13
REPLICATION 13
TABLE ATTRIBUTES 13

CLAUSE 2 -- TRANSACTION AND TERMINAL PROFILES RELATED ITEMS **14**

RANDOM NUMBER GENERATION 14
SCREEN LAYOUT 14
TERMINAL VERIFICATION 14
INTELLIGENT TERMINALS 14
TRANSACTION PROFILES 14
TRANSACTION MIX 15
DEFERRED DELIVERY MECHANISM 15

CLAUSE 3 -- TRANSACTION AND SYSTEM PROPERTIES RELATED ITEMS **16**

ACID TESTS 16
Atomicity *16*
Consistency *16*
Isolation *16*
Durability *17*

CLAUSE 4 -- SCALING AND DATABASE POPULATION RELATED ITEMS **19**

TABLE CARDINALITY 19
CONSTANT VALUES 19
DATA DISTRIBUTION 20
PARTITION MAPPING 24
60 DAY SPACE CALCULATION 24

CLAUSE 5 -- PERFORMANCE METRICS AND RESPONSE TIME RELATED ITEMS **25**

MEASURED TPMC 25

Copyright Dell

RESPONSE TIMES....25
THINK TIMES & KEY TIMES....25
RESPONSE TIME DISTRIBUTION CURVES....26
NEW-ORDER RESPONSE TIME VS. THROUGHPUT GRAPH....28
NEW-ORDER THINK TIME DISTRIBUTION GRAPH....29
STEADY-STATE GRAPH....29
STEADY-STATE METHODOLOGY....30
WORK PERFORMED DURING STEADY STATE....30
REPRODUCIBILITY METHODOLOGY....28
MEASUREMENT INTERVAL....30
TRANSACTION MIX....31
OTHER METRICS....31
CHECKPOINTS....29

CLAUSE 6 -- SUT, DRIVER, AND COMMUNICATION DEFINITION RELATED ITEMS....33

RTE PARAMETERS....33
EMULATED COMPONENTS....33
BENCHMARKED AND TARGETED SYSTEM CONFIGURATION DIAGRAMS....33
NETWORK CONFIGURATION....33
NETWORK BANDWIDTH....33
OPERATOR INTERVENTION....34

CLAUSE 7 -- PRICING RELATED ITEMS....35

HARDWARE AND SOFTWARE LIST....35
AVAILABILITY DATE....35
MEASURED TPMC....35
COUNTRY SPECIFIC PRICING....35
USAGE PRICING....35
SYSTEM PRICING....36

CLAUSE 9 -- AUDIT RELATED ITEMS....37

AUDITOR....37
AVAILABILITY OF THE FULL DISCLOSURE REPORT....37
AUDITOR'S LETTER OF ATTESTATION....38

APPENDIX A - APPLICATION SOURCE CODE....41

TPCC.DLL ISAPI DLL SOURCE CODE....41
isapi_dll/src/tpcc.def....41
Isapi_dll/src/tpcc.h....41
isapi_dll/src/tpcc.rc....43
isapi_dll/src/tpcc.cpp....44
isapi_dll/src/resource.h....65
common/src/ReadRegistry.cpp....65
common/src/ReadRegistry.h....66
common/src/error.h....67
common/src/trans.h....69
common/src/txn_base.h....70
db_dblib_dll/src/tpcc_dblib.cpp....71
db_dblib_dll/src/tpcc_dblib.h....80
tm_com_dll/src/tpcc_com.cpp....81
tm_com_dll/src/tpcc_com.h....83
tpcc_com_all/src/methods.h....84
tpcc_com_all/src/resource.h....87
tpcc_com_all/src/tpcc_com_all.cpp....87

Copyright Dell

tpcc_com_all/src/tpcc_com_all.def *92*
tpcc_com_all/src/tpcc_com_all.h *92*
tpcc_com_all/src/tpcc_com_all.idl *93*
tpcc_com_all/src/tpcc_com_all.rc *94*
tpcc_com_all/src/tpcc_com_all.rgs *95*
tpcc_com_all/src/tpcc_com_all_i.c *95*
tpcc_com_all/src/tpcc_com_no.rgs *97*
tpcc_com_all/src/tpcc_com_os.rgs *97*
tpcc_com_all/src/tpcc_com_pay.rgs *97*
tpcc_com_all/src/tpcc_com_ps.h *98*
tpcc_com_all/src/tpcc_com_sl.rgs *100*
tpcc_com_ps/src/dlldata.c *100*
tpcc_com_ps/src/tpcc_com_ps.def *101*
tpcc_com_ps/src/tpcc_com_ps.h *101*
tpcc_com_ps/src/tpcc_com_ps.idl *103*
tpcc_com_ps/src/tpcc_com_ps_i.c *104*
tpcc_com_ps/src/tpcc_com_ps_p.c *105*
common/txnlog/include/rtetime.h *126*
common/txnlog/include/spinlock.h *126*
common/txnlog/include/txnlog.h *127*

APPENDIX B - DATABASE DESIGN 131

BUILD SCRIPTS 131
setup.cmd *131*
createdb.sql *132*
tables.sql *133*
idxcuscl.sql *134*
idxcusnc.sql *134*
idxdiscl.sql *135*
idxitmcl.sql *135*
idxnodcl.sql *135*
idxodlcl.sql *136*
idxordcl.sql *136*
idxstkcl.sql *136*
idxwarcl.sql *136*
dbopt1.sql *137*
dbopt2.sql *137*
dbopt3.sql *138*
backup.sql *138*
restore.sql *138*
STORED PROCEDURES 139
neword.sql *139*
payment.sql *141*
ordstat.sql *143*
delivery.sql *144*
stocklev.sql *145*
LOADER SOURCE CODE 145
tpcc.h *145*
tpccldr.c *147*
getargs.c *167*
random.c *168*
strings.c *170*
time.c *173*

APPENDIX C - TUNABLE PARAMETERS 174

Copyright Dell

SERVER CONFIGURATION PARAMETERS 174
Microsoft Windows .NET Enterprise Server Parameters 174
Microsoft Windows .NET Enterprise Server Configuration 174
Microsoft SQL Server Version 7.0 Startup Parameters 174
Microsoft SQL Server Stack Size 175
Mylex Device Drivers and Firmware 173
Mylex Registry Key 173
Qlogic Device Driver 173
Giganet Registry Key 173
Microsoft SQL Server 7.0 Configuration Parameters 175
Windows .NET Enterprise Server System Information Report For PE6400 176
CLIENT CONFIGURATION PARAMETERS 176
COM+ Settings 232
TPCC Application Registry Parameters 233
Microsoft Internet Information Server Registry Parameters 233
World Wide Web Service Registry Parameters 233
Microsoft Windows 2000 Server System Information Report for PE1300 235
RTE INPUT PARAMETERS 279
BenchCraft Configuration File 279

APPENDIX D – DISK STORAGE 291

60 DAY SPACE 289

APPENDIX E - PRICE QUOTATIONS 291

Copyright Dell

Introduction

Document Structure

The TPC Benchmark C Standard Specification Revision 5.6, written and approved by the Transaction Processing Performance Council (TPC), determines the contents of this report. The format of this report is based on this specification. Most sections of this report begin with the specification requirements printed in italic type, immediately followed by the detail in plain type of how Dell complied with the specification. Where extensive listings are required (such as listing of code), a note is included which references an appendix containing the listing.

Benchmark Overview

TPC Benchmark™ C (TPC-C) is an OLTP workload. It is a mixture of read-only and update intensive transactions that simulate the activities found in complex OLTP application environments. It does so by exercising a breadth of system components associated with such environments, which are characterized by:

- The simultaneous execution of multiple transaction types that span a breadth of complexity
- On-line and deferred transaction execution modes
- Multiple on-line terminal sessions
- Moderate system and application execution time
- Significant disk input/output
- Transaction integrity (ACID properties)
- Non-uniform distribution of data access through primary and secondary keys
- Databases consisting of many tables with a wide variety of sizes, attributes, and relationships
- Contention on data access and update

The performance metric reported by TPC-C is a "business throughput" measuring the number of orders processed per minute. Multiple transactions are used to simulate the business activity of processing an order, and each transaction is subject to a response time constraint.

The performance metric for this benchmark is expressed in transactions-per-minute-C (tpmC). To be compliant with the TPC-C standard, all references to tpmC results must include the tpmC rate, the associated price-per-tpmC, and the availability date of the priced configuration.

Although these specifications express implementation in terms of a relational data model with conventional locking scheme, the database may be implemented using any commercially available database management system (DBMS), database server, file system, or other data repository that provides a functionally equivalent implementation. The terms "table", "row", and "column" are used in this document only as examples of logical data structures.

TPC-C uses terminology and metrics that are similar to other benchmarks, originated by the TPC or others. Such similarity in terminology does not in any way imply that TPC-C results are comparable to other benchmarks. The only benchmark results comparable to TPC-C are other TPC-C results conformant with the same revision.

Despite the fact that this benchmark offers a rich environment that emulates many OLTP applications, this benchmark does not reflect the entire range of OLTP requirements. In addition, the extent to which a customer can achieve the results reported by a vendor is highly dependent on how closely TPC-C approximates the customer application. The relative performance of

Copyright Dell

systems derived from this benchmark does not necessarily hold for other workloads or environments. Extrapolations to any other environment are not recommended.

Benchmark results are highly dependent upon workload, specific application requirements, and systems design and implementation. Relative system performance will vary as a result of these and other factors. Therefore, TPC-C should not be used as a substitute for a specific customer application benchmarking when critical capacity planning and/or product evaluation decisions are contemplated.

System Overview

The hardware configuration used in this TPC-C test is a Dell PowerEdge 6600 server driven by six Dell PowerEdge 1500 clients. The clients and server are networked together via a SAN Fibre channel switch. Ten remote terminal emulator (RTE) systems (PowerEdge 2200's) emulate 67,200 users executing the standard TPC-C workload. The RTE's are connected to the six clients through 10/100BaseT switches. Each switch connects to one client machine at 100BaseT and to the RTE machines at 10BaseT, half duplex. Microsoft Windows .NET Enterprise Server was the operating system used on the server. Microsoft Windows 2000 Server was used on the clients. Microsoft SQL Server 2000 Enterprise Edition was the database on the server machine.

The PowerEdge 6600 motherboard uses the ServerWorks Grand Champion High End chipset and can hold up to four Pentium® 4 processors (2.8 GHz with 2MB L2 cache each). The system has 10 PCI-X 64-bit/100MHz I/O slots and a single legacy 32-bit/33MHz PCI slot. The measured configuration used 32Gbytes of DDR RAM, which was achieved by using 16 2048Mbyte DIMMs.

The PowerEdge 6600 has an integrated Adaptec AIC-7892 U160 SCSI controller to which was attached one 18GB disk drive containing the operating system. In addition, 6 MegaRAID Enterprise 1650-H 4-channel RAID controllers were installed in six PCI-X slots and connected to 22 PowerVault 220S disk pods, which can hold 14 disks each. Five of the controllers were connected to 20 PV220 disk pods enclosing a total of 280 18GB SCSI disks, containing database data. The last controller was connected two PV220 disk pods enclosing 16 36Gb SCSI drives mirrored using RAID10, configured for transaction log data. There were four empty PCI-X slots. The legacy 33MHz PCI slot was also empty.

Each client had a single 1.13GHz Pentium® III processor with 512 Kbytes of L2 cache. Each client had 512 Mbytes of RAM, one 18 GB hard disk, one intergrated Intel Ether Express Pro100+ PCI Ethernet adapter and one Qlogic SANBlade Fibre channel adapter. On each client the Intel Ethernet adapter was connected to the RTE machines through a 10/100 BaseT switch and the Qlogic Fibre channel adapter was connected to the Database Server through an 8 port SAN fibre switch. The six clients were driven through a total of 40 network segments. 1680 emulated users were run on each network segment for a total of 67,200 emulated users. The network segments between the switches and RTEs were fixed at 10 Mbit/sec, half duplex.

Copyright Dell

General Items

Test Sponsor

A statement identifying the sponsor of the Benchmark and any other companies who have participated.

Dell was the test sponsor of this TPC Benchmark™ C.

Application Code and Definition Statements

The application program must be disclosed. This includes, but is not limited to, the code implementing the five transactions and the terminal input/output functions.

The application consists of the Microsoft Benchcraft Remote Terminal Emulator (RTE) program emulating a set of users entering TPC-C transactions through web browsers, and communicating with Client machines running the Microsoft Internet Information Server (IIS) web server. The Client machines use the COM+ transaction monitor to communicate with the database server machine.

On each Client machine IIS loads a custom Microsoft Internet Information Server Application Programming Interface dynamic link library (ISAPI DLL) application program that communicates with the emulated web browsers through the HTTP protocol and with the database server through the COM+ transaction monitor and the Microsoft DBLIB interface. The application supplies fill-in screens to the user for each transaction, then parses the data in each request, and makes a call on SQL Server through the COM+ layer, which manages a set of DBLIB connections to the database server. The resulting data is passed back to the application where it is formatted into HTML and sent back to the user's browser. The Delivery transaction is handled directly from the application to the database without the use of COM+.

The web Client code is listed in Appendix A.

Parameter Settings

Settings must be provided for all customer-tunable parameters and options which have been changed from the default found in actual products; including but not limited to:

- *Database options*
- *Recover/commit options*
- *Consistency/locking options*
- *System parameter, application parameters, and configuration parameters.*

This requirement can be satisfied by providing a full listing of all parameters and options.

Appendix C contains all the database, Windows .NET Enterprise Server, Windows 2000 Server, and Internet Information Service parameters used in this benchmark.

Appendix D contains the 60 day space calculations.

Copyright Dell

Configuration Diagrams

Diagrams of both the measured and priced system must be provided, accompanied by a description of the differences.

Figures 1 and 2 respectively show the measured and priced full client/server configurations. The system under test (SUT) in the measured system was identical to what was priced.

Copyright Dell

Figure 1: Measured Configuration

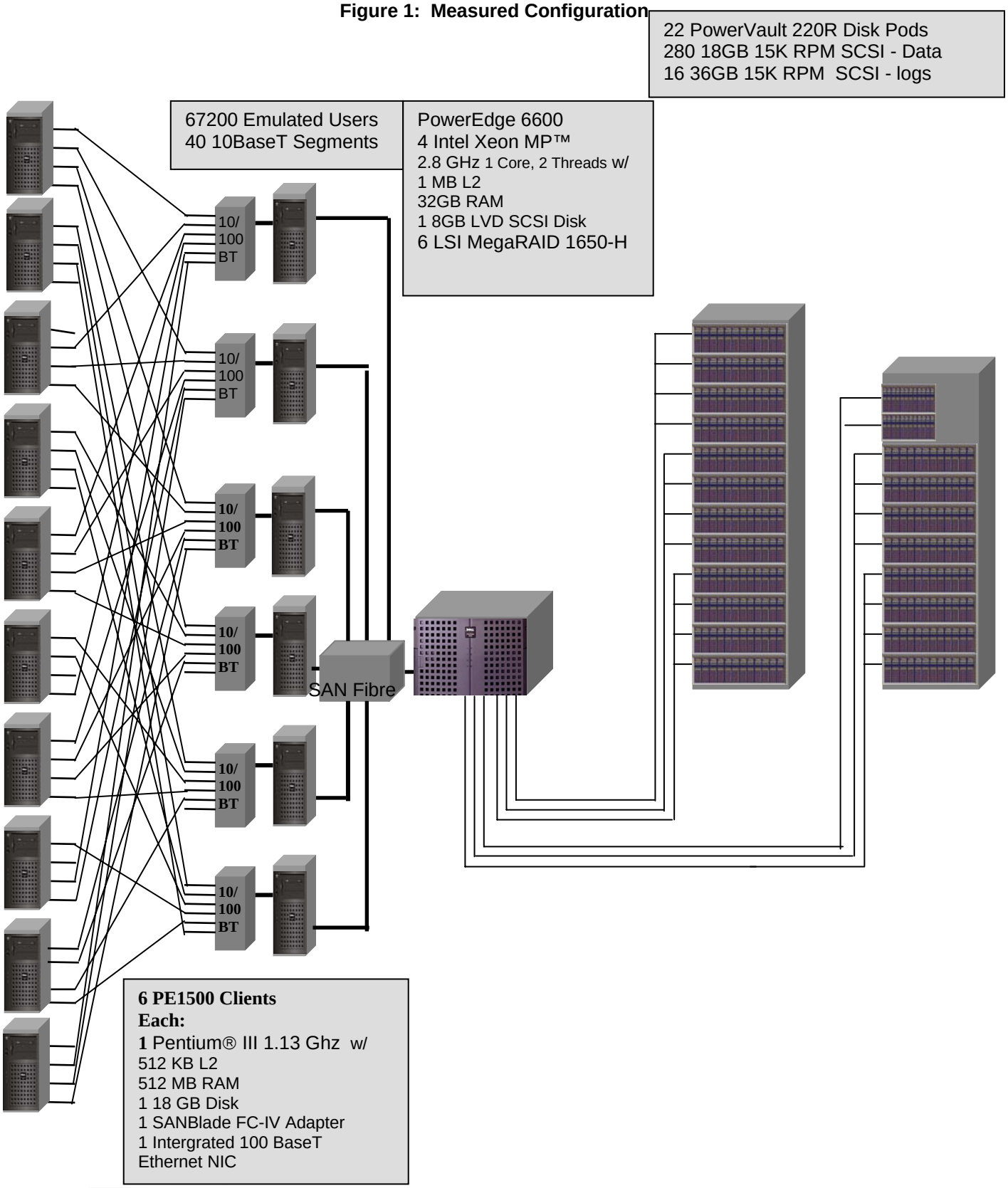

Copyright Dell

Figure 2: Priced Configuration

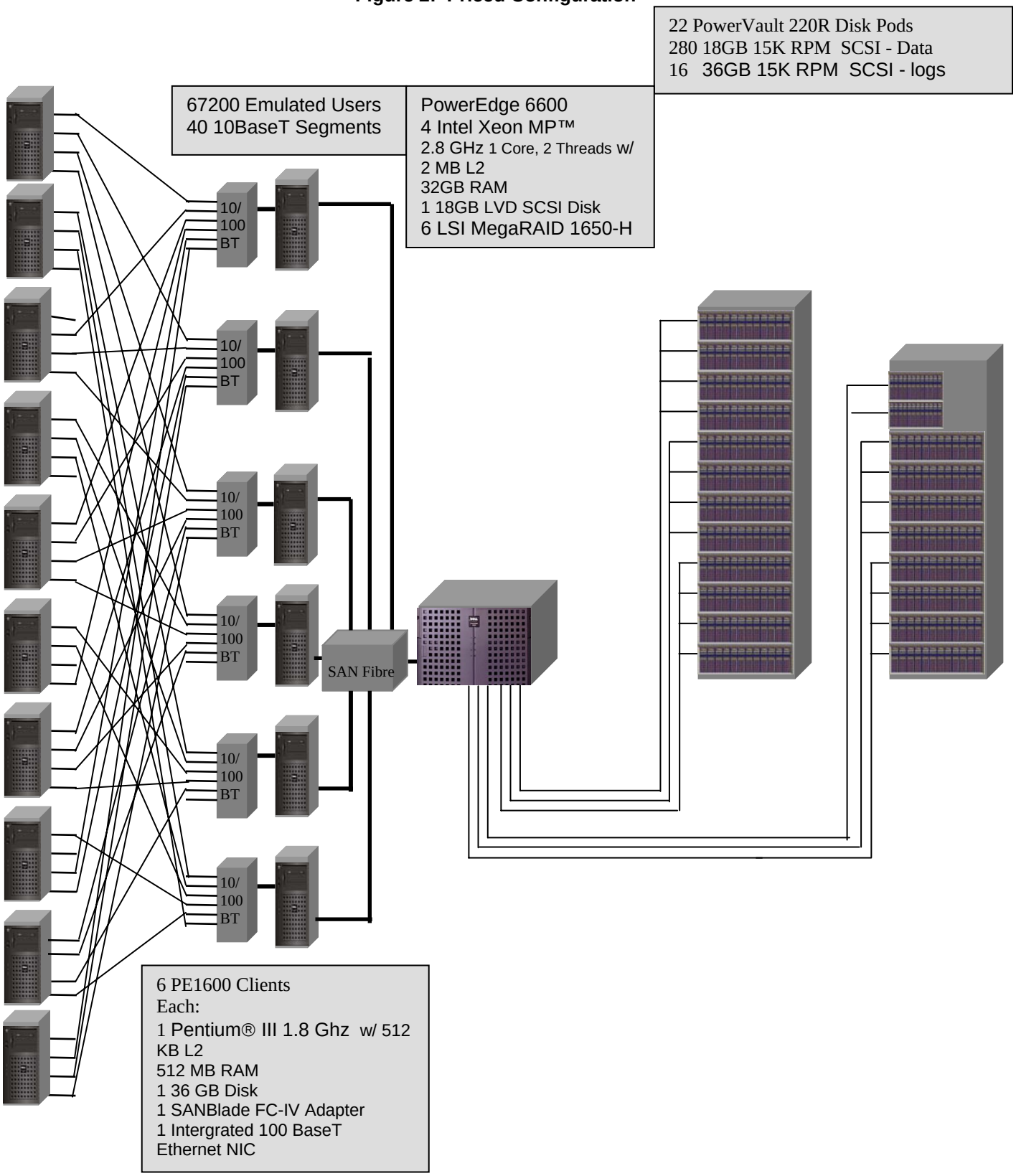

Copyright Dell

Clause 1 -- Logical Database Design Related Items

Table Definitions

Listings must be provided for all table definition statements and all other statements used to set-up the database. (8.1.2.1)

Appendix B contains the code used to define and load the database tables.

Physical Organization of the Database

The physical organization of tables and indices, within the database, must be disclosed. (8.1.2.2)

The measured configuration used 293 disk drives. The organization is shown in Table 5: Data Distribution.

Insert and Delete Operations

It must be ascertained that insert and/or delete operations to any of the tables can occur concurrently with the TPC-C transaction mix. Furthermore, any restriction in the SUT database implementation that precludes inserts beyond the limits defined in Clause 1.4.11 must be disclosed. This includes the maximum number of rows that can be inserted and the maximum key value for these new rows. (8.1.2.3)

Insert and delete functionality was fully operational during the benchmark.

Horizontal and Vertical Partitioning

While there are a few restrictions placed upon horizontal or vertical partitioning of tables and rows in the TPC-C benchmark (see Clause 1.6), any such partitioning must be disclosed. (8.1.2.4)

Partitioning was not used in this benchmark.

Replication

Replication of tables, if used, must be disclosed (see Clause 1.4.6). (8.1.2.5)

Replication was not used in this benchmark.

Table Attributes

Additional and/or duplicated attributes in any table must be disclosed along with a statement on the impact on performance (see Clause 1.4.7). (8.1.2.6)

No additional attributes were used in this benchmark.

Copyright Dell

Clause 2 -- Transaction and Terminal Profiles Related Items

Random Number Generation

The method of verification for the random number generation must be described. (8.1.3.1)

The random number generation was done internal to the Microsoft BenchCraft RTE program, which was audited independently.

Screen Layout

The actual layouts of the terminal input/output screens must be disclosed. (8.1.3.2)

The screen layouts are based on those in Clauses 2.4.3, 2.5.3, 2.6.3, 2.7.3, and 2.8.3 of the TPC-C Standard Specification. There are some very minor differences based on the fact that this is a web client implementation.

Terminal Verification

The method used to verify that the emulated terminals provide all the features described in Clause 2.2.2.4 must be explained. Although not specifically priced, the type and model of the terminals used for the demonstration in 8.1.3.3 must be disclosed and commercially available (including supporting software and maintenance). (8.1.3.3)

The terminal features were verified by allowing the auditor to manually execute each of the five transaction types, using Microsoft Internet Explorer version 3.0.

Intelligent Terminals

Any usage of presentation managers or intelligent terminals must be explained. (8.1.3.4)
***Comment 1**: The intent of this clause is to describe any special manipulations performed by a local terminal or workstation to off-load work from the SUT. This includes, but is not limited to: screen presentations, message bundling, and local storage of TPC-C rows.*
***Comment 2**: This disclosure also requires that all data manipulation functions performed by the local terminal to provide navigational aids for transaction(s) must also be described. Within this disclosure, the purpose of such additional function(s) must be explained.*

Application code involved in the manipulation of data was run on the client. Screen manipulation commands in the form of HTML were downloaded to the web browser, which handled input and output presentation graphics. A listing of this code is included in Appendix A. Microsoft Internet Information Service assisted in the processing and presentation of this data.

Transaction Profiles

The percentage of home and remote order-lines in the New-Order transactions must be disclosed. (8.1.3.5)
The percentage of New-Order transactions that were rolled back as a result of an unused item number must be disclosed. (8.1.3.6)
The number of items per orders entered by New-Order transactions must be disclosed. (8.1.3.7)
The percentage of home and remote Payment transactions must be disclosed. (8.1.3.8)
The percentage of Payment and Order-Status transactions that used non-primary key (C_LAST) access to the database must be disclosed. (8.1.3.9)
The percentage of Delivery transactions that were skipped as a result of an insufficient number of rows in the NEW-ORDER table must be disclosed. (8.1.3.10)

Copyright Dell

Table 1: Transaction Statistics

Transaction	Function	Value
New Order	Home Warehouse Items	99.00%
	Remote Warehouse Items	1.00%
	Rolled Back Transactions	1.00%
	Average Lines Per Order	10.00
Payment	Home Warehouse	85.00%
	Remote Warehouse	15.00%
	Non-Primary Key Access	60.01%
Order Status	Non-Primary Key Access	60.04%
Delivery	Skipped Transactions	0

Transaction Mix

The mix (i.e., percentages) of transaction types seen by the SUT must be disclosed. (8.1.3.11)

Table 2: Transaction mix

Transaction	Percentage
New Order	44.85%
Payment	43.03%
Order Status	4.03%
Delivery	4.04%
Stock Level	4.04%

Deferred Delivery Mechanism

The queuing mechanism used to defer the execution of the Delivery transaction must be disclosed. (8.1.3.12)

The application creates a semaphore-base thread pool consisting of a user-specified number of threads, which open DBLIB connections on the database. When a Delivery transaction is posted one of these threads makes the database call while the transaction's original thread returns control to the user. Upon completion the Delivery thread writes an entry in the Delivery log and returns to the thread pool.

The source code is listed in Appendix A.

Copyright Dell

Clause 3 -- Transaction and System Properties Related Items

ACID Tests

The results of the ACID tests must be disclosed along with a description of how the ACID requirements were met. This includes disclosing which case was followed for the execution of Isolation Test 7. (8.1.4.1)

All ACID property tests were successful. The executions are described below.

Atomicity

The system under test must guarantee that the database transactions are atomic; the system will either perform all individual operations on the data or will assure that no partially completed operations leave any effects on the data.

Completed Transactions

A row was selected in a script from the warehouse, district and customer tables, and the balances noted. A payment transaction was started with the same warehouse, district and customer identifiers and a known amount. The payment transaction was committed and the rows were verified to contain correctly updated balances.

Aborted Transactions

A row was selected in a script from the warehouse, district and customer tables, and the balances noted. A payment transaction was started with the same warehouse, district and customer identifiers and a known amount. The payment transaction was rolled back and the rows were verified to contain the original balances.

Consistency

Consistency is the property of the application that requires any execution of a database transaction to take the database from one consistent state to another, assuming that the database is initially in a consistent state.

Consistency conditions one through four were tested using a shell script to issue queries to the database. The results of the queries verified that the database was consistent for all four tests. A run was executed under full load lasting over ten (10) minutes and included a checkpoint. The shell script was executed again. The result of the same queries verified that the database remained consistent after the run.

Isolation

Sufficient conditions must be enabled at either the system or application level to ensure the required isolation defined above (clause 3.4.1) is obtained.

Isolation tests one through seven were executed using shell scripts to issue queries to the database. Each script included timestamps to demonstrate the concurrency of operations. The results of the queries were captured to files. The captured files were verified by the auditor to demonstrate the required isolation had been met.

In addition, the phantom tests and the stock level tests were executed and verified.

For Isolation test seven, case A was followed.

Copyright Dell

Durability

The tested system must guarantee durability: the ability to preserve the effects of committed transactions and insure database consistency after recovery from any one of the failures listed in Clause 3.5.3.

Durable Media Failure

Durability from media failure was demonstrated on a 700 warehouse database. The standard driving mechanism was used to generate the transaction load of 7000 users for the Loss of Data.

Loss of Data

Loss of data was demonstrated on the 700 Warehouse database. The standard driving mechanism was used to generate the transaction load of 7000 users for the test. To demonstrate recovery from a permanent failure of durable media containing TPC-C tables, the following steps were executed:

1. The 700 Warehouse database was used for this test.
2. The database was backed up using SQL Server backup facilities.
3. A sum of D_NEXT_O_ID was taken.
4. 6720 users were logged in to the database and ran transactions.
5. One disk drive in the data array was removed causing SQL Server errors.
6. The RTE was allowed to continue running. Completed transactions enroute from the clients were recorded. Error messages began appearing on the RTE screen.
7. The RTE was stopped.
8. SQL Server was stopped and restarted and a dump of the transaction log was taken.
9. SQL Server was stopped, Windows .NET was shutdown and the machine powered off.
10. The failed disk was replaced.
11. The machine was powered up, Windows .NET and SQL Server were started.
12. The TPC-C database was dropped and restored from backup.
13. The transaction log was restored and transactions rolled forward.
14. A new count of D_NEXT_O_ID was taken.
15. This number was compared with the number of new orders reported by the RTE.

Instantaneous Interruption and Loss of Memory/Loss of Log

Instantaneous Interruption and Loss of Memory were demonstrated on the full database with 6720 warehouses in a single test. The standard driving mechanism was used to generate the transaction load of 67,200 users for the test. To demonstrate recovery an instantaneous system interruption caused by powering off the Server, the following steps were executed:

1. The full database was used.
2. A sum of D_NEXT_O_ID was taken.
3. 67,200 users were logged in to the database and ran transactions.
4. The system was run is steady state for 5 minutes
5. One disk drive in the transaction log array was removed with no effect on Windows 2000 or SQL Server.
6. The system ran for an additional 5 minutes.
6. The Server was powered off by normal means, causing instantaneous interruption.

Copyright Dell

7. The RTE was allowed to continue running. Completed transactions enroute from the clients were recorded. Error messages began appearing on the RTE screen.
8. The RTE was stopped.
9. The server was powered on again and rebooted.
10. SQL Server was restarted and automatically recovered.
11. A new count of D_NEXT_O_ID was taken.
12. This number was compared with the number of new orders reported by the RTE

Copyright Dell

Clause 4 -- Scaling and Database Population Related Items

Table Cardinality

The cardinality (e.g., the number of rows) of each table, as it existed at the start of the benchmark run (see Clause 4.2), must be disclosed. If the database was over-scaled and inactive rows of the WAREHOUSE table were deleted (see Clause 4.2.2), the cardinality of the WAREHOUSE table as initially configured and the number of rows deleted must be disclosed. (8.1.5.1)

The database was originally built with 6000 warehouses. The performance run used 5800 warehouses and this is verified by runcheck

Table 3: Table Cardinality

Table	Cardinality as Benchmarked
Warehouse	7000
District	70000
Customer	210000000
History	210000000
NewOrder	63000000
Orders	210000000
OrderLine	2099998534
Item	100000
Stock	700000000
Deleted Warehouses	0

Constant Values

The following values were used as constant value inputs to the NURand function for this benchmark.

Table 4: Constant Values

Function	Constant C Value
C_LAST (Build)	123
C_LAST (Run)	208

Copyright Dell

Data Distribution

The distribution of tables and logs across all media must be explicitly depicted for the tested and priced systems. (8.1.5.2)

The Database was built using a total of 297 disks: 280 18GB for data, 16 36GB for log, and 1 18GB for OS and application software. The data drives were configured as hardware RAID 0. Logs were configured as hardware RAID 10. Mylex ExtremeRAID 2000 RAID Controllers were configured with 1 logical drives each. Each logical drive spanned 56 disk drives for data and 16 for logs. Each Windows .NET data drive contained 3 partitions: partition 1 for customer/stock, partition 2 for miscellaneous, and partition 3 for backup. Partitions 1 and 2 were RAW file systems and partition 3 was formatted NTFS. The details are shown in Table 5.

Table 5: Data Distribution

.NET Disk Administration	Adaptec 7899 Configuration					
Disk **0 17347MB**	On-Board Controller # **1**					
Partition	On-Board		Channels			
1	Internal	SCSI ID	0			
C: OS **NTFS** **17347 MB**		0	**A0-1**			
		1				
		2				
		3				

.NET Disk Administration	LSI MEGARAID 1650-HConfiguration					
Disk **1 295845MB**	Controller # **1**					
Partition	Slot# **2**		Channels			
1		SCSI ID	A	B	C	D
S:		0	**A1-1**	**A1-2**		
LOG		1	**A2-1**	**A2-2**		
Unknown		2	**A3-1**	**A3-2**		
295845MB		3	**A4-1**	**A4-2**		
		4	**A5-1**	**A5-2**		
		5	A6-1	A6-2		
		8	**A7-1**	**A7-2**		
		9	A8-1	A8-2		
		10				
		11				
		12				
		13				

Copyright Dell

.NET Disk Administration			LSI MEGARAID 1650-HConfiguration					
Disk **2 967567MB**			Controller # **2**					
Partition			Slot# **4**		Channels			
1	2	3		SCSI ID	A	B	C	D
E:	**F:**	**V:**		0	**A1-1**	**A2-1**	**A3-1**	**A4-1**
CS1	**MS1**	**Backup1**		1	**A1-2**	**A2-2**	**A3-2**	**A4-2**
Unknown	**Unknown**	**NTFS**		2	**A1-3**	**A2-3**	**A3-3**	**A4-3**
167936MB	**93184MB**	**409600MB**		3	**A1-4**	**A2-4**	**A3-4**	**A4-4**
				4	**A1-5**	**A2-5**	**A3-5**	**A4-5**
				5	**A1-6**	**A2-6**	**A3-6**	**A4-6**
				8	**A1-7**	**A2-7**	**A3-7**	**A4-7**
				9	**A1-8**	**A2-8**	**A3-8**	**A4-8**
				10	**A1-9**	**A2-9**	**A3-9**	**A4-9**
				11	**A1-10**	**A2-10**	**A3-10**	**A4-10**
				12	**A1-11**	**A2-11**	**A3-11**	**A4-11**
				13	**A1-12**	**A2-12**	**A3-12**	**A4-12**
				14	**A1-13**	**A2-13**	**A3-13**	**A4-13**
				15	**A1-14**	**A2-14**	**A3-14**	**A4-14**

.NET Disk Administration			LSI MEGARAID 1650-HConfiguration					
Disk **3 967567MB**			Controller # **3**					
Partition			Slot# **6**		Channels			
1	2	3		SCSI ID	A	B	C	D
G:	**H:**	**W:**		0	**A1-1**	**A2-1**	**A3-1**	**A4-1**
CS2	**MS2**	**Backup2**		1	**A1-2**	**A2-2**	**A3-2**	**A4-2**
Unknown	**Unknown**	**NTFS**		2	**A1-3**	**A2-3**	**A3-3**	**A4-3**
167936MB	**93184MB**	**409600MB**		3	**A1-4**	**A2-4**	**A3-4**	**A4-4**
				4	**A1-5**	**A2-5**	**A3-5**	**A4-5**
				5	**A1-6**	**A2-6**	**A3-6**	**A4-6**
				8	**A1-7**	**A2-7**	**A3-7**	**A4-7**
				9	**A1-8**	**A2-8**	**A3-8**	**A4-8**
				10	**A1-9**	**A2-9**	**A3-9**	**A4-9**
				11	**A1-10**	**A2-10**	**A3-10**	**A4-10**
				12	**A1-11**	**A2-11**	**A3-11**	**A4-11**
				13	**A1-12**	**A2-12**	**A3-12**	**A4-12**
				14	**A1-13**	**A2-13**	**A3-13**	**A4-13**
				15	**A1-14**	**A2-14**	**A3-14**	**A4-14**

Copyright Dell

.NET Disk Administration			LSI MEGARAID 1650-HConfiguration					
Disk **4 967567MB**			Controller # **4**					
Partition			Slot# **8**		Channels			
1	2	3		SCSI ID	A	B	C	D
I:	**J:**	**X:**		0	**A1-1**	**A2-1**	**A3-1**	**A4-1**
CS3	**MS3**	**Backup3**		1	**A1-2**	**A2-2**	**A3-2**	**A4-2**
Unknown	**Unknown**	**NTFS**		2	**A1-3**	**A2-3**	**A3-3**	**A4-3**
167936MB	**93184MB**	**409600MB**		3	**A1-4**	**A2-4**	**A3-4**	**A4-4**
				4	**A1-5**	**A2-5**	**A3-5**	**A4-5**
				5	**A1-6**	**A2-6**	**A3-6**	**A4-6**
				8	**A1-7**	**A2-7**	**A3-7**	**A4-7**
				9	**A1-8**	**A2-8**	**A3-8**	**A4-8**
				10	**A1-9**	**A2-9**	**A3-9**	**A4-9**
				11	**A1-10**	**A2-10**	**A3-10**	**A4-10**
				12	**A1-11**	**A2-11**	**A3-11**	**A4-11**
				13	**A1-12**	**A2-12**	**A3-12**	**A4-12**
				14	**A1-13**	**A2-13**	**A3-13**	**A4-13**
				15	**A1-14**	**A2-14**	**A3-14**	**A4-14**

.NET Disk Administration			LSI MEGARAID 1650-HConfiguration					
Disk **5 967567MB**			Controller # **5**					
Partition			Slot# **10**		Channels			
1	2	3		SCSI ID	A	B	C	D
K:	**L:**	**Y:**		0	**A1-1**	**A2-1**	**A3-1**	**A4-1**
CS4	**MS4**	**Backup4**		1	**A1-2**	**A2-2**	**A3-2**	**A4-2**
Unknown	**Unknown**	**NTFS**		2	**A1-3**	**A2-3**	**A3-3**	**A4-3**
167936MB	**93184MB**	**409600MB**		3	**A1-4**	**A2-4**	**A3-4**	**A4-4**
				4	**A1-5**	**A2-5**	**A3-5**	**A4-5**
				5	**A1-6**	**A2-6**	**A3-6**	**A4-6**
				8	**A1-7**	**A2-7**	**A3-7**	**A4-7**
				9	**A1-8**	**A2-8**	**A3-8**	**A4-8**
				10	**A1-9**	**A2-9**	**A3-9**	**A4-9**
				11	**A1-10**	**A2-10**	**A3-10**	**A4-10**
				12	**A1-11**	**A2-11**	**A3-11**	**A4-11**
				13	**A1-12**	**A2-12**	**A3-12**	**A4-12**
				14	**A1-13**	**A2-13**	**A3-13**	**A4-13**
				15	**A1-14**	**A2-14**	**A3-14**	**A4-14**

Copyright Dell

.NET Disk Administration			LSI MEGARAID 1650-HConfiguration					
Disk **6 967567MB**			Controller # **6**					
Partition			Slot# **11**		Channels			
1	2	3		SCSI ID	A	B	C	D
M:	**N:**	**Z:**		0	**A1-1**	**A2-1**	**A3-1**	**A4-1**
CS5	**MS5**	**Backup5**		1	**A1-2**	**A2-2**	**A3-2**	**A4-2**
Unknown	**Unknown**	**NTFS**		2	**A1-3**	**A2-3**	**A3-3**	**A4-3**
167936MB	**93184MB**	**409600MB**		3	**A1-4**	**A2-4**	**A3-4**	**A4-4**
				4	**A1-5**	**A2-5**	**A3-5**	**A4-5**
				5	**A1-6**	**A2-6**	**A3-6**	**A4-6**
				8	**A1-7**	**A2-7**	**A3-7**	**A4-7**
				9	**A1-8**	**A2-8**	**A3-8**	**A4-8**
				10	**A1-9**	**A2-9**	**A3-9**	**A4-9**
				11	**A1-10**	**A2-10**	**A3-10**	**A4-10**
				12	**A1-11**	**A2-11**	**A3-11**	**A4-11**
				13	**A1-12**	**A2-12**	**A3-12**	**A4-12**
				14	**A1-13**	**A2-13**	**A3-13**	**A4-13**
				15	**A1-14**	**A2-14**	**A3-14**	**A4-14**

Comment*: Detailed diagrams for layout of database files on disks can widely vary, and it is difficult to provide exact guideline suitable for all implementations. The intent is to provide sufficient detail to allow independent reconstruction of the test database. The two figures below are examples of database layout descriptions and are not intended to depict or imply any optimal layout for the TPC-C database.*

8.1.5.3 A statement must be provided that describes:

1. *The data model implemented by the DBMS used (e.g., relational, network, hierarchical)*
2. *The database interface (e.g., embedded, call level) and access language (e.g., SQL, DL/1, COBOL read/write) used to implement the TPC-C transactions. If more than one interface/access language is used to implement TPC-C, each interface/access language must be described and a list of which interface/access language is used with which transaction type must be disclosed.*

Microsoft SQL Server 2000 Enterprise Edition is a relational DBMS.

The interface used was Microsoft SQL Server stored procedures accessed with Remote Procedure Calls embedded in C code using the Microsoft DBLIB interface.

Copyright Dell

Partition Mapping

The mapping of database partitions/replications must be explicitly described.
***Comment**: The intent is to provide sufficient detail about partitioning and replication to allow independent reconstruction of the test database. (8.1.5.4)*
An description of a database partitioning scheme is presented below as an example. The nomenclature of this example was outlined using the CUSTOMER table (in Clause 8.1.2.1), and has been extended to use the ORDER and ORDER_LINE tables as well.

The database was not replicated.

60 day Space Calculation

Details of the 60 day space computations along with proof that the database is configured to sustain 8 hours of growth for the dynamic tables (Order, Order-Line, and History) must be disclosed (see Clause 4.2.3). (8.1.5.5)

To calculate the space required to sustain the database log for 8 hours of growth at steady state, the following steps were followed:

1. The current log space usage was determined by running *dbcc sqlperf(logspace)*
2. Transactions were run against the database with a full load of users.
3. The final log space usage was determined by running *dbcc sqlperf(logspace)*
4. The space used was calculated as the difference between the first and second query.
5. The number of NEW-ORDERS was verified from an RTE report covering the entire run.
6. The space used was divided by the number of NEW-ORDERS giving a spaceused per NEW-ORDER transaction.
7. The space used per transaction was multiplied by the measured tpmC rate times 480 minutes.

The results of the above steps yielded a requirement of 363.40 GB (including mirror) to sustain the log for 8 hours. Space available on the transaction log volume was 541.84GB (including mirror), indicating that enough storage was configured to sustain 8 hours of growth.

The same methodology was used to compute growth requirements for dynamic tables Order, Order-Line and History.

The details of the 60-day space requirement is shown in Appendix D.

Copyright Dell

Clause 5 -- Performance Metrics and Response Time Related Items

Measured TpmC

Measured tpmC must be reported. (8.1.6.1)

Measured TpmC	84,595.22
Price per TpmC	$3.58

Response Times

Ninetieth percentile, maximum and average response times must be reported for all transaction types as well as for the Menu response time. (8.1.6.2)

Table 6: Transaction Response Times

Transaction	Average	90%	Maximum
New Order	0.26	0.36	5.29
Payment	0.18	0.26	1.64
Interactive Delivery	0.11	0.12	1.02
Stock Level	0.75	1.03	3.01
Order Status	0.20	0.27	5.39
Deferred Delivery	0.16	0.24	1.33
Menu	0.11	0.12	1.25

Think Times & Key Times

The minimum, the average, and the maximum keying and think times must be reported for each transaction type. (8.1.6.3)

Table 7: Transaction Key Times

Transaction	Minimum	Average	Maximum
New Order	18.01	18.03	18.60
Payment	3.01	3.03	3.64
Order Status	2.01	2.03	2.51
Delivery	2.01	2.03	2.52
Stock Level	2.01	2.03	2.48

Table 8: Transaction Think Times

Transaction	Minimum	Average	Maximum
New Order	0.00	12.04	120.47
Payment	0.00	12.04	120.64
Order Status	0.00	10.04	100.43
Delivery	0.00	5.05	50.46
Stock Level	0.00	5.05	50.45

Copyright Dell

Response Time Distribution Curves

Response Time frequency distribution curves (see Clause 5.6.1) must be reported for each transaction type. (8.1.6.4)

Figure 2: Payment Response Time Distribution

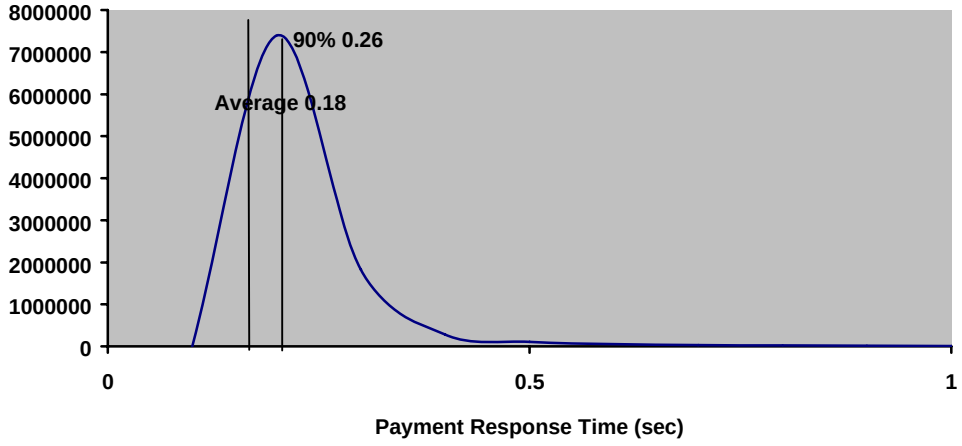

Figure 3: New Order Response Time Distribution

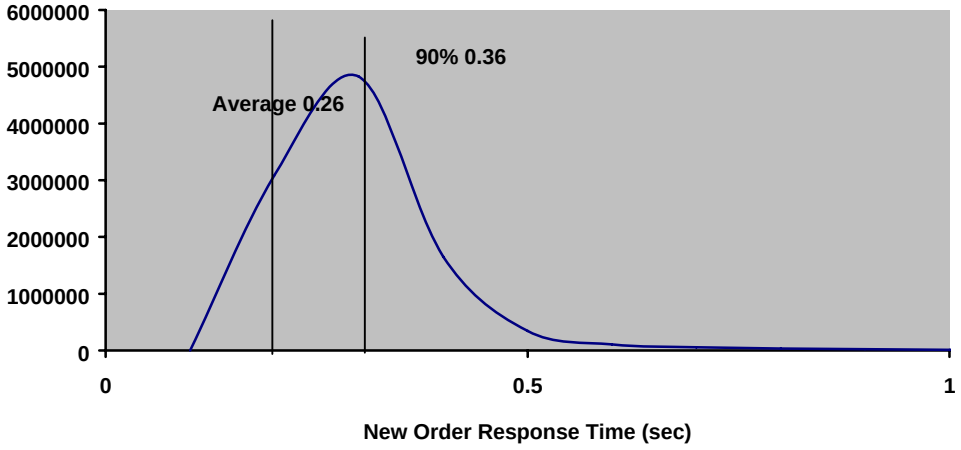

Copyright Dell

Figure 4: Order Status Response Time Distribution

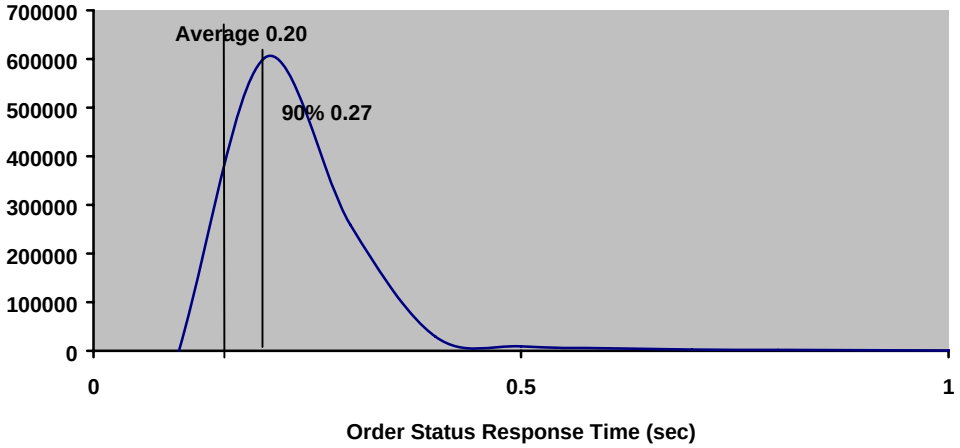

Figure 5: Delivery Response Time Distribution

Copyright Dell

Figure 6: Stock Level Response Time Distribution

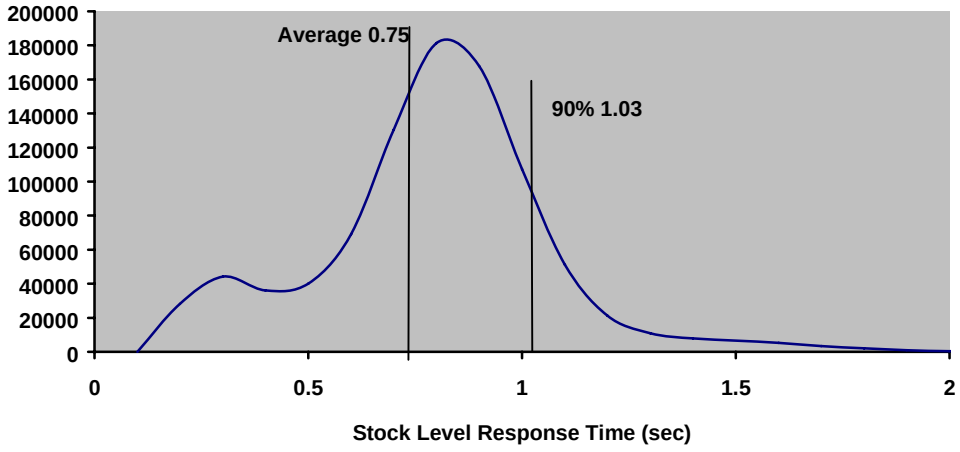

New-Order Response Time vs. Throughput Graph

The performance curve for response times versus throughput (see Clause 5.6.2) must be reported for the New-Order transaction. (8.1.6.5)

Figure 8: New Order Response Time vs. Throughput

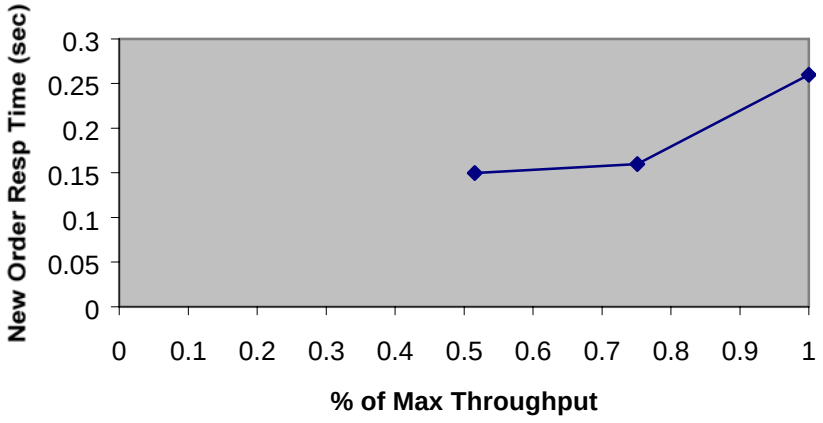

Copyright Dell

New-Order Think Time Distribution Graph

Think Time frequency distribution curves (see Clause 5.6.3) must be reported for the New-Order transaction (8.1.6.6)

Figure 9: New Order Think Time Distribution

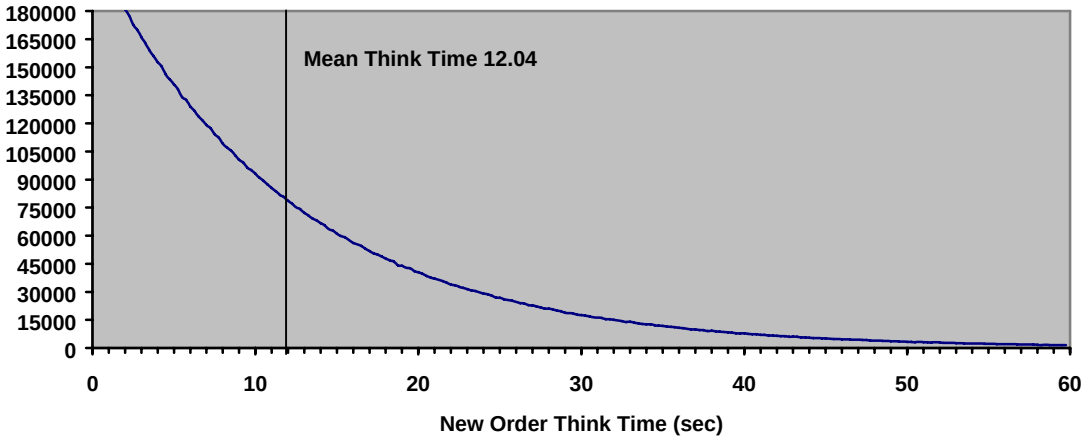

Steady-State Graph

A graph of throughput versus elapsed time (see Clause 5.6.5) must be reported for the New-Order transaction. (8.1.6.8)

Figure 10: New Order Throughput vs. Time

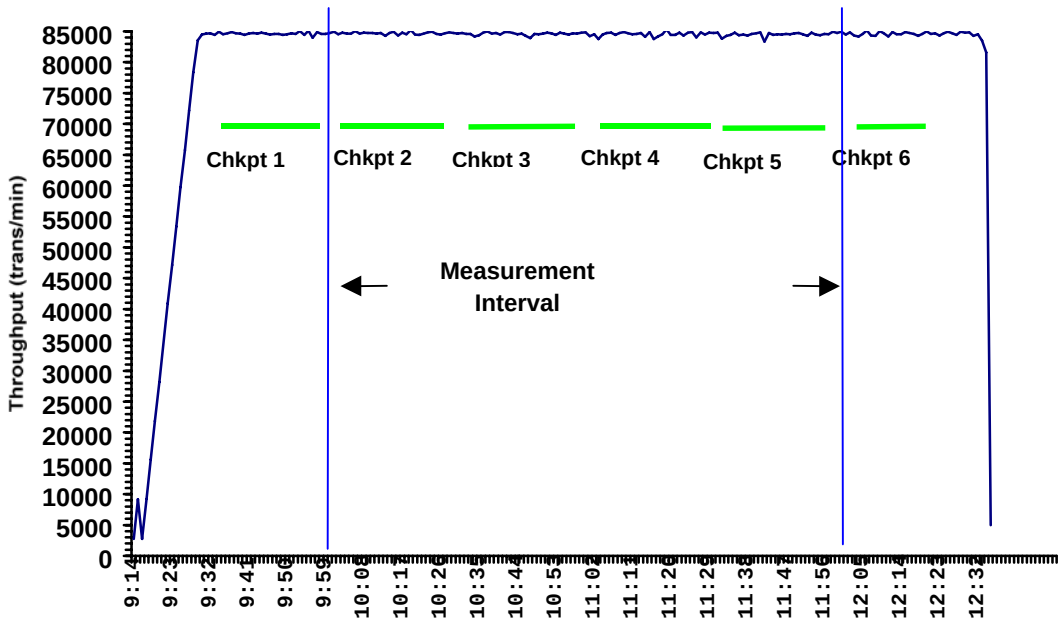

Copyright Dell

Steady-State Methodology

The method used to determine that the SUT had reached a steady state prior to commencing the measurement interval (see Clause 5.5) must be described. (8.1.6.9)

Steady state was determined using real time monitor utilities from both the operating system and the RTE. Steady state was further confirmed by the throughput data collected during the run and graphed in Figure 10.

Work Performed During Steady State

A description of how the work normally performed during a sustained test (for example checkpointing, writing redo/undo log records, etc.), actually occurred during the measurement interval must be reported. (8.1.6.10)

The RTE generated the required input data to choose a transaction from the menu. This data was timestamped. The menu response for the requested transaction was verified and timestamped in the RTE log files.

The RTE generated the required input data for the chosen transaction. It waited to complete the minimum required key time before transmitting the HTTP request to the client. The transmission was timestamped. The return of the screen with the required response data was timestamped. The difference between these two timestamps was the response time for that transaction and was logged in the RTE log.

The RTE then waited the required think time interval before repeating the process starting at selecting another transaction from the menu.

The RTE transmissions were sent to the web-based application program running on the client machines through Ethernet LANs. These web clients managed the emulated web browser interface as well as all requests to the database on the server. The applications communicated with the database server over another Ethernet LAN using the COM+ transaction monitor and Microsoft SQL Server DBLIB library and RPC calls.

To perform checkpoints at specific intervals, we set SQL Server *recovery interval* to 104 and wrote a script to schedule multiple checkpoints at specific intervals. By setting the TRACE FLAG #3502, SQL Server logged the checkpoint beginning and ending time in the ERRORLOG file. The script included a wait time between each checkpoint equal to the measurement interval, which was 30 minutes. The checkpoint script was started manually after the RTE had all users logged in and sending transactions.

At each checkpoint, Microsoft SQL Server wrote to disk all memory pages that had been updated but not yet physically written to disk. Upon completion of the checkpoint, Microsoft SQL Server wrote a special record to the recovery log to indicate that all disk operations had been satisfied to this point.

Measurement Interval

A statement of the duration of the measurement interval for the reported Maximum Qualified Throughput (tpmC) must be included. (8.1.6.12)

The measurement interval was 7200 minutes.

Copyright Dell

Measurement Period Duration and Checkpoint Duration

The start time and duration in seconds of at least the four (4) longest checkpoints during the measurement interval must be disclosed (see clause 5.5.2.2(2)) (8.1.6.11)
A statement of the duration of the measurement interval for the reported Maximum Qualified Throughput (tpmC) must be included. (8.1.6.12)

	Start	**End**	**Duration**
Measurement Interval	09:59:10	11:59:10	7,200
1st Checkpoint	10:00:38	10:26:34	1556
2nd Checkpoint	10:30:29	10:56:29	1560
3rd Checkpoint	11:00:23	11:26:23	1560
4th Checkpoint	11:30:19	11:56:18	1559

Transaction Mix

8.1.6.13 The method of regulation of the transaction mix (e.g., card decks or weighted random distribution) must be described. If weighted distribution is used and the RTE adjusts the weights associated with each transaction type, the maximum adjustments to the weight from the initial value must be disclosed. (8.1.6.13)

The RTE was given a weighted random distribution that was not adjusted during the run.

The percentage of the total mix for each transaction type must be disclosed. (8.1.6.14)

Table 9: Transaction Mix

Transaction	Percentage
New Order	44.85%
Payment	43.03%
Order Status	4.03%
Delivery	4.04%
Stock Level	4.04%

Other Metrics

The percentage of New-Order transactions rolled back as a result of invalid item number must be disclosed. (8.1.6.15)
The average number of order-lines entered per New-Order transaction must be disclosed. (8.1.6.16)
The percentage of remote order-lines entered per New-Order transaction must be disclosed. (8.1.6.17)
The percentage of remote Payment transactions must be disclosed. (8.1.6.18)
The percentage of customer selections by customer last name in the Payment and Order-Status

Copyright Dell

transactions must be disclosed. (8.1.6.19)
The percentage of Delivery transactions skipped due to there being fewer than necessary orders in the New-Order table must be disclosed. (8.1.6.20)

Table 10: Transaction Statistics

Transaction	Function	Value
New Order	Home Warehouse Items	99.00%
	Remote Warehouse Items	1.00%
	Rolled Back Transactions	1.00%
	Average Lines Per Order	10.00
Payment	Home Warehouse	85.00%
	Remote Warehouse	15.00%
	Non-Primary Key Access	60.01%
Order Status	Non-Primary Key Access	60.04%
Delivery	Skipped Transactions	0

Copyright Dell

Clause 6 -- SUT, Driver, and Communication Definition Related Items

RTE Parameters

The RTE input parameters, code fragments, functions, etc. used to generate each transaction input field must be disclosed. (8.1.7.1)
Comment: *The intent is to demonstrate the RTE was configured to generate transaction input data as specified in Clause 2.*

The RTE input parameters are listed in Appendix C - Tunable Parameters.

Emulated Components

It must be demonstrated that the functionality and performance of the components being emulated in the Driver System are equivalent to that of the priced system. The results of the test described in Clause 6.6.3.4 must be disclosed. (8.1.7.2)

No components were emulated.

Benchmarked and Targeted System Configuration Diagrams

A complete functional diagram of both the benchmark configuration and the configuration of the proposed (target) system must be disclosed. A detailed list of all software and hardware functionality being performed on the Driver System, and its interface to the SUT must be disclosed (see Clause 6.6.3.6). (8.1.7.3)

The driver system performed transaction data generation and communication to the client through the standard web browser (HTTP) protocol. It also captured and timestamped the SUT output data for post-processing of the reported metrics. No other functionality was included on the driver system.

Figures 1 & 2 of this report contain detailed diagrams of both the benchmark configuration and the priced configuration.

Network Configuration

The network configurations of both the tested services and the proposed (target) services which are being represented and a thorough explanation of exactly which parts of the proposed configuration are being replaced with the Driver System must be disclosed (see Clause 6.6.4). (8.1.7.4)

The network configurations of the benchmarked and priced configurations were identical.

Network Bandwidth

The bandwidth of the network(s) used in the tested/priced configuration must be disclosed. (8.1.7.5)

The bandwidth of the tested and priced networks were as follows:

- 10 BaseT (10 Mbit/sec) network segments between the RTE/Emulated Users and the switch.
- 100 BaseT (100 Mbit/sec) between the Clients and Server.

Copyright Dell

Operator Intervention

If the configuration requires operator intervention (see Clause 6.6.6), the mechanism and the frequency of this intervention must be disclosed. (8.1.7.6)

This configuration does not require any operator intervention to sustain eight hours of the reported throughput.

Copyright Dell

Clause 7 -- Pricing Related Items

Hardware and Software List

A detailed list of hardware and software used in the priced system must be reported. Each separately orderable item must have vendor part number, description, and release/revision level, and either general availability status or committed delivery date. If package-pricing is used, vendor part number of the package and a description uniquely identifying each of the components of the package must be disclosed.

Pricing source(s) and effective date(s) of price(s) must also be reported. (8.1.8.1)

The total 5-year price of the entire configuration must be reported, including: hardware, software, and maintenance charges. Separate component pricing is recommended. The basis of all discounts used must be disclosed. (8.1.8.2)

The details of the hardware and software are reported in the front of this report as part of the executive summary. All third party quotations are included at the end of this report as Appendix E.

Availability Date

The committed delivery date for general availability (availability date) of products used in the price calculations must be reported. When the priced system includes products with different availability dates, the reported availability date for the priced system must be the date at which all components are committed to be available. (8.1.8.3)

Hardware Availability Date: Dec 30, 2003
Software Availability Date: Dec 30, 2003

Measured TpmC

A statement of the measured tpmC, as well as the respective calculations for 5-year pricing, price/performance (price/tpmC), and the availability date must be included. (8.1.8.4)

Maximum Qualified Throughput: 84,595.22 tpmC
Price Performance Metric: $3.58

Country Specific Pricing

Additional Clause 7 related items may be included in the Full Disclosure Report for each country specific priced configuration. Country specific pricing is subject to Clause 7.1.7. (8.1.8.5)

This system is priced for the United States of America.

Usage Pricing

For any usage pricing, the sponsor must disclose (8.1.8.6):

- *Usage level at which the component was priced.*
- *A statement of the company policy allowing such pricing.*

***Comment**: Usage pricing may include, but is not limited to, the operating system and database management software.*

Copyright Dell

The component pricing based on usage is shown below:

- 6 Microsoft Windows 2000 Server Licenses
- 1 Microsoft Windows .NET Enterprise Server License
- 1 Microsoft SQL Server 2000 Enterprise Edition License.
- 1 Microsoft Visual C++ 32 bit Edition
- 3 Year Support for Hardware Components.

System Pricing

System pricing should include subtotals for the following components: Server Hardware, Server Software, Client Hardware, Client Software, and Network Components used for terminal connection (see Clause 7.2.2.3). Clause 6.1 describes the Server and Client components. An example of the standard pricing sheet is shown in Appendix B. (8.1.8.7)
System pricing must include line item indication where non-sponsoring companies' brands are used. System pricing must also include line item indication of third party pricing. See example in Appendix B. (8.1.8.8)

The details of the hardware and software are reported in the front of this report as part of the executive summary. All third party quotations are included at the end of this report as Appendix E.

Copyright Dell

Clause 9 -- Audit Related Items

Auditor

The auditor's name, address, phone number, and a copy of the auditor's attestation letter indicating compliance must be included in the Full Disclosure Report. (8.1.9.1)
A review of the pricing model is required to ensure that all components required are priced (see Clause 9.2.8). The auditor is not required to review the final Full Disclosure Report or the final pricing prior to issuing the attestations letter. (8.1.9.2)

This TPC-C benchmark has been audited by Lorna Livingtree of Performance Metrics.

Availability of the Full Disclosure Report

The Full Disclosure Report must be readily available to the public at a reasonable charge, similar to the charges for similar documents by the test sponsor. The report must be made available when results are made public. In order to use the phrase "TPC Benchmark™ C", the Full Disclosure Report must have been submitted to the TPC Administrator as well as written permission obtained to distribute same.

Requests for this TPC Benchmark C Full Disclosure Report should be sent to:

Transaction Processing Performance Council
c/o Adminstrator, TPC
Presidio of San Francisco
Bldg 572B Ruger St.
San Francisco, CA 94129-0920
Phone: (415) 561-6272, fax 415-561 6120
www.tpc.org

or:

Dell
One Dell Way
Round Rock, TX 78682
Attention: Mike Molloy

Copyright Dell

Auditor's Letter of Attestation

May 29, 2003

Mike Molloy
Senior Manager, Server Performance Analysis
Dell Computer Corporation
One Dell Way
Round Rock, TX 78682

I have verified by remote the TPC Benchmark™ C for the following configuration:

Platform:	PowerEdge 6600
Database Manager:	Microsoft SQL Server 2000 Enterprise Edition
Operating System:	Microsoft Windows Server 2003 Enterprise Server
Transaction Monitor:	Microsoft COM+

Servers: PowerEdge 6600				
CPU's	Memory	Disks (total)	90% Response	TpmC
4 Intel Xeon @ 2.8 Ghz	Main: 32 GB Cache: 1024 KB	280 @ 18GB 1 OS @ 18 GB 16 @ 36 GB	0.36	84,595.22
6 Clients: PowerEdge 1600SC				
1 Pentium III @ 1.13 Ghz	Main: 512 MB Cache: 512 KB	1 @ 18 GB	Na	Na

In my opinion, these performance results were produced in compliance with the TPC requirements for the benchmark. The following attributes of the benchmark were given special attention:

- The transactions were correctly implemented.
- The database files were properly sized and populated.
- The database was properly scaled with 7000 warehouses of which 6,720 were active during the measured interval.
- The ACID properties were successfully demonstrated.
- Input data was generated according to the specified percentages.
- Eight hours of mirrored log space was present on the tested system.
- Eight hours of growth space for the dynamic tables was present on the tested system.
- The data for the 60 day space calculation was verified.
- The controller cache was disabled on the log controller.
- The steady state portion of the test was 120 minutes.
- One checkpoint was taken before the measured interval.

Copyright Dell

- Four checkpoints were taken during the measured interval.
- The system pricing was checked for major components and maintenance.
- Third party quotes were verified for compliance.

Auditor Notes:

The client machines used contained 1.13GHz processors. These clients are no longer orderable with that processor. The same machine with an upgraded processor of 1.8GHz was substituted in the price sheet. This substitution complies with all substitution requirements.

Sincerely,

Lorna Livingtree

Lorna Livingtree
Auditor

Copyright Dell

Appendix A - Application Source Code

tpcc.dll ISAPI DLL Source Code

isapi_dll/src/tpcc.def

```
LIBRARY TPCC.DLL

EXPORTS

          GetExtensionVersion @1
          HttpExtensionProc   @2
          TerminateExtension  @3
```

Isapi_dll/src/tpcc.h

```
/*        FILE:               TPCC.H
 *                                  Microsoft TPC-C Kit Ver. 4.20.000
 *                                  Copyright Microsoft, 1999
 *              All Rights Reserved
 *
 *                                  Version 4.10.000 audited by Richard Gimarc,
Performance Metrics, 3/17/99
 *
 *        PURPOSE:  Header file for ISAPI TPCC.DLL, defines structures and functions used
in the isapi tpcc.dll.
 *
 */

//VERSION RESOURCE DEFINES
#define _APS_NEXT_RESOURCE_VALUE                                    101
#define _APS_NEXT_COMMAND_VALUE                                               40001
#define _APS_NEXT_CONTROL_VALUE                                               1000
#define _APS_NEXT_SYMED_VALUE                                       101

#define TP_MAX_RETRIES
          50


//note that the welcome form must be processed first as terminal ids assigned here, once
the
//terminal id is assigned then the forms can be processed in any order.
#define WELCOME_FORM                                                          1
          //beginning form no term id assigned, form id
#define MAIN_MENU_FORM                                                        2
          //term id assigned main menu form id
#define NEW_ORDER_FORM                                                        3
          //new order form id
#define PAYMENT_FORM                                                          4
          //payment form id
#define DELIVERY_FORM                                                         5
          //delivery form id
#define ORDER_STATUS_FORM                                           6
          //order status id
#define STOCK_LEVEL_FORM                                            7
          //stock level form id

//This macro is used to prevent the compiler error unused formal parameter
#define UNUSEDPARAM(x) (x = x)


//This structure defines the data necessary to keep distinct for each terminal or client
connection.
typedef struct _CLIENTDATA
{
          int                         iNextFree;
          //index of next free element or -1 if this entry in use.
          int                         w_id;
          //warehouse id assigned at welcome form
          int                         d_id;
          //district id assigned at welcome form

          int                         iSyncId;
          //syncronization id
          int                         iTickCount;
          //time of last access;

          CTPCC_BASE          *pTxn;

} CLIENTDATA, *PCLIENTDATA;


//This structure is used to define the operational interface for terminal id support
typedef struct _TERM
{
          int                         iNumEntries;
          //total allocated terminal array entries
          int                         iFreeList;
                    //next available terminal array element or -1 if none
          int                         iMasterSyncId;
          //syncronization id
          CLIENTDATA          *pClientData;
          //pointer to allocated client data
} TERM;

typedef TERM *PTERM;
          //pointer to terminal structure type


          enum WEBERROR
          {
                    NO_ERR,
                    ERR_COMMAND_UNDEFINED,
                    ERR_D_ID_INVALID,
                    ERR_DELIVERY_CARRIER_ID_RANGE,
                    ERR_DELIVERY_CARRIER_INVALID,
                    ERR_DELIVERY_MISSING_OCD_KEY,
```

```
                    ERR_DELIVERY_THREAD_FAILED,
                    ERR_GETPROCADDR_FAILED,
                    ERR_HTML_ILL_FORMED,
                    ERR_INVALID_SYNC_CONNECTION,
                    ERR_INVALID_TERMID,
                    ERR_LOADDLL_FAILED,
                    ERR_MAX_CONNECTIONS_EXCEEDED,
                    ERR_MEM_ALLOC_FAILED,
                    ERR_MISSING_REGISTRY_ENTRIES,
                    ERR_NEWORDER_CUSTOMER_INVALID,
                    ERR_NEWORDER_CUSTOMER_KEY,
                    ERR_NEWORDER_DISTRICT_INVALID,
                    ERR_NEWORDER_FORM_MISSING_DID,
                    ERR_NEWORDER_ITEMID_INVALID,
                    ERR_NEWORDER_ITEMID_RANGE,
                    ERR_NEWORDER_ITEMID_WITHOUT_SUPPW,
                    ERR_NEWORDER_MISSING_IID_KEY,
                    ERR_NEWORDER_MISSING_QTY_KEY,
                    ERR_NEWORDER_MISSING_SUPPW_KEY,
                    ERR_NEWORDER_NOITEMS_ENTERED,
                    ERR_NEWORDER_QTY_INVALID,
                    ERR_NEWORDER_QTY_RANGE,
                    ERR_NEWORDER_QTY_WITHOUT_SUPPW,
                    ERR_NEWORDER_SUPPW_INVALID,
                    ERR_NO_SERVER_SPECIFIED,
                    ERR_ORDERSTATUS_CID_AND_CLT,
                    ERR_ORDERSTATUS_CID_INVALID,
                    ERR_ORDERSTATUS_CLT_RANGE,
                    ERR_ORDERSTATUS_DID_INVALID,
                    ERR_ORDERSTATUS_MISSING_CID_CLT,
                    ERR_ORDERSTATUS_MISSING_CID_KEY,
                    ERR_ORDERSTATUS_MISSING_CLT_KEY,
                    ERR_ORDERSTATUS_MISSING_DID_KEY,
                    ERR_PAYMENT_CDI_INVALID,
                    ERR_PAYMENT_CID_AND_CLT,
                    ERR_PAYMENT_CUSTOMER_INVALID,
                    ERR_PAYMENT_CWI_INVALID,
                    ERR_PAYMENT_DISTRICT_INVALID,
                    ERR_PAYMENT_HAM_INVALID,
                    ERR_PAYMENT_HAM_RANGE,
                    ERR_PAYMENT_LAST_NAME_TO_LONG,
                    ERR_PAYMENT_MISSING_CDI_KEY,
                    ERR_PAYMENT_MISSING_CID_CLT,
                    ERR_PAYMENT_MISSING_CID_KEY,
                    ERR_PAYMENT_MISSING_CLT,
                    ERR_PAYMENT_MISSING_CLT_KEY,
                    ERR_PAYMENT_MISSING_CWI_KEY,
                    ERR_PAYMENT_MISSING_DID_KEY,
                    ERR_PAYMENT_MISSING_HAM_KEY,
                    ERR_STOCKLEVEL_MISSING_THRESHOLD_KEY,
                    ERR_STOCKLEVEL_THRESHOLD_INVALID,
                    ERR_STOCKLEVEL_THRESHOLD_RANGE,
                    ERR_VERSION_MISMATCH,
                    ERR_W_ID_INVALID
          };

class CWEBCLNT_ERR : public CBaseErr
{
          public:

                    CWEBCLNT_ERR(WEBERROR Err)
                    {
                              m_Error = Err;
                              m_szTextDetail = NULL;
                              m_SystemErr = 0;
                              m_szErrorText = NULL;
                    };

                    CWEBCLNT_ERR(WEBERROR Err, char *szTextDetail, DWORD dwSystemErr)
                    {
                              m_Error = Err;
                              m_szTextDetail = new char[strlen(szTextDetail)+1];
                              strcpy( m_szTextDetail, szTextDetail );
                              m_SystemErr = dwSystemErr;
                              m_szErrorText = NULL;
                    };

                    ~CWEBCLNT_ERR()
                    {
                              if (m_szTextDetail != NULL)
                                        delete [] m_szTextDetail;
                              if (m_szErrorText != NULL)
                                        delete [] m_szErrorText;
                    };

                    WEBERROR  m_Error;
                    char                *m_szTextDetail;    //
                    char                *m_szErrorText;
                    DWORD               m_SystemErr;

                    int ErrorType() {return ERR_TYPE_WEBDLL;};
                    int ErrorNum() {return m_Error;};
                    char *ErrorText();

};

//These constants have already been defined in engstut.h, but since we do
//not want to include it in the delisrv executable
#define   TXN_EVENT_START               2
#define   TXN_EVENT_STOP                4
#define TXN_EVENT_WARNING     6                   //used to record a warning into the log

//function prototypes

BOOL APIENTRY DllMain(HANDLE hModule, DWORD ul_reason_for_call, LPVOID lpReserved);
void WriteMessageToEventLog(LPTSTR lpszMsg);
void ProcessQueryString(EXTENSION_CONTROL_BLOCK *pECB, int *pCmd, int *pFormId, int
*pTermId, int *pSyncId);
void WelcomeForm(EXTENSION_CONTROL_BLOCK *pECB, char *szBuffer);
void SubmitCmd(EXTENSION_CONTROL_BLOCK *pECB, char *szBuffer);
void BeginCmd(EXTENSION_CONTROL_BLOCK *pECB, int iFormId, int iTermId);
void ProcessCmd(EXTENSION_CONTROL_BLOCK *pECB, int iFormId, int iTermId);
void StatsCmd(EXTENSION_CONTROL_BLOCK *pECB, char *szBuffer);
void ErrorMessage(EXTENSION_CONTROL_BLOCK *pECB, int iError, int iErrorType, char *szMsg,
int iTermId);
void GetKeyValue(char **pQueryString, char *pKey, char *pValue, int iMax, WEBERROR err);
int  GetIntKeyValue(char **pQueryString, char *pKey, WEBERROR NoKeyErr, WEBERROR
NotIntErr);
void TermInit(void);
void TermDeleteAll(void);
int  TermAdd(void);
void TermDelete(int id);
void ErrorForm(EXTENSION_CONTROL_BLOCK *pECB, int iType, int iErrorNum, int iTermId, int
iSyncId, char *szErrorText, char *szBuffer );
void MakeMainMenuForm(int iTermId, int iSyncId, char *szForm);
```

```
void MakeStockLevelForm(int iTermId, STOCK_LEVEL_DATA *pStockLevelData, BOOL bInput, char
*szForm);
void MakeNewOrderForm(int iTermId, NEW_ORDER_DATA *pNewOrderData, BOOL bInput, char
*szForm);
void MakePaymentForm(int iTermId, PAYMENT_DATA *pPaymentData, BOOL bInput, char *szForm);
void MakeOrderStatusForm(int iTermId, ORDER_STATUS_DATA *pOrderStatusData, BOOL bInput,
char *szForm);
void MakeDeliveryForm(int iTermId, DELIVERY_DATA *pDeliveryData, BOOL bInput, char
*szForm);
void ProcessNewOrderForm(EXTENSION_CONTROL_BLOCK  *pECB, int iTermId, char *szBuffer);
void ProcessPaymentForm(EXTENSION_CONTROL_BLOCK *pECB, int iTermId, char *szBuffer);
void ProcessOrderStatusForm(EXTENSION_CONTROL_BLOCK *pECB, int iTermId, char *szBuffer);
void ProcessDeliveryForm(EXTENSION_CONTROL_BLOCK *pECB, int iTermId, char *szBuffer);
void ProcessStockLevelForm(EXTENSION_CONTROL_BLOCK *pECB, int iTermId, char *szBuffer);
void GetNewOrderData(LPSTR lpszQueryString, NEW_ORDER_DATA *pNewOrderData);
void GetPaymentData(LPSTR lpszQueryString, PAYMENT_DATA *pPaymentData);
void GetOrderStatusData(LPSTR lpszQueryString, ORDER_STATUS_DATA *pOrderStatusData);
BOOL PostDeliveryInfo(short w_id, short o_carrier_id);
BOOL IsNumeric(char *ptr);
BOOL IsDecimal(char *ptr);
void DeliveryWorkerThread(void *ptr);
```

isapi_dll/src/tpcc.rc

```
//Microsoft Developer Studio generated resource script.
//
#include "resource.h"

#define APSTUDIO_READONLY_SYMBOLS
/////////////////////////////////////////////////////////////////////////////
//
// Generated from the TEXTINCLUDE 2 resource.
//
#include "afxres.h"

/////////////////////////////////////////////////////////////////////////////
#undef APSTUDIO_READONLY_SYMBOLS

/////////////////////////////////////////////////////////////////////////////
// English (U.S.) resources

#if !defined(AFX_RESOURCE_DLL) || defined(AFX_TARG_ENU)
#ifdef _WIN32
LANGUAGE LANG_ENGLISH, SUBLANG_ENGLISH_US
#pragma code_page(1252)
#endif //_WIN32

#ifndef _MAC
/////////////////////////////////////////////////////////////////////////////
//
// Version
//

VS_VERSION_INFO VERSIONINFO
 FILEVERSION 0,4,0,0
 PRODUCTVERSION 0,4,0,0
 FILEFLAGSMASK 0x3fL
#ifdef _DEBUG
 FILEFLAGS 0x1L
#else
 FILEFLAGS 0x0L
#endif
 FILEOS 0x40004L
 FILETYPE 0x2L
 FILESUBTYPE 0x0L
BEGIN
    BLOCK "StringFileInfo"
    BEGIN
        BLOCK "040904b0"
        BEGIN
            VALUE "Comments", "TPC-C HTML DLL Server (DBLIB)\0"
            VALUE "CompanyName", "Microsoft\0"
            VALUE "FileDescription", "TPC-C HTML DLL Server (DBLIB)\0"
            VALUE "FileVersion", "0, 4, 0, 0\0"
            VALUE "InternalName", "tpcc\0"
            VALUE "LegalCopyright", "Copyright © 1997\0"
            VALUE "OriginalFilename", "tpcc.dll\0"
            VALUE "ProductName", "Microsoft tpcc\0"
            VALUE "ProductVersion", "0, 4, 0, 0\0"
        END
    END
    BLOCK "VarFileInfo"
    BEGIN
        VALUE "Translation", 0x409, 1200
    END
END

#endif    // !_MAC


#ifdef APSTUDIO_INVOKED
/////////////////////////////////////////////////////////////////////////////
//
// TEXTINCLUDE
//

1 TEXTINCLUDE DISCARDABLE
BEGIN
    "resource.h\0"
END

2 TEXTINCLUDE DISCARDABLE
BEGIN
    "#include ""afxres.h""\r\n"
    "\0"
END

3 TEXTINCLUDE DISCARDABLE
BEGIN
    "\r\n"
    "\0"
END

#endif    // APSTUDIO_INVOKED


/////////////////////////////////////////////////////////////////////////////
//
// Dialog
//

IDD_DIALOG1 DIALOG DISCARDABLE  0, 0, 186, 95
```

```
STYLE DS_MODALFRAME | WS_POPUP | WS_CAPTION | WS_SYSMENU
CAPTION "Dialog"
FONT 8, "MS Sans Serif"
BEGIN
    DEFPUSHBUTTON   "OK",IDOK,129,7,50,14
    PUSHBUTTON      "Cancel",IDCANCEL,129,24,50,14
END


/////////////////////////////////////////////////////////////////////////////
//
// DESIGNINFO
//

#ifdef APSTUDIO_INVOKED
GUIDELINES DESIGNINFO DISCARDABLE
BEGIN
    IDD_DIALOG1, DIALOG
    BEGIN
        LEFTMARGIN, 7
        RIGHTMARGIN, 179
        TOPMARGIN, 7
        BOTTOMMARGIN, 88
    END
END
#endif    // APSTUDIO_INVOKED

#endif    // English (U.S.) resources
/////////////////////////////////////////////////////////////////////////////



#ifndef APSTUDIO_INVOKED
/////////////////////////////////////////////////////////////////////////////
//
// Generated from the TEXTINCLUDE 3 resource.
//


/////////////////////////////////////////////////////////////////////////////
#endif    // not APSTUDIO_INVOKED
```

isapi_dll/src/tpcc.cpp

```
/*        FILE:               TPCC.C
 *                                    Microsoft TPC-C Kit Ver. 4.20.000
 *                                    Copyright Microsoft, 1999
 *              All Rights Reserved
 *
 *                                    Version 4.10.000 audited by Richard Gimarc,
Performance Metrics, 3/17/99
 *
 *        PURPOSE:  Main module for TPCC.DLL which is an ISAPI service dll.
 *        Contact:  Charles Levine (clevine@microsoft.com)
 *
 *  Change history:
 *                  4.20.000 - reworked error handling; added options for COM and Encina
txn monitors
 */

#include <windows.h>
#include <process.h>
#include <tchar.h>
#include <stdio.h>
#include <stdarg.h>
#include <malloc.h>
#include <stdlib.h>
#include <string.h>
#include <time.h>
#include <sys\timeb.h>
#include <io.h>
#include <assert.h>

#include <sqltypes.h>

#ifdef ICECAP
#include <icapexp.h>
#endif

#include "..\..\common\src\trans.h"               //tpckit transaction header contains
definations of structures specific to TPC-C
#include "..\..\common\src\error.h"
#include "..\..\common\src\txn_base.h"
#include "..\..\common\src\ReadRegistry.h"

#include "..\..\common\txnlog\include\rtetime.h"
#include "..\..\common\txnlog\include\spinlock.h"
#include "..\..\common\txnlog\include\txnlog.h"

// Database layer includes
#include "..\..\db_dblib_dll\src\tpcc_dblib.h"              // DBLIB implementation of
TPC-C txns
#include "..\..\db_odbc_dll\src\tpcc_odbc.h"                // ODBC implementation of
TPC-C txns

// Txn monitor layer includes
#include "..\..\tm_com_dll\src\tpcc_com.h"                          // COM Services
implementation on TPC-C txns
#include "..\..\tm_tuxedo_dll\src\tpcc_tux.h"               // interface to Tuxedo
libraries
#include "..\..\tm_encina_dll\src\tpcc_enc.h"               // interface to Encina
libraries

#include "httpext.h"                                        //ISAPI DLL information
header
#include "tpcc.h"                                           //this dlls specific
structure, value e.t. header.


#define   LEN_ERR_STRING      256

// defines for Make<Txn>Form calls to distinguish input and output flavors
#define   OUTPUT_FORM         0
#define INPUT_FORM  1

char                szMyComputerName[MAX_COMPUTERNAME_LENGTH+1];

//Terminal client id structure
TERM      Term = { 0, 0, 0, NULL };

// The WEBCLIENT_VERSION string specifies the version level of this web client interface.
```

```
// The RTE must be synchronized with the interface level on login, otherwise the login
// will fail.  This is a sanity check to catch problems resulting from mismatched
versions
// of the RTE and web client.
#define WEBCLIENT_VERSION "410"

static    CRITICAL_SECTION              TermCriticalSection;

static  HINSTANCE hLibInstanceTm = NULL;
static  HINSTANCE hLibInstanceDb = NULL;

TYPE_CTPCC_DBLIB    *pCTPCC_DBLIB_new;
TYPE_CTPCC_ODBC               *pCTPCC_ODBC_new;
TYPE_CTPCC_TUXEDO   *pCTPCC_TUXEDO_new;
TYPE_CTPCC_ENCINA   *pCTPCC_ENCINA_new;
TYPE_CTPCC_ENCINA   *pCTPCC_ENCINA_post_init;
TYPE_CTPCC_COM                *pCTPCC_COM_new;

// For deferred Delivery txns:

CTxnLog                                         *txnDelilog = NULL;
          //used to log delivery transaction information

HANDLE                                          hWorkerSemaphore    =
INVALID_HANDLE_VALUE;
HANDLE                                          hDoneEvent
          = INVALID_HANDLE_VALUE;
HANDLE                                          *pDeliHandles                = NULL;

// configuration settings from registry
TPCCREGISTRYDATA              Reg;


DWORD                                           dwNumDeliveryThreads = 4;
CRITICAL_SECTION              DelBuffCriticalSection;                 //critical section
for delivery transactions cache
DELIVERY_TRANSACTION          *pDelBuff                     = NULL;
DWORD                                           dwDelBuffSize                = 100;
          // size of circular buffer for delivery txns
DWORD                                           dwDelBuffFreeCount;
          // number of buffers free
DWORD                                           dwDelBuffBusyIndex  = 0;
          // index position of entry waiting to be delivered
DWORD                                           dwDelBuffFreeIndex  = 0;
          // index position of unused entry

#include "..\..\common\src\ReadRegistry.cpp"

/* FUNCTION: DllMain
 *
 * PURPOSE:         This function is the entry point for the DLL.  This implementation is
based on the
 *                  fact that DLL_PROCESS_ATTACH is only called from the inet
service once.
 *
 * ARGUMENTS:       HANDLE    hModule                                 module handle
 *                            DWORD     ul_reason_for_call  reason for call
 *                            LPVOID    lpReserved
          reserved for future use
 *
 * RETURNS:                   BOOL      FALSE                                   errors
occured in initialization
 *                                                                     TRUE
          DLL successfully initialized
 */

BOOL APIENTRY DllMain(HANDLE hModule, DWORD ul_reason_for_call, LPVOID lpReserved)
{
          DWORD  i;
          char szEvent[LEN_ERR_STRING] = "\0";
          char szLogFile[128];
          char szDllName[128];

// debugging....
// DebugBreak();

          try
          {
                    switch( ul_reason_for_call )
                    {
                              case DLL_PROCESS_ATTACH:
                                        {
                                                  DWORD dwSize =
MAX_COMPUTERNAME_LENGTH+1;
                                                  GetComputerName(szMyComputerName,
&dwSize);
                                                  szMyComputerName[dwSize] = 0;
                                        }

                                        DisableThreadLibraryCalls((HMODULE)hModule);
                                        InitializeCriticalSection(&TermCriticalSection);

                                        if ( ReadTPCCRegistrySettings( &Reg ) )
                                                  throw new CWEBCLNT_ERR(
ERR_MISSING_REGISTRY_ENTRIES );

                                        dwDelBuffSize = min( Reg.dwMaxPendingDeliveries,
10000 );  // min with 10000 as a sanity constraint
                                        dwNumDeliveryThreads = min(
Reg.dwNumberOfDeliveryThreads, 100 );  // min with 100 as a sanity constraint

                                        TermInit();

                                        // load DLL for txn monitor
                                        if (Reg.eTxnMon == TUXEDO)
                                        {
                                                  strcpy( szDllName, Reg.szPath );
                                                  strcat( szDllName, "tpcc_tuxedo.dll");
                                                  hLibInstanceTm = LoadLibrary( szDllName
);
                                                  if (hLibInstanceTm == NULL)
                                                            throw new CWEBCLNT_ERR(
ERR_LOADDLL_FAILED, szDllName, GetLastError() );

                                                  // get function pointer to wrapper for
class constructor
                                                  pCTPCC_TUXEDO_new =
(TYPE_CTPCC_TUXEDO*) GetProcAddress(hLibInstanceTm,"CTPCC_TUXEDO_new");
                                                  if (pCTPCC_TUXEDO_new == NULL)
                                                            throw new CWEBCLNT_ERR(
ERR_GETPROCADDR_FAILED, szDllName, GetLastError() );
                                        }
                                        else if (Reg.eTxnMon == ENCINA)
                                        {
                                                  strcpy( szDllName, Reg.szPath );
```

```
                                                strcat( szDllName, "tpcc_encina.dll");
                                                hLibInstanceTm = LoadLibrary( szDllName
);
                                                if (hLibInstanceTm == NULL)
                                                        throw new CWEBCLNT_ERR(
ERR_LOADDLL_FAILED, szDllName, GetLastError() );
                                                // get function pointer to wrapper for
class constructor
                                                pCTPCC_ENCINA_new =
(TYPE_CTPCC_ENCINA*) GetProcAddress(hLibInstanceTm,"CTPCC_ENCINA_new");
                                                pCTPCC_ENCINA_post_init =
(TYPE_CTPCC_ENCINA*) GetProcAddress(hLibInstanceTm,"CTPCC_ENCINA_post_init");
                                                if (pCTPCC_ENCINA_new == NULL)
                                                        throw new CWEBCLNT_ERR(
ERR_GETPROCADDR_FAILED, szDllName, GetLastError() );
                                        }
                                        else if (Reg.eTxnMon == COM)
                                        {
                                                strcpy( szDllName, Reg.szPath );
                                                strcat( szDllName, "tpcc_com.dll");
                                                hLibInstanceTm = LoadLibrary( szDllName
);
                                                if (hLibInstanceTm == NULL)
                                                        throw new CWEBCLNT_ERR(
ERR_LOADDLL_FAILED, szDllName, GetLastError() );

                                                // get function pointer to wrapper for
class constructor
                                                pCTPCC_COM_new = (TYPE_CTPCC_COM*)
GetProcAddress(hLibInstanceTm,"CTPCC_COM_new");
                                                if (pCTPCC_COM_new == NULL)
                                                        throw new CWEBCLNT_ERR(
ERR_GETPROCADDR_FAILED, szDllName, GetLastError() );
                                        }

                                        // load DLL for database connection
                                        if ((Reg.eTxnMon == None) ||
(dwNumDeliveryThreads > 0))
                                        {
                                                if (Reg.eDB_Protocol == DBLIB)
                                                {
                                                        strcpy( szDllName, Reg.szPath
);
                                                        strcat( szDllName,
"tpcc_dblib.dll");
                                                        hLibInstanceDb = LoadLibrary(
szDllName );
                                                        if (hLibInstanceDb == NULL)
                                                                throw new
CWEBCLNT_ERR( ERR_LOADDLL_FAILED, szDllName, GetLastError() );

                                                        // get function pointer to
wrapper for class constructor
                                                        pCTPCC_DBLIB_new =
(TYPE_CTPCC_DBLIB*) GetProcAddress(hLibInstanceDb,"CTPCC_DBLIB_new");
                                                        if (pCTPCC_DBLIB_new == NULL)
                                                                throw new
CWEBCLNT_ERR( ERR_GETPROCADDR_FAILED, szDllName, GetLastError() );
                                                }
                                                else if (Reg.eDB_Protocol == ODBC)
                                                {
                                                        strcpy( szDllName, Reg.szPath
);
                                                        strcat( szDllName,
"tpcc_odbc.dll");
                                                        hLibInstanceDb = LoadLibrary(
szDllName );
                                                        if (hLibInstanceDb == NULL)
                                                                throw new
CWEBCLNT_ERR( ERR_LOADDLL_FAILED, szDllName, GetLastError() );

                                                        // get function pointer to
wrapper for class constructor
                                                        pCTPCC_ODBC_new =
(TYPE_CTPCC_ODBC*) GetProcAddress(hLibInstanceDb,"CTPCC_ODBC_new");
                                                        if (pCTPCC_ODBC_new == NULL)
                                                                throw new
CWEBCLNT_ERR( ERR_GETPROCADDR_FAILED, szDllName, GetLastError() );
                                                }
                                        }

                                        if (dwNumDeliveryThreads)
                                        {
                                                // for deferred delivery txns:
                                                hDoneEvent = CreateEvent( NULL, TRUE /*
manual reset */, FALSE /* initially not signalled */, NULL );

        InitializeCriticalSection(&DelBuffCriticalSection);
                                                hWorkerSemaphore = CreateSemaphore(
NULL, 0, dwDelBuffSize, NULL );
                                                dwDelBuffFreeCount = dwDelBuffSize;

                                                InitJulianTime(NULL);

                                                // create unique log file name based on
delilog-yymmdd-hhmm.log
                                                SYSTEMTIME Time;
                                                GetLocalTime( &Time );
                                                wsprintf( szLogFile, "%sdelivery-
%2.2d%2.2d%2.2d-%2.2d%2.2d.log",
                                                                Reg.szPath,
Time.wYear % 100, Time.wMonth, Time.wDay, Time.wHour, Time.wMinute );
                                                txnDelilog = new CTxnLog(szLogFile,
TXN_LOG_WRITE);

                                                //write event into txn log for START
                                                txnDelilog-
>WriteCtrlRecToLog(TXN_EVENT_START, szMyComputerName, sizeof(szMyComputerName));

                                                // allocate structures for delivery
buffers and thread mgmt
                                                pDeliHandles = new
HANDLE[dwNumDeliveryThreads];
                                                pDelBuff = new
DELIVERY_TRANSACTION[dwDelBuffSize];
                                                // launch DeliveryWorkerThread to
perform actual delivery txns
                                                for(i=0; i<dwNumDeliveryThreads; i++)
                                                {
                                                        pDeliHandles[i] = (HANDLE)
_beginthread( DeliveryWorkerThread, 0, NULL );
                                                        if (pDeliHandles[i] ==
INVALID_HANDLE_VALUE)
                                                                throw new
CWEBCLNT_ERR( ERR_DELIVERY_THREAD_FAILED );
                                                }
```

```
                                        }

                                        break;

                                case DLL_PROCESS_DETACH:
                                        if (dwNumDeliveryThreads)
                                        {
                                                if (txnDelilog != NULL)
                                                {
                                                        //write event into txn log
for STOP
                                                        txnDelilog-
>WriteCtrlRecToLog(TXN_EVENT_STOP, szMyComputerName, sizeof(szMyComputerName));

                                                        // This will do a clean
shutdown of the delivery log file
                                                        CTxnLog   *txnDelilogLocal =
txnDelilog;

                                                        txnDelilog= NULL;
                                                        delete txnDelilogLocal;
                                                }

                                                delete [] pDeliHandles;
                                                delete [] pDelBuff;

                                                CloseHandle( hWorkerSemaphore );
                                                CloseHandle( hDoneEvent );

                DeleteCriticalSection(&DelBuffCriticalSection);
                                        }

                                        DeleteCriticalSection(&TermCriticalSection);

                                        if (hLibInstanceTm != NULL)
                                                FreeLibrary( hLibInstanceTm );
                                        hLibInstanceTm = NULL;

                                        if (hLibInstanceDb != NULL)
                                                FreeLibrary( hLibInstanceDb );
                                        hLibInstanceDb = NULL;

                                        Sleep(500);
                                        break;

                                default:
                                        /* nothing */;
                        }
                }
                catch (CBaseErr *e)
                {
                        WriteMessageToEventLog( e->ErrorText() );
                        delete e;
                        TerminateExtension(0);
                        return FALSE;
                }
                catch (...)
                {
                        WriteMessageToEventLog(TEXT("Unhandled exception.  DLL could not
load."));
                        TerminateExtension(0);
                        return FALSE;
                }
                        return TRUE;
        }


        /* FUNCTION: GetExtensionVersion
         *
         * PURPOSE:         This function is called by the inet service when the DLL is first
        loaded.
         *
         * ARGUMENTS:       HSE_VERSION_INFO    *pVer     passed in structure in which to place
        expected version number.
         *
         * RETURNS:                   TRUE      inet service expected return value.
         */

        BOOL WINAPI GetExtensionVersion(HSE_VERSION_INFO *pVer)
        {
                pVer->dwExtensionVersion = MAKELONG(HSE_VERSION_MINOR, HSE_VERSION_MAJOR);
                lstrcpyn(pVer->lpszExtensionDesc, "TPC-C Server.", HSE_MAX_EXT_DLL_NAME_LEN);

                // TODO: why do we need this here instead of in the DLL attach?
                if (Reg.eTxnMon == ENCINA)
                        pCTPCC_ENCINA_post_init();

                return TRUE;
        }

        /* FUNCTION: TerminateExtension
         *
         * PURPOSE:         This function is called by the inet service when the DLL is about to
        be unloaded.
         *                           Release all resources in anticipation of being unloaded.
         *
         * RETURNS:                   TRUE      inet service expected return value.
         */

        BOOL WINAPI TerminateExtension( DWORD dwFlags )
        {
                if (pDeliHandles)
                {
                        SetEvent( hDoneEvent );
                        for(DWORD i=0; i<dwNumDeliveryThreads; i++)
                                WaitForSingleObject( pDeliHandles[i], INFINITE );
                }

                TermDeleteAll();
                return TRUE;
        }


        /* FUNCTION: HttpExtensionProc
         *
         * PURPOSE:         This function is the main entry point for the TPCC DLL. The internet
        service
         *                           calls this function passing in the http string.
         *
         * ARGUMENTS:       EXTENSION_CONTROL_BLOCK       *pECB     structure pointer to passed
        in internet
         *
                                    service information.
         *
         * RETURNS:                   DWORD     HSE_STATUS_SUCCESS
                connection can be dropped if error
```

```
 *
          HSE_STATUS_SUCCESS_AND_KEEP_CONN        keep connect valid comment sent
 *
 * COMMENTS:        None
 *
 */

DWORD WINAPI HttpExtensionProc(EXTENSION_CONTROL_BLOCK *pECB)
{
          int                           iCmd, FormId, TermId, iSyncId;
          char                szBuffer[4096];

          int                           lpbSize;
          static char         szHeader[] = "200 Ok";
          DWORD               dwSize = 6;                   // initial value is
strlen(szHeader)
          char                szHeader1[4096];


#ifdef ICECAP
          StartCAP();
#endif

          try
          {
                    //process http query
                    ProcessQueryString(pECB, &iCmd, &FormId, &TermId, &iSyncId);

                    if (TermId != 0)
                    {
                              if ( TermId < 0 || TermId >= Term.iNumEntries ||
Term.pClientData[TermId].iNextFree != -1 )
                              {
                                        // debugging...
                                        char szTmp[128];
                                        wsprintf( szTmp, "Invalid term ID; TermId = %d",
TermId );
                                        WriteMessageToEventLog( szTmp );

                                        throw new CWEBCLNT_ERR( ERR_INVALID_TERMID );
                              }

                              //must have a valid syncid here since termid is valid
                              if (iSyncId != Term.pClientData[TermId].iSyncId)
                                        throw new CWEBCLNT_ERR(
ERR_INVALID_SYNC_CONNECTION );

                              //set use time
                              Term.pClientData[TermId].iTickCount = GetTickCount();
                    }


                    switch(iCmd)
                    {
                    case 0:
                              WelcomeForm(pECB, szBuffer);
                              break;
                    case 1:
                              switch( FormId )
                              {
                                        case WELCOME_FORM:
                                        case MAIN_MENU_FORM:
                                                  break;
                                        case NEW_ORDER_FORM:
                                                  ProcessNewOrderForm(pECB, TermId,
szBuffer);
                                                  break;
                                        case PAYMENT_FORM:
                                                  ProcessPaymentForm(pECB, TermId,
szBuffer);
                                                  break;
                                        case DELIVERY_FORM:
                                                  ProcessDeliveryForm(pECB, TermId,
szBuffer);
                                                  break;
                                        case ORDER_STATUS_FORM:
                                                  ProcessOrderStatusForm(pECB, TermId,
szBuffer);
                                                  break;
                                        case STOCK_LEVEL_FORM:
                                                  ProcessStockLevelForm(pECB, TermId,
szBuffer);
                                                  break;
                              }
                              break;
                    case 2:
                              // new-order selected from menu; display new-order input
form
                              MakeNewOrderForm(TermId, NULL, INPUT_FORM, szBuffer);
                              break;
                    case 3:
                              // payment selected from menu; display payment input form
                              MakePaymentForm(TermId, NULL, INPUT_FORM, szBuffer);
                              break;
                    case 4:
                              // delivery selected from menu; display delivery input form
                              MakeDeliveryForm(TermId, NULL, INPUT_FORM, szBuffer);
                              break;
                    case 5:
                              // order-status selected from menu; display order-status
input form
                              MakeOrderStatusForm(TermId, NULL, INPUT_FORM, szBuffer);
                              break;
                    case 6:
                              // stock-level selected from menu; display stock-level
input form
                              MakeStockLevelForm(TermId, NULL, INPUT_FORM, szBuffer);
                              break;
                    case 7:
                              // ExitCmd
                              TermDelete(TermId);
                              WelcomeForm(pECB, szBuffer);
                              break;
                    case 8:
                              SubmitCmd(pECB, szBuffer);
                              break;
                    case 9:
                              // menu
                              MakeMainMenuForm(TermId, Term.pClientData[TermId].iSyncId,
szBuffer);
                              break;
                    case 10:
                              // CMD=Clear
                              // resets all connections; should only be used when no
other connections are active
                              TermDeleteAll();
```

```
                                TermInit();
                                WelcomeForm(pECB, szBuffer);
                                break;
                        case 11:  // CMD=Stats
                                StatsCmd(pECB, szBuffer);
                                break;
                        }
                }
                catch (CBaseErr *e)
                {
                        ErrorForm( pECB, e->ErrorType(), e->ErrorNum(), TermId, iSyncId, e-
>ErrorText(), szBuffer );
                        delete e;
                }
                catch (...)
                {
                        ErrorForm( pECB, ERR_TYPE_WEBDLL, 0, TermId, iSyncId, "Error:
Unhandled exception in Web Client.", szBuffer );
                }

#ifdef ICECAP
                StopCAP();
#endif


                lpbSize = strlen(szBuffer);
                wsprintf(szHeader1,
                                "Content-Type: text/html\r\n"
                                "Content-Length: %d\r\n"
                                "Connection: Keep-Alive\r\n\r\n" , lpbSize);
                strcat( szHeader1, szBuffer );

                (*pECB->ServerSupportFunction)(pECB->ConnID, HSE_REQ_SEND_RESPONSE_HEADER,
szHeader, (LPDWORD) &dwSize, (LPDWORD)szHeader1);

                //finish up and keep connection
                pECB->dwHttpStatusCode = 200;
                return HSE_STATUS_SUCCESS_AND_KEEP_CONN;
}


void WriteMessageToEventLog(LPTSTR lpszMsg)
{
    TCHAR   szMsg[256];
    HANDLE  hEventSource;
    LPTSTR  lpszStrings[2];

    // Use event logging to log the error.
    //
    hEventSource = RegisterEventSource(NULL, TEXT("TPCC.DLL"));

    _stprintf(szMsg, TEXT("Error in TPCC.DLL: "));
    lpszStrings[0] = szMsg;
    lpszStrings[1] = lpszMsg;

    if (hEventSource != NULL)
          {
        ReportEvent(hEventSource, // handle of event source
            EVENTLOG_ERROR_TYPE,  // event type
            0,                    // event category
            0,                    // event ID
            NULL,                 // current user's SID
            2,                    // strings in lpszStrings
            0,                    // no bytes of raw data
            (LPCTSTR *)lpszStrings,    // array of error strings
            NULL);                // no raw data

        (VOID) DeregisterEventSource(hEventSource);
    }
}


/* FUNCTION: DeliveryWorkerThread
 *
 * PURPOSE:         This function processes deferred delivery txns.  There are typically
several
 *                          threads running this routine.  The number of threads is
determined by an entry
 *                          read from the registry.  The thread waits for work by
waiting on semaphore.
 *                          When a delivery txn is posted, the semaphore is released.
After processing
 *                          the delivery txn, information is logged to record the txn
status and execution
 *                          time.
 */

/*static*/ void DeliveryWorkerThread(void *ptr)
{
          CTPCC_BASE                    *pTxn = NULL;

          DELIVERY_TRANSACTION                    delivery;
          PDELIVERY_DATA                                    pDeliveryData;
          TXN_RECORD_TPCC_DELIV_DEF     txnDeliRec;

          DWORD                                             index;
          HANDLE                                            handles[2];

          SYSTEMTIME                    trans_end;                  //delivery
transaction finished time
          SYSTEMTIME                    trans_start;        //delivery transaction start
time

          assert(txnDelilog != NULL);

          try
          {
                    if (Reg.eDB_Protocol == ODBC)
                              pTxn = pCTPCC_ODBC_new( Reg.szDbServer, Reg.szDbUser,
Reg.szDbPassword, szMyComputerName, Reg.szDbName );
                    else if (Reg.eDB_Protocol == DBLIB)
                              pTxn = pCTPCC_DBLIB_new( Reg.szDbServer, Reg.szDbUser,
Reg.szDbPassword, szMyComputerName, Reg.szDbName );
                    pDeliveryData = pTxn->BuffAddr_Delivery();
          }
          catch (CBaseErr *e)
          {
                    char szTmp[1024];
                    wsprintf( szTmp, "Error in Delivery Txn thread.  Could not connect to
database.  "
                                                  "%s.  Server=%s, User=%s, Password=%s,
Database=%s",
                                                  e->ErrorText(), Reg.szDbServer, Reg.szDbUser,
Reg.szDbPassword, Reg.szDbName );
                    WriteMessageToEventLog( szTmp );
                    delete e;
```

```
                    goto ErrorExit;
          }
          catch (...)
          {
                    WriteMessageToEventLog(TEXT("Unhandled exception caught in
DeliveryWorkerThread."));
                    goto ErrorExit;
          }

          while (TRUE)
          {
                    try
                    {
                              //while delivery thread running, i.e. user has not
requested termination
                              while (TRUE)
                              {
                                        // need to wait for multiple objects: program
exit or worker semaphore;
                                        handles[0] = hDoneEvent;
                                        handles[1] = hWorkerSemaphore;
                                        index = WaitForMultipleObjects( 2, &handles[0],
FALSE, INFINITE );
                                        if (index == WAIT_OBJECT_0)
                                                  goto ErrorExit;

                                        ZeroMemory(&txnDeliRec, sizeof(txnDeliRec));
                                        txnDeliRec.TxnType = TXN_REC_TYPE_TPCC_DELIV_DEF;

                                        // make a local copy of current entry from
delivery buffer and increment buffer index
                                        EnterCriticalSection(&DelBuffCriticalSection);
                                        delivery = *(pDelBuff+dwDelBuffBusyIndex);
                                        dwDelBuffFreeCount++;
                                        dwDelBuffBusyIndex++;
                                        if (dwDelBuffBusyIndex == dwDelBuffSize)
          // wrap-around if at end of buffer
                                                  dwDelBuffBusyIndex = 0;

                                        LeaveCriticalSection(&DelBuffCriticalSection);

                                        pDeliveryData->w_id = delivery.w_id;
                                        pDeliveryData->o_carrier_id =
delivery.o_carrier_id;

                                        txnDeliRec.w_id = pDeliveryData->w_id;
                                        txnDeliRec.o_carrier_id = pDeliveryData-
>o_carrier_id;
                                        txnDeliRec.TxnStartT0 =
Get64BitTime(&delivery.queue);

                                        GetLocalTime( &trans_start );
                                        pTxn->Delivery();
                                        GetLocalTime( &trans_end );

                                        //log txn
                                        txnDeliRec.TxnStatus = ERR_SUCCESS;
                                        for (int i=0; i<10; i++)
                                                  txnDeliRec.o_id[i] = pDeliveryData-
>o_id[i];
                                        txnDeliRec.DeltaT4 =
(int)(Get64BitTime(&trans_end) - txnDeliRec.TxnStartT0);
                                        txnDeliRec.DeltaTxnExec =
(int)(Get64BitTime(&trans_end) - Get64BitTime(&trans_start));

                                        if (txnDelilog != NULL)
                                                  txnDelilog->WriteToLog(&txnDeliRec);
                              }
                    }
                    catch (CBaseErr *e)
                    {
                              char szTmp[1024];
                              wsprintf( szTmp, "Error in Delivery Txn thread.  %s", e-
>ErrorText() );
                              WriteMessageToEventLog( szTmp );

                              // log the error txn
                              txnDeliRec.TxnStatus = e->ErrorType();
                              if (txnDelilog != NULL)
                                        txnDelilog->WriteToLog(&txnDeliRec);

                              delete e;
                    }
                    catch (...)
                    {
                              // unhandled exception; shouldn't happen; not much we can
do...
                              WriteMessageToEventLog(TEXT("Unhandled exception caught in
DeliveryWorkerThread."));
                    }
          }

ErrorExit:
          delete pTxn;
          _endthread();
}

/* FUNCTION: PostDeliveryInfo
 *
 * PURPOSE:         This function enters the delivery txn into the deferred delivery
buffer.
 *
 * RETURNS:                   BOOL      FALSE     delivery information posted
successfully
 *                                                                TRUE      error cannot post
delivery info
 */

BOOL PostDeliveryInfo(short w_id, short o_carrier_id)
{
          BOOL bError;

          EnterCriticalSection(&DelBuffCriticalSection);
          if (dwDelBuffFreeCount > 0)
          {
                    bError = FALSE;
                    (pDelBuff+dwDelBuffFreeIndex)->w_id                        = w_id;
                    (pDelBuff+dwDelBuffFreeIndex)->o_carrier_id       = o_carrier_id;
                    GetLocalTime(&(pDelBuff+dwDelBuffFreeIndex)->queue);

                    dwDelBuffFreeCount--;
                    dwDelBuffFreeIndex++;
                    if (dwDelBuffFreeIndex == dwDelBuffSize)
                              dwDelBuffFreeIndex = 0;                 // wrap-around if
at end of buffer
```

```
          }
          else
                    // No free buffers.  Return an error, which indicates that the
delivery buffer is full.
                    // Most likely, the number of delivery worker threads needs to be
increased to keep up
                    // with the txn rate.
                    bError = TRUE;
          LeaveCriticalSection(&DelBuffCriticalSection);

          if (!bError)
                    // increment worker semaphore to wake up a worker thread
                    ReleaseSemaphore( hWorkerSemaphore, 1, NULL );

          return bError;
}

/* FUNCTION: ProcessQueryString
 *
 * PURPOSE:         This function extracts the relevent information out of the http
command passed in from
 *                            the browser.
 *
 * COMMENTS:        If this is the initial connection i.e. client is at welcome screen
then
 *                                      there will not be a terminal id or current form
id.  If this is the case
 *                                      then the pTermid and pFormid return values are
undefined.
 */

void ProcessQueryString(EXTENSION_CONTROL_BLOCK *pECB, int *pCmd, int *pFormId, int
*pTermId, int *pSyncId)
{
          char *ptr = pECB->lpszQueryString;
          char szBuffer[25];
          int i;

          //allowable client command strings i.e. CMD=command
          static char *szCmds[] =
          {
                    "Process", "..NewOrder..", "..Payment..", "..Delivery..", "..Order-
Status..", "..Stock-Level..",
                    "..Exit..", "Submit", "Menu", "Clear", "Stats", ""
          };

          *pCmd      = 0;               // default is the login screen
          *pTermId = 0;

          // if no params (i.e., empty query string), then return login screen
          if (strlen(pECB->lpszQueryString) == 0)
                    return;

          // parse FORMID, TERMID, and SYNCID
          *pFormId = GetIntKeyValue(&ptr, "FORMID", NO_ERR, NO_ERR);
          *pTermId = GetIntKeyValue(&ptr, "TERMID", NO_ERR, NO_ERR);
          *pSyncId = GetIntKeyValue(&ptr, "SYNCID", NO_ERR, NO_ERR);

          // parse CMD
          GetKeyValue(&ptr, "CMD", szBuffer, sizeof(szBuffer), ERR_COMMAND_UNDEFINED);

          // see which command it matches
          for(i=0; ; i++)
          {
                    if (szCmds[i][0] == 0)
                              // no more; no match; return error
                              throw new CWEBCLNT_ERR( ERR_COMMAND_UNDEFINED );
                    if ( !strcmp(szCmds[i], szBuffer) )
                    {
                              *pCmd = i+1;
                              break;
                    }
          }
}

/* FUNCTION: void WelcomeForm
 *
 */

void WelcomeForm(EXTENSION_CONTROL_BLOCK *pECB, char *szBuffer)
{
          char szTmp[1024];

          //welcome to tpc-c html form buffer, this is first form client sees.
          strcpy( szBuffer,   "<HTML><HEAD><TITLE>TPC-C Web Client</TITLE></HEAD><BODY>"
                                                                    "<B><BIG>Microsoft TPC-C Web
Client (ver 4.20)</BIG></B> <BR> <BR>"
                                                                    "<font face=\"Courier
New\"><PRE>"
                                                                    "Compiled: "__DATE__",
"__TIME__" <BR>"
                                                                    "Source:   "__FILE__"
("__TIMESTAMP__") <BR>"
                                                                    "</PRE></font>"
                                                                    "<FORM ACTION=\"tpcc.dll\"
METHOD=\"GET\">"
                                                                    "<INPUT TYPE=\"hidden\"
NAME=\"STATUSID\" VALUE=\"0\">"
                                                                    "<INPUT TYPE=\"hidden\"
NAME=\"ERROR\" VALUE=\"0\">"
                                                                    "<INPUT TYPE=\"hidden\"
NAME=\"FORMID\" VALUE=\"1\">"
                                                                    "<INPUT TYPE=\"hidden\"
NAME=\"TERMID\" VALUE=\"0\">"
                                                                    "<INPUT TYPE=\"hidden\"
NAME=\"SYNCID\" VALUE=\"0\">"
                                                                    "<INPUT TYPE=\"hidden\"
NAME=\"VERSION\" VALUE=\"" WEBCLIENT_VERSION "\">"
                                        );

          sprintf( szTmp,     "Configuration Settings: <BR><font face=\"Courier New\"
color=\"blue\"><PRE>"
                                                  "Txn Monitor            =
<B>%s</B><BR>"
                                                  "Database protocol      =
<B>%s</B><BR>"
                                                  "Max Connections        =
<B>%d</B><BR>"
                                                  "# of Delivery Threads  =
<B>%d</B><BR>"
                                                  "Max Pending Deliveries =
<B>%d</B><BR>"
                                        , szTxnMonNames[Reg.eTxnMon], szDBNames[Reg.eDB_Protocol],
                                        Reg.dwMaxConnections, dwNumDeliveryThreads, dwDelBuffSize
);
          strcat( szBuffer, szTmp);
```

```
        if (Reg.eTxnMon == COM)
        {
                sprintf( szTmp,     "COM Single Pool        = <B>%s</B><BR>",
                         Reg.bCOM_SinglePool ? "YES" : "NO" );
                strcat( szBuffer, szTmp);
        }
        strcat( szBuffer, "</PRE></font>");

        if (Reg.eTxnMon == None)
                // connection options may be specified when not using a txn monitor
                sprintf( szTmp,     "Please enter your database options for this
connection:<BR>"
                                                        "<font face=\"Courier New\"
color=\"blue\"><PRE>"
                                                        "DB Server    = <INPUT
NAME=\"db_server\" SIZE=20 VALUE=\"%s\"><BR>"
                                                        "DB User ID   = <INPUT
NAME=\"db_user\" SIZE=20 VALUE=\"%s\"><BR>"
                                                        "DB Password  = <INPUT
NAME=\"db_passwd\" SIZE=20 VALUE=\"%s\"><BR>"
                                                        "DB Name      = <INPUT
NAME=\"db_name\" SIZE=20 VALUE=\"%s\"><BR>"
                                                        "</PRE></font>"
                                        , Reg.szDbServer, Reg.szDbUser,
Reg.szDbPassword, Reg.szDbName );
        else
                // if using a txn monitor, connection options are determined from
registry; can't
                // set per user.  show options fyi
                sprintf( szTmp,     "Database options which will be used by the
transaction monitor:<BR>"
                                                        "<font face=\"Courier New\"
color=\"blue\"><PRE>"
                                                        "DB Server              =
<B>%s</B><BR>"
                                                        "DB User ID             =
<B>%s</B><BR>"
                                                        "DB Password            =
<B>%s</B><BR>"
                                                        "DB Name                =
<B>%s</B><BR>"
                                                        "</PRE></font>"
                                        , Reg.szDbServer, Reg.szDbUser,
Reg.szDbPassword, Reg.szDbName );
        strcat( szBuffer, szTmp);

        sprintf( szTmp,     "Please enter your Warehouse and District for this
session:<BR>"
                                                "<font face=\"Courier New\"
color=\"blue\"><PRE>" );
        strcat( szBuffer, szTmp);
        strcat( szBuffer,   "Warehouse ID = <INPUT NAME=\"w_id\" SIZE=4><BR>"
                                                        "District ID  = <INPUT
NAME=\"d_id\" SIZE=2><BR>"
                                                        "</PRE></font><HR>"
                                                        "<INPUT TYPE=\"submit\"
NAME=\"CMD\" VALUE=\"Submit\">"
                                                        "</FORM></BODY></HTML>");
}

/* FUNCTION: SubmitCmd
 *
 * PURPOSE:         This function allocated a new terminal id in the Term structure
array.
 *
 */

void SubmitCmd(EXTENSION_CONTROL_BLOCK *pECB, char *szBuffer)
{
        int                 iNewTerm;
        char      *ptr = pECB->lpszQueryString;

        char      szVersion[32]       = { 0 };
        char      szServer[32]        = { 0 };
        char      szUser[32]                  = "sa";
        char      szPassword[32]      = { 0 };
        char      szDatabase[32]      = "tpcc";

        // validate version field; the version field ensures that the RTE is
synchronized with the web client
        GetKeyValue(&ptr, "VERSION", szVersion, sizeof(szVersion),
ERR_VERSION_MISMATCH);
        if ( strcmp( szVersion, WEBCLIENT_VERSION ) )
                throw new CWEBCLNT_ERR( ERR_VERSION_MISMATCH );

        if (Reg.eTxnMon == None)
        {
                // parse Server name
                GetKeyValue(&ptr, "db_server", szServer, sizeof(szServer),
ERR_NO_SERVER_SPECIFIED);
                // parse User name
                GetKeyValue(&ptr, "db_user", szUser, sizeof(szUser), NO_ERR);
                // parse Password
                GetKeyValue(&ptr, "db_passwd", szPassword, sizeof(szPassword),
NO_ERR);
                // parse Database name
                GetKeyValue(&ptr, "db_name", szDatabase, sizeof(szDatabase), NO_ERR);
        }

        // parse warehouse ID
        int w_id = GetIntKeyValue(&ptr, "w_id", ERR_HTML_ILL_FORMED, ERR_W_ID_INVALID);
        if ( w_id < 1 )
                throw new CWEBCLNT_ERR( ERR_W_ID_INVALID );

        // parse district ID
        int d_id = GetIntKeyValue(&ptr, "d_id", ERR_HTML_ILL_FORMED, ERR_D_ID_INVALID);
        if ( d_id < 1 || d_id > 10 )
                throw new CWEBCLNT_ERR( ERR_D_ID_INVALID );


        iNewTerm = TermAdd();

        Term.pClientData[iNewTerm].w_id = w_id;
        Term.pClientData[iNewTerm].d_id = d_id;

        try
        {
                if (Reg.eTxnMon == TUXEDO)
                        Term.pClientData[iNewTerm].pTxn = pCTPCC_TUXEDO_new();
                else if (Reg.eTxnMon == ENCINA)
                        Term.pClientData[iNewTerm].pTxn = pCTPCC_ENCINA_new();
                else if (Reg.eTxnMon == COM)
                        Term.pClientData[iNewTerm].pTxn = pCTPCC_COM_new(
Reg.bCOM_SinglePool );
                else if (Reg.eDB_Protocol == ODBC)
```


Copyright Dell

```
                                Term.pClientData[iNewTerm].pTxn = pCTPCC_ODBC_new(
szServer, szUser, szPassword, szMyComputerName, szDatabase );
                        else if (Reg.eDB_Protocol == DBLIB)
                                Term.pClientData[iNewTerm].pTxn = pCTPCC_DBLIB_new(
szServer, szUser, szPassword, szMyComputerName, szDatabase );
                }
                catch (...)
                {
                        TermDelete(iNewTerm);
                        throw;              // pass exception upward
                }

                MakeMainMenuForm(iNewTerm, Term.pClientData[iNewTerm].iSyncId, szBuffer);
}

/* FUNCTION: StatsCmd
 *
 * PURPOSE:         This function returns to the browser the total number of active
terminal ids.
 *                              This routine is for development/debugging purposes.
 *
 */

void StatsCmd(EXTENSION_CONTROL_BLOCK *pECB, char *szBuffer)
{
                int i;
                int       iTotal;

                EnterCriticalSection(&TermCriticalSection);

                iTotal = 0;
                for(i=0; i<Term.iNumEntries; i++)
                {
                        if (Term.pClientData[i].iNextFree == -1)
                                iTotal++;
                }

                LeaveCriticalSection(&TermCriticalSection);

                wsprintf( szBuffer,
                                "<HTML><HEAD><TITLE>TPC-C Web Client Stats</TITLE></HEAD>"
                                "<BODY><B><BIG> Total Active Connections: %d
</BIG></B><BR></BODY></HTML>"
                                , iTotal );
}

char *CWEBCLNT_ERR::ErrorText()
{
                static SERRORMSG errorMsgs[] =
                {
                        {       ERR_COMMAND_UNDEFINED,
                "Command undefined."
                                                                        },
                        {       ERR_D_ID_INVALID,
                "Invalid District ID Must be 1 to 10."
                                },
                        {       ERR_DELIVERY_CARRIER_ID_RANGE,
                "Delivery Carrier ID out of range must be 1 - 10."
                        },
                        {       ERR_DELIVERY_CARRIER_INVALID,                   "Delivery
Carrier ID invalid must be numeric 1 - 10."                                     },
                        {       ERR_DELIVERY_MISSING_OCD_KEY,                   "Delivery
missing Carrier ID key \"OCD*\"."
                }
                        {       ERR_DELIVERY_THREAD_FAILED,
                "Could not start delivery worker thread."
                                },
                        {       ERR_GETPROCADDR_FAILED,
                "Could not map proc in DLL.  GetProcAddr error.  DLL="
                }
                        {       ERR_HTML_ILL_FORMED,
                "Required key field is missing from HTML string."
                }
                        {       ERR_INVALID_SYNC_CONNECTION,                    "Invalid
Terminal Sync ID."
                                },
                        {       ERR_INVALID_TERMID,
                "Invalid Terminal ID."
                                                                        },
                        {       ERR_LOADDLL_FAILED,
                "Load of DLL failed.  DLL="
                                                                        },
                        {       ERR_MAX_CONNECTIONS_EXCEEDED,                   "No
connections available.  Max Connections is probably too low."   },
                        {       ERR_MISSING_REGISTRY_ENTRIES,                   "Required
registry entries are missing.  Rerun INSTALL to correct."   },
                        {       ERR_NEWORDER_CUSTOMER_INVALID,
                "New Order customer id invalid data type, range = 1 to 3000."
                }
                        {       ERR_NEWORDER_CUSTOMER_KEY,
                "New Order missing Customer key \"CID*\"."
                                },
                        {       ERR_NEWORDER_DISTRICT_INVALID,
                "New Order District ID Invalid range 1 - 10."
                        }
                        {       ERR_NEWORDER_FORM_MISSING_DID,
                "New Order missing District key \"DID*\"."
                                },
                        {       ERR_NEWORDER_ITEMID_INVALID,                    "New
Order Item Id is wrong data type, must be numeric."                             },
                        {       ERR_NEWORDER_ITEMID_RANGE,
                "New Order Item Id is out of range. Range = 1 to 999999."
                }
                        {       ERR_NEWORDER_ITEMID_WITHOUT_SUPPW,              "New
Order Item_Id field entered without a corresponding Supp_W."          },
                        {       ERR_NEWORDER_MISSING_IID_KEY,                   "New
Order missing Item Id key \"IID*\"."
                }
                        {       ERR_NEWORDER_MISSING_QTY_KEY,                   "New
Order Missing Qty key \"Qty##*\"."
                        }
                        {       ERR_NEWORDER_MISSING_SUPPW_KEY,
                "New Order missing Supp_W key \"SP##*\"."
                                },
                        {       ERR_NEWORDER_NOITEMS_ENTERED,                   "New
Order No order lines entered."
                                },
                        {       ERR_NEWORDER_QTY_INVALID,
                "New Order Qty invalid must be numeric range 1 - 99."
                }
                        {       ERR_NEWORDER_QTY_RANGE,
                "New Order Qty is out of range. Range = 1 to 99."
                }
```

```
                    {         ERR_NEWORDER_QTY_WITHOUT_SUPPW,
          "New Order Qty field entered without a corresponding Supp_W."
          },
                    {         ERR_NEWORDER_SUPPW_INVALID,
          "New Order Supp_W invalid data type must be numeric."
          },
                    {         ERR_NO_SERVER_SPECIFIED,
          "No Server name specified."
                                        },
                    {         ERR_ORDERSTATUS_CID_AND_CLT,                    "Order
Status Only Customer ID or Last Name may be entered, not both."       },
                    {         ERR_ORDERSTATUS_CID_INVALID,                    "Order
Status Customer ID invalid, range must be numeric 1 - 3000."          },
                    {         ERR_ORDERSTATUS_CLT_RANGE,
          "Order Status Customer last name longer than 16 characters."
          },
                    {         ERR_ORDERSTATUS_DID_INVALID,                    "Order
Status District invalid, value must be numeric 1 - 10."               },
                    {         ERR_ORDERSTATUS_MISSING_CID_CLT,                "Order
Status Either Customer ID or Last Name must be entered."              },
                    {         ERR_ORDERSTATUS_MISSING_CID_KEY,                "Order
Status missing Customer key \"CID*\"."
          },
                    {         ERR_ORDERSTATUS_MISSING_CLT_KEY,                "Order
Status missing Customer Last Name key \"CLT*\"."                          },
                    {         ERR_ORDERSTATUS_MISSING_DID_KEY,                "Order
Status missing District key \"DID*\"."
          },
                    {         ERR_PAYMENT_CDI_INVALID,
          "Payment Customer district invalid must be numeric."
          },
                    {         ERR_PAYMENT_CID_AND_CLT,
          "Payment Only Customer ID or Last Name may be entered, not both."     },
                    {         ERR_PAYMENT_CUSTOMER_INVALID,                   "Payment
Customer data type invalid, must be numeric."                             },
                    {         ERR_PAYMENT_CWI_INVALID,
          "Payment Customer Warehouse invalid, must be numeric."
          },
                    {         ERR_PAYMENT_DISTRICT_INVALID,                   "Payment
District ID is invalid, must be 1 - 10."
          },
                    {         ERR_PAYMENT_HAM_INVALID,
          "Payment Amount invalid data type must be numeric."
                    },
                    {         ERR_PAYMENT_HAM_RANGE,
          "Payment Amount out of range, 0 - 9999.99."
                              },
                    {         ERR_PAYMENT_LAST_NAME_TO_LONG,
          "Payment Customer last name longer than 16 characters."
          },
                    {         ERR_PAYMENT_MISSING_CDI_KEY,                    "Payment
missing Customer district key \"CDI*\"."
          },
                    {         ERR_PAYMENT_MISSING_CID_CLT,                    "Payment
Either Customer ID or Last Name must be entered."                     },
                    {         ERR_PAYMENT_MISSING_CID_KEY,                    "Payment
missing Customer Key \"CID*\"."
          },
                    {         ERR_PAYMENT_MISSING_CLT_KEY,                    "Payment
missing Customer Last Name key \"CLT*\"."
          },
                    {         ERR_PAYMENT_MISSING_CWI_KEY,                    "Payment
missing Customer Warehouse key \"CWI*\"."
          },
                    {         ERR_PAYMENT_MISSING_DID_KEY,                    "Payment
missing District Key \"DID*\"."
          },
                    {         ERR_PAYMENT_MISSING_HAM_KEY,                    "Payment
missing Amount key \"HAM*\"."
          },
                    {         ERR_STOCKLEVEL_MISSING_THRESHOLD_KEY,   "Stock Level;
missing Threshold key \"TT*\"."
          },
                    {         ERR_STOCKLEVEL_THRESHOLD_INVALID,               "Stock
Level; Threshold value must be in the range = 1 - 99."                },
                    {         ERR_STOCKLEVEL_THRESHOLD_RANGE,
          "Stock Level Threshold out of range, range must be 1 - 99."
          },
                    {         ERR_VERSION_MISMATCH,
          "Invalid version field.  RTE and Web Client are probably out of sync." },
                    {         ERR_W_ID_INVALID,
          "Invalid Warehouse ID."
                                                                  },
                    {         0,
                                        ""

                              }
          };

          char szTmp[256];
          int i = 0;
          while (TRUE)
          {
                    if (errorMsgs[i].szMsg[0] == 0)
                    {
                              strcpy( szTmp, "Unknown error number." );
                              break;
                    }
                    if (m_Error == errorMsgs[i].iError)
                    {
                              strcpy( szTmp, errorMsgs[i].szMsg );
                              break;
                    }
                    i++;
          }

          if (m_szTextDetail)
                    strcat( szTmp, m_szTextDetail );
          if (m_SystemErr)
                    wsprintf( szTmp+strlen(szTmp), "  Error=%d", m_SystemErr );

          m_szErrorText = new char[strlen(szTmp)+1];
          strcpy( m_szErrorText, szTmp );
          return m_szErrorText;

}

/* FUNCTION: GetKeyValue
 *
 * PURPOSE:         This function parses a http formatted string for specific key values.
 *
 * ARGUMENTS:       char                          *pQueryString       http string from
client browser
```

```
 *                                      char                            *pKey
          key value to look for
 *                                      char                            *pValue
          character array into which to place key's value
 *                                      int                                     iMax
                   maximum length of key value array.
 *                                      WEBERROR            err
          error value to throw
 *
 * RETURNS:                   nothing.
 *
 * ERROR:           if (the pKey value is not found) then
 *                                                  if (err == 0)
 *                                                           return (empty string)
 *                                                  else
 *                                                           throw CWEBCLNT_ERR(err)
 *
 * COMMENTS:        http keys are formatted either KEY=value& or KEY=value\0. This DLL
formats
 *                                      TPC-C input fields in such a manner that the keys
can be extracted in the
 *                                      above manner.
 */

void GetKeyValue(char **pQueryString, char *pKey, char *pValue, int iMax, WEBERROR err)
{
          char *ptr;

          if ( !(ptr=strstr(*pQueryString, pKey)) )
                   goto ErrorExit;
          ptr += strlen(pKey);
          if ( *ptr != '=' )
                   goto ErrorExit;
          ptr++;

          iMax--;  // one position is for terminating null
          while( *ptr && *ptr != '&' && iMax)
          {
                   *pValue++ = *ptr++;
                   iMax--;
          }
          *pValue = 0;  // terminating null

          *pQueryString = ptr;
          return;

ErrorExit:
          if (err != NO_ERR)
                   throw new CWEBCLNT_ERR( err );
          *pValue = 0;  // return empty result string
}

/* FUNCTION: GetIntKeyValue
 *
 * PURPOSE:         This function parses a http formatted string for a specific key
value.
 *
 * ARGUMENTS:       char                            *pQueryString       http string from
client browser
 *                                      char                            *pKey
          key value to look for
 *                                      WEBERROR            NoKeyErr            error
value to throw if key not found
 *                                      WEBERROR            NotIntErr           error
value to throw if value not numeric
 *
 * RETURNS:                   integer
 *
 * ERROR:           if (the pKey value is not found) then
 *                                                  if (NoKeyErr != NO_ERR)
 *                                                           throw CWEBCLNT_ERR(err)
 *                                                  else
 *                                                           return 0
 *                                      else if (non-numeric char found) then
 *                                                  if (NotIntErr != NO_ERR) then
 *                                                           throw CWEBCLNT_ERR(err)
 *                                                  else
 *                                                           return 0
 *
 * COMMENTS:        http keys are formatted either KEY=value& or KEY=value\0. This DLL
formats
 *                                      TPC-C input fields in such a manner that the keys
can be extracted in the
 *                                      above manner.
 */

int GetIntKeyValue(char **pQueryString, char *pKey, WEBERROR NoKeyErr, WEBERROR
NotIntErr)
{
          char *ptr0;
          char *ptr;

          if ( !(ptr=strstr(*pQueryString, pKey)) )
                   goto ErrorNoKey;
          ptr += strlen(pKey);
          if ( *ptr != '=' )
                   goto ErrorNoKey;
          ptr++;

          ptr0 = ptr;                     // remember starting point
          // scan string until a terminator (null or &) or a non-digit
          while( *ptr && *ptr != '&' && isdigit(*ptr) )
                   ptr++;

          // make sure we stopped scanning for the right reason
          if ((ptr0 == ptr) || (*ptr && *ptr != '&'))
          {
                   if (NotIntErr != NO_ERR)
                            throw new CWEBCLNT_ERR( NoKeyErr );
                   return 0;
          }

          *pQueryString = ptr;
          return atoi(ptr0);

ErrorNoKey:
          if (NoKeyErr != NO_ERR)
                   throw new CWEBCLNT_ERR( NoKeyErr );
          return 0;
}

/* FUNCTION: TermInit
 *
 * PURPOSE:         This function initializes the client terminal structure; it is called
when the TPCC.DLL
 *                            is first loaded by the inet service.
```

```
 *
 */

void TermInit(void)
{
          EnterCriticalSection(&TermCriticalSection);

          Term.iMasterSyncId  = 1;
          Term.iNumEntries    = Reg.dwMaxConnections+1;

          Term.pClientData    = NULL;
          Term.pClientData    = (PCLIENTDATA)malloc(Term.iNumEntries *
sizeof(CLIENTDATA));
          if (Term.pClientData == NULL)
          {
                    LeaveCriticalSection(&TermCriticalSection);
                    throw new CWEBCLNT_ERR( ERR_MEM_ALLOC_FAILED );
          }

          ZeroMemory( Term.pClientData, Term.iNumEntries * sizeof(CLIENTDATA) );

          Term.iFreeList                = Term.iNumEntries-1;
          // build free list
          // note: Term.pClientData[0].iNextFree gets set to -1, which marks it as "in
use".
          //       This is intentional, as the zero entry is used as an anchor and never
          //                  allocated as an actual terminal.
          for(int i=0; i<Term.iNumEntries; i++)
                    Term.pClientData[i].iNextFree = i-1;

          LeaveCriticalSection(&TermCriticalSection);
}

/* FUNCTION: TermDeleteAll
 *
 * PURPOSE:         This function frees allocated resources associated with the terminal
structure.
 *
 * ARGUMENTS:       none
 *
 * RETURNS:                   None
 *
 * COMMENTS:        This function is called only when the inet service unloads the
TPCC.DLL
 *
 */

void TermDeleteAll(void)
{
          EnterCriticalSection(&TermCriticalSection);

          for(int i=1; i<Term.iNumEntries; i++)
          {
                    if (Term.pClientData[i].iNextFree == -1)
                              delete Term.pClientData[i].pTxn;
          }

          Term.iFreeList                = 0;
          Term.iNumEntries    = 0;
          if ( Term.pClientData )
                    free(Term.pClientData);
          Term.pClientData    = NULL;
          LeaveCriticalSection(&TermCriticalSection);
}

/* FUNCTION: TermAdd
 *
 * PURPOSE:         This function assigns a terminal id which is used to identify a
client browser.
 *
 * RETURNS:                   int                 assigned terminal id
 *
 */

int TermAdd(void)
{
          DWORD     i;
          int                 iNewTerm, iTickCount;

          if (Term.iNumEntries == 0)
                    return -1;

          EnterCriticalSection(&TermCriticalSection);
          if (Term.iFreeList != 0)
          {         // position is available
                    iNewTerm = Term.iFreeList;
                    Term.iFreeList = Term.pClientData[iNewTerm].iNextFree;
                    Term.pClientData[iNewTerm].iNextFree = -1;  // indicates this
position is in use
          }
          else
          {         // no open slots, so find the slot that hasn't been used in the
longest time and reuse it
                    for(iNewTerm=1, i=1, iTickCount=0x7FFFFFFF; i<Reg.dwMaxConnections;
i++)
                    {
                              if (iTickCount > Term.pClientData[i].iTickCount)
                              {
                                        iTickCount = Term.pClientData[i].iTickCount;
                                        iNewTerm = i;
                              }
                    }
                    // if oldest term is less than one minute old, it probably means that
more connections
                    // are being attempted than were specified as "Max Connections" at
install.  In this case,
                    // do not bump existing connection; instead, return error to
requestor.
                    if ((GetTickCount() - iTickCount) < 60000)
                    {
                              LeaveCriticalSection(&TermCriticalSection);
                              throw new CWEBCLNT_ERR( ERR_MAX_CONNECTIONS_EXCEEDED );
                    }
          }

          Term.pClientData[iNewTerm].iTickCount = GetTickCount();
          Term.pClientData[iNewTerm].iSyncId = Term.iMasterSyncId++;
          Term.pClientData[iNewTerm].pTxn = NULL;

          LeaveCriticalSection(&TermCriticalSection);
          return iNewTerm;
}

/* FUNCTION: TermDelete
 *
```

```
 * PURPOSE:         This function makes a terminal entry in the Term array available for
reuse.
 *
 * ARGUMENTS:       int                                                     id
          Terminal id of client exiting
 *
 */

void TermDelete(int id)
{
          if ( id > 0 && id < Term.iNumEntries )
          {
                    delete Term.pClientData[id].pTxn;

                    // put onto free list
                    EnterCriticalSection(&TermCriticalSection);

                    Term.pClientData[id].iNextFree = Term.iFreeList;
                    Term.iFreeList = id;

                    LeaveCriticalSection(&TermCriticalSection);
          }
}


/* FUNCTION: MakeErrorForm
 */

void ErrorForm(EXTENSION_CONTROL_BLOCK *pECB, int iType, int iErrorNum, int iTermId, int
iSyncId, char *szErrorText, char *szBuffer )
{
          wsprintf(szBuffer,
                    "<HTML><HEAD><TITLE>TPC-C Error</TITLE></HEAD><BODY>"
                    "<FORM ACTION=\"tpcc.dll\" METHOD=\"GET\">"
                    "<INPUT TYPE=\"hidden\" NAME=\"STATUSID\" VALUE=\"%d\">"
                    "<INPUT TYPE=\"hidden\" NAME=\"ERROR\" VALUE=\"%d\">"
                    "<INPUT TYPE=\"hidden\" NAME=\"FORMID\" VALUE=\"%d\">"
                    "<INPUT TYPE=\"hidden\" NAME=\"TERMID\" VALUE=\"%d\">"
                    "<INPUT TYPE=\"hidden\" NAME=\"SYNCID\" VALUE=\"%d\">"
                    "<BOLD>An Error Occurred</BOLD><BR><BR>"
                    "%s"
                    "<BR><BR><HR>"
                    "<INPUT TYPE=\"submit\" NAME=\"CMD\" VALUE=\"..NewOrder..\">"
                    "<INPUT TYPE=\"submit\" NAME=\"CMD\" VALUE=\"..Payment..\">"
                    "<INPUT TYPE=\"submit\" NAME=\"CMD\" VALUE=\"..Delivery..\">"
                    "<INPUT TYPE=\"submit\" NAME=\"CMD\" VALUE=\"..Order-Status..\">"
                    "<INPUT TYPE=\"submit\" NAME=\"CMD\" VALUE=\"..Stock-Level..\">"
                    "<INPUT TYPE=\"submit\" NAME=\"CMD\" VALUE=\"..Exit..\">"
                    "</FORM></BODY></HTML>"
                    , iType, iErrorNum, MAIN_MENU_FORM, iTermId, iSyncId, szErrorText );
}

/* FUNCTION: MakeMainMenuForm
 */

void MakeMainMenuForm(int iTermId, int iSyncId, char *szForm)
{
          wsprintf(szForm,
                    "<HTML><HEAD><TITLE>TPC-C Main Menu</TITLE></HEAD><BODY>"
                    "Select Desired Transaction.<BR><HR>"
                    "<FORM ACTION=\"tpcc.dll\" METHOD=\"GET\">"
                    "<INPUT TYPE=\"hidden\" NAME=\"STATUSID\" VALUE=\"0\">"
                    "<INPUT TYPE=\"hidden\" NAME=\"ERROR\" VALUE=\"0\">"
                    "<INPUT TYPE=\"hidden\" NAME=\"FORMID\" VALUE=\"%d\">"
                    "<INPUT TYPE=\"hidden\" NAME=\"TERMID\" VALUE=\"%d\">"
                    "<INPUT TYPE=\"hidden\" NAME=\"SYNCID\" VALUE=\"%d\">"
                    "<INPUT TYPE=\"submit\" NAME=\"CMD\" VALUE=\"..NewOrder..\">"
                    "<INPUT TYPE=\"submit\" NAME=\"CMD\" VALUE=\"..Payment..\">"
                    "<INPUT TYPE=\"submit\" NAME=\"CMD\" VALUE=\"..Delivery..\">"
                    "<INPUT TYPE=\"submit\" NAME=\"CMD\" VALUE=\"..Order-Status..\">"
                    "<INPUT TYPE=\"submit\" NAME=\"CMD\" VALUE=\"..Stock-Level..\">"
                    "<INPUT TYPE=\"submit\" NAME=\"CMD\" VALUE=\"..Exit..\">"
                    "</FORM></BODY></HTML>"
                    , MAIN_MENU_FORM, iTermId, iSyncId);
}

/* FUNCTION: MakeStockLevelForm
 *
 * PURPOSE:         This function constructs the Stock Level HTML page.
 *
 * COMMENTS:        The internal client buffer is created when the terminal id is
assigned and should not
 *                                        be freed except when the client terminal id is no
longer needed.
 */

void MakeStockLevelForm(int iTermId, STOCK_LEVEL_DATA *pStockLevelData, BOOL bInput, char
*szForm)
{
          int       c;

          c = wsprintf(szForm,
                    "<HTML><HEAD><TITLE>TPC-C Stock Level</TITLE></HEAD><FORM
ACTION=\"tpcc.dll\" METHOD=\"GET\">"
                    "<INPUT TYPE=\"hidden\" NAME=\"STATUSID\" VALUE=\"0\">"
                    "<INPUT TYPE=\"hidden\" NAME=\"ERROR\" VALUE=\"0\">"
                    "<INPUT TYPE=\"hidden\" NAME=\"FORMID\" VALUE=\"%d\">"
                    "<INPUT TYPE=\"hidden\" NAME=\"TERMID\" VALUE=\"%d\">"
                    "<INPUT TYPE=\"hidden\" NAME=\"SYNCID\" VALUE=\"%d\">"
                    "<PRE><font face=\"Courier\">                                   Stock-
Level<BR>"
                    "Warehouse: %4.4d   District: %2.2d<BR> <BR>",
                    STOCK_LEVEL_FORM, iTermId, Term.pClientData[iTermId].iSyncId,
                    Term.pClientData[iTermId].w_id, Term.pClientData[iTermId].d_id);

          if ( bInput )
          {
                    strcpy(szForm+c,
                              "Stock Level Threshold: <INPUT NAME=\"TT*\" SIZE=2><BR>
<BR>"
                              "low stock:    </font><BR> <BR> <BR> <BR> <BR> <BR> <BR>
<BR> <BR> <BR>"
                              " <BR> <BR> <BR> <BR> <BR> <BR> <BR></PRE><HR>"
                              "<INPUT TYPE=\"submit\" NAME=\"CMD\" VALUE=\"Process\">"
                              "<INPUT TYPE=\"submit\" NAME=\"CMD\" VALUE=\"Menu\">"
                              "</FORM></HTML>" );
          }
          else
          {
                    wsprintf(szForm+c,
                              "Stock Level Threshold: %2.2d<BR> <BR>"
                              "low stock: %3.3d</font> <BR> <BR> <BR> <BR> <BR> <BR> <BR>
<BR> <BR>"
                              " <BR> <BR> <BR> <BR> <BR> <BR> <BR> <BR></PRE><HR>"
                              "<INPUT TYPE=\"submit\" NAME=\"CMD\"
VALUE=\"..NewOrder..\">"
```

```
                                "<INPUT TYPE=\"submit\" NAME=\"CMD\"
VALUE=\"..Payment..\">"
                                "<INPUT TYPE=\"submit\" NAME=\"CMD\"
VALUE=\"..Delivery..\">"
                                "<INPUT TYPE=\"submit\" NAME=\"CMD\" VALUE=\"..Order-
Status..\">"
                                "<INPUT TYPE=\"submit\" NAME=\"CMD\" VALUE=\"..Stock-
Level..\">"
                                "<INPUT TYPE=\"submit\" NAME=\"CMD\" VALUE=\"..Exit..\">"
                                "</FORM></HTML>"
                                , pStockLevelData->threshold, pStockLevelData->low_stock);
          }
}

/* FUNCTION: MakeNewOrderForm
 *
 * COMMENTS:        The internal client buffer is created when the terminal id is
assigned and should not
 *                                  be freed except when the client terminal id is no
longer needed.
 */

void MakeNewOrderForm(int iTermId, NEW_ORDER_DATA *pNewOrderData, BOOL bInput, char
*szForm)
{
          int                 i, c;
          BOOL      bValid;
          static    char szBR[] = " <BR> <BR> <BR> <BR> <BR> <BR> <BR> <BR> <BR> <BR>
<BR> <BR> <BR> <BR> <BR>";

          if (!bInput)
                    assert( pNewOrderData->exec_status_code == eOK || pNewOrderData-
>exec_status_code == eInvalidItem );

          bValid = (bInput || (pNewOrderData->exec_status_code == eOK));

          c = wsprintf(szForm,
                    "<HTML><HEAD><TITLE>TPC-C New Order</TITLE></HEAD><BODY>"
                    "<FORM ACTION=\"tpcc.dll\" METHOD=\"GET\">"
                    "<INPUT TYPE=\"hidden\" NAME=\"STATUSID\" VALUE=\"%d\">"
                    "<INPUT TYPE=\"hidden\" NAME=\"ERROR\" VALUE=\"0\">"
                    "<INPUT TYPE=\"hidden\" NAME=\"FORMID\" VALUE=\"%d\">"
                    "<INPUT TYPE=\"hidden\" NAME=\"TERMID\" VALUE=\"%d\">"
                    "<INPUT TYPE=\"hidden\" NAME=\"SYNCID\" VALUE=\"%d\">"
                    "<PRE><font face=\"Courier\">                                        New
Order<BR>"
                    , bValid ? 0 : ERR_BAD_ITEM_ID, NEW_ORDER_FORM, iTermId,
Term.pClientData[iTermId].iSyncId);

          if ( bInput )
          {
                    c += wsprintf(szForm+c, "Warehouse: %4.4d   ",
Term.pClientData[iTermId].w_id );

                    strcpy( szForm+c,
                              "District: <INPUT NAME=\"DID*\" SIZE=1>
Date:<BR>"
                              "Customer:  <INPUT NAME=\"CID*\" SIZE=4>   Name:
Credit:      %Disc:<BR>"
                              "Order Number:           Number of Lines:           W_tax:
D_tax:<BR> <BR>"
                              " Supp_W  Item_Id  Item Name                 Qty  Stock
B/G  Price    Amount<BR>"
                              "  <INPUT NAME=\"SP00*\" SIZE=4>  <INPUT NAME=\"IID00*\"
SIZE=6>                         <INPUT NAME=\"Qty00*\" SIZE=1><BR>"
                              "  <INPUT NAME=\"SP01*\" SIZE=4>  <INPUT NAME=\"IID01*\"
SIZE=6>                         <INPUT NAME=\"Qty01*\" SIZE=1><BR>"
                              "  <INPUT NAME=\"SP02*\" SIZE=4>  <INPUT NAME=\"IID02*\"
SIZE=6>                         <INPUT NAME=\"Qty02*\" SIZE=1><BR>"
                              "  <INPUT NAME=\"SP03*\" SIZE=4>  <INPUT NAME=\"IID03*\"
SIZE=6>                         <INPUT NAME=\"Qty03*\" SIZE=1><BR>"
                              "  <INPUT NAME=\"SP04*\" SIZE=4>  <INPUT NAME=\"IID04*\"
SIZE=6>                         <INPUT NAME=\"Qty04*\" SIZE=1><BR>"
                              "  <INPUT NAME=\"SP05*\" SIZE=4>  <INPUT NAME=\"IID05*\"
SIZE=6>                         <INPUT NAME=\"Qty05*\" SIZE=1><BR>"
                              "  <INPUT NAME=\"SP06*\" SIZE=4>  <INPUT NAME=\"IID06*\"
SIZE=6>                         <INPUT NAME=\"Qty06*\" SIZE=1><BR>"
                              "  <INPUT NAME=\"SP07*\" SIZE=4>  <INPUT NAME=\"IID07*\"
SIZE=6>                         <INPUT NAME=\"Qty07*\" SIZE=1><BR>"
                              "  <INPUT NAME=\"SP08*\" SIZE=4>  <INPUT NAME=\"IID08*\"
SIZE=6>                         <INPUT NAME=\"Qty08*\" SIZE=1><BR>"
                              "  <INPUT NAME=\"SP09*\" SIZE=4>  <INPUT NAME=\"IID09*\"
SIZE=6>                         <INPUT NAME=\"Qty09*\" SIZE=1><BR>"
                              "  <INPUT NAME=\"SP10*\" SIZE=4>  <INPUT NAME=\"IID10*\"
SIZE=6>                         <INPUT NAME=\"Qty10*\" SIZE=1><BR>"
                              "  <INPUT NAME=\"SP11*\" SIZE=4>  <INPUT NAME=\"IID11*\"
SIZE=6>                         <INPUT NAME=\"Qty11*\" SIZE=1><BR>"
                              "  <INPUT NAME=\"SP12*\" SIZE=4>  <INPUT NAME=\"IID12*\"
SIZE=6>                         <INPUT NAME=\"Qty12*\" SIZE=1><BR>"
                              "  <INPUT NAME=\"SP13*\" SIZE=4>  <INPUT NAME=\"IID13*\"
SIZE=6>                         <INPUT NAME=\"Qty13*\" SIZE=1><BR>"
                              "  <INPUT NAME=\"SP14*\" SIZE=4>  <INPUT NAME=\"IID14*\"
SIZE=6>                         <INPUT NAME=\"Qty14*\" SIZE=1><BR>"
                              "Execution Status:
Total:<BR>"
                              "</font></PRE><HR>"
                              "<INPUT TYPE=\"submit\" NAME=\"CMD\" VALUE=\"Process\">"
                              "<INPUT TYPE=\"submit\" NAME=\"CMD\" VALUE=\"Menu\">"
                              "</FORM></HTML>"
                              );
          }
          else
          {
                    c += wsprintf(szForm+c, "Warehouse: %4.4d   District: %2.2d
Date: ",
                              pNewOrderData->w_id,
                              pNewOrderData->d_id);

                    if ( bValid )
                    {
                              c += wsprintf(szForm+c, "%2.2d-%2.2d-%4.4d
%2.2d:%2.2d:%2.2d",
                                        pNewOrderData->o_entry_d.day,
                                        pNewOrderData->o_entry_d.month,
                                        pNewOrderData->o_entry_d.year,
                                        pNewOrderData->o_entry_d.hour,
                                        pNewOrderData->o_entry_d.minute,
                                        pNewOrderData->o_entry_d.second);
                    }

                    c += wsprintf(szForm+c, "<BR>Customer:  %4.4d   Name: %-16s   Credit:
%-2s   ",
                              pNewOrderData->c_id, pNewOrderData->c_last, pNewOrderData-
>c_credit);

                    if ( bValid )
```

```
                    {
                              c += sprintf(szForm+c,
                                                        "%%Disc: %5.2f
<BR>"
                                                        "Order Number: %8.8d  Number
of Lines: %2.2d        W_tax: %5.2f   D_tax: %5.2f  <BR> <BR>"
                                                        " Supp_W  Item_Id  Item Name
Qty  Stock  B/G  Price    Amount<BR>",
                                        100.0*pNewOrderData->c_discount,
                                        pNewOrderData->o_id,
                                        pNewOrderData->o_ol_cnt,
                                        100.0 * pNewOrderData->w_tax,
                                        100.0 * pNewOrderData->d_tax);

                              for(i=0; i<pNewOrderData->o_ol_cnt; i++)
                              {
                                        c += sprintf(szForm+c, "  %4.4d   %6.6d   %-24s
%2.2d    %3.3d    %1.1s   $%6.2f  $%7.2f  <BR>",
                                                  pNewOrderData->OL[i].ol_supply_w_id,
                                                  pNewOrderData->OL[i].ol_i_id,
                                                  pNewOrderData->OL[i].ol_i_name,
                                                  pNewOrderData->OL[i].ol_quantity,
                                                  pNewOrderData->OL[i].ol_stock,
                                                  pNewOrderData->OL[i].ol_brand_generic,
                                                  pNewOrderData->OL[i].ol_i_price,
                                                  pNewOrderData->OL[i].ol_amount );
                              }
                    }
                    else
                    {
                              c += wsprintf(szForm+c,
                                        "%Disc:<BR>"
                                        "Order Number: %8.8d  Number of Lines:
W_tax:         D_tax:<BR> <BR>"
                                        " Supp_W  Item_Id  Item Name                 Qty
Stock  B/G  Price    Amount<BR>"
                                        , pNewOrderData->o_id);

                              i = 0;
                    }

                    strncpy( szForm+c, szBR, (15-i)*5 );
                    c += (15-i)*5;

                    if ( bValid )
                              c += sprintf(szForm+c, "Execution Status: Transaction
commited.                      Total:  $%8.2f  ",
                                        pNewOrderData->total_amount);
                    else
                              c += wsprintf(szForm+c, "Execution Status: Item number is
not valid.                  Total:");

                    strcpy(szForm+c,
                              " <BR></font></PRE><HR>"
                              "<INPUT TYPE=\"submit\" NAME=\"CMD\"
VALUE=\"..NewOrder..\">"
                              "<INPUT TYPE=\"submit\" NAME=\"CMD\"
VALUE=\"..Payment..\">"
                              "<INPUT TYPE=\"submit\" NAME=\"CMD\"
VALUE=\"..Delivery..\">"
                              "<INPUT TYPE=\"submit\" NAME=\"CMD\" VALUE=\"..Order-
Status..\">"
                              "<INPUT TYPE=\"submit\" NAME=\"CMD\" VALUE=\"..Stock-
Level..\">"
                              "<INPUT TYPE=\"submit\" NAME=\"CMD\" VALUE=\"..Exit..\">"
                              "</FORM></HTML>"
                              );
          }
}

/* FUNCTION: MakePaymentForm
 *
 * COMMENTS:        The internal client buffer is created when the terminal id is
assigned and should not
 *                                  be freed except when the client terminal id is no
longer needed.
 */

void MakePaymentForm(int iTermId, PAYMENT_DATA *pPaymentData, BOOL bInput, char *szForm)
{
          int c;

          c = wsprintf(szForm,
                    "<HTML><HEAD><TITLE>TPC-C Payment</TITLE></HEAD><BODY>"
                    "<FORM ACTION=\"tpcc.dll\" METHOD=\"GET\">"
                    "<INPUT TYPE=\"hidden\" NAME=\"STATUSID\" VALUE=\"0\">"
                    "<INPUT TYPE=\"hidden\" NAME=\"ERROR\" VALUE=\"0\">"
                    "<INPUT TYPE=\"hidden\" NAME=\"FORMID\" VALUE=\"%d\">"
                    "<INPUT TYPE=\"hidden\" NAME=\"TERMID\" VALUE=\"%d\">"
                    "<INPUT TYPE=\"hidden\" NAME=\"SYNCID\" VALUE=\"%d\">"
                    "<PRE><font face=\"Courier\">
Payment<BR>"
                    "Date: "
                    , PAYMENT_FORM, iTermId, Term.pClientData[iTermId].iSyncId);

          if ( !bInput )
          {
                    c += wsprintf(szForm+c, "%2.2d-%2.2d-%4.4d %2.2d:%2.2d:%2.2d",
                              pPaymentData->h_date.day,
                              pPaymentData->h_date.month,
                              pPaymentData->h_date.year,
                              pPaymentData->h_date.hour,
                              pPaymentData->h_date.minute,
                              pPaymentData->h_date.second);
          }

          if ( bInput )
          {
                    c += wsprintf(szForm+c,
                              "<BR> <BR>Warehouse: %4.4d"
                              "                                District: <INPUT NAME=\"DID*\"
SIZE=1><BR> <BR> <BR> <BR> <BR>"
                              "Customer: <INPUT NAME=\"CID*\" SIZE=4>"
                              "Cust-Warehouse: <INPUT NAME=\"CWI*\" SIZE=4>  "
                              "Cust-District: <INPUT NAME=\"CDI*\" SIZE=1><BR>"
                              "Name:                        <INPUT NAME=\"CLT*\" SIZE=16>
Since:<BR>"
                              "
Credit:<BR>"
                              "
Disc:<BR>"
                              "
Phone:<BR> <BR>"
                              "Amount Paid:          $<INPUT NAME=\"HAM*\" SIZE=7>
New Cust-Balance:<BR>"
```

```
                                "Credit Limit:<BR> <BR>Cust-Data: <BR> <BR> <BR> <BR>
<BR></font></PRE><HR>"
                                "<INPUT TYPE=\"submit\" NAME=\"CMD\"
VALUE=\"Process\"><INPUT TYPE=\"submit\" NAME=\"CMD\" VALUE=\"Menu\">"
                                "</BODY></FORM></HTML>"
                                , Term.pClientData[iTermId].w_id);
          }
          else
          {
                    c += wsprintf(szForm+c,
                                "<BR> <BR>Warehouse: %4.4d
District: %2.2d<BR>"
                                "%-20s                      %-20s<BR>"
                                "%-20s                      %-20s<BR>"
                                "%-20s %-2s %5.5s-%4.4s       %-20s %-2s %5.5s-%4.4s<BR>
<BR>"
                                "Customer: %4.4d  Cust-Warehouse: %4.4d  Cust-District:
%2.2d<BR>"
                                "Name:   %-16s %-2s %-16s     Since:  %2.2d-%2.2d-
%4.4d<BR>"
                                "        %-20s                      Credit: %-2s<BR>"

                                , Term.pClientData[iTermId].w_id, pPaymentData->d_id
                                , pPaymentData->w_street_1, pPaymentData->d_street_1
                                , pPaymentData->w_street_2, pPaymentData->d_street_2
                                , pPaymentData->w_city, pPaymentData->w_state,
pPaymentData->w_zip, pPaymentData->w_zip+5
                                , pPaymentData->d_city, pPaymentData->d_state,
pPaymentData->d_zip, pPaymentData->d_zip+5
                                , pPaymentData->c_id, pPaymentData->c_w_id,
          pPaymentData->c_d_id
                                , pPaymentData->c_first, pPaymentData->c_middle,
pPaymentData->c_last
                                , pPaymentData->c_since.day, pPaymentData->c_since.month,
          pPaymentData->c_since.year
                                , pPaymentData->c_street_1, pPaymentData->c_credit
                                );

        c += sprintf(szForm+c,
                                "        %-20s                      %%Disc:  %5.2f<BR>",
                                pPaymentData->c_street_2, 100.0*pPaymentData->c_discount);

                    c += wsprintf(szForm+c,
                                "        %-20s %-2s %5.5s-%4.4s       Phone:  %6.6s-%3.3s-
%3.3s-%4.4s<BR> <BR>",
                                pPaymentData->c_city, pPaymentData->c_state, pPaymentData-
>c_zip, pPaymentData->c_zip+5,
                                pPaymentData->c_phone, pPaymentData->c_phone+6,
pPaymentData->c_phone+9, pPaymentData->c_phone+12 );

                    c += sprintf(szForm+c,
                                "Amount Paid:          $%7.2f      New Cust-Balance:
$%14.2f<BR>"
                                "Credit Limit:   $%13.2f<BR> <BR>"
                                , pPaymentData->h_amount, pPaymentData->c_balance
                                , pPaymentData->c_credit_lim
                                );

                    if ( pPaymentData->c_credit[0] == 'B' && pPaymentData->c_credit[1] ==
'C' )
                                c += wsprintf(szForm+c,
                                                "Cust-Data: %-50.50s<BR>           %-
50.50s<BR>           %-50.50s<BR>           %-50.50s<BR>",
                                                pPaymentData->c_data, pPaymentData-
>c_data+50, pPaymentData->c_data+100, pPaymentData->c_data+150 );
                                else
                                          strcpy(szForm+c, "Cust-Data: <BR> <BR> <BR> <BR>");

                                strcat(szForm,      " <BR></font></PRE><HR>"
                                                                "<INPUT TYPE=\"submit\"
NAME=\"CMD\" VALUE=\"..NewOrder..\">"
                                                                "<INPUT TYPE=\"submit\"
NAME=\"CMD\" VALUE=\"..Payment..\">"
                                                                "<INPUT TYPE=\"submit\"
NAME=\"CMD\" VALUE=\"..Delivery..\">"
                                                                "<INPUT TYPE=\"submit\"
NAME=\"CMD\" VALUE=\"..Order-Status..\">"
                                                                "<INPUT TYPE=\"submit\"
NAME=\"CMD\" VALUE=\"..Stock-Level..\">"
                                                                "<INPUT TYPE=\"submit\"
NAME=\"CMD\" VALUE=\"..Exit..\">"
                                                                "</BODY></FORM></HTML>");
          }

}

/* FUNCTION: MakeOrderStatusForm
 *
 * COMMENTS:        The internal client buffer is created when the terminal id is
assigned and should not
 *                                        be freed except when the client terminal id is no
longer needed.
 */

void MakeOrderStatusForm(int iTermId, ORDER_STATUS_DATA *pOrderStatusData, BOOL bInput,
char *szForm)
{
          int                 i, c;
          static char szBR[] = " <BR> <BR> <BR> <BR> <BR> <BR> <BR> <BR> <BR> <BR> <BR>
<BR> <BR> <BR> <BR>";

          c = wsprintf(szForm,
                    "<HTML><HEAD><TITLE>TPC-C Order-Status</TITLE></HEAD><BODY>"
                    "<FORM ACTION=\"tpcc.dll\" METHOD=\"GET\">"
                    "<INPUT TYPE=\"hidden\" NAME=\"STATUSID\" VALUE=\"0\">"
                    "<INPUT TYPE=\"hidden\" NAME=\"ERROR\" VALUE=\"0\">"
                    "<INPUT TYPE=\"hidden\" NAME=\"FORMID\" VALUE=\"%d\">"
                    "<INPUT TYPE=\"hidden\" NAME=\"TERMID\" VALUE=\"%d\">"
                    "<INPUT TYPE=\"hidden\" NAME=\"SYNCID\" VALUE=\"%d\">"
                    "<PRE><font face=\"Courier\">                                        Order-
Status<BR>"
                    "Warehouse: %4.4d   ",
                    ORDER_STATUS_FORM, iTermId, Term.pClientData[iTermId].iSyncId,
Term.pClientData[iTermId].w_id);

          if ( bInput )
          {
                    strcpy(szForm+c,
                              "District: <INPUT NAME=\"DID*\" SIZE=1><BR>"
                              "Customer: <INPUT NAME=\"CID*\" SIZE=4>   Name:
<INPUT NAME=\"CLT*\" SIZE=23><BR>"
                              "Cust-Balance:<BR> <BR>"
                              "Order-Number:            Entry-Date:
Carrier-Number:<BR>"
                              "Supply-W     Item-Id    Qty     Amount      Delivery-
Date<BR> <BR> <BR> <BR> <BR>"
```

```
                                " <BR> <BR> <BR> <BR> <BR> <BR> <BR> <BR> <BR> <BR>
<BR></font></PRE>"
                                "<HR><INPUT TYPE=\"submit\" NAME=\"CMD\"
VALUE=\"Process\"><INPUT TYPE=\"submit\" NAME=\"CMD\" VALUE=\"Menu\">"
                                "</BODY></FORM></HTML>" );
          }
          else
          {
                    c += wsprintf(szForm+c,
                                "District: %2.2d<BR>"
                                "Customer: %4.4d   Name: %-16s %-2s %-16s<BR>",
                                pOrderStatusData->d_id, pOrderStatusData->c_id,
                                pOrderStatusData->c_first, pOrderStatusData->c_middle,
pOrderStatusData->c_last);

                    c += sprintf(szForm+c, "Cust-Balance: $%9.2f<BR> <BR>",
                                pOrderStatusData->c_balance);

                    c += wsprintf(szForm+c,
                                "Order-Number: %8.8d   Entry-Date: %2.2d-%2.2d-%4.4d
%2.2d:%2.2d:%2.2d   Carrier-Number: %2.2d<BR>"
                                "Supply-W     Item-Id    Qty     Amount      Delivery-
Date<BR>",
                                pOrderStatusData->o_id,
                                pOrderStatusData->o_entry_d.day,
                                pOrderStatusData->o_entry_d.month,
                                pOrderStatusData->o_entry_d.year,
                                pOrderStatusData->o_entry_d.hour,
                                pOrderStatusData->o_entry_d.minute,
                                pOrderStatusData->o_entry_d.second,
                                pOrderStatusData->o_carrier_id);

                    for(i=0; i< pOrderStatusData->o_ol_cnt; i++)
                    {
                                c += sprintf(szForm+c, "  %4.4d       %6.6d     %2.2d
$%8.2f      %2.2d-%2.2d-%4.4d<BR>",
                                          pOrderStatusData->OL[i].ol_supply_w_id,
                                          pOrderStatusData->OL[i].ol_i_id,
                                          pOrderStatusData->OL[i].ol_quantity,
                                          pOrderStatusData->OL[i].ol_amount,
                                          pOrderStatusData->OL[i].ol_delivery_d.day,
                                          pOrderStatusData->OL[i].ol_delivery_d.month,
                                          pOrderStatusData->OL[i].ol_delivery_d.year);
                    }

                    strncpy( szForm+c, szBR, (15-i)*5 );
                    c += (15-i)*5;

                    strcpy(szForm+c,
                                "</font></PRE><HR><INPUT TYPE=\"submit\" NAME=\"CMD\"
VALUE=\"..NewOrder..\">"
                                "<INPUT TYPE=\"submit\" NAME=\"CMD\"
VALUE=\"..Payment..\">"
                                "<INPUT TYPE=\"submit\" NAME=\"CMD\"
VALUE=\"..Delivery..\">"
                                "<INPUT TYPE=\"submit\" NAME=\"CMD\" VALUE=\"..Order-
Status..\">"
                                "<INPUT TYPE=\"submit\" NAME=\"CMD\" VALUE=\"..Stock-
Level..\">"
                                "<INPUT TYPE=\"submit\" NAME=\"CMD\" VALUE=\"..Exit..\">"
                                "</BODY></FORM></HTML>" );
          }
}
```

```
/* FUNCTION: MakeDeliveryForm
 *
 * COMMENTS:        The internal client buffer is created when the terminal id is
assigned and should not
 *                                        be freed except when the client terminal id is no
longer needed.
 */

void MakeDeliveryForm(int iTermId, DELIVERY_DATA *pDeliveryData, BOOL bInput, char
*szForm)
{
          int       c;

          c = wsprintf(szForm,
                    "<HTML><HEAD><TITLE>TPC-C Delivery</TITLE></HEAD><BODY>"
                    "<FORM ACTION=\"tpcc.dll\" METHOD=\"GET\">"
                    "<INPUT TYPE=\"hidden\" NAME=\"STATUSID\" VALUE=\"%d\">"
                    "<INPUT TYPE=\"hidden\" NAME=\"ERROR\" VALUE=\"0\">"
                    "<INPUT TYPE=\"hidden\" NAME=\"FORMID\" VALUE=\"%d\">"
                    "<INPUT TYPE=\"hidden\" NAME=\"TERMID\" VALUE=\"%d\">"
                    "<INPUT TYPE=\"hidden\" NAME=\"SYNCID\" VALUE=\"%d\">"
                    "<PRE><font face=\"Courier\">
Delivery<BR>"
                    "Warehouse: %4.4d<BR> <BR>",
                    (!bInput && (pDeliveryData->exec_status_code != eOK)) ?
ERR_TYPE_DELIVERY_POST : 0,
                    DELIVERY_FORM, iTermId, Term.pClientData[iTermId].iSyncId,
Term.pClientData[iTermId].w_id);

          if ( bInput )
          {
                    strcpy( szForm+c,
                              "Carrier Number: <INPUT NAME=\"OCD*\" SIZE=1><BR> <BR>"
                              "Execution Status: <BR> <BR> <BR> <BR> <BR> <BR> <BR> <BR>"
                              " <BR> <BR> <BR> <BR> <BR> <BR> <BR> <BR>
</font></PRE><HR>"
                              "<INPUT TYPE=\"submit\" NAME=\"CMD\" VALUE=\"Process\">"
                              "<INPUT TYPE=\"submit\" NAME=\"CMD\" VALUE=\"Menu\">"
                              "</BODY></FORM></HTML>" );
          }
          else
          {
                    wsprintf( szForm+c,
                              "Carrier Number: %2.2d<BR> <BR>"
                              "Execution Status: %s <BR> <BR> <BR> <BR> <BR> <BR> <BR>
<BR>"
                              " <BR> <BR> <BR> <BR> <BR> <BR> <BR> <BR> </font></PRE>"
                              "<HR><INPUT TYPE=\"submit\" NAME=\"CMD\"
VALUE=\"..NewOrder..\">"
                              "<INPUT TYPE=\"submit\" NAME=\"CMD\"
VALUE=\"..Payment..\">"
                              "<INPUT TYPE=\"submit\" NAME=\"CMD\"
VALUE=\"..Delivery..\">"
                              "<INPUT TYPE=\"submit\" NAME=\"CMD\" VALUE=\"..Order-
Status..\">"
                              "<INPUT TYPE=\"submit\" NAME=\"CMD\" VALUE=\"..Stock-
Level..\">"
                              "<INPUT TYPE=\"submit\" NAME=\"CMD\" VALUE=\"..Exit..\">"
                              "</BODY></FORM></HTML>"

                              , pDeliveryData->o_carrier_id,
```

```
                              (pDeliveryData->exec_status_code == eOK) ? "Delivery has
been queued." : "Delivery Post Failed     "
                              );
          }
}

/* FUNCTION: ProcessNewOrderForm
 *
 * PURPOSE:         This function gets and validates the input data from the new order
form
 *                            filling in the required input variables. it then calls the
SQLNewOrder
 *                            transaction, constructs the output form and writes it back
to client
 *                            browser.
 */

void ProcessNewOrderForm(EXTENSION_CONTROL_BLOCK  *pECB, int iTermId, char *szBuffer)
{
          PNEW_ORDER_DATA               pNewOrder;

          pNewOrder = Term.pClientData[iTermId].pTxn->BuffAddr_NewOrder();

          ZeroMemory(pNewOrder, sizeof(NEW_ORDER_DATA));
          pNewOrder->w_id = Term.pClientData[iTermId].w_id;
          GetNewOrderData(pECB->lpszQueryString, pNewOrder);

          Term.pClientData[iTermId].pTxn->NewOrder();

          pNewOrder = Term.pClientData[iTermId].pTxn->BuffAddr_NewOrder();
          MakeNewOrderForm(iTermId, pNewOrder, OUTPUT_FORM, szBuffer );
}

/* FUNCTION: void ProcessPaymentForm
 *
 * PURPOSE:         This function gets and validates the input data from the payment form
 *                            filling in the required input variables. It then calls the
SQLPayment
 *                            transaction, constructs the output form and writes it back
to client
 *                            browser.
 *
 * ARGUMENTS:       EXTENSION_CONTROL_BLOCK       *pECB     passed in structure pointer
from inetsrv.
 *                                       int
          iTermId   client browser terminal id
 *
 */

void ProcessPaymentForm(EXTENSION_CONTROL_BLOCK *pECB, int iTermId, char *szBuffer)
{
          PPAYMENT_DATA       pPayment;

          pPayment = Term.pClientData[iTermId].pTxn->BuffAddr_Payment();
          ZeroMemory(pPayment, sizeof(PAYMENT_DATA));
          pPayment->w_id = Term.pClientData[iTermId].w_id;
          GetPaymentData(pECB->lpszQueryString, pPayment);

          Term.pClientData[iTermId].pTxn->Payment();

          pPayment = Term.pClientData[iTermId].pTxn->BuffAddr_Payment();
          MakePaymentForm(iTermId, pPayment, OUTPUT_FORM, szBuffer);
}

/* FUNCTION: ProcessOrderStatusForm
 *
 * PURPOSE:         This function gets and validates the input data from the Order Status
 *                            form filling in the required input variables. It then calls
the
 *                            SQLOrderStatus transaction, constructs the output form and
writes it
 *                            back to client browser.
 *
 * ARGUMENTS:       EXTENSION_CONTROL_BLOCK       *pECB     passed in structure pointer
from inetsrv.
 *                                       int
          iTermId   client browser terminal id
 *
 */

void ProcessOrderStatusForm(EXTENSION_CONTROL_BLOCK *pECB, int iTermId, char *szBuffer)
{
          PORDER_STATUS_DATA  pOrderStatus;

          pOrderStatus = Term.pClientData[iTermId].pTxn->BuffAddr_OrderStatus();
          ZeroMemory(pOrderStatus, sizeof(ORDER_STATUS_DATA));
          pOrderStatus->w_id = Term.pClientData[iTermId].w_id;
          GetOrderStatusData(pECB->lpszQueryString, pOrderStatus);

          Term.pClientData[iTermId].pTxn->OrderStatus();

          pOrderStatus = Term.pClientData[iTermId].pTxn->BuffAddr_OrderStatus();
          MakeOrderStatusForm(iTermId, pOrderStatus, OUTPUT_FORM, szBuffer);
}

/* FUNCTION: ProcessDeliveryForm
 *
 * PURPOSE:         This function gets and validates the input data from the delivery
form
 *                            filling in the required input variables. It then calls the
PostDeliveryInfo
 *                            Api, The client is then informed that the transaction has
been posted.
 *
 * ARGUMENTS:       EXTENSION_CONTROL_BLOCK       *pECB     passed in structure pointer
from inetsrv.
 *                                       int
          iTermId   client browser terminal id
 *
 */

void ProcessDeliveryForm(EXTENSION_CONTROL_BLOCK *pECB, int iTermId, char *szBuffer)
{
          char      *ptr = pECB->lpszQueryString;

          PDELIVERY_DATA      pDelivery;

          pDelivery = Term.pClientData[iTermId].pTxn->BuffAddr_Delivery();
          ZeroMemory(pDelivery, sizeof(DELIVERY_DATA));
          pDelivery->w_id = Term.pClientData[iTermId].w_id;

          pDelivery->o_carrier_id       = GetIntKeyValue(&ptr, "OCD*",
ERR_DELIVERY_MISSING_OCD_KEY, ERR_DELIVERY_CARRIER_INVALID);
          if ( pDelivery->o_carrier_id > 10 || pDelivery->o_carrier_id < 1 )
                    throw new CWEBCLNT_ERR( ERR_DELIVERY_CARRIER_ID_RANGE );
```

```
	if (dwNumDeliveryThreads)
	{
		//post delivery info
		if ( PostDeliveryInfo(pDelivery->w_id, pDelivery->o_carrier_id) )
			pDelivery->exec_status_code = eDeliveryFailed;
		else
			pDelivery->exec_status_code = eOK;
	}
	else // delivery is done synchronously if no delivery threads configured
		Term.pClientData[iTermId].pTxn->Delivery();

	pDelivery = Term.pClientData[iTermId].pTxn->BuffAddr_Delivery();
	MakeDeliveryForm(iTermId, pDelivery, OUTPUT_FORM, szBuffer);
}

/* FUNCTION: ProcessStockLevelForm
 *
 * PURPOSE:		This function gets and validates the input data from the Stock Level
 *			form filling in the required input variables. It then calls
the
 *			SQLStockLevel transaction, constructs the output form and
writes it
 *			back to client browser.
 *
 * ARGUMENTS:	EXTENSION_CONTROL_BLOCK	*pECB	passed in structure pointer
from inetsrv.
 *
	iTermId	client browser terminal id
 *
 */

void ProcessStockLevelForm(EXTENSION_CONTROL_BLOCK *pECB, int iTermId, char *szBuffer)
{
	char		*ptr = pECB->lpszQueryString;

	PSTOCK_LEVEL_DATA	pStockLevel;

	pStockLevel = Term.pClientData[iTermId].pTxn->BuffAddr_StockLevel();
	ZeroMemory( pStockLevel, sizeof(STOCK_LEVEL_DATA) );

	pStockLevel->w_id = Term.pClientData[iTermId].w_id;
	pStockLevel->d_id = Term.pClientData[iTermId].d_id;

	pStockLevel->threshold = GetIntKeyValue(&ptr, "TT*",
ERR_STOCKLEVEL_MISSING_THRESHOLD_KEY, ERR_STOCKLEVEL_THRESHOLD_INVALID);
	if ( pStockLevel->threshold >= 100 || pStockLevel->threshold < 0 )
		throw new CWEBCLNT_ERR( ERR_STOCKLEVEL_THRESHOLD_RANGE );

	Term.pClientData[iTermId].pTxn->StockLevel();

	pStockLevel = Term.pClientData[iTermId].pTxn->BuffAddr_StockLevel();
	MakeStockLevelForm(iTermId, pStockLevel, OUTPUT_FORM, szBuffer);
}

/* FUNCTION: GetNewOrderData
 *
 * PURPOSE:		This function extracts and validates the new order form data from an
http command string.
 *
 * ARGUMENTS:	LPSTR		lpszQueryString		client
browser http command string
 *		NEW_ORDER_DATA	*pNewOrderData
	pointer to new order data structure
 *
 */

void GetNewOrderData(LPSTR lpszQueryString, NEW_ORDER_DATA *pNewOrderData)
{
	char	szTmp[26];
	int		i;
	short	items;
	int		ol_i_id, ol_quantity;
	char	*ptr = lpszQueryString;

	static char szSP[MAX_OL_NEW_ORDER_ITEMS][6] =
		{ "SP00*", "SP01*", "SP02*", "SP03*", "SP04*",
		  "SP05*", "SP06*", "SP07*", "SP08*", "SP09*",
		  "SP10*", "SP11*", "SP12*", "SP13*", "SP14*" };
	static char szIID[MAX_OL_NEW_ORDER_ITEMS][7] =
		{ "IID00*", "IID01*", "IID02*", "IID03*", "IID04*",
		  "IID05*", "IID06*", "IID07*", "IID08*", "IID09*",
		  "IID10*", "IID11*", "IID12*", "IID13*", "IID14*" };
	static char szQty[MAX_OL_NEW_ORDER_ITEMS][7] =
		{ "Qty00*", "Qty01*", "Qty02*", "Qty03*", "Qty04*",
		  "Qty05*", "Qty06*", "Qty07*", "Qty08*", "Qty09*",
		  "Qty10*", "Qty11*", "Qty12*", "Qty13*", "Qty14*" };

	pNewOrderData->d_id = GetIntKeyValue(&ptr, "DID*",
ERR_NEWORDER_FORM_MISSING_DID, ERR_NEWORDER_DISTRICT_INVALID);
	pNewOrderData->c_id = GetIntKeyValue(&ptr, "CID*", ERR_NEWORDER_CUSTOMER_KEY,
ERR_NEWORDER_CUSTOMER_INVALID);

	for(i=0, items=0; i<MAX_OL_NEW_ORDER_ITEMS; i++)
	{
		GetKeyValue(&ptr, szSP[i], szTmp, sizeof(szTmp),
ERR_NEWORDER_MISSING_SUPPW_KEY);
		if ( szTmp[0] )
		{
			if ( !IsNumeric(szTmp) )
				throw new CWEBCLNT_ERR(
ERR_NEWORDER_SUPPW_INVALID );
			pNewOrderData->OL[items].ol_supply_w_id =
(short)atoi(szTmp);

			ol_i_id = pNewOrderData->OL[items].ol_i_id =
				GetIntKeyValue(&ptr, szIID[i],
ERR_NEWORDER_MISSING_IID_KEY, ERR_NEWORDER_ITEMID_INVALID);
			if ( ol_i_id > 999999 || ol_i_id < 1 )
				throw new CWEBCLNT_ERR( ERR_NEWORDER_ITEMID_RANGE
);

			ol_quantity = pNewOrderData->OL[items].ol_quantity =
				GetIntKeyValue(&ptr, szQty[i],
ERR_NEWORDER_MISSING_QTY_KEY, ERR_NEWORDER_QTY_INVALID);
			if ( ol_quantity > 99 || ol_quantity < 1 )
				throw new CWEBCLNT_ERR( ERR_NEWORDER_QTY_RANGE );

			items++;
		}
		else
		{	// nothing entered for supply warehouse, so item id and qty
must also be blank
			GetKeyValue(&ptr, szIID[i], szTmp, sizeof(szTmp),
ERR_NEWORDER_MISSING_IID_KEY);
			if ( szTmp[0] )
```


Copyright Dell

```
                                        throw new CWEBCLNT_ERR(
ERR_NEWORDER_ITEMID_WITHOUT_SUPPW );

                                GetKeyValue(&ptr, szQty[i], szTmp, sizeof(szTmp),
ERR_NEWORDER_MISSING_QTY_KEY);
                                if ( szTmp[0] )
                                        throw new CWEBCLNT_ERR(
ERR_NEWORDER_QTY_WITHOUT_SUPPW );
                        }
                }
                if ( items == 0 )
                        throw new CWEBCLNT_ERR( ERR_NEWORDER_NOITEMS_ENTERED );

                pNewOrderData->o_ol_cnt = items;
}

/* FUNCTION: GetPaymentData
 *
 * PURPOSE:         This function extracts and validates the payment form data from an
http command string.
 *
 * ARGUMENTS:       LPSTR                           lpszQueryString               client
browser http command string
 *                                      PAYMENT_DATA        *pPaymentData
                pointer to payment data structure
 */

void GetPaymentData(LPSTR lpszQueryString, PAYMENT_DATA *pPaymentData)
{
                char      szTmp[26];
                char      *ptr = lpszQueryString;
                BOOL      bCustIdBlank;

                pPaymentData->d_id = GetIntKeyValue(&ptr, "DID*", ERR_PAYMENT_MISSING_DID_KEY,
ERR_PAYMENT_DISTRICT_INVALID);

                GetKeyValue(&ptr, "CID*", szTmp, sizeof(szTmp), ERR_PAYMENT_MISSING_CID_KEY);
                if ( szTmp[0] == 0 )
                {
                        bCustIdBlank = TRUE;
                        pPaymentData->c_id = 0;
                }
                else
                {       // parse customer id and verify that last name was NOT entered
                        bCustIdBlank = FALSE;
                        if ( !IsNumeric(szTmp) )
                                throw new CWEBCLNT_ERR( ERR_PAYMENT_CUSTOMER_INVALID );
                        pPaymentData->c_id = atoi(szTmp);
                }

                pPaymentData->c_w_id = GetIntKeyValue(&ptr, "CWI*",
ERR_PAYMENT_MISSING_CWI_KEY, ERR_PAYMENT_CWI_INVALID);
                pPaymentData->c_d_id = GetIntKeyValue(&ptr, "CDI*",
ERR_PAYMENT_MISSING_CDI_KEY, ERR_PAYMENT_CDI_INVALID);

                if ( bCustIdBlank )
                {       // customer id is blank, so last name must be entered
                        GetKeyValue(&ptr, "CLT*", szTmp, sizeof(szTmp),
ERR_PAYMENT_MISSING_CLT_KEY);
                        if ( szTmp[0] == 0 )
                                throw new CWEBCLNT_ERR( ERR_PAYMENT_MISSING_CID_CLT );

                        _strupr( szTmp );
                        if ( strlen(pPaymentData->c_last) > LAST_NAME_LEN )
                                throw new CWEBCLNT_ERR( ERR_PAYMENT_LAST_NAME_TO_LONG );
                        strcpy(pPaymentData->c_last, szTmp);
                }
                else
                {       // parse customer id and verify that last name was NOT entered
                        GetKeyValue(&ptr, "CLT*", szTmp, sizeof(szTmp),
ERR_PAYMENT_MISSING_CLT_KEY);
                        if ( szTmp[0] != 0 )
                                throw new CWEBCLNT_ERR( ERR_PAYMENT_CID_AND_CLT );
                }

                GetKeyValue(&ptr, "HAM*", szTmp, sizeof(szTmp), ERR_PAYMENT_MISSING_HAM_KEY);
                if (!IsDecimal(szTmp))
                        throw new CWEBCLNT_ERR( ERR_PAYMENT_HAM_INVALID );
                pPaymentData->h_amount = atof(szTmp);
                if ( pPaymentData->h_amount >= 10000.00 || pPaymentData->h_amount < 0 )
                        throw new CWEBCLNT_ERR( ERR_PAYMENT_HAM_RANGE );
}

/* FUNCTION: GetOrderStatusData
 *
 * PURPOSE:         This function extracts and validates the payment form data from an
http command string.
 *
 */
void GetOrderStatusData(LPSTR lpszQueryString, ORDER_STATUS_DATA *pOrderStatusData)
{
                char      szTmp[26];
                char      *ptr = lpszQueryString;

                pOrderStatusData->d_id = GetIntKeyValue(&ptr, "DID*",
ERR_ORDERSTATUS_MISSING_DID_KEY, ERR_ORDERSTATUS_DID_INVALID);

                GetKeyValue(&ptr, "CID*", szTmp, sizeof(szTmp),
ERR_ORDERSTATUS_MISSING_CID_KEY);
                if ( szTmp[0] == 0 )
                {       // customer id is blank, so last name must be entered
                        pOrderStatusData->c_id = 0;
                        GetKeyValue(&ptr, "CLT*", szTmp, sizeof(szTmp),
ERR_ORDERSTATUS_MISSING_CLT_KEY);
                        if ( szTmp[0] == 0 )
                                throw new CWEBCLNT_ERR( ERR_ORDERSTATUS_MISSING_CID_CLT );

                        _strupr( szTmp );
                        if ( strlen(pOrderStatusData->c_last) > LAST_NAME_LEN )
                                throw new CWEBCLNT_ERR( ERR_ORDERSTATUS_CLT_RANGE );
                        strcpy(pOrderStatusData->c_last, szTmp);
                }
                else
                {       // parse customer id and verify that last name was NOT entered
                        if ( !IsNumeric(szTmp) )
                                throw new CWEBCLNT_ERR( ERR_ORDERSTATUS_CID_INVALID );
                        pOrderStatusData->c_id = atoi(szTmp);
                        GetKeyValue(&ptr, "CLT*", szTmp, sizeof(szTmp),
ERR_ORDERSTATUS_MISSING_CLT_KEY);
                        if ( szTmp[0] != 0 )
                                throw new CWEBCLNT_ERR( ERR_ORDERSTATUS_CID_AND_CLT );
                }

}

/* FUNCTION: BOOL IsNumeric(char *ptr)
```

```
 *
 * PURPOSE:         This function determines if a string is numeric. It fails if any
characters other
 *                          than numeric and null terminator are present.
 *
 * ARGUMENTS:       char                        *ptr      pointer to string to check.
 *
 * RETURNS:                  BOOL      FALSE     if string is not all numeric
 *                                                     TRUE      if string contains
only numeric characters i.e. '0' - '9'
 */

BOOL IsNumeric(char *ptr)
{
          if ( *ptr == 0 )
                    return FALSE;

          while( *ptr && isdigit(*ptr) )
                    ptr++;
          return ( !*ptr );
}

/* FUNCTION: BOOL IsDecimal(char *ptr)
 *
 * PURPOSE:         This function determines if a string is a non-negative decimal value.
 *          It fails if any characters other than a series of numbers followed by
 *                          a decimal point, another series of numbers, and a null
terminator are present.
 *
 * ARGUMENTS:       char                        *ptr      pointer to string to check.
 *
 * RETURNS:                  BOOL      FALSE     if string is not a valid non-negative
decimal value
 *                                                     TRUE      if string is OK
 */

BOOL IsDecimal(char *ptr)
{
          char *dotptr;
          BOOL  bValid;

          if ( *ptr == 0 )
                    return FALSE;

          // find decimal point
          dotptr = strchr( ptr, '.' );
          if (dotptr == NULL)
                    // no decimal point, so just check for numeric
                    return IsNumeric(ptr);
          *dotptr = 0;  // temporarily replace decimal with a terminator

          if ( *ptr != 0 )
                    bValid = IsNumeric(ptr);
          // string starts with decimal point
          else if (*(dotptr+1) == 0)
                    return FALSE;  // nothing but a decimal point is bad
          else
                    bValid = TRUE;

          if (*(dotptr+1) != 0)
                    // check text after decimal point
                    bValid &= IsNumeric(dotptr+1);
          *dotptr = '.';  // replace decimal point
          return bValid;
}
```

isapi_dll/src/resource.h

```
//{{NO_DEPENDENCIES}}
// Microsoft Developer Studio generated include file.
// Used by tpcc.rc
//
#define IDD_DIALOG1                     101

// Next default values for new objects
//
#ifdef APSTUDIO_INVOKED
#ifndef APSTUDIO_READONLY_SYMBOLS
#define _APS_NEXT_RESOURCE_VALUE        102
#define _APS_NEXT_COMMAND_VALUE         40001
#define _APS_NEXT_CONTROL_VALUE         1000
#define _APS_NEXT_SYMED_VALUE           101
#endif
#endif
```

common/src/ReadRegistry.cpp

```
/*        FILE:               READREGISTRY.CPP
 *                                    Microsoft TPC-C Kit Ver. 4.20.000
 *                                    Copyright Microsoft, 1999
 *              All Rights Reserved
 *
 *                                    not yet audited
 *
 *        PURPOSE:  Implementation for TPC-C Tuxedo class.
 *        Contact:  Charles Levine (clevine@microsoft.com)
 *
 *  Change history:
 *                  4.20.000 - first version
 */


/* FUNCTION: ReadTPCCRegistrySettings
 *
 * PURPOSE:         This function reads the NT registry for startup parameters. There
parameters are
 *                            under the TPCC key.
 *
 * RETURNS          FALSE = no errors
 *                            TRUE  = error reading registry
 */
BOOL ReadTPCCRegistrySettings( TPCCREGISTRYDATA *pReg )
{
          HKEY      hKey;
          DWORD     size;
          DWORD     type;
          DWORD     dwTmp;
```

```
	char	szTmp[256];

	if ( RegOpenKeyEx(HKEY_LOCAL_MACHINE, "SOFTWARE\\Microsoft\\TPCC", 0, KEY_READ,
&hKey) != ERROR_SUCCESS )
		return TRUE;

	// determine database protocol to use; may be either ODBC or DBLIB
	pReg->eDB_Protocol = Unspecified;
	size = sizeof(szTmp);
	if ( RegQueryValueEx(hKey, "DB_Protocol", 0, &type, (BYTE *)&szTmp, &size) ==
ERROR_SUCCESS )
	{
		if ( !stricmp(szTmp, szDBNames[ODBC]) )
			pReg->eDB_Protocol = ODBC;
		else if ( !stricmp(szTmp, szDBNames[DBLIB]) )
			pReg->eDB_Protocol = DBLIB;
	}

	pReg->eTxnMon = None;
	// determine txn monitor to use; may be either TUXEDO, or blank
	size = sizeof(szTmp);
	if ( RegQueryValueEx(hKey, "TxnMonitor", 0, &type, (BYTE *)&szTmp, &size) ==
ERROR_SUCCESS )
	{
		if ( !stricmp(szTmp, szTxnMonNames[TUXEDO]) )
			pReg->eTxnMon = TUXEDO;
		else if ( !stricmp(szTmp, szTxnMonNames[ENCINA]) )
			pReg->eTxnMon = ENCINA;
		else if ( !stricmp(szTmp, szTxnMonNames[COM]) )
			pReg->eTxnMon = COM;
	}

	pReg->bCOM_SinglePool = FALSE;
	size = sizeof(szTmp);
	if ( RegQueryValueEx(hKey, "COM_SinglePool", 0, &type, (BYTE *)&szTmp, &size)
== ERROR_SUCCESS )
	{
		if ( !stricmp(szTmp, "YES") )
			pReg->bCOM_SinglePool = TRUE;
	}

	pReg->dwMaxConnections = 0;
	size = sizeof(dwTmp);
	if ( ( RegQueryValueEx(hKey, "MaxConnections", 0, &type, (LPBYTE)&dwTmp, &size)
== ERROR_SUCCESS )
		&& (type == REG_DWORD) )
		pReg->dwMaxConnections = dwTmp;

	pReg->dwMaxPendingDeliveries = 0;
	size = sizeof(dwTmp);
	if ( ( RegQueryValueEx(hKey, "MaxPendingDeliveries", 0, &type, (LPBYTE)&dwTmp,
&size) == ERROR_SUCCESS )
		&& (type == REG_DWORD) )
		pReg->dwMaxPendingDeliveries = dwTmp;

	pReg->dwNumberOfDeliveryThreads = 0;
	size = sizeof(dwTmp);
	if ( ( RegQueryValueEx(hKey, "NumberOfDeliveryThreads", 0, &type,
(LPBYTE)&dwTmp, &size) == ERROR_SUCCESS )
		&& (type == REG_DWORD) )
		pReg->dwNumberOfDeliveryThreads = dwTmp;

	size = sizeof( pReg->szPath );
	if ( RegQueryValueEx(hKey, "Path", 0, &type, (BYTE *)&pReg->szPath, &size) !=
ERROR_SUCCESS )
		pReg->szPath[0] = 0;

	size = sizeof( pReg->szDbServer );
	if ( RegQueryValueEx(hKey, "DbServer", 0, &type, (BYTE *)&pReg->szDbServer,
&size) != ERROR_SUCCESS )
		pReg->szDbServer[0] = 0;

	size = sizeof( pReg->szDbName );
	if ( RegQueryValueEx(hKey, "DbName", 0, &type, (BYTE *)&pReg->szDbName, &size)
!= ERROR_SUCCESS )
		pReg->szDbName[0] = 0;

	size = sizeof( pReg->szDbUser );
	if ( RegQueryValueEx(hKey, "DbUser", 0, &type, (BYTE *)&pReg->szDbUser, &size)
!= ERROR_SUCCESS )
		pReg->szDbUser[0] = 0;

	size = sizeof( pReg->szDbPassword );
	if ( RegQueryValueEx(hKey, "DbPassword", 0, &type, (BYTE *)&pReg->szDbPassword,
&size) != ERROR_SUCCESS )
		pReg->szDbPassword[0] = 0;

	RegCloseKey(hKey);

	return FALSE;
}
```

common/src/ReadRegistry.h

```
/*	FILE:		ReadRegistry.h
 *		Microsoft TPC-C Kit Ver. 4.20.000
 *		Copyright Microsoft, 1999
 *		All Rights Reserved
 *
 *		not audited
 *
 *	PURPOSE:	Header for registry related code.
 *
 *	Change history:
 *		4.20.000 - first version
 */

enum DBPROTOCOL { Unspecified, ODBC, DBLIB };
const char *szDBNames[] = { "Unspecified", "ODBC", "DBLIB" };

enum TXNMON { None, TUXEDO, ENCINA, COM };
const char *szTxnMonNames[] = { "NONE", "TUXEDO", "ENCINA", "COM" };

//This structure defines the data necessary to keep distinct for each terminal or client
connection.
typedef struct _TPCCREGISTRYDATA
{
	enum DBPROTOCOL eDB_Protocol;
	enum TXNMON eTxnMon;
	BOOL bCOM_SinglePool;
	DWORD dwMaxConnections;
	DWORD dwMaxPendingDeliveries;
```

```
          DWORD dwNumberOfDeliveryThreads;
          char szPath[128];
          char szDbServer[32];
          char szDbName[32];
          char szDbUser[32];
          char szDbPassword[32];
} TPCCREGISTRYDATA, *PTPCCREGISTRYDATA;

BOOL ReadTPCCRegistrySettings( TPCCREGISTRYDATA *pReg );
```

common/src/error.h

```
/*        FILE:               ERROR.H
 *                                    Microsoft TPC-C Kit Ver. 4.20.000
 *                                    Copyright Microsoft, 1999
 *              All Rights Reserved
 *
 *                                    Version 4.10.000 audited by Richard Gimarc,
Performance Metrics, 3/17/99
 *
 *        PURPOSE:  Header file for error exception classes.
 *
 *  Change history:
 *                  4.20.000 - updated rev number to match kit
 *                  4.21.000 - fixed bug: ~CBaseErr needed to be declared virtual
 */

#pragma once

#ifndef _INC_STRING
          #include <string.h>
#endif

const int m_szMsg_size = 512;
const int m_szApp_size = 64;
const int m_szLoc_size = 64;

//error message structure used in ErrorText routines
typedef struct _SERRORMSG
{
          int                 iError;                                 //error id of
message
          char      szMsg[256];                             //message to sent to browser
} SERRORMSG;

#define ERR_FATAL_LEVEL                         1
#define ERR_WARNING_LEVEL               2
#define ERR_INFORMATION_LEVEL 3


#define ERR_TYPE_LOGIC
          -1                  //logic error in program; internal error
#define ERR_SUCCESS
          0                   //success (a non-error error)
#define ERR_BAD_ITEM_ID
          1                   //expected abort record in txnRecord
#define ERR_TYPE_DELIVERY_POST                                          2
          //expected delivery post failed
#define   ERR_TYPE_WEBDLL
          3                   //tpcc web generated error
#define   ERR_TYPE_SQL
          4                   //sql server generated error
#define   ERR_TYPE_DBLIB
          5                   //dblib generated error
#define   ERR_TYPE_ODBC
          6                   //odbc generated error
#define ERR_TYPE_SOCKET
          7                   //error on communication socket client rte only
#define ERR_TYPE_DEADLOCK                                               8
          //dblib and odbc only deadlock condition
#define ERR_TYPE_COM
          9                   //error from COM call
#define ERR_TYPE_TUXEDO
          10                  //tuxedo error
#define ERR_TYPE_OS
          11                  //operating system error
#define ERR_TYPE_MEMORY
          12                  //memory allocation error
#define ERR_TYPE_TPCC_ODBC                                              13
          //error from tpcc odbc txn module
#define ERR_TYPE_TPCC_DBLIB                                             14
          //error from tpcc dblib txn module
#define ERR_TYPE_DELISRV                                                15
          //delivery server error
#define ERR_TYPE_TXNLOG
          16                  //txn log error
#define ERR_TYPE_BCCONN
          17                  //Benchcraft connection class
#define ERR_TYPE_TPCC_CONN                                              18
          //Benchcraft connection class
#define ERR_TYPE_ENCINA
          19                  //Encina error
#define ERR_TYPE_COMPONENT                                              20
          //error from COM component
#define ERR_TYPE_RTE
          21                  //Benchcraft rte
#define ERR_TYPE_AUTOMATION                                             22
          //Benchcraft automation errors


class CBaseErr
{
public:
          char      *m_szApp;
          char      *m_szMsg;
          char      *m_szLoc; // code location where the error occurred
          int                 m_idMsg;

          CBaseErr(void)
          {
                    m_idMsg             = 0;
                    m_szMsg             = new char[m_szMsg_size];
                    m_szApp             = new char[m_szApp_size];
                    m_szLoc             = NULL;

                    m_szMsg[0]          = 0;
                    m_szApp[0]          = 0;

                    GetModuleFileName(GetModuleHandle(NULL), m_szApp, m_szApp_size);
          }
```

```
virtual ~CBaseErr(void)
{
          if (m_szMsg)
                    delete [] m_szMsg;
          if (m_szApp)
                    delete [] m_szApp;
          if (m_szLoc)
                    delete [] m_szLoc;
};

CBaseErr(int idMsg)
{
          m_idMsg             = idMsg;
          m_szApp             = new char[m_szApp_size];
          m_szMsg             = new char[m_szMsg_size];
          m_szLoc             = NULL;

          GetModuleFileName(GetModuleHandle(NULL), m_szApp, m_szApp_size);
          LoadString(GetModuleHandle(NULL), idMsg, m_szMsg, m_szMsg_size);
}

CBaseErr(LPCTSTR szMsg)
{
          m_idMsg             = 0;
          m_szApp             = new char[m_szApp_size];
          m_szMsg             = new char[m_szMsg_size];
          m_szLoc             = NULL;

          GetModuleFileName(GetModuleHandle(NULL), m_szApp, m_szApp_size);
          strcpy(m_szMsg, szMsg);
}

void SetError(char *szMsg, LPCTSTR szLocation)
{
          if (szMsg != NULL)
                    strcpy(m_szMsg, szMsg);
          else
                    m_szMsg[0] = 0;

          if (szLocation != NULL)
          {
                    delete [] m_szLoc;
                    m_szLoc = new char[strlen(szLocation)+1];
                    strcpy(m_szLoc, szLocation);
          }
          else
          {
                    delete [] m_szLoc;
                    m_szLoc = NULL;
          }
}

virtual void Draw(HWND hwnd, LPCTSTR szStr = NULL)
{
          int                 j;
          char      szTmp[512];

          if (szStr)
                    j = wsprintf(szTmp, "%s\n",szStr);
          if (m_szLoc)
                    j += wsprintf(szTmp+j, "Location=%s\n",m_szLoc);
          if (m_szMsg)
                    j += wsprintf(szTmp+j, "%s\n", m_szMsg);
                    ::MessageBox(hwnd, szTmp, m_szApp, MB_OK);
          }

          char *GetApp(void) { return m_szApp; }
          char *GetMsg(void) { return m_szMsg; }
          char *GetLocation(void) { return m_szLoc; }

          virtual int ErrorType() = 0;  // a value which distinguishes the kind of error
that occurred
          virtual int ErrorNum() = 0;             // an error value specific to the error
type
          virtual char *ErrorText() = 0;          // a string (i.e., human readable)
representation of the error

};

class CSocketErr : public CBaseErr
{
public:
          enum Action
          {
                    eNone,
                    eSend,
                    eSocket,
                    eConnect
          };

          CSocketErr(Action eAction, LPCTSTR szLocation);
          CSocketErr(int iError) { m_errId = iError; };
          int                 m_errId;
          Action    m_eAction;

          int ErrorType() { return ERR_TYPE_SOCKET;};
          int ErrorNum() { return m_errId;};
          char *ErrorText(void);
};

class CSystemErr : public CBaseErr
{
public:
          enum Action
          {
                    eNone,
                    eTransactNamedPipe,
                    eWaitNamedPipe,
                    eSetNamedPipeHandleState,
                    eCreateFile,
                    eCreateProcess,
                    eCallNamedPipe,
                    eCreateEvent,
                    eCreateThread,
                    eVirtualAlloc,
                    eReadFile,
                    eWriteFile,
                    eMapViewOfFile,
                    eCreateFileMapping,
                    eInitializeSecurityDescriptor,
                    eSetSecurityDescriptorDacl,
                    eCreateNamedPipe,
                    eConnectNamedPipe,
                    eWaitForSingleObject,
                    eRegOpenKeyEx,
```

```
                    eRegQueryValueEx,
          };

          CSystemErr(Action eAction, LPCTSTR szLocation);

          void Draw(HWND hwnd, LPCTSTR szStr = NULL);

          int                 m_errId;
          Action    m_eAction;

          int ErrorType() { return ERR_TYPE_OS;}
          int ErrorNum() { return m_errId;}
          char *ErrorText() { return m_szMsg; }
};

class CMemoryErr : public CBaseErr
{
public:
          CMemoryErr(void);

          int ErrorType() { return ERR_TYPE_MEMORY;}
          int ErrorNum() { return 0;}
          char *ErrorText() { return "Insufficient Memory to continue.";}
};
```

common/src/trans.h

```
/*        FILE:               TRANS.H
 *                                    Microsoft TPC-C Kit Ver. 4.20.000
 *                                    Copyright Microsoft, 1999
 *              All Rights Reserved
 *
 *                                    Version 4.10.000 audited by Richard Gimarc,
Performance Metrics, 3/17/99
 *
 *        PURPOSE:  Header file for TPC-C structure templates.
 *
 *  Change history:
 *                  4.20.000 - updated rev number to match kit
 */
#pragma once

// String length constants
#define SERVER_NAME_LEN            20
#define DATABASE_NAME_LEN          20
#define USER_NAME_LEN              20
#define PASSWORD_LEN               20
#define TABLE_NAME_LEN             20
#define I_DATA_LEN                 50
#define I_NAME_LEN                 24
#define BRAND_LEN                   1
#define LAST_NAME_LEN              16
#define W_NAME_LEN                 10
#define ADDRESS_LEN                20
#define STATE_LEN                   2
#define ZIP_LEN                     9
#define S_DIST_LEN                 24
#define S_DATA_LEN                 50
#define D_NAME_LEN                 10
#define FIRST_NAME_LEN             16
#define MIDDLE_NAME_LEN             2
#define PHONE_LEN                  16
#define DATETIME_LEN               30
#define CREDIT_LEN                  2
#define C_DATA_LEN                250
#define H_DATA_LEN                 24
#define DIST_INFO_LEN              24
#define MAX_OL_NEW_ORDER_ITEMS     15
#define MAX_OL_ORDER_STATUS_ITEMS  15
#define STATUS_LEN                 25
#define OL_DIST_INFO_LEN                   24

// TIMESTAMP_STRUCT is provided by the ODBC header file sqltypes.h, but is not available
// when compiling with dblib, so redefined here.  Note: we are using the symbol
"__SQLTYPES"
// (declared in sqltypes.h) as a way to determine if TIMESTAMP_STRUCT has been declared.
#ifndef __SQLTYPES
          typedef struct
          {
                              short                         /* SQLSMALLINT */   year;
                              unsigned short      /* SQLUSMALLINT */  month;
                              unsigned short      /* SQLUSMALLINT */  day;
                              unsigned short      /* SQLUSMALLINT */  hour;
                              unsigned short      /* SQLUSMALLINT */  minute;
                              unsigned short      /* SQLUSMALLINT */  second;
                              unsigned long       /* SQLUINTEGER */   fraction;
          } TIMESTAMP_STRUCT;
#endif

// possible values for exec_status_code after transaction completes
enum EXEC_STATUS
{
          eOK,                          // 0      "Transaction commited."
          eInvalidItem,       // 1      "Item number is not valid."
          eDeliveryFailed     // 2      "Delivery Post Failed."
};

// transaction structures
typedef struct
{
          // input params
          short                                   ol_supply_w_id;
          long                                    ol_i_id;
          short                                   ol_quantity;

          // output params
          char                                    ol_i_name[I_NAME_LEN+1];
          char                                    ol_brand_generic[BRAND_LEN+1];
          double                                  ol_i_price;
          double                                  ol_amount;
          short                                   ol_stock;
} OL_NEW_ORDER_DATA;

typedef struct
{
          // input params
          short               w_id;
          short               d_id;
          long                c_id;
          short               o_ol_cnt;
```

```
        // output params
        EXEC_STATUS                     exec_status_code;
        char            c_last[LAST_NAME_LEN+1];
        char            c_credit[CREDIT_LEN+1];
        double          c_discount;
        double          w_tax;
        double          d_tax;
        long                    o_id;
        short                           o_commit_flag;
        TIMESTAMP_STRUCT    o_entry_d;
        short           o_all_local;
        double          total_amount;
        OL_NEW_ORDER_DATA   OL[MAX_OL_NEW_ORDER_ITEMS];
} NEW_ORDER_DATA, *PNEW_ORDER_DATA;

typedef struct
{       // input params
        short                           w_id;
        short                           d_id;
        long                            c_id;
        short                           c_d_id;
        short                           c_w_id;
        double                          h_amount;
        char                    c_last[LAST_NAME_LEN+1];

        // output params
        EXEC_STATUS                     exec_status_code;
        TIMESTAMP_STRUCT     h_date;
        char                            w_street_1[ADDRESS_LEN+1];
        char                            w_street_2[ADDRESS_LEN+1];
        char                            w_city[ADDRESS_LEN+1];
        char                            w_state[STATE_LEN+1];
        char                            w_zip[ZIP_LEN+1];
        char                            d_street_1[ADDRESS_LEN+1];
        char                            d_street_2[ADDRESS_LEN+1];
        char                            d_city[ADDRESS_LEN+1];
        char                            d_state[STATE_LEN+1];
        char                        d_zip[ZIP_LEN+1];
        char                            c_first[FIRST_NAME_LEN+1];
        char                            c_middle[MIDDLE_NAME_LEN + 1];
        char                            c_street_1[ADDRESS_LEN+1];
        char                            c_street_2[ADDRESS_LEN+1];
        char                            c_city[ADDRESS_LEN+1];
        char                            c_state[STATE_LEN+1];
        char                            c_zip[ZIP_LEN+1];
        char                            c_phone[PHONE_LEN+1];
        TIMESTAMP_STRUCT     c_since;
        char                            c_credit[CREDIT_LEN+1];
        double                          c_credit_lim;
        double                          c_discount;
        double                          c_balance;
        char                            c_data[200+1];
} PAYMENT_DATA, *PPAYMENT_DATA;

typedef struct
{
        long                            ol_i_id;
        short                           ol_supply_w_id;
        short                           ol_quantity;
        double                          ol_amount;
        TIMESTAMP_STRUCT    ol_delivery_d;
} OL_ORDER_STATUS_DATA;

typedef struct
{       // input params
        short           w_id;
        short           d_id;
        long            c_id;
        char            c_last[LAST_NAME_LEN+1];

        // output params
        EXEC_STATUS                     exec_status_code;
        char            c_first[FIRST_NAME_LEN+1];
        char            c_middle[MIDDLE_NAME_LEN+1];
        double          c_balance;
        long            o_id;
        TIMESTAMP_STRUCT    o_entry_d;
        short           o_carrier_id;
        OL_ORDER_STATUS_DATA OL[MAX_OL_ORDER_STATUS_ITEMS];
        short           o_ol_cnt;
} ORDER_STATUS_DATA, *PORDER_STATUS_DATA;


typedef struct
{       // input params
        short                   w_id;
        short                   o_carrier_id;

        // output params
        EXEC_STATUS                     exec_status_code;
        SYSTEMTIME              queue_time;
        long                            o_id[10];           // id's of
delivered orders for districts 1 to 10
} DELIVERY_DATA, *PDELIVERY_DATA;

//This structure is used for posting delivery transactions and for writing them to the
delivery server.
typedef struct _DELIVERY_TRANSACTION
{
        SYSTEMTIME      queue;                  //time delivery transaction
queued
        short           w_id;                   //delivery warehouse
        short           o_carrier_id;   //carrier id
} DELIVERY_TRANSACTION;

typedef struct
{       // input params
        short                           w_id;
        short                           d_id;
        short                           threshold;

        // output params
        EXEC_STATUS                     exec_status_code;
        long                            low_stock;
} STOCK_LEVEL_DATA, *PSTOCK_LEVEL_DATA;
```

common/src/txn_base.h

```
/*      FILE:           TXN_BASE.H
 *                              Microsoft TPC-C Kit Ver. 4.20.000
 *                              Copyright Microsoft, 1999
 *              All Rights Reserved
```

```
 *
 *                                       Version 4.10.000 audited by Richard Gimarc,
Performance Metrics, 3/17/99
 *
 *        PURPOSE:  Header file for TPC-C txn class implementation.
 *
 *  Change history:
 *                  4.20.000 - updated rev number to match kit
 */

#pragma once

// need to declare functions for import, unless define has already been created
// by the DLL's .cpp module for export.
#ifndef DllDecl
#define DllDecl  __declspec( dllimport )
#endif

class DllDecl CTPCC_BASE
{
          public:
                    CTPCC_BASE(void) {};
                    virtual ~CTPCC_BASE(void) {};

                    virtual PNEW_ORDER_DATA                 BuffAddr_NewOrder()
          = 0;
                    virtual PPAYMENT_DATA                   BuffAddr_Payment()
          = 0;
                    virtual PDELIVERY_DATA                  BuffAddr_Delivery()
          = 0;
                    virtual PSTOCK_LEVEL_DATA     BuffAddr_StockLevel()         = 0;
                    virtual PORDER_STATUS_DATA    BuffAddr_OrderStatus()        = 0;

                    virtual void NewOrder                   () = 0;
                    virtual void Payment                    () = 0;
                    virtual void Delivery                   () = 0;
                    virtual void StockLevel                 () = 0;
                    virtual void OrderStatus      () = 0;
};
```

db_dblib_dll/src/tpcc_dblib.cpp

```
/*        FILE:               TPCC_DBLIB.CPP
 *                                       Microsoft TPC-C Kit Ver. 4.20.000
 *                                       Copyright Microsoft, 1999
 *              All Rights Reserved
 *
 *                                       Version 4.10.000 audited by Richard Gimarc,
Performance Metrics, 3/17/99
 *
 *        PURPOSE:  Implements dblib calls for TPC-C txns.
 *        Contact:  Charles Levine (clevine@microsoft.com)
 *
 *  Change history:
 *                  4.20.000 - updated rev number to match kit
 *                  4.10.001 - not deleting error class in catch handler on deadlock
retry;
 *                                          not a functional bug, but a memory leak
 *                                       - had to tweak some declarations to compile with
latest SDK; no functional change
 */

#include <windows.h>
#include <stdio.h>
#include <assert.h>

#define DBNTWIN32
#include <sqlfront.h>
#include <sqldb.h>

#ifdef ICECAP
#include <icapexp.h>
#endif

// need to declare functions for export
#define DllDecl  __declspec( dllexport )

#include "..\..\common\src\error.h"
#include "..\..\common\src\trans.h"
#include "..\..\common\src\txn_base.h"
#include "tpcc_dblib.h"

#define   DEFCLPACKSIZE                           4096

// version string; must match return value from tpcc_version stored proc
const char          sVersion[] = "4.10.000";

const                         iMaxRetries = 10;             // how many retries on
deadlock
static    long      iConnectionCount = 0;  // number of current dblib connections

BOOL APIENTRY DllMain(HMODULE hModule, DWORD ul_reason_for_call, LPVOID lpReserved)
{
          switch( ul_reason_for_call )
          {
                    case DLL_PROCESS_ATTACH:
                              DisableThreadLibraryCalls(hModule);
                              dbinit();           // initialize dblib
                              break;

                    case DLL_PROCESS_DETACH:
                              dbexit();           // close all dblib
structures/connections
                              break;

                    default:
                              /* nothing */;
          }
          return TRUE;
}


int err_handler(DBPROCESS *dbproc, int severity, int dberr, int oserr, LPCSTR dberrstr,
LPCSTR oserrstr)
{
          CTPCC_DBLIB                             *pConn;

          assert(dbproc != NULL);
          pConn = (CTPCC_DBLIB*)dbgetuserdata(dbproc);

          if (pConn != NULL)
```

```
          {
                    pConn->SetDbLibError( severity, dberr, oserr, dberrstr, oserrstr );
          }
          return INT_CANCEL;
}

/* FUNCTION: int msg_handler(DBPROCESS *dbproc, DBINT msgno, int msgstate, int severity,
char *msgtext)
 *
 * PURPOSE:         This function handles DB-Library SQL Server error messages
 *
 * ARGUMENTS:       DBPROCESS           *dbproc                       DBPROCESS id
pointer
 *                                      DBINT                         msgno
          message number
 *                                      int                                     msgstate
          message state
 *                                      int                                     severity
          message severity
 *                                      char                          *msgtext
          printable message description
 *
 * RETURNS:                   int                                     INT_CONTINUE
          continue if error is SQLETIME else INT_CANCEL action
 *
          INT_CANCEL                  cancel operation
 *
 * COMMENTS:        This function also sets the dead lock dbproc variable if necessary.
 *
 */

// typedef INT (SQLAPI *DBMSGHANDLE_PROC)(PDBPROCESS, DBINT, INT, INT, LPCSTR, LPCSTR,
LPCSTR, DBUSMALLINT);

int msg_handler(DBPROCESS *dbproc, DBINT msgno, int msgstate, int severity,
                                      LPCSTR msgtext, LPCSTR srvname, LPCSTR procname,
DBUSMALLINT line)
{
          CTPCC_DBLIB                           *pConn;

          assert(dbproc != NULL);
          pConn = (CTPCC_DBLIB*)dbgetuserdata(dbproc);

          if (pConn != NULL)
          {
                    pConn->SetSqlError( msgno, msgstate, severity, msgtext );
          }

          return 0;
}

/* FUNCTION: void UtilStrCpy(char * pDest, char * pSrc, int n)
 *
 * PURPOSE:         This function copies n characters from string pSrc to pDst and places
a
 *                           null character at the end of the destination string.
 *
 * ARGUMENTS:       char                          *pDest    destination string pointer
 *                                      char                          *pSrc     source
string pointer
 *                                      int                                     n
          number of characters to copy
 *
 * RETURNS:                   None
 *
 * COMMENTS:        Unlike strncpy this function ensures that the result string is
 *                                     always null terminated.
 *
 */

inline static void UtilStrCpy(char * pDest, const BYTE * pSrc, int n)
{
    strncpy(pDest, (char *)pSrc, n);
    pDest[n] = '\0';

          return;
}

/* FUNCTION: CTPCC_DBLIB_ERR::ErrorText
 *
 */

char* CTPCC_DBLIB_ERR::ErrorText(void)
{
          int i;

          static SERRORMSG errorMsgs[] =
          {
                    { ERR_WRONG_SP_VERSION,                  "Wrong version of stored
procs on database server"     },
                    { ERR_INVALID_CUST,                      "Invalid Customer id,name."
                                                             },
                    { ERR_NO_SUCH_ORDER,                     "No orders found for
customer."
                                                                       },
                    { 0,                                                        ""

                              }
          };

          static char szNotFound[] = "Unknown error number.";

          for(i=0; errorMsgs[i].szMsg[0]; i++)
          {
                    if ( m_errno == errorMsgs[i].iError )
                              break;
          }
          if ( !errorMsgs[i].szMsg[0] )
                    return szNotFound;
          else
                    return errorMsgs[i].szMsg;
}

// wrapper routine for class constructor
__declspec(dllexport) CTPCC_DBLIB* CTPCC_DBLIB_new(
          LPCSTR szServer,              // name of SQL server
          LPCSTR szUser,                        // user name for login
          LPCSTR szPassword,            // password for login
          LPCSTR szHost,                        // workstation name; shows up in
sp_who; max 30 chars, only first 10 kept by SQL Server
          LPCSTR szDatabase )           // name of database to use
{
          return new CTPCC_DBLIB( szServer, szUser, szPassword, szHost, szDatabase );
}


CTPCC_DBLIB::CTPCC_DBLIB (
```

```
        LPCSTR szServer,              // name of SQL server
        LPCSTR szUser,                          // user name for login
        LPCSTR szPassword,            // password for login
        LPCSTR szHost,                          // workstation name; shows up in
sp_who; max 30 chars, only first 10 kept by SQL Server
        LPCSTR szDatabase )           // name of database to use
{
        LOGINREC  *login;
        const BYTE          *pData;

        // initialization
        m_dbproc = NULL;
        m_DbLibErr = (CDBLIBERR*)NULL;
        m_SqlErr = (CSQLERR*)NULL;

        m_MaxRetries = 10;            // how many retries on deadlock

        // increase max number of connections if getting close
        if ( dbgetmaxprocs() < (iConnectionCount+5) )
        {
                if ( dbsetmaxprocs(iConnectionCount+10) == FAIL )
                        ThrowError(CDBLIBERR::eDbSetMaxProcs);
        }

        // allocate a login structure
        login = dblogin();
        if (login == NULL)
                ThrowError(CDBLIBERR::eLogin);
        InterlockedIncrement( &iConnectionCount );

        // register error and message handler functions
        if (dbprocerrhandle(login, err_handler) == NULL)
                ThrowError(CDBLIBERR::eDbProcHandler);

        if (dbprocmsghandle(login, msg_handler) == NULL)
                ThrowError(CDBLIBERR::eDbProcHandler);


        DBSETLUSER(login, szUser);
        DBSETLPWD(login, szPassword);
        DBSETLHOST(login, szHost);
        DBSETLPACKET(login, (unsigned short)DEFCLPACKSIZE);
        DBSETLVERSION(login, DBVER60);                    // use dblib ver 6.0 client
behavior

        // set time to wait for login
        if (dbsetlogintime(60) == FAIL)
                ThrowError(CDBLIBERR::eDbSet);

        // set time to wait for statement execution
        if (dbsettime(180) == FAIL)
                ThrowError(CDBLIBERR::eDbSet);

        m_dbproc = dbopen(login, szServer);

        // deallocate login structure before checking for success
        dbfreelogin( login );

        if (m_dbproc == NULL)
                ThrowError(CDBLIBERR::eDbOpen);

        // save address of class instance so that the message and error handler
        // can get to data.
        dbsetuserdata(m_dbproc, (LPVOID)this);

        // Use the the right database
        if (dbuse(m_dbproc, szDatabase) == FAIL)
                ThrowError(CDBLIBERR::eDbUse);

        dbcmd(m_dbproc, "set nocount on ");                        // do not return
row counts
        dbcmd(m_dbproc, "set XACT_ABORT ON");             // rollback transaction on
abort

        if (dbsqlexec(m_dbproc) == FAIL)
                ThrowError(CDBLIBERR::eDbSqlExec);

        DiscardNextResults(2);

        // verify that version of stored procs on server is correct
        dbrpcinit(m_dbproc, "tpcc_version", 0);

        if (dbrpcexec(m_dbproc) == FAIL)
                ThrowError(CDBLIBERR::eDbRpcExec);

        if (dbresults(m_dbproc) != SUCCEED)
                ThrowError(CDBLIBERR::eDbResults);

        if (dbnextrow(m_dbproc) != REG_ROW)
                ThrowError(CDBLIBERR::eDbNextRow);

        char szSrvVersion[16];
        pData=dbdata(m_dbproc, 1);
        if (pData)
                UtilStrCpy(szSrvVersion, pData, dbdatlen(m_dbproc, 1));
        else
                szSrvVersion[0]=0;
        if (strcmp(szSrvVersion,sVersion))
                throw new CTPCC_DBLIB_ERR( CTPCC_DBLIB_ERR::ERR_WRONG_SP_VERSION );


        DiscardNextRows(0);
        DiscardNextResults(0);
}


CTPCC_DBLIB::~CTPCC_DBLIB( void )
{
        // close db connection and deallocate resources
        dbclose(m_dbproc);
        InterlockedDecrement( &iConnectionCount );
        if (m_DbLibErr != NULL)
                delete m_DbLibErr;
        if (m_SqlErr != NULL)
                delete m_SqlErr;
}

void CTPCC_DBLIB::SetDbLibError(int severity, int dberr, int oserr, LPCSTR dberrstr,
LPCSTR oserrstr)
{
        delete m_DbLibErr;
        m_DbLibErr = new CDBLIBERR(CDBLIBERR::eUnknown, severity, dberr, oserr);

        if (dberrstr != NULL)
        {
                m_DbLibErr->m_dberrstr = new char[ strlen(dberrstr)+1 ];
```

```
                    strcpy( m_DbLibErr->m_dberrstr, dberrstr );
          }

          if (oserrstr != NULL)
          {
                    m_DbLibErr->m_oserrstr = new char[ strlen(oserrstr)+1 ];
                    strcpy( m_DbLibErr->m_oserrstr, oserrstr );
          }

}

void CTPCC_DBLIB::SetSqlError( int /*DBINT*/ msgno, int msgstate, int severity, LPCSTR
msgtext )
{
          if (m_SqlErr == NULL)
                    m_SqlErr = new CSQLERR();

          m_SqlErr->m_msgno = msgno;
          m_SqlErr->m_msgstate = msgstate;
          m_SqlErr->m_severity = severity;

          delete [] m_SqlErr->m_msgtext;
          if (msgtext != NULL)
          {
                    m_SqlErr->m_msgtext = new char[ strlen(msgtext)+1 ];
                    strcpy( m_SqlErr->m_msgtext, msgtext );
          }
}

void CTPCC_DBLIB::ThrowError( CDBLIBERR::ACTION eAction )
{
          // discard anything still in return buffer
          DiscardNextRows(-1);
          DiscardNextResults(-1);

          // check for SQL Server error first;  if yes, throw it and ignore any DBLib
error.
          if (m_SqlErr != NULL)
          {
                    CSQLERR             *pSqlErr;
                    pSqlErr = m_SqlErr;
                    m_SqlErr = NULL;    // clear our pointer to instance; catch handler
will delete
                    throw pSqlErr;
          }

          CDBLIBERR *pDbLibErr;
          if (m_DbLibErr == NULL)
                    // this case isn't expected to happen, since it means that an error
was returned
                    // but the error handlers were not called.
                    pDbLibErr = new CDBLIBERR(eAction);
          else
          {
                    pDbLibErr = m_DbLibErr;
                    pDbLibErr->m_eAction = eAction;
                    m_DbLibErr = NULL;            // clear our pointer to instance; catch
handler will delete
          }

          throw pDbLibErr;
}
```

```
// Read and discard rows until no more.  Throw an exception if number of rows read
doesn't
// match number of rows expected.  The row count will be ignored if the expected count
value
// passed in is negative.  A typical use of this routine is to verify that there are no
more
// rows to be read.
void CTPCC_DBLIB::DiscardNextRows(int iExpectedCount)
{
          int                 iRowsRead = 0;
          RETCODE   rc;

          while (TRUE)
          {
                    rc = dbnextrow(m_dbproc);
                    if (rc == NO_MORE_ROWS)
                              break;
                    if (rc == FAIL)
                    {
                              if (iExpectedCount >= 0)
                                        ThrowError(CDBLIBERR::eDbNextRow);
                              else
                                        break;
                    }
                    iRowsRead++;
          }

          if ((iExpectedCount >= 0) &&
                    (iExpectedCount != iRowsRead))
                    ThrowError(CDBLIBERR::eWrongRowCount);
}

// Read and discard results until no more.  Throw an exception if number of result sets
read doesn't
// match number expected.  The result set count will be ignored if the expected count
value
// passed in is negative.  A typical use of this routine is to verify that there are no
more
// result sets to be read.
void CTPCC_DBLIB::DiscardNextResults(int iExpectedCount)
{
          int                 iResultsRead = 0;
          RETCODE   rc;

          while (TRUE)
          {
                    rc = dbresults(m_dbproc);
                    if (rc == NO_MORE_RESULTS)
                              break;
                    if (rc == FAIL)
                    {
                              if (iExpectedCount >= 0)
                                        ThrowError(CDBLIBERR::eDbResults);
                              else
                                        break;
                    }

                    DiscardNextRows(-1);
                    iResultsRead++;
          }

          if ((iExpectedCount >= 0) &&
                    (iExpectedCount != iResultsRead))
```

```
                    ThrowError(CDBLIBERR::eWrongRowCount);
}

void CTPCC_DBLIB::StockLevel()
{
          int                         iTryCount = 0;
          const BYTE          *pData;

          ResetError();

          while (TRUE)
          {
                    try
                    {
                              dbrpcinit(m_dbproc, "tpcc_stocklevel", 0);

                              dbrpcparam(m_dbproc, NULL, 0, SQLINT2, -1, -1, (BYTE *)
&m_txn.StockLevel.w_id);                  // @w_id smallint
                              dbrpcparam(m_dbproc, NULL, 0, SQLINT1, -1, -1, (BYTE *)
&m_txn.StockLevel.d_id);                  // @d_id tinyint
                              dbrpcparam(m_dbproc, NULL, 0, SQLINT2, -1, -1, (BYTE *)
&m_txn.StockLevel.threshold);   // @threshhold smallint

                              if (dbrpcexec(m_dbproc) == FAIL)
                                        ThrowError(CDBLIBERR::eDbRpcExec);

                              if (dbresults(m_dbproc) != SUCCEED)
                                        ThrowError(CDBLIBERR::eDbResults);

                              if (dbnextrow(m_dbproc) != REG_ROW)
                                        ThrowError(CDBLIBERR::eDbNextRow);

                              if (pData=dbdata(m_dbproc, 1))
                                        m_txn.StockLevel.low_stock = *((long *) pData);

                              DiscardNextRows(0);
                              DiscardNextResults(0);

                              m_txn.StockLevel.exec_status_code = eOK;
                              return;
                    }
                    catch (CSQLERR *e)
                    {
                              if ((e->m_msgno != 1205) || (++iTryCount > iMaxRetries))
                                        throw;

                              // hit deadlock; backoff for increasingly longer period
                              delete e;
                              Sleep(10 * iTryCount);
                    }
          }         // while (TRUE)
}


void CTPCC_DBLIB::NewOrder()
{
          int                         i;
          DBINT               commit_flag;
          DBDATETIME          datetime;
          DBDATEREC daterec;

          int                         iTryCount = 0;
          const BYTE          *pData;

          ResetError();

          while (TRUE)
          {
                    try
                    {
                              dbrpcinit(m_dbproc, "tpcc_neworder", 0);

                              dbrpcparam(m_dbproc, NULL, 0, SQLINT2, -1, -1, (BYTE *)
&m_txn.NewOrder.w_id);
                              dbrpcparam(m_dbproc, NULL, 0, SQLINT1, -1, -1, (BYTE *)
&m_txn.NewOrder.d_id);
                              dbrpcparam(m_dbproc, NULL, 0, SQLINT4, -1, -1, (BYTE *)
&m_txn.NewOrder.c_id);
                              dbrpcparam(m_dbproc, NULL, 0, SQLINT1, -1, -1, (BYTE *)
&m_txn.NewOrder.o_ol_cnt);

                              // check whether any order lines are for a remote warehouse
                              m_txn.NewOrder.o_all_local = 1;
                              for (i = 0; i < m_txn.NewOrder.o_ol_cnt; i++)
                              {
                                        if (m_txn.NewOrder.OL[i].ol_supply_w_id !=
m_txn.NewOrder.w_id)
                                        {
                                                  m_txn.NewOrder.o_all_local = 0;  // at
least one remote warehouse
                                                  break;
                                        }
                              }
                              dbrpcparam(m_dbproc, NULL, 0, SQLINT1, -1, -1, (BYTE *)
&m_txn.NewOrder.o_all_local);

                              for (i = 0; i < m_txn.NewOrder.o_ol_cnt; i++)
                              {
                                        dbrpcparam(m_dbproc, NULL, 0, SQLINT4, -1, -1,
(BYTE *) &m_txn.NewOrder.OL[i].ol_i_id);
                                        dbrpcparam(m_dbproc, NULL, 0, SQLINT2, -1, -1,
(BYTE *) &m_txn.NewOrder.OL[i].ol_supply_w_id);
                                        dbrpcparam(m_dbproc, NULL, 0, SQLINT2, -1, -1,
(BYTE *) &m_txn.NewOrder.OL[i].ol_quantity);
                              }

                              if (dbrpcexec(m_dbproc) == FAIL)
                                        ThrowError(CDBLIBERR::eDbRpcExec);


                              // Get order line results
                              m_txn.NewOrder.total_amount = 0;
                              for (i = 0; i<m_txn.NewOrder.o_ol_cnt; i++)
                              {
                                        if (dbresults(m_dbproc) != SUCCEED)
                                                  ThrowError(CDBLIBERR::eDbResults);

                                        if (dbnumcols(m_dbproc) != 5)
                                                  ThrowError(CDBLIBERR::eWrongNumCols);

                                        if (dbnextrow(m_dbproc) != REG_ROW)
                                                  ThrowError(CDBLIBERR::eDbNextRow);

                                        if(pData=dbdata(m_dbproc, 1))

          UtilStrCpy(m_txn.NewOrder.OL[i].ol_i_name, pData, dbdatlen(m_dbproc, 1));
```

```
                                        if(pData=dbdata(m_dbproc, 2))
                                                m_txn.NewOrder.OL[i].ol_stock =
(*(DBSMALLINT *) pData);
                                        if(pData=dbdata(m_dbproc, 3))

                UtilStrCpy(m_txn.NewOrder.OL[i].ol_brand_generic, pData, dbdatlen(m_dbproc,
3));
                                        if(pData=dbdata(m_dbproc, 4))
                                                dbconvert(m_dbproc, SQLNUMERIC, pData,
dbdatlen(m_dbproc,4),
                                                SQLFLT8, (BYTE
*)&m_txn.NewOrder.OL[i].ol_i_price, 8);
                                        if(pData=dbdata(m_dbproc, 5))

                                                dbconvert(m_dbproc, SQLNUMERIC, pData,
dbdatlen(m_dbproc,5),
                                                SQLFLT8, (BYTE
*)&m_txn.NewOrder.OL[i].ol_amount, 8);

                                        m_txn.NewOrder.total_amount =
m_txn.NewOrder.total_amount + m_txn.NewOrder.OL[i].ol_amount;

                                        DiscardNextRows(0);
                                }


                                // get remaining values for w_tax, d_tax, o_id, c_last,
c_discount, c_credit, o_entry_d, commit_flag
                                if (dbresults(m_dbproc) != SUCCEED)
                                        ThrowError(CDBLIBERR::eDbResults);

                                if (dbnextrow(m_dbproc) != REG_ROW)
                                        ThrowError(CDBLIBERR::eDbNextRow);

                                if (dbnumcols(m_dbproc) != 8)
                                        ThrowError(CDBLIBERR::eWrongNumCols);

                                if (pData=dbdata(m_dbproc, 1))



                                        dbconvert(m_dbproc, SQLNUMERIC, pData,
dbdatlen(m_dbproc,1), SQLFLT8, (BYTE *)&m_txn.NewOrder.w_tax, 8);
                                if (pData=dbdata(m_dbproc, 2))

                                        dbconvert(m_dbproc, SQLNUMERIC, pData,
dbdatlen(m_dbproc,2), SQLFLT8, (BYTE *)&m_txn.NewOrder.d_tax, 8);
                                if (pData=dbdata(m_dbproc, 3))
                                        m_txn.NewOrder.o_id = (*(DBINT *) pData);
                                if (pData=dbdata(m_dbproc, 4))
                                        UtilStrCpy(m_txn.NewOrder.c_last, pData,
dbdatlen(m_dbproc, 4));
                                if (pData=dbdata(m_dbproc, 5))
                                        dbconvert(m_dbproc, SQLNUMERIC, pData,
dbdatlen(m_dbproc,5), SQLFLT8, (BYTE *)&m_txn.NewOrder.c_discount, 8);
                                if (pData=dbdata(m_dbproc, 6))
                                        UtilStrCpy(m_txn.NewOrder.c_credit, pData,
dbdatlen(m_dbproc, 6));
                                if (pData=dbdata(m_dbproc, 7))
                                {
                                        datetime = *((DBDATETIME *) pData);
                                        dbdatecrack(m_dbproc, &daterec, &datetime);
                                        m_txn.NewOrder.o_entry_d.year   = daterec.year;
                                        m_txn.NewOrder.o_entry_d.month  = daterec.month;
                                        m_txn.NewOrder.o_entry_d.day    = daterec.day;
                                        m_txn.NewOrder.o_entry_d.hour   = daterec.hour;
                                        m_txn.NewOrder.o_entry_d.minute = daterec.minute;
                                        m_txn.NewOrder.o_entry_d.second = daterec.second;
                                }
                                if (pData=dbdata(m_dbproc, 8))
                                        commit_flag = (*(DBTINYINT *) pData);

                                DiscardNextRows(0);
                                DiscardNextResults(0);


                                if (commit_flag == 1)
                                {
                                        m_txn.NewOrder.total_amount *= ((1 +
m_txn.NewOrder.w_tax + m_txn.NewOrder.d_tax) * (1 - m_txn.NewOrder.c_discount));
                                        m_txn.NewOrder.exec_status_code = eOK;
                                }
                                else
                                        m_txn.NewOrder.exec_status_code = eInvalidItem;

                                return;
                        }
                        catch (CSQLERR *e)
                        {
                                if ((e->m_msgno != 1205) || (++iTryCount > iMaxRetries))
                                        throw;

                                // hit deadlock; backoff for increasingly longer period
                                delete e;
                                Sleep(10 * iTryCount);
                        }
                }       // while (TRUE)
}


void CTPCC_DBLIB::Payment()
{
        DBDATETIME          datetime;
        DBDATEREC daterec;

        int                         iTryCount = 0;
        const BYTE          *pData;

        ResetError();

        while (TRUE)
        {
                try
                {
                        dbrpcinit(m_dbproc, "tpcc_payment", 0);

                        dbrpcparam(m_dbproc, NULL, 0, SQLINT2, -1, -1, (BYTE *)
&m_txn.Payment.w_id);
                        dbrpcparam(m_dbproc, NULL, 0, SQLINT2, -1, -1, (BYTE *)
&m_txn.Payment.c_w_id);
                        dbrpcparam(m_dbproc, NULL, 0, SQLFLT8, -1, -1, (BYTE *)
&m_txn.Payment.h_amount);
                        dbrpcparam(m_dbproc, NULL, 0, SQLINT1, -1, -1, (BYTE *)
&m_txn.Payment.d_id);
                        dbrpcparam(m_dbproc, NULL, 0, SQLINT1, -1, -1, (BYTE *)
&m_txn.Payment.c_d_id);
```

```
                                dbrpcparam(m_dbproc, NULL, 0, SQLINT4, -1, -1, (BYTE *)
&m_txn.Payment.c_id);

                                // if customer id is zero, then payment is by name
                                if (m_txn.Payment.c_id == 0)
                                        dbrpcparam(m_dbproc, NULL, 0, SQLCHAR, -1,
strlen(m_txn.Payment.c_last), (unsigned char *)m_txn.Payment.c_last);

                                if (dbrpcexec(m_dbproc) == FAIL)
                                        ThrowError(CDBLIBERR::eDbRpcExec);

                                if (dbresults(m_dbproc) != SUCCEED)
                                        ThrowError(CDBLIBERR::eDbResults);

                                if (dbnextrow(m_dbproc) != REG_ROW)
                                        ThrowError(CDBLIBERR::eDbNextRow);

                                if (dbnumcols(m_dbproc) != 27)
                                        ThrowError(CDBLIBERR::eWrongNumCols);

                                if (pData=dbdata(m_dbproc, 1))
                                        m_txn.Payment.c_id = *((DBINT *) pData);
                                if (pData=dbdata(m_dbproc, 2))
                                        UtilStrCpy(m_txn.Payment.c_last, pData,
dbdatlen(m_dbproc, 2));
                                if (pData=dbdata(m_dbproc, 3))
                                {
                                        datetime = *((DBDATETIME *) pData);
                                        dbdatecrack(m_dbproc, &daterec, &datetime);
                                        m_txn.Payment.h_date.year   = daterec.year;
                                        m_txn.Payment.h_date.month  = daterec.month;
                                        m_txn.Payment.h_date.day    = daterec.day;
                                        m_txn.Payment.h_date.hour   = daterec.hour;
                                        m_txn.Payment.h_date.minute = daterec.minute;
                                        m_txn.Payment.h_date.second = daterec.second;
                                }
                                if (pData=dbdata(m_dbproc, 4))
                                        UtilStrCpy(m_txn.Payment.w_street_1, pData,
dbdatlen(m_dbproc, 4));
                                if (pData=dbdata(m_dbproc, 5))
                                        UtilStrCpy(m_txn.Payment.w_street_2, pData,
dbdatlen(m_dbproc, 5));
                                if (pData=dbdata(m_dbproc, 6))
                                        UtilStrCpy(m_txn.Payment.w_city, pData,
dbdatlen(m_dbproc, 6));
                                if (pData=dbdata(m_dbproc, 7))
                                        UtilStrCpy(m_txn.Payment.w_state, pData,
dbdatlen(m_dbproc, 7));
                                if (pData=dbdata(m_dbproc, 8))
                                        UtilStrCpy(m_txn.Payment.w_zip, pData,
dbdatlen(m_dbproc, 8));
                                if (pData=dbdata(m_dbproc, 9))
                                        UtilStrCpy(m_txn.Payment.d_street_1, pData,
dbdatlen(m_dbproc, 9));
                                if (pData=dbdata(m_dbproc, 10))
                                        UtilStrCpy(m_txn.Payment.d_street_2, pData,
dbdatlen(m_dbproc, 10));
                                if (pData=dbdata(m_dbproc, 11))
                                        UtilStrCpy(m_txn.Payment.d_city, pData,
dbdatlen(m_dbproc, 11));
                                if (pData=dbdata(m_dbproc, 12))
                                        UtilStrCpy(m_txn.Payment.d_state, pData,
dbdatlen(m_dbproc, 12));
                                if (pData=dbdata(m_dbproc, 13))
                                        UtilStrCpy(m_txn.Payment.d_zip, pData,
dbdatlen(m_dbproc, 13));
                                if (pData=dbdata(m_dbproc, 14))
                                        UtilStrCpy(m_txn.Payment.c_first, pData,
dbdatlen(m_dbproc, 14));
                                if (pData=dbdata(m_dbproc, 15))
                                        UtilStrCpy(m_txn.Payment.c_middle, pData,
dbdatlen(m_dbproc, 15));
                                if (pData=dbdata(m_dbproc, 16))
                                        UtilStrCpy(m_txn.Payment.c_street_1, pData,
dbdatlen(m_dbproc, 16));
                                if (pData=dbdata(m_dbproc, 17))
                                        UtilStrCpy(m_txn.Payment.c_street_2, pData,
dbdatlen(m_dbproc, 17));
                                if (pData=dbdata(m_dbproc, 18))
                                        UtilStrCpy(m_txn.Payment.c_city, pData,
dbdatlen(m_dbproc, 18));
                                if (pData=dbdata(m_dbproc, 19))
                                        UtilStrCpy(m_txn.Payment.c_state, pData,
dbdatlen(m_dbproc, 19));
                                if (pData=dbdata(m_dbproc, 20))
                                        UtilStrCpy(m_txn.Payment.c_zip, pData,
dbdatlen(m_dbproc, 20));
                                if (pData=dbdata(m_dbproc, 21))
                                        UtilStrCpy(m_txn.Payment.c_phone, pData,
dbdatlen(m_dbproc, 21));
                                if (pData=dbdata(m_dbproc, 22))
                                {
                                        datetime = *((DBDATETIME *) pData);
                                        dbdatecrack(m_dbproc, &daterec, &datetime);
                                        m_txn.Payment.c_since.year   = daterec.year;
                                        m_txn.Payment.c_since.month  = daterec.month;
                                        m_txn.Payment.c_since.day    = daterec.day;
                                        m_txn.Payment.c_since.hour   = daterec.hour;
                                        m_txn.Payment.c_since.minute = daterec.minute;
                                        m_txn.Payment.c_since.second = daterec.second;
                                }
                                if(pData=dbdata(m_dbproc, 23))
                                        UtilStrCpy(m_txn.Payment.c_credit, pData,
dbdatlen(m_dbproc, 23));
                                if(pData=dbdata(m_dbproc, 24))
                                        dbconvert(m_dbproc, SQLNUMERIC, pData,
dbdatlen(m_dbproc,24), SQLFLT8, (BYTE *)&m_txn.Payment.c_credit_lim, 8);
                                if(pData=dbdata(m_dbproc, 25))
                                        dbconvert(m_dbproc, SQLNUMERIC, pData,
dbdatlen(m_dbproc,25), SQLFLT8, (BYTE *)&m_txn.Payment.c_discount, 8);
                                if(pData=dbdata(m_dbproc, 26))
                                        dbconvert(m_dbproc, SQLNUMERIC, pData,
dbdatlen(m_dbproc,26), SQLFLT8, (BYTE *)&m_txn.Payment.c_balance, 8);
                                if(pData=dbdata(m_dbproc, 27))
                                        UtilStrCpy(m_txn.Payment.c_data, pData,
dbdatlen(m_dbproc, 27));

                                DiscardNextRows(0);
                                DiscardNextResults(0);


                                if (m_txn.Payment.c_id == 0)
                                        throw new CTPCC_DBLIB_ERR(
CTPCC_DBLIB_ERR::ERR_INVALID_CUST );
                                else
                                        m_txn.Payment.exec_status_code = eOK;
```

```
                        return;
                }
                catch (CSQLERR *e)
                {
                        if ((e->m_msgno != 1205) || (++iTryCount > iMaxRetries))
                                throw;

                        // hit deadlock; backoff for increasingly longer period
                        delete e;
                        Sleep(10 * iTryCount);
                }
        }       // while (TRUE)
}


void CTPCC_DBLIB::OrderStatus()
{
        int                     i;
        DBDATETIME      datetime;
        DBDATEREC daterec;

        int                     iTryCount = 0;
        RETCODE         rc;
        const BYTE      *pData;

        ResetError();

        while (TRUE)
        {
                try
                {
                        dbrpcinit(m_dbproc, "tpcc_orderstatus", 0);

                        dbrpcparam(m_dbproc, NULL, 0, SQLINT2, -1, -1, (BYTE *)
&m_txn.OrderStatus.w_id);
                        dbrpcparam(m_dbproc, NULL, 0, SQLINT1, -1, -1, (BYTE *)
&m_txn.OrderStatus.d_id);
                        dbrpcparam(m_dbproc, NULL, 0, SQLINT4, -1, -1, (BYTE *)
&m_txn.OrderStatus.c_id);

                        // if customer id is zero, then order status is by name
                        if (m_txn.OrderStatus.c_id == 0)
                                dbrpcparam(m_dbproc, NULL, 0, SQLCHAR, -1,
strlen(m_txn.OrderStatus.c_last), (unsigned char *)m_txn.OrderStatus.c_last);


                        if (dbrpcexec(m_dbproc) == FAIL)
                                ThrowError(CDBLIBERR::eDbRpcExec);

                        // Get order lines
                        if (dbresults(m_dbproc) != SUCCEED)
                        {
                                if ((m_DbLibErr == NULL) && (m_SqlErr == NULL))
                                        throw new CTPCC_DBLIB_ERR(
CTPCC_DBLIB_ERR::ERR_NO_SUCH_ORDER );
                                else
                                        ThrowError(CDBLIBERR::eDbResults);
                        }

                        if (dbnumcols(m_dbproc) != 5)
                                ThrowError(CDBLIBERR::eWrongNumCols);

                        i = 0;
                        while (TRUE)
                        {
                                rc = dbnextrow(m_dbproc);
                                if (rc == NO_MORE_ROWS)
                                        break;
                                if (rc != REG_ROW)
                                        ThrowError(CDBLIBERR::eDbNextRow);

                                if(pData=dbdata(m_dbproc, 1))
                                        m_txn.OrderStatus.OL[i].ol_supply_w_id
= (*(DBSMALLINT *) pData);
                                if(pData=dbdata(m_dbproc, 2))
                                        m_txn.OrderStatus.OL[i].ol_i_id =
(*(DBINT *) pData);
                                if(pData=dbdata(m_dbproc, 3))
                                        m_txn.OrderStatus.OL[i].ol_quantity =
(*(DBSMALLINT *) pData);
                                if(pData=dbdata(m_dbproc, 4))
                                        dbconvert(m_dbproc, SQLNUMERIC, pData,
dbdatlen(m_dbproc,4),
                                                                SQLFLT8, (BYTE
*)&m_txn.OrderStatus.OL[i].ol_amount, 8);
                                if(pData=dbdata(m_dbproc, 5))
                                {
                                        datetime = *((DBDATETIME *) pData);
                                        dbdatecrack(m_dbproc, &daterec,
&datetime);

        m_txn.OrderStatus.OL[i].ol_delivery_d.year   = daterec.year;

        m_txn.OrderStatus.OL[i].ol_delivery_d.month  = daterec.month;

        m_txn.OrderStatus.OL[i].ol_delivery_d.day    = daterec.day;

        m_txn.OrderStatus.OL[i].ol_delivery_d.hour   = daterec.hour;

        m_txn.OrderStatus.OL[i].ol_delivery_d.minute = daterec.minute;

        m_txn.OrderStatus.OL[i].ol_delivery_d.second = daterec.second;
                                }
                                i++;
                        }
                        m_txn.OrderStatus.o_ol_cnt = i;


                        if (dbresults(m_dbproc) != SUCCEED)
                                ThrowError(CDBLIBERR::eDbResults);

                        if (dbnextrow(m_dbproc) != REG_ROW)
                                ThrowError(CDBLIBERR::eDbNextRow);

                        if (dbnumcols(m_dbproc) != 8)
                                ThrowError(CDBLIBERR::eWrongNumCols);

                        if(pData=dbdata(m_dbproc, 1))
                                m_txn.OrderStatus.c_id = (*(DBINT *) pData);
                        if(pData=dbdata(m_dbproc, 2))
                                UtilStrCpy(m_txn.OrderStatus.c_last, pData,
dbdatlen(m_dbproc,2));
                        if(pData=dbdata(m_dbproc, 3))
```

```
                                        UtilStrCpy(m_txn.OrderStatus.c_first, pData,
dbdatlen(m_dbproc,3));
                                if(pData=dbdata(m_dbproc, 4))
                                        UtilStrCpy(m_txn.OrderStatus.c_middle, pData,
dbdatlen(m_dbproc, 4));
                                if(pData=dbdata(m_dbproc, 5))
                                {
                                        datetime = *((DBDATETIME *) pData);
                                        dbdatecrack(m_dbproc, &daterec, &datetime);
                                        m_txn.OrderStatus.o_entry_d.year   =
daterec.year;
                                        m_txn.OrderStatus.o_entry_d.month  =
daterec.month;
                                        m_txn.OrderStatus.o_entry_d.day    = daterec.day;
                                        m_txn.OrderStatus.o_entry_d.hour   =
daterec.hour;
                                        m_txn.OrderStatus.o_entry_d.minute =
daterec.minute;
                                        m_txn.OrderStatus.o_entry_d.second =
daterec.second;
                                }
                                if(pData=dbdata(m_dbproc, 6))
                                        m_txn.OrderStatus.o_carrier_id = (*(DBSMALLINT *)
pData);
                                if(pData=dbdata(m_dbproc, 7))
                                        dbconvert(m_dbproc, SQLNUMERIC, pData,
dbdatlen(m_dbproc,7),
                                                                SQLFLT8, (BYTE
*)&m_txn.OrderStatus.c_balance, 8);
                                if(pData=dbdata(m_dbproc, 8))
                                        m_txn.OrderStatus.o_id = (*(DBINT *) pData);

                                DiscardNextRows(0);
                                DiscardNextResults(0);


                                if (m_txn.OrderStatus.o_ol_cnt == 0)
                                        throw new CTPCC_DBLIB_ERR(
CTPCC_DBLIB_ERR::ERR_NO_SUCH_ORDER );
                                else if (m_txn.OrderStatus.c_id == 0 &&
m_txn.OrderStatus.c_last[0] == 0)
                                        throw new CTPCC_DBLIB_ERR(
CTPCC_DBLIB_ERR::ERR_INVALID_CUST );
                                else
                                        m_txn.OrderStatus.exec_status_code = eOK;

                                return;
                        }
                        catch (CSQLERR *e)
                        {
                                if ((e->m_msgno != 1205) || (++iTryCount > iMaxRetries))
                                        throw;

                                // hit deadlock; backoff for increasingly longer period
                                delete e;
                                Sleep(10 * iTryCount);
                        }
                }       // while (TRUE)
}


void CTPCC_DBLIB::Delivery()
{
                int                             i;
                int                             iTryCount = 0;
                const BYTE              *pData;

                ResetError();

                while (TRUE)
                {
                        try
                        {
                                dbrpcinit(m_dbproc, "tpcc_delivery", 0);

                                dbrpcparam(m_dbproc, NULL, 0, SQLINT2, -1, -1, (BYTE *)
&m_txn.Delivery.w_id);
                                dbrpcparam(m_dbproc, NULL, 0, SQLINT1, -1, -1, (BYTE *)
&m_txn.Delivery.o_carrier_id);

                                if (dbrpcexec(m_dbproc) == FAIL)
                                        ThrowError(CDBLIBERR::eDbRpcExec);

                                if (dbresults(m_dbproc) != SUCCEED)
                                        ThrowError(CDBLIBERR::eDbResults);

                                if (dbnextrow(m_dbproc) != REG_ROW)
                                        ThrowError(CDBLIBERR::eDbNextRow);

                                if (dbnumcols(m_dbproc) != 10)
                                        ThrowError(CDBLIBERR::eWrongNumCols);

                                for (i=0; i<10; i++)
                                {
                                        if (pData = dbdata(m_dbproc, i+1))
                                                m_txn.Delivery.o_id[i] = *((DBINT
*)pData);
                                }

                                DiscardNextRows(0);
                                DiscardNextResults(0);

                                m_txn.Delivery.exec_status_code = eOK;
                                return;
                        }
                        catch (CSQLERR *e)
                        {
                                if ((e->m_msgno != 1205) || (++iTryCount > iMaxRetries))
                                        throw;

                                // hit deadlock; backoff for increasingly longer period
                                delete e;
                                Sleep(10 * iTryCount);
                        }
                }       // while (TRUE)
}

void CTPCC_DBLIB::ResetError()
{
                if (m_DbLibErr != NULL)
                {
                        delete m_DbLibErr;
                        m_DbLibErr = (CDBLIBERR*)NULL;
                }

                if (m_SqlErr != NULL)
```

```
        {
                delete m_SqlErr;
                m_SqlErr = (CSQLERR*)NULL;
        }
        return;
}
```

db_dblib_dll/src/tpcc_dblib.h

```
/*      FILE:           TPCC_DBLIB.H
 *                              Microsoft TPC-C Kit Ver. 4.20.000
 *                              Copyright Microsoft, 1999
 *            All Rights Reserved
 *
 *                              Version 4.10.000 audited by Richard Gimarc,
Performance Metrics, 3/17/99
 *
 *      PURPOSE:  Header file for TPC-C txn class implementation.
 *
 *  Change history:
 *              4.20.000 - updated rev number to match kit
 */
#pragma once

#ifndef PDBPROCESS
#define DBPROCESS void   // dbprocess structure type
typedef DBPROCESS * PDBPROCESS;
#endif

// need to declare functions for import, unless define has already been created
// by the DLL's .cpp module for export.
#ifndef DllDecl
#define DllDecl  __declspec( dllimport )
#endif

class CSQLERR : public CBaseErr
{
        public:

                CSQLERR(void)
                {
                        m_msgno = 0;
                        m_msgstate = 0;
                        m_severity = 0;
                        m_msgtext = NULL;
                };

                ~CSQLERR()
                {
                        delete [] m_msgtext;
                };

                int             m_msgno;
                int             m_msgstate;
                int             m_severity;
                char   *m_msgtext;

                int ErrorType() {return ERR_TYPE_SQL;};
                int ErrorNum() {return m_msgno;};
                char *ErrorText() {return m_msgtext;};

};

class CDBLIBERR : public CBaseErr
{
        public:
                enum ACTION
                {
                        eNone,
                        eUnknown,
                        eLogin,                         // error from
dblogin
                        eDbOpen,                // error from dbopen
                        eDbUse,                         // error from dbuse
                        eDbSqlExec,                     // error from
dbsqlexec
                        eDbSet,                         // error from one
of the dbset* routines
                        eDbNextRow,                     // error from
dbnextrow
                        eWrongRowCount,         // more or less rows returned
than expected
                        eWrongNumCols,          // more or less columns
returned than expected
                        eDbResults,                     // error from
dbresults
                        eDbRpcExec,                     // error from
dbrpcexec
                        eDbSetMaxProcs,         // error from dbsetmaxprocs
                        eDbProcHandler          // error from either
dbprocerrhandle or dbprocmsghandle
                };

                CDBLIBERR(ACTION eAction, int severity = 0, int dberror = 0, int
oserr = 0)
                {
                        m_eAction = eAction;
                        m_severity = severity;
                        m_dberror = dberror;
                        m_oserr = oserr;

                        m_dberrstr = NULL;
                        m_oserrstr = NULL;
                };

                ~CDBLIBERR()
                {
                        delete [] m_dberrstr;
                        delete [] m_oserrstr;
                };

                ACTION    m_eAction;
                int             m_severity;
                int             m_dberror;
                int             m_oserr;
                char   *m_dberrstr;
                char   *m_oserrstr;

                int ErrorType() {return ERR_TYPE_DBLIB;};
                int ErrorNum() {return m_dberror;};
                char *ErrorText() {return m_dberrstr;};
```

```
};

class CTPCC_DBLIB_ERR : public CBaseErr
{
          public:
                    enum CTPCC_DBLIB_ERRS
                    {
                              ERR_WRONG_SP_VERSION = 1,     // "Wrong version of stored
procs on database server"
                              ERR_INVALID_CUST,                       // "Invalid
Customer id,name."
                              ERR_NO_SUCH_ORDER                       // "No orders found
for customer."
                    };

                    CTPCC_DBLIB_ERR( int iErr ) { m_errno = iErr; };

                    int                 m_errno;

                    int ErrorType() {return ERR_TYPE_TPCC_DBLIB;};
                    int ErrorNum() {return m_errno;};

                    char *ErrorText();
};

class DllDecl CTPCC_DBLIB : public CTPCC_BASE
{
          private:
                    // declare variables and private functions here...
                    PDBPROCESS          m_dbproc;
                    CDBLIBERR *m_DbLibErr;                  // not allocated until needed
(maybe never)
                    CSQLERR             *m_SqlErr;                              // not
allocated until needed (maybe never)
                    int                           m_MaxRetries;                 // retry
count on deadlock

                    void DiscardNextRows(int iExpectedCount);
                    void DiscardNextResults(int iExpectedCount);
                    void ThrowError( CDBLIBERR::ACTION eAction );
                    void ResetError();

                    union
                    {
                              NEW_ORDER_DATA                NewOrder;
                              PAYMENT_DATA                  Payment;
                              DELIVERY_DATA                 Delivery;
                              STOCK_LEVEL_DATA    StockLevel;
                              ORDER_STATUS_DATA   OrderStatus;
                    }                             m_txn;

          public:
                    CTPCC_DBLIB(LPCSTR szServer, LPCSTR szUser, LPCSTR szPassword, LPCSTR
szHost, LPCSTR szDatabase );
                    ~CTPCC_DBLIB(void);

                    inline PNEW_ORDER_DATA                  BuffAddr_NewOrder()
          { return &m_txn.NewOrder;    };
                    inline PPAYMENT_DATA                    BuffAddr_Payment()
          { return &m_txn.Payment;     };
                    inline PDELIVERY_DATA                   BuffAddr_Delivery()
          { return &m_txn.Delivery;    };
                    inline PSTOCK_LEVEL_DATA      BuffAddr_StockLevel()         { return
&m_txn.StockLevel;  };
                    inline PORDER_STATUS_DATA     BuffAddr_OrderStatus()        { return
&m_txn.OrderStatus; };

                    void NewOrder                 ();
                    void Payment                  ();
                    void Delivery                 ();
                    void StockLevel               ();
                    void OrderStatus    ();


                    // these are public because they must be called from the dblib
err_handler and msg_hangler
                    // outside of the class
                    void SetDbLibError(int severity, int dberr, int oserr, LPCSTR
dberrstr, LPCSTR oserrstr);
                    void SetSqlError( int msgno, int msgstate, int severity, LPCSTR
msgtext );

};

extern "C" DllDecl CTPCC_DBLIB* CTPCC_DBLIB_new
          ( LPCSTR szServer, LPCSTR szUser, LPCSTR szPassword, LPCSTR szHost, LPCSTR
szDatabase );

typedef CTPCC_DBLIB* (TYPE_CTPCC_DBLIB)(LPCSTR, LPCSTR, LPCSTR, LPCSTR, LPCSTR);
```

tm_com_dll/src/tpcc_com.cpp

```
/*        FILE:               TPCC_COM.CPP
 *                                      Microsoft TPC-C Kit Ver. 4.20.000
 *                                      Copyright Microsoft, 1999
 *              All Rights Reserved
 *
 *                                      not yet audited
 *
 *        PURPOSE:  Source file for TPC-C COM+ class implementation.
 *        Contact:  Charles Levine (clevine@microsoft.com)
 *
 *  Change history:
 *                  4.20.000 - first version
 */

// needed for CoinitializeEx
#define _WIN32_WINNT 0x0400

#include <windows.h>

// need to declare functions for export
#define DllDecl  __declspec( dllexport )

#include "..\..\common\src\trans.h"               //tpckit transaction header contains
definations of structures specific to TPC-C
#include "..\..\common\src\error.h"
#include "..\..\common\src\txn_base.h"
#include "tpcc_com.h"

#include "..\..\tpcc_com_ps\src\tpcc_com_ps_i.c"
```

```
#include "..\..\tpcc_com_all\src\tpcc_com_all_i.c"

// wrapper routine for class constructor
__declspec(dllexport) CTPCC_COM* CTPCC_COM_new(BOOL bSinglePool)
{
	return new CTPCC_COM(bSinglePool);
}

CTPCC_COM::CTPCC_COM(BOOL bSinglePool)
{
	HRESULT hr = NULL;
	long lRet = 0;
	ULONG ulTmpSize = 0;

	m_pTxn			= NULL;
	m_pNewOrder		= NULL;
	m_pPayment		= NULL;
	m_pStockLevel		= NULL;
	m_pOrderStatus		= NULL;

	m_bSinglePool		= bSinglePool;

	ulTmpSize = (ULONG) sizeof(COM_DATA);
	VariantInit(&m_vTxn);
	m_vTxn.vt = VT_SAFEARRAY;

	m_vTxn.parray = SafeArrayCreateVector(VT_UI1, ulTmpSize, ulTmpSize);
	if (!m_vTxn.parray)
		throw new CCOMERR( E_FAIL );

	memset((void*)m_vTxn.parray->pvData,0,ulTmpSize);
	m_pTxn = (COM_DATA*)m_vTxn.parray->pvData;

	hr = CoInitializeEx(NULL, COINIT_MULTITHREADED);
	if (FAILED(hr))
	{
		throw new CCOMERR( hr );
	}

	// create components
	if (m_bSinglePool)
	{
		hr = CoCreateInstance(CLSID_TPCC, NULL, CLSCTX_SERVER, IID_ITPCC,
(void **)&m_pNewOrder);
		if (FAILED(hr))
			throw new CCOMERR(hr);

		// all txns will use same component
		m_pPayment = m_pNewOrder;
		m_pStockLevel = m_pNewOrder;
		m_pOrderStatus = m_pNewOrder;
	}
	else
	{
		// use different components for each txn

		hr = CoCreateInstance(CLSID_NewOrder, NULL, CLSCTX_SERVER, IID_ITPCC,
(void **)&m_pNewOrder);
		if (FAILED(hr))
			throw new CCOMERR(hr);

		hr = CoCreateInstance(CLSID_Payment, NULL, CLSCTX_SERVER, IID_ITPCC,
(void **)&m_pPayment);
		if (FAILED(hr))
			throw new CCOMERR(hr);

		hr = CoCreateInstance(CLSID_StockLevel, NULL, CLSCTX_SERVER,
IID_ITPCC, (void **)&m_pStockLevel);
		if (FAILED(hr))
			throw new CCOMERR(hr);

		hr = CoCreateInstance(CLSID_OrderStatus, NULL, CLSCTX_SERVER,
IID_ITPCC, (void **)&m_pOrderStatus);
		if (FAILED(hr))
			throw new CCOMERR(hr);
	}

	// call setcomplete to release each component back into pool
	hr = m_pNewOrder->CallSetComplete();
	if (FAILED(hr))
		throw new CCOMERR(hr);

	if (!m_bSinglePool)
	{
		hr = m_pPayment->CallSetComplete();
		if (FAILED(hr))
			throw new CCOMERR(hr);

		hr = m_pStockLevel->CallSetComplete();
		if (FAILED(hr))
			throw new CCOMERR(hr);

		hr = m_pOrderStatus->CallSetComplete();
		if (FAILED(hr))
			throw new CCOMERR(hr);
	}
}

CTPCC_COM::~CTPCC_COM()
{
	if (m_pTxn)
		SafeArrayDestroy(m_vTxn.parray);

	ReleaseInterface(m_pNewOrder);
	if (!m_bSinglePool)
	{
		ReleaseInterface(m_pPayment);
		ReleaseInterface(m_pStockLevel);
		ReleaseInterface(m_pOrderStatus);
	}
	CoUninitialize();
}

void CTPCC_COM::NewOrder()
{
	VARIANT	vTxn_out;

	HRESULT hr = m_pNewOrder->NewOrder(m_vTxn, &vTxn_out);
	if (FAILED(hr))
		throw new CCOMERR( hr );
	memcpy(m_pTxn, (void *)vTxn_out.parray->pvData,vTxn_out.parray-
>rgsabound[0].cElements);
	SafeArrayDestroy(vTxn_out.parray);

	if ( m_pTxn->ErrorType != ERR_SUCCESS )
		throw new CCOMERR( m_pTxn->ErrorType, m_pTxn->error );
```


Copyright Dell

```
}

void CTPCC_COM::Payment()
{
          VARIANT   vTxn_out;

          HRESULT hr = m_pPayment->Payment(m_vTxn, &vTxn_out);
          if (FAILED(hr))
                    throw new CCOMERR( hr );
          memcpy(m_pTxn, (void *)vTxn_out.parray->pvData,vTxn_out.parray-
>rgsabound[0].cElements);
          SafeArrayDestroy(vTxn_out.parray);

          if ( m_pTxn->ErrorType != ERR_SUCCESS )
                    throw new CCOMERR( m_pTxn->ErrorType, m_pTxn->error );
}

void CTPCC_COM::StockLevel()
{
          VARIANT   vTxn_out;

          HRESULT hr = m_pStockLevel->StockLevel(m_vTxn, &vTxn_out);
          if (FAILED(hr))
                    throw new CCOMERR( hr );
          memcpy(m_pTxn, (void *)vTxn_out.parray->pvData,vTxn_out.parray-
>rgsabound[0].cElements);
          SafeArrayDestroy(vTxn_out.parray);

          if ( m_pTxn->ErrorType != ERR_SUCCESS )
                    throw new CCOMERR( m_pTxn->ErrorType, m_pTxn->error );
}

void CTPCC_COM::OrderStatus()
{
          VARIANT   vTxn_out;

          HRESULT hr = m_pOrderStatus->OrderStatus(m_vTxn, &vTxn_out);
          if (FAILED(hr))
                    throw new CCOMERR( hr );
          memcpy(m_pTxn, (void *)vTxn_out.parray->pvData,vTxn_out.parray-
>rgsabound[0].cElements);
          SafeArrayDestroy(vTxn_out.parray);

          if ( m_pTxn->ErrorType != ERR_SUCCESS )
                    throw new CCOMERR( m_pTxn->ErrorType, m_pTxn->error );
}
```

tm_com_dll/src/tpcc_com.h

```
/*        FILE:               TPCC_COM.H
 *                                  Microsoft TPC-C Kit Ver. 4.20.000
 *                                  Copyright Microsoft, 1999
 *             All Rights Reserved
 *
 *                                  not yet audited
 *
 *        PURPOSE:  Header file for TPC-C COM+ class implementation.
 *
 *  Change history:
 *                  4.20.000 - first version
 */

#pragma once

#include <stdio.h>
#include "..\..\tpcc_com_ps\src\tpcc_com_ps.h"

// need to declare functions for import, unless define has already been created
// by the DLL's .cpp module for export.
#ifndef DllDecl
#define DllDecl  __declspec( dllimport )
#endif

class CCOMERR : public CBaseErr
{
          private:
                    char m_szErrorText[64];

          public:
                    // use this interface for genuine COM errors
                    CCOMERR( HRESULT hr )
                    {
                              m_hr = hr;
                              m_iErrorType = 0;
                              m_iError = 0;
                    }

                    // use this interface to impersonate a non-COM error type
                    CCOMERR( int iErrorType, int iError )
                    {
                              m_iErrorType = iErrorType;
                              m_iError = iError;
                              m_hr = S_OK;
                    }

                    int                 m_hr;
                    int                 m_iErrorType;
                    int                 m_iError;

                    // A CCOMERR class can impersonate another class, which happens if
the error
                    // was not actually a COM Services error, but was simply transmitted
back via COM.
                    int ErrorType()
                    {
                              if (m_iErrorType == 0)
                                        return ERR_TYPE_COM;
                              else
                                        return m_iErrorType;
                    }

                    int ErrorNum() {return m_hr;}

                    char *ErrorText()
                    {
                              if (m_hr == S_OK)
                                        sprintf( m_szErrorText, "Error: Class %d, error #
%d", m_iErrorType, m_iError );
                              else
                                        sprintf( m_szErrorText, "Error: COM HRESULT %x",
m_hr );
                              return m_szErrorText;
```

```
                    }
};

class DllDecl CTPCC_COM : public CTPCC_BASE
{
          private:
                    BOOL m_bSinglePool;

                    // COM Interface pointers
                    ITPCC*                        m_pNewOrder;
                    ITPCC*                        m_pPayment;
                    ITPCC*                        m_pStockLevel;
                    ITPCC*                        m_pOrderStatus;

                    struct COM_DATA
                    {
                              int ErrorType;
                              int error;
                              union
                              {
                                        NEW_ORDER_DATA                NewOrder;
                                        PAYMENT_DATA                  Payment;
                                        DELIVERY_DATA                 Delivery;
                                        STOCK_LEVEL_DATA    StockLevel;
                                        ORDER_STATUS_DATA   OrderStatus;
                              } u;
                    } *m_pTxn;

                    VARIANT m_vTxn;
          public:
                    CTPCC_COM(BOOL bSinglePool);
                    ~CTPCC_COM(void);

                    inline PNEW_ORDER_DATA                  BuffAddr_NewOrder()
          { return &m_pTxn->u.NewOrder;    };
                    inline PPAYMENT_DATA                    BuffAddr_Payment()
          { return &m_pTxn->u.Payment;     };
                    inline PDELIVERY_DATA                   BuffAddr_Delivery()
          { return &m_pTxn->u.Delivery;    };
                    inline PSTOCK_LEVEL_DATA      BuffAddr_StockLevel()         { return
&m_pTxn->u.StockLevel;  };
                    inline PORDER_STATUS_DATA     BuffAddr_OrderStatus()        { return
&m_pTxn->u.OrderStatus; };

                    void NewOrder                 ();
                    void Payment                  ();
                    void StockLevel               ();
                    void OrderStatus    ();
                    void Delivery                 () { throw new CCOMERR(E_NOTIMPL); }
// not supported
};


inline void ReleaseInterface(IUnknown *pUnk)
{
          if (pUnk)
          {
                    pUnk->Release();
                    pUnk = NULL;
          }
}
```

```
// wrapper routine for class constructor
extern "C" __declspec(dllexport) CTPCC_COM* CTPCC_COM_new(BOOL);

typedef CTPCC_COM* (TYPE_CTPCC_COM)(BOOL);
```

tpcc_com_all/src/methods.h

```
/*      FILE:           METHODS.H
 *                              Microsoft TPC-C Kit Ver. 4.20.000
 *                              Copyright Microsoft, 1999
 *               All Rights Reserved
 *
 *                              not yet audited
 *
 *      PURPOSE:        Header file for COM components.
 *
 *  Change history:
 *              4.20.000 - first version
 */


enum COMPONENT_ERROR
{
        ERR_MISSING_REGISTRY_ENTRIES = 1,
        ERR_LOADDLL_FAILED,
        ERR_GETPROCADDR_FAILED,
        ERR_UNKNOWN_DB_PROTOCOL
};

class CCOMPONENT_ERR : public CBaseErr
{
        public:
                CCOMPONENT_ERR(COMPONENT_ERROR Err)
                {
                        m_Error = Err;
                        m_szTextDetail = NULL;
                        m_SystemErr = 0;
                        m_szErrorText = NULL;
                };

                CCOMPONENT_ERR(COMPONENT_ERROR Err, char
*szTextDetail, DWORD dwSystemErr)
                {
                        m_Error = Err;
                        m_szTextDetail = new
char[strlen(szTextDetail)+1];
```

```
                        strcpy( m_szTextDetail, szTextDetail );
                        m_SystemErr = dwSystemErr;
                        m_szErrorText = NULL;
                };

                ~CCOMPONENT_ERR()
                {
                        if (m_szTextDetail != NULL)
                                delete [] m_szTextDetail;
                        if (m_szErrorText != NULL)
                                delete [] m_szErrorText;
                };

                COMPONENT_ERROR         m_Error;
                char                    *m_szTextDetail;
                char                    *m_szErrorText;
                DWORD                   m_SystemErr;

                int ErrorType() {return ERR_TYPE_COMPONENT;};
                int ErrorNum() {return m_Error;};
                char *ErrorText();
};


static void WriteMessageToEventLog(LPTSTR lpszMsg);


/////////////////////////////////////////////////////////////////////
//////////
// CTPCC_Common
class CTPCC_Common :
        public ITPCC,
        public IObjectControl,
        public IObjectConstruct,
        public CComObjectRootEx<CComSingleThreadModel>
{
public:
BEGIN_COM_MAP(CTPCC_Common)
        COM_INTERFACE_ENTRY(ITPCC)
        COM_INTERFACE_ENTRY(IObjectControl)
        COM_INTERFACE_ENTRY(IObjectConstruct)
END_COM_MAP()

        CTPCC_Common();
        ~CTPCC_Common();

// ITPCC
public:
        HRESULT __stdcall NewOrder(           VARIANT txn_in,
VARIANT* txn_out);
        HRESULT __stdcall Payment(            VARIANT txn_in,
VARIANT* txn_out);
        HRESULT __stdcall Delivery(           VARIANT txn_in,
VARIANT* txn_out) {return E_NOTIMPL;}
        HRESULT __stdcall StockLevel( VARIANT txn_in, VARIANT*
txn_out);
        HRESULT __stdcall OrderStatus(        VARIANT txn_in,
VARIANT* txn_out);

        HRESULT __stdcall CallSetComplete();

// IObjectControl
        STDMETHODIMP_(BOOL) CanBePooled() { return m_bCanBePooled;
}
        STDMETHODIMP Activate() { return S_OK; }     // we don't
support COM Services transactions (no enlistment)
        STDMETHODIMP_(void) Deactivate() { /* nothing to do */ }

// IObjectConstruct
        STDMETHODIMP Construct(IDispatch * pUnk);

        // helper methods
private:
        BOOL            m_bCanBePooled;
        CTPCC_BASE      *m_pTxn;

        struct COM_DATA
        {
                int retval;
                int error;
                union
                {
                        NEW_ORDER_DATA          NewOrder;
                        PAYMENT_DATA            Payment;
                        DELIVERY_DATA           Delivery;
                        STOCK_LEVEL_DATA        StockLevel;
                        ORDER_STATUS_DATA       OrderStatus;
                } u;
        };

};

/////////////////////////////////////////////////////////////////////
//////////
```


Copyright Dell

```
// CTPCC
class CTPCC :
        public CTPCC_Common,
        public CComCoClass<CTPCC, &CLSID_TPCC>
{
public:
DECLARE_REGISTRY_RESOURCEID(IDR_TPCC)

BEGIN_COM_MAP(CTPCC)
        COM_INTERFACE_ENTRY2(IUnknown, CComObjectRootEx)
        COM_INTERFACE_ENTRY_CHAIN(CTPCC_Common)
END_COM_MAP()

};


/////////////////////////////////////////////////////////////////
//////////
// CNewOrder
class CNewOrder :
        public CTPCC_Common,
        public CComCoClass<CNewOrder, &CLSID_NewOrder>
{
public:
DECLARE_REGISTRY_RESOURCEID(IDR_NEWORDER)

BEGIN_COM_MAP(CNewOrder)
        COM_INTERFACE_ENTRY2(IUnknown, CComObjectRootEx)
        COM_INTERFACE_ENTRY_CHAIN(CTPCC_Common)
END_COM_MAP()

// ITPCC
public:
//      HRESULT __stdcall NewOrder(          VARIANT txn_in,
VARIANT* txn_out) {return E_NOTIMPL;}
        HRESULT __stdcall Payment(           VARIANT txn_in,
VARIANT* txn_out) {return E_NOTIMPL;}
        HRESULT __stdcall StockLevel( VARIANT txn_in, VARIANT*
txn_out) {return E_NOTIMPL;}
        HRESULT __stdcall OrderStatus(       VARIANT txn_in,
VARIANT* txn_out) {return E_NOTIMPL;}
};


        ////////////////////////////////////////////////////////
/////////////////
// COrderStatus
class COrderStatus :
        public CTPCC_Common,
        public CComCoClass<COrderStatus, &CLSID_OrderStatus>
{
public:
DECLARE_REGISTRY_RESOURCEID(IDR_ORDERSTATUS)

BEGIN_COM_MAP(COrderStatus)
        COM_INTERFACE_ENTRY2(IUnknown, CComObjectRootEx)
        COM_INTERFACE_ENTRY_CHAIN(CTPCC_Common)
END_COM_MAP()

// ITPCC
public:
        HRESULT __stdcall NewOrder(          VARIANT txn_in,
VARIANT* txn_out) {return E_NOTIMPL;}
        HRESULT __stdcall Payment(           VARIANT txn_in,
VARIANT* txn_out) {return E_NOTIMPL;}
        HRESULT __stdcall StockLevel( VARIANT txn_in, VARIANT*
txn_out) {return E_NOTIMPL;}
//      HRESULT __stdcall OrderStatus(       VARIANT txn_in,
VARIANT* txn_out) {return E_NOTIMPL;}
};


/////////////////////////////////////////////////////////////////
//////////
// CPayment
class CPayment :
        public CTPCC_Common,
        public CComCoClass<CPayment, &CLSID_Payment>
{
public:
DECLARE_REGISTRY_RESOURCEID(IDR_PAYMENT)

BEGIN_COM_MAP(CPayment)
        COM_INTERFACE_ENTRY2(IUnknown, CComObjectRootEx)
        COM_INTERFACE_ENTRY_CHAIN(CTPCC_Common)
END_COM_MAP()

// ITPCC
public:
        HRESULT __stdcall NewOrder(          VARIANT txn_in,
VARIANT* txn_out) {return E_NOTIMPL;}
//      HRESULT __stdcall Payment(           VARIANT txn_in,
VARIANT* txn_out) {return E_NOTIMPL;}
```


Copyright Dell

```
        HRESULT __stdcall StockLevel( VARIANT txn_in, VARIANT*
txn_out) {return E_NOTIMPL;}
        HRESULT __stdcall OrderStatus(        VARIANT txn_in,
VARIANT* txn_out) {return E_NOTIMPL;}
};


/////////////////////////////////////////////////////////////////
//////////
// CStockLevel
class CStockLevel :
        public CTPCC_Common,
        public CComCoClass<CStockLevel, &CLSID_StockLevel>
{
public:
DECLARE_REGISTRY_RESOURCEID(IDR_STOCKLEVEL)

BEGIN_COM_MAP(CStockLevel)
        COM_INTERFACE_ENTRY2(IUnknown, CComObjectRootEx)
        COM_INTERFACE_ENTRY_CHAIN(CTPCC_Common)
END_COM_MAP()

// ITPCC
public:
        HRESULT __stdcall NewOrder(           VARIANT txn_in,
VARIANT* txn_out) {return E_NOTIMPL;}
        HRESULT __stdcall Payment(            VARIANT txn_in,
VARIANT* txn_out) {return E_NOTIMPL;}
//      HRESULT __stdcall StockLevel( VARIANT txn_in, VARIANT*
txn_out) {return E_NOTIMPL;}
        HRESULT __stdcall OrderStatus(        VARIANT txn_in,
VARIANT* txn_out) {return E_NOTIMPL;}
};
```

tpcc_com_all/src/resource.h

```
//{{NO_DEPENDENCIES}}
// Microsoft Developer Studio generated include file.
// Used by tpcc_com_all.rc
//
#define IDS_PROJNAME                    100
#define IDR_TPCC                        101
#define IDR_NEWORDER                    102
#define IDR_ORDERSTATUS                 103
#define IDR_PAYMENT                     104
#define IDR_STOCKLEVEL                  105
// Next default values for new objects
//
#ifdef APSTUDIO_INVOKED
#ifndef APSTUDIO_READONLY_SYMBOLS
#define _APS_NEXT_RESOURCE_VALUE        202
#define _APS_NEXT_COMMAND_VALUE         32768
#define _APS_NEXT_CONTROL_VALUE         201
#define _APS_NEXT_SYMED_VALUE           106
#endif
#endif
```

tpcc_com_all/src/tpcc_com_all.cpp

```
/*        FILE:               TPCC_COM_ALL.CPP
 *                                      Microsoft TPC-C Kit Ver. 4.20.000
 *                                      Copyright Microsoft, 1999
 *              All Rights Reserved
 *
 *                                      Version 4.10.000 audited by Richard Gimarc,
Performance Metrics, 3/17/99
 *
 *        PURPOSE:  Implementation for TPC-C Tuxedo class.
 *        Contact:  Charles Levine (clevine@microsoft.com)
 *
 *  Change history:
 *                  4.20.000 - updated rev number to match kit
 */

#define STRICT
#define _WIN32_WINNT 0x0400
#define _ATL_APARTMENT_THREADED

#include <stdio.h>
#include <atlbase.h>
//You may derive a class from CComModule and use it if you want to override
//something, but do not change the name of _Module
extern CComModule _Module;

#include <atlcom.h>
#include <initguid.h>
#include <transact.h>
#include <atlimpl.cpp>
#include <comsvcs.h>

#include <sqltypes.h>
#include <sql.h>
#include <sqlext.h>

#include "tpcc_com_ps.h"
#include "..\..\common\src\trans.h"                                          //tpckit
transaction header contains definations of structures specific to TPC-C
#include "..\..\common\src\txn_base.h"
#include "..\..\common\src\error.h"
#include "..\..\common\src\ReadRegistry.h"
#include "..\..\db_dblib_dll\src\tpcc_dblib.h"              // DBLIB implementation of
TPC-C txns
#include "..\..\db_odbc_dll\src\tpcc_odbc.h"                // ODBC implementation of
TPC-C txns
```

```
#include "resource.h"
#include "tpcc_com_all.h"
#include "tpcc_com_all_i.c"
#include "Methods.h"
#include "..\..\tpcc_com_ps\src\tpcc_com_ps_i.c"
#include "..\..\common\src\ReadRegistry.cpp"


CComModule _Module;

BEGIN_OBJECT_MAP(ObjectMap)
          OBJECT_ENTRY(CLSID_TPCC, CTPCC)
          OBJECT_ENTRY(CLSID_NewOrder, CNewOrder)
          OBJECT_ENTRY(CLSID_OrderStatus, COrderStatus)
          OBJECT_ENTRY(CLSID_Payment, CPayment)
          OBJECT_ENTRY(CLSID_StockLevel, CStockLevel)
END_OBJECT_MAP()


// configuration settings from registry
TPCCREGISTRYDATA    Reg;
char                                szMyComputerName[MAX_COMPUTERNAME_LENGTH+1];

static  HINSTANCE hLibInstanceDb = NULL;

TYPE_CTPCC_DBLIB    *pCTPCC_DBLIB_new;
TYPE_CTPCC_ODBC               *pCTPCC_ODBC_new;


////////////////////////////////////////////////////////////////////////////
// DLL Entry Point

extern "C"
BOOL WINAPI DllMain(HINSTANCE hInstance, DWORD dwReason, LPVOID /*lpReserved*/)
{
          char szDllName[128];

          try
          {
                    if (dwReason == DLL_PROCESS_ATTACH)
                    {
                              _Module.Init(ObjectMap, hInstance);
                              DisableThreadLibraryCalls(hInstance);

                              DWORD dwSize = MAX_COMPUTERNAME_LENGTH+1;
                              GetComputerName(szMyComputerName, &dwSize);
                              szMyComputerName[dwSize] = 0;

                              if ( ReadTPCCRegistrySettings( &Reg ) )
                                        throw new CCOMPONENT_ERR(
ERR_MISSING_REGISTRY_ENTRIES );

                              if (Reg.eDB_Protocol == DBLIB)
                              {
                                        strcpy( szDllName, Reg.szPath );
                                        strcat( szDllName, "tpcc_dblib.dll");
                                        hLibInstanceDb = LoadLibrary( szDllName );
                                        if (hLibInstanceDb == NULL)
                                                  throw new CCOMPONENT_ERR(
ERR_LOADDLL_FAILED, szDllName, GetLastError() );

                                        // get function pointer to wrapper for class
constructor
                                        pCTPCC_DBLIB_new = (TYPE_CTPCC_DBLIB*)
GetProcAddress(hLibInstanceDb,"CTPCC_DBLIB_new");
                                        if (pCTPCC_DBLIB_new == NULL)
                                                  throw new CCOMPONENT_ERR(
ERR_GETPROCADDR_FAILED, szDllName, GetLastError() );
                              }
                              else if (Reg.eDB_Protocol == ODBC)
                              {
                                        strcpy( szDllName, Reg.szPath );
                                        strcat( szDllName, "tpcc_odbc.dll");
                                        hLibInstanceDb = LoadLibrary( szDllName );
                                        if (hLibInstanceDb == NULL)
                                                  throw new CCOMPONENT_ERR(
ERR_LOADDLL_FAILED, szDllName, GetLastError() );

                                        // get function pointer to wrapper for class
constructor
                                        pCTPCC_ODBC_new = (TYPE_CTPCC_ODBC*)
GetProcAddress(hLibInstanceDb,"CTPCC_ODBC_new");
                                        if (pCTPCC_ODBC_new == NULL)
                                                  throw new CCOMPONENT_ERR(
ERR_GETPROCADDR_FAILED, szDllName, GetLastError() );
                              }
                              else
                                        throw new CCOMPONENT_ERR( ERR_UNKNOWN_DB_PROTOCOL
);
                    }
                    else if (dwReason == DLL_PROCESS_DETACH)
                              _Module.Term();

          }
          catch (CBaseErr *e)
          {
                    WriteMessageToEventLog(e->ErrorText());
                    delete e;
                    return FALSE;
          }
          catch (...)
          {
                    WriteMessageToEventLog(TEXT("Unhandled exception in object
DllMain"));
                    return FALSE;
          }

          return TRUE;        // OK
}

////////////////////////////////////////////////////////////////////////////
// Used to determine whether the DLL can be unloaded by OLE

STDAPI DllCanUnloadNow(void)
{
          return (_Module.GetLockCount()==0) ? S_OK : S_FALSE;
}

////////////////////////////////////////////////////////////////////////////
// Returns a class factory to create an object of the requested type

STDAPI DllGetClassObject(REFCLSID rclsid, REFIID riid, LPVOID* ppv)
{
          return _Module.GetClassObject(rclsid, riid, ppv);
}
```

```
////////////////////////////////////////////////////////////////////////////
// DllRegisterServer - Adds entries to the system registry

STDAPI DllRegisterServer(void)
{
          // registers object, typelib and all interfaces in typelib
          return _Module.RegisterServer(TRUE);
}

////////////////////////////////////////////////////////////////////////////
// DllUnregisterServer - Removes entries from the system registry

STDAPI DllUnregisterServer(void)
{
          _Module.UnregisterServer();
          return S_OK;
}


static void WriteMessageToEventLog(LPTSTR lpszMsg)
{
    TCHAR   szMsg[256];
    HANDLE  hEventSource;
    LPTSTR  lpszStrings[2];

    // Use event logging to log the error.
    //
    hEventSource = RegisterEventSource(NULL, TEXT("tpcc_com_all.dll"));

    _stprintf(szMsg, TEXT("Error in COM+ TPC-C Component: "));
    lpszStrings[0] = szMsg;
    lpszStrings[1] = lpszMsg;

    if (hEventSource != NULL)
        {
        ReportEvent(hEventSource, // handle of event source
            EVENTLOG_ERROR_TYPE,  // event type
            0,                    // event category
            0,                    // event ID
            NULL,                 // current user's SID
            2,                    // strings in lpszStrings
            0,                    // no bytes of raw data
            (LPCTSTR *)lpszStrings,    // array of error strings
            NULL);                // no raw data

        (VOID) DeregisterEventSource(hEventSource);
    }
}

inline void ReleaseInterface(IUnknown *pUnk)
{
          if (pUnk)
          {
                    pUnk->Release();
                    pUnk = NULL;
          }
}

/* FUNCTION: CCOMPONENT_ERR::ErrorText
 *
 */

char* CCOMPONENT_ERR::ErrorText(void)
{
          static SERRORMSG errorMsgs[] =
          {
                    { ERR_MISSING_REGISTRY_ENTRIES,         "Required entries missing
from registry."                                        },
                    { ERR_LOADDLL_FAILED,                           "Load of DLL
failed.  DLL="
          },
                    { ERR_GETPROCADDR_FAILED,               "Could not map proc in DLL.
GetProcAddr error.  DLL="     },
                    { ERR_UNKNOWN_DB_PROTOCOL,              "Unknown database protocol
specified in registry."                 },
                    { 0,
          ""
                                                            }
          };

          char szTmp[256];
          int i = 0;
          while (TRUE)
          {
                    if (errorMsgs[i].szMsg[0] == 0)
                    {
                              strcpy( szTmp, "Unknown error number." );
                              break;
                    }
                    if (m_Error == errorMsgs[i].iError)
                    {
                              strcpy( szTmp, errorMsgs[i].szMsg );
                              break;
                    }
                    i++;
          }

          if (m_szTextDetail)
                    strcat( szTmp, m_szTextDetail );
          if (m_SystemErr)
                    wsprintf( szTmp+strlen(szTmp), "  Error=%d", m_SystemErr );

          m_szErrorText = new char[strlen(szTmp)+1];
          strcpy( m_szErrorText, szTmp );
          return m_szErrorText;
}


CTPCC_Common::CTPCC_Common()
{
          m_pTxn = NULL;
          m_bCanBePooled = TRUE;
}

CTPCC_Common::~CTPCC_Common()
{
          if (m_pTxn)
                    delete m_pTxn;
}

HRESULT CTPCC_Common::CallSetComplete()
{
          IObjectContext* pObjectContext = NULL;

          // get our object context
```

```
        HRESULT hr = CoGetObjectContext( IID_IObjectContext, (void **)&pObjectContext
);
        pObjectContext->SetComplete();
        ReleaseInterface(pObjectContext);
        return hr;
}

//
//      called by the ctor activator
//
STDMETHODIMP CTPCC_Common::Construct(IDispatch * pUnk)
{
        // Code to access construction string, if needed later...
        //      if (!pUnk)
        //              return E_UNEXPECTED;
        //      IObjectConstructString * pString = NULL;
        //      HRESULT hr = pUnk->QueryInterface(IID_IObjectConstructString, (void
**)&pString);
        //      pString->Release();

        try
        {
                if (Reg.eDB_Protocol == ODBC)
                        m_pTxn = pCTPCC_ODBC_new( Reg.szDbServer, Reg.szDbUser,
Reg.szDbPassword, szMyComputerName, Reg.szDbName );
                else if (Reg.eDB_Protocol == DBLIB)
                        m_pTxn = pCTPCC_DBLIB_new( Reg.szDbServer, Reg.szDbUser,
Reg.szDbPassword, szMyComputerName, Reg.szDbName );
        }
        catch (CBaseErr *e)
        {
                WriteMessageToEventLog(e->ErrorText());
                delete e;
                return E_FAIL;
        }
        catch (...)
        {
                WriteMessageToEventLog(TEXT("Unhandled exception in object
::Construct"));
                return E_FAIL;
        }

        return S_OK;
}

HRESULT CTPCC_Common::NewOrder(VARIANT txn_in, VARIANT* txn_out)
{
        PNEW_ORDER_DATA     pNewOrder;
        COM_DATA            *pData;
        try
        {
                pData = (COM_DATA*)txn_in.parray->pvData;
                pNewOrder = m_pTxn->BuffAddr_NewOrder();

                memcpy(pNewOrder, &pData->u.NewOrder, sizeof(NEW_ORDER_DATA));

                m_pTxn->NewOrder();           // do the actual txn

                VariantInit(txn_out);
                txn_out->vt = VT_SAFEARRAY;
                txn_out->parray = SafeArrayCreateVector(VT_UI1,
                                                                        txn_in.parray-
>rgsabound->cElements,
                                                                        txn_in.parray-
>rgsabound->cElements);
                pData = (COM_DATA*) txn_out->parray->pvData;

                memcpy( &pData->u.NewOrder, pNewOrder, sizeof(NEW_ORDER_DATA));

                pData->retval = ERR_SUCCESS;
                pData->error = 0;
                return S_OK;
        }
        catch (CBaseErr *e)
        {
                // check for lost database connection; if yes, component is toast
                if ( ((e->ErrorType() == ERR_TYPE_DBLIB) && (e->ErrorNum() == 10005))
||
                        ((e->ErrorType() == ERR_TYPE_ODBC) && (e->ErrorNum() ==
10054)) )
                        m_bCanBePooled = FALSE;

                pData->retval = e->ErrorType();
                pData->error = e->ErrorNum();
                delete e;
                return E_FAIL;
        }
        catch (...)
        {
                WriteMessageToEventLog(TEXT("Unhandled exception."));
                pData->retval = ERR_TYPE_LOGIC;
                pData->error = 0;
                m_bCanBePooled = FALSE;
                return E_FAIL;
        }
}

HRESULT CTPCC_Common::Payment(VARIANT txn_in, VARIANT* txn_out)
{
        PPAYMENT_DATA       pPayment;
        COM_DATA            *pData;
        try
        {
                pData = (COM_DATA*)txn_in.parray->pvData;
                pPayment = m_pTxn->BuffAddr_Payment();

                memcpy(pPayment, &pData->u.Payment, sizeof(PAYMENT_DATA));

                m_pTxn->Payment();            // do the actual txn

                VariantInit(txn_out);
                txn_out->vt = VT_SAFEARRAY;
                txn_out->parray = SafeArrayCreateVector( VT_UI1,
                                                                        txn_in.parray-
>rgsabound->cElements,
                                                                        txn_in.parray-
>rgsabound->cElements);
                pData = (COM_DATA*) txn_out->parray->pvData;

                memcpy( &pData->u.Payment, pPayment, sizeof(PAYMENT_DATA));

                pData->retval = ERR_SUCCESS;
                pData->error = 0;
                return S_OK;
        }
        catch (CBaseErr *e)
```

```
        {
                // check for lost database connection; if yes, component is toast
                if ( ((e->ErrorType() == ERR_TYPE_DBLIB) && (e->ErrorNum() == 10005))
||
                        ((e->ErrorType() == ERR_TYPE_ODBC) && (e->ErrorNum() ==
10054)) )
                        m_bCanBePooled = FALSE;

                pData->retval = e->ErrorType();
                pData->error = e->ErrorNum();
                delete e;
                return E_FAIL;
        }
        catch (...)
        {
                WriteMessageToEventLog(TEXT("Unhandled exception."));
                pData->retval = ERR_TYPE_LOGIC;
                pData->error = 0;
                m_bCanBePooled = FALSE;
                return E_FAIL;
        }
}

HRESULT CTPCC_Common::StockLevel(VARIANT txn_in, VARIANT* txn_out)
{
        PSTOCK_LEVEL_DATA   pStockLevel;
        COM_DATA                    *pData;

        try
        {
                pData = (COM_DATA*)txn_in.parray->pvData;
                pStockLevel = m_pTxn->BuffAddr_StockLevel();

                memcpy(pStockLevel, &pData->u.StockLevel, sizeof(STOCK_LEVEL_DATA));

                m_pTxn->StockLevel();

                VariantInit(txn_out);
                txn_out->vt = VT_SAFEARRAY;
                txn_out->parray = SafeArrayCreateVector( VT_UI1,
                                                                        txn_in.parray-
>rgsabound->cElements,
                                                                        txn_in.parray-
>rgsabound->cElements);
                pData = (COM_DATA*)txn_out->parray->pvData;

                memcpy( &pData->u.StockLevel, pStockLevel, sizeof(STOCK_LEVEL_DATA));

                pData->retval = ERR_SUCCESS;
                pData->error = 0;
                return S_OK;
        }
        catch (CBaseErr *e)
        {
                // check for lost database connection; if yes, component is toast
                if ( ((e->ErrorType() == ERR_TYPE_DBLIB) && (e->ErrorNum() == 10005))
||
                        ((e->ErrorType() == ERR_TYPE_ODBC) && (e->ErrorNum() ==
10054)) )
                        m_bCanBePooled = FALSE;

                pData->retval = e->ErrorType();
                pData->error = e->ErrorNum();
                delete e;
                return E_FAIL;
        }
        catch (...)
        {
                WriteMessageToEventLog(TEXT("Unhandled exception."));
                pData->retval = ERR_TYPE_LOGIC;
                pData->error = 0;
                m_bCanBePooled = FALSE;
                return E_FAIL;
        }
}

HRESULT CTPCC_Common::OrderStatus(VARIANT txn_in, VARIANT* txn_out)
{
        PORDER_STATUS_DATA  pOrderStatus;
        COM_DATA                    *pData;
        try
        {
                pData = (COM_DATA*)txn_in.parray->pvData;
                pOrderStatus = m_pTxn->BuffAddr_OrderStatus();

                memcpy(pOrderStatus, &pData->u.OrderStatus,
sizeof(ORDER_STATUS_DATA));

                m_pTxn->OrderStatus();

                VariantInit(txn_out);
                txn_out->vt = VT_SAFEARRAY;
                txn_out->parray = SafeArrayCreateVector( VT_UI1,
                                                                        txn_in.parray-
>rgsabound->cElements,
                                                                        txn_in.parray-
>rgsabound->cElements);
                pData = (COM_DATA*)txn_out->parray->pvData;

                memcpy( &pData->u.OrderStatus, pOrderStatus,
sizeof(ORDER_STATUS_DATA));

                pData->retval = ERR_SUCCESS;
                pData->error = 0;
                return S_OK;
        }
        catch (CBaseErr *e)
        {
                // check for lost database connection; if yes, component is toast
                if ( ((e->ErrorType() == ERR_TYPE_DBLIB) && (e->ErrorNum() == 10005))
||
                        ((e->ErrorType() == ERR_TYPE_ODBC) && (e->ErrorNum() ==
10054)) )
                        m_bCanBePooled = FALSE;

                pData->retval = e->ErrorType();
                pData->error = e->ErrorNum();
                delete e;
                return E_FAIL;
        }
        catch (...)
        {
                WriteMessageToEventLog(TEXT("Unhandled exception."));
                pData->retval = ERR_TYPE_LOGIC;
                pData->error = 0;
                m_bCanBePooled = FALSE;
```

```
                return E_FAIL;
        }
}
```

tpcc_com_all/src/tpcc_com_all.def

```
; tpcc_com_all.def : Declares the module parameters.

LIBRARY      "tpcc_com_all.dll"

EXPORTS
          DllCanUnloadNow     @1 PRIVATE
          DllGetClassObject   @2 PRIVATE
          DllRegisterServer   @3 PRIVATE
          DllUnregisterServer @4 PRIVATE
```

tpcc_com_all/src/tpcc_com_all.h

```
#pragma warning( disable: 4049 )  /* more than 64k source lines */

/* this ALWAYS GENERATED file contains the definitions for the interfaces */


 /* File created by MIDL compiler version 5.03.0280 */
/* at Sat Apr 08 16:40:18 2000
 */
/* Compiler settings for .\src\tpcc_com_all.idl:
    Oicf (OptLev=i2), W1, Zp8, env=Win32 (32b run), ms_ext, c_ext
    error checks: allocation ref bounds_check enum stub_data
    VC __declspec() decoration level:
         __declspec(uuid()), __declspec(selectany), __declspec(novtable)
         DECLSPEC_UUID(), MIDL_INTERFACE()
*/
//@@MIDL_FILE_HEADING(  )


/* verify that the <rpcndr.h> version is high enough to compile this file*/
#ifndef __REQUIRED_RPCNDR_H_VERSION__
#define __REQUIRED_RPCNDR_H_VERSION__ 440
#endif

#include "rpc.h"
#include "rpcndr.h"

#ifndef __tpcc_com_all_h__
#define __tpcc_com_all_h__

/* Forward Declarations */

#ifndef __TPCC_FWD_DEFINED__
#define __TPCC_FWD_DEFINED__

#ifdef __cplusplus
typedef class TPCC TPCC;
#else
typedef struct TPCC TPCC;
#endif /* __cplusplus */

#endif    /* __TPCC_FWD_DEFINED__ */


#ifndef __NewOrder_FWD_DEFINED__
#define __NewOrder_FWD_DEFINED__

#ifdef __cplusplus
typedef class NewOrder NewOrder;
#else
typedef struct NewOrder NewOrder;
#endif /* __cplusplus */

#endif    /* __NewOrder_FWD_DEFINED__ */


#ifndef __OrderStatus_FWD_DEFINED__
#define __OrderStatus_FWD_DEFINED__

#ifdef __cplusplus
typedef class OrderStatus OrderStatus;
#else
typedef struct OrderStatus OrderStatus;
#endif /* __cplusplus */

#endif    /* __OrderStatus_FWD_DEFINED__ */


#ifndef __Payment_FWD_DEFINED__
#define __Payment_FWD_DEFINED__

#ifdef __cplusplus
typedef class Payment Payment;
#else
typedef struct Payment Payment;
#endif /* __cplusplus */

#endif    /* __Payment_FWD_DEFINED__ */


#ifndef __StockLevel_FWD_DEFINED__
#define __StockLevel_FWD_DEFINED__

#ifdef __cplusplus
typedef class StockLevel StockLevel;
#else
typedef struct StockLevel StockLevel;
#endif /* __cplusplus */

#endif    /* __StockLevel_FWD_DEFINED__ */


/* header files for imported files */
#include "oaidl.h"
#include "ocidl.h"
#include "tpcc_com_ps.h"

#ifdef __cplusplus
```

```
extern "C"{
#endif

void __RPC_FAR * __RPC_USER MIDL_user_allocate(size_t);
void __RPC_USER MIDL_user_free( void __RPC_FAR * );

/* interface __MIDL_itf_tpcc_com_all_0000 */
/* [local] */









extern RPC_IF_HANDLE __MIDL_itf_tpcc_com_all_0000_v0_0_c_ifspec;
extern RPC_IF_HANDLE __MIDL_itf_tpcc_com_all_0000_v0_0_s_ifspec;


#ifndef __TPCCLib_LIBRARY_DEFINED__
#define __TPCCLib_LIBRARY_DEFINED__

/* library TPCCLib */
/* [helpstring][version][uuid] */


EXTERN_C const IID LIBID_TPCCLib;

EXTERN_C const CLSID CLSID_TPCC;

#ifdef __cplusplus

class DECLSPEC_UUID("122A3128-2520-11D3-BA71-00C04FBFE08B")
TPCC;
#endif

EXTERN_C const CLSID CLSID_NewOrder;

#ifdef __cplusplus

class DECLSPEC_UUID("975BAABF-84A7-11D2-BA47-00C04FBFE08B")
NewOrder;
#endif

EXTERN_C const CLSID CLSID_OrderStatus;

#ifdef __cplusplus

class DECLSPEC_UUID("266836AD-A50D-11D2-BA4E-00C04FBFE08B")
OrderStatus;
#endif

EXTERN_C const CLSID CLSID_Payment;

#ifdef __cplusplus

class DECLSPEC_UUID("CD02F7EF-A4FA-11D2-BA4E-00C04FBFE08B")
Payment;
#endif

EXTERN_C const CLSID CLSID_StockLevel;

#ifdef __cplusplus

class DECLSPEC_UUID("2668369E-A50D-11D2-BA4E-00C04FBFE08B")
StockLevel;
#endif
#endif /* __TPCCLib_LIBRARY_DEFINED__ */

/* Additional Prototypes for ALL interfaces */

/* end of Additional Prototypes */

#ifdef __cplusplus
}
#endif

#endif
```

tpcc_com_all/src/tpcc_com_all.idl

```
/*        FILE:               TPCC.IDL
 *                                    Microsoft TPC-C Kit Ver. 4.20.000
 *                                    Copyright Microsoft, 1999
 *              All Rights Reserved
 *
 *                                    not yet audited
 *
 *        PURPOSE:  IDL source for TPCC.dll.  This file is processed by the MIDL tool to
 *                                    produce the type library (TPCC.tlb) and
marshalling code.
 *
 *  Change history:
 *                  4.20.000 - first version
 */

interface TPCC;
interface NewOrder;
interface OrderStatus;
interface Payment;
interface StockLevel;


import "oaidl.idl";
import "ocidl.idl";
import "..\tpcc_com_ps\src\tpcc_com_ps.idl";

[
          uuid(122A3117-2520-11D3-BA71-00C04FBFE08B),
          version(1.0),
          helpstring("TPC-C 1.0 Type Library")
]
library TPCCLib
{
          importlib("stdole32.tlb");
          importlib("stdole2.tlb");

          [
                    uuid(122A3128-2520-11D3-BA71-00C04FBFE08B),
```

```
                helpstring("All Txns Class")
        ]
        coclass TPCC
        {
                [default] interface ITPCC;
        };


        [
                uuid(975BAABF-84A7-11D2-BA47-00C04FBFE08B),
                helpstring("NewOrder Class")
        ]
        coclass NewOrder
        {
                [default] interface ITPCC;
        };


        [
                uuid(266836AD-A50D-11D2-BA4E-00C04FBFE08B),
                helpstring("OrderStatus Class")
        ]
        coclass OrderStatus
        {
                [default] interface ITPCC;
        };


        [
                uuid(CD02F7EF-A4FA-11D2-BA4E-00C04FBFE08B),
                helpstring("Payment Class")
        ]
        coclass Payment
        {
                [default] interface ITPCC;
        };


        [
                uuid(2668369E-A50D-11D2-BA4E-00C04FBFE08B),
                helpstring("StockLevel Class")
        ]
        coclass StockLevel
        {
                [default] interface ITPCC;
        };

};
```

tpcc_com_all/src/tpcc_com_all.rc

```
//Microsoft Developer Studio generated resource script.
//
#include "resource.h"

#define APSTUDIO_READONLY_SYMBOLS
/////////////////////////////////////////////////////////////////////////////
//
// Generated from the TEXTINCLUDE 2 resource.
//
#include "winres.h"

/////////////////////////////////////////////////////////////////////////////
#undef APSTUDIO_READONLY_SYMBOLS

/////////////////////////////////////////////////////////////////////////////
// English (U.S.) resources

#if !defined(AFX_RESOURCE_DLL) || defined(AFX_TARG_ENU)
#ifdef _WIN32
LANGUAGE LANG_ENGLISH, SUBLANG_ENGLISH_US
#pragma code_page(1252)
#endif //_WIN32

#ifdef APSTUDIO_INVOKED
/////////////////////////////////////////////////////////////////////////////
//
// TEXTINCLUDE
//

1 TEXTINCLUDE DISCARDABLE
BEGIN
    "resource.h\0"
END

2 TEXTINCLUDE DISCARDABLE
BEGIN
    "#include ""winres.h""\r\n"
    "\0"
END

3 TEXTINCLUDE DISCARDABLE
BEGIN
    "1 TYPELIB ""tpcc_com_all.tlb""\r\n"
    "\0"
END

#endif    // APSTUDIO_INVOKED


#ifndef _MAC
/////////////////////////////////////////////////////////////////////////////
//
// Version
//

VS_VERSION_INFO VERSIONINFO
 FILEVERSION 1,0,0,1
 PRODUCTVERSION 1,0,0,1
 FILEFLAGSMASK 0x3fL
#ifdef _DEBUG
 FILEFLAGS 0x1L
#else
 FILEFLAGS 0x0L
#endif
 FILEOS 0x4L
 FILETYPE 0x2L
 FILESUBTYPE 0x0L
BEGIN
    BLOCK "StringFileInfo"
    BEGIN
        BLOCK "040904B0"
```

```
        BEGIN
            VALUE "CompanyName", "\0"
            VALUE "FileDescription", "tpcc_com_all Module\0"
            VALUE "FileVersion", "1, 0, 0, 1\0"
            VALUE "InternalName", "TPCCNEWORDER\0"
            VALUE "LegalCopyright", "Copyright 1997\0"
            VALUE "OriginalFilename", "tpcc_com_all.DLL\0"
            VALUE "ProductName", "tpcc_com_all Module\0"
            VALUE "ProductVersion", "1, 0, 0, 1\0"
            VALUE "OLESelfRegister", "\0"
        END
    END
    BLOCK "VarFileInfo"
    BEGIN
        VALUE "Translation", 0x409, 1200
    END
END

#endif    // !_MAC


/////////////////////////////////////////////////////////////////////////////
//
// REGISTRY
//

IDR_TPCC                REGISTRY DISCARDABLE    "tpcc_com_all.rgs"
IDR_NEWORDER            REGISTRY DISCARDABLE    "tpcc_com_no.rgs"
IDR_ORDERSTATUS         REGISTRY DISCARDABLE    "tpcc_com_os.rgs"
IDR_PAYMENT             REGISTRY DISCARDABLE    "tpcc_com_pay.rgs"
IDR_STOCKLEVEL          REGISTRY DISCARDABLE    "tpcc_com_sl.rgs"

/////////////////////////////////////////////////////////////////////////////
//
// String Table
//

STRINGTABLE DISCARDABLE
BEGIN
    IDS_PROJNAME            "tpcc_com_all"
END

#endif    // English (U.S.) resources
/////////////////////////////////////////////////////////////////////////////



#ifndef APSTUDIO_INVOKED
/////////////////////////////////////////////////////////////////////////////
//
// Generated from the TEXTINCLUDE 3 resource.
//
1 TYPELIB "tpcc_com_all.tlb"

/////////////////////////////////////////////////////////////////////////////
#endif    // not APSTUDIO_INVOKED
```

tpcc_com_all/src/tpcc_com_all.rgs

```
HKCR
{
          TPCC.AllTxns.1 = s 'All Txns Class'
          {
                    CLSID = s '{122A3128-2520-11D3-BA71-00C04FBFE08B}'
          }
          TPCC.AllTxns = s 'TPCC Class'
          {
                    CurVer = s 'TPCC.AllTxns.1'
          }
          NoRemove CLSID
          {
                    ForceRemove {122A3128-2520-11D3-BA71-00C04FBFE08B} = s 'TPCC Class'
                    {
                              ProgID = s 'TPCC.AllTxns.1'
                              VersionIndependentProgID = s 'TPCC.AllTxns'
                              InprocServer32 = s '%MODULE%'
                              {
                                        val ThreadingModel = s 'Both'
                              }
                    }
          }
}
```

tpcc_com_all/src/tpcc_com_all_i.c

```
#pragma warning( disable: 4049 )  /* more than 64k source lines */

/* this ALWAYS GENERATED file contains the IIDs and CLSIDs */

/* link this file in with the server and any clients */


 /* File created by MIDL compiler version 5.03.0280 */
/* at Sat Apr 08 16:40:18 2000
 */
/* Compiler settings for .\src\tpcc_com_all.idl:
    Oicf (OptLev=i2), W1, Zp8, env=Win32 (32b run), ms_ext, c_ext
    error checks: allocation ref bounds_check enum stub_data
    VC __declspec() decoration level:
         __declspec(uuid()), __declspec(selectany), __declspec(novtable)
         DECLSPEC_UUID(), MIDL_INTERFACE()
*/
//@@MIDL_FILE_HEADING(  )

#if !defined(_M_IA64) && !defined(_M_AXP64)

#ifdef __cplusplus
extern "C"{
#endif
```

```
#include <rpc.h>
#include <rpcndr.h>

#ifdef _MIDL_USE_GUIDDEF_

#ifndef INITGUID
#define INITGUID
#include <guiddef.h>
#undef INITGUID
#else
#include <guiddef.h>
#endif

#define MIDL_DEFINE_GUID(type,name,l,w1,w2,b1,b2,b3,b4,b5,b6,b7,b8) \
        DEFINE_GUID(name,l,w1,w2,b1,b2,b3,b4,b5,b6,b7,b8)

#else // !_MIDL_USE_GUIDDEF_

#ifndef __IID_DEFINED__
#define __IID_DEFINED__

typedef struct _IID
{
    unsigned long x;
    unsigned short s1;
    unsigned short s2;
    unsigned char  c[8];
} IID;

#endif // __IID_DEFINED__

#ifndef CLSID_DEFINED
#define CLSID_DEFINED
typedef IID CLSID;
#endif // CLSID_DEFINED

#define MIDL_DEFINE_GUID(type,name,l,w1,w2,b1,b2,b3,b4,b5,b6,b7,b8) \
        const type name = {l,w1,w2,{b1,b2,b3,b4,b5,b6,b7,b8}}

#endif !_MIDL_USE_GUIDDEF_

MIDL_DEFINE_GUID(IID,
LIBID_TPCCLib,0x122A3117,0x2520,0x11D3,0xBA,0x71,0x00,0xC0,0x4F,0xBF,0xE0,0x8B);


MIDL_DEFINE_GUID(CLSID,
CLSID_TPCC,0x122A3128,0x2520,0x11D3,0xBA,0x71,0x00,0xC0,0x4F,0xBF,0xE0,0x8B);


MIDL_DEFINE_GUID(CLSID,
CLSID_NewOrder,0x975BAABF,0x84A7,0x11D2,0xBA,0x47,0x00,0xC0,0x4F,0xBF,0xE0,0x8B);


MIDL_DEFINE_GUID(CLSID,
CLSID_OrderStatus,0x266836AD,0xA50D,0x11D2,0xBA,0x4E,0x00,0xC0,0x4F,0xBF,0xE0,0x8B);


MIDL_DEFINE_GUID(CLSID,
CLSID_Payment,0xCD02F7EF,0xA4FA,0x11D2,0xBA,0x4E,0x00,0xC0,0x4F,0xBF,0xE0,0x8B);
MIDL_DEFINE_GUID(CLSID,
CLSID_StockLevel,0x2668369E,0xA50D,0x11D2,0xBA,0x4E,0x00,0xC0,0x4F,0xBF,0xE0,0x8B);

#undef MIDL_DEFINE_GUID

#ifdef __cplusplus
}
#endif



#endif /* !defined(_M_IA64) && !defined(_M_AXP64)*/


#pragma warning( disable: 4049 )  /* more than 64k source lines */

/* this ALWAYS GENERATED file contains the IIDs and CLSIDs */

/* link this file in with the server and any clients */


 /* File created by MIDL compiler version 5.03.0280 */
/* at Sat Apr 08 16:40:18 2000
 */
/* Compiler settings for .\src\tpcc_com_all.idl:
    Oicf (OptLev=i2), W1, Zp8, env=Win64 (32b run,appending), ms_ext, c_ext, robust
    error checks: allocation ref bounds_check enum stub_data
    VC __declspec() decoration level:
         __declspec(uuid()), __declspec(selectany), __declspec(novtable)
         DECLSPEC_UUID(), MIDL_INTERFACE()
*/
//@@MIDL_FILE_HEADING(  )

#if defined(_M_IA64) || defined(_M_AXP64)

#ifdef __cplusplus
extern "C"{
#endif


#include <rpc.h>
#include <rpcndr.h>

#ifdef _MIDL_USE_GUIDDEF_

#ifndef INITGUID
#define INITGUID
#include <guiddef.h>
#undef INITGUID
#else
#include <guiddef.h>
#endif

#define MIDL_DEFINE_GUID(type,name,l,w1,w2,b1,b2,b3,b4,b5,b6,b7,b8) \
        DEFINE_GUID(name,l,w1,w2,b1,b2,b3,b4,b5,b6,b7,b8)

#else // !_MIDL_USE_GUIDDEF_

#ifndef __IID_DEFINED__
#define __IID_DEFINED__

typedef struct _IID
{
```


Copyright Dell

```
    unsigned long x;
    unsigned short s1;
    unsigned short s2;
    unsigned char  c[8];
} IID;

#endif // __IID_DEFINED__

#ifndef CLSID_DEFINED
#define CLSID_DEFINED
typedef IID CLSID;
#endif // CLSID_DEFINED

#define MIDL_DEFINE_GUID(type,name,l,w1,w2,b1,b2,b3,b4,b5,b6,b7,b8) \
        const type name = {l,w1,w2,{b1,b2,b3,b4,b5,b6,b7,b8}}

#endif !_MIDL_USE_GUIDDEF_

MIDL_DEFINE_GUID(IID,
LIBID_TPCCLib,0x122A3117,0x2520,0x11D3,0xBA,0x71,0x00,0xC0,0x4F,0xBF,0xE0,0x8B);


MIDL_DEFINE_GUID(CLSID,
CLSID_TPCC,0x122A3128,0x2520,0x11D3,0xBA,0x71,0x00,0xC0,0x4F,0xBF,0xE0,0x8B);


MIDL_DEFINE_GUID(CLSID,
CLSID_NewOrder,0x975BAABF,0x84A7,0x11D2,0xBA,0x47,0x00,0xC0,0x4F,0xBF,0xE0,0x8B);


MIDL_DEFINE_GUID(CLSID,
CLSID_OrderStatus,0x266836AD,0xA50D,0x11D2,0xBA,0x4E,0x00,0xC0,0x4F,0xBF,0xE0,0x8B);


MIDL_DEFINE_GUID(CLSID,
CLSID_Payment,0xCD02F7EF,0xA4FA,0x11D2,0xBA,0x4E,0x00,0xC0,0x4F,0xBF,0xE0,0x8B);


MIDL_DEFINE_GUID(CLSID,
CLSID_StockLevel,0x2668369E,0xA50D,0x11D2,0xBA,0x4E,0x00,0xC0,0x4F,0xBF,0xE0,0x8B);

#undef MIDL_DEFINE_GUID

#ifdef __cplusplus
}
#endif



#endif /* defined(_M_IA64) || defined(_M_AXP64)*/
```

tpcc_com_all/src/tpcc_com_no.rgs

```
HKCR
{
        TPCC.NewOrder.1 = s 'NewOrder Class'
        {
                CLSID = s '{975BAABF-84A7-11D2-BA47-00C04FBFE08B}'
        }
        TPCC.NewOrder = s 'NewOrder Class'
        {
                CurVer = s 'TPCC.NewOrder.1'
        }
        NoRemove CLSID
        {
                ForceRemove {975BAABF-84A7-11D2-BA47-00C04FBFE08B} = s 'NewOrder
Class'
                {
                        ProgID = s 'TPCC.NewOrder.1'
                        VersionIndependentProgID = s 'TPCC.NewOrder'
                        InprocServer32 = s '%MODULE%'
                        {
                                val ThreadingModel = s 'Both'
                        }
                }
        }
}
```

tpcc_com_all/src/tpcc_com_os.rgs

```
HKCR
{
        TPCC.OrderStatus.1 = s 'OrderStatus Class'
        {
                CLSID = s '{266836AD-A50D-11D2-BA4E-00C04FBFE08B}'
        }
        TPCC.OrderStatus = s 'OrderStatus Class'
        {
                CurVer = s 'TPCC.OrderStatus.1'
        }
        NoRemove CLSID
        {
                ForceRemove {266836AD-A50D-11D2-BA4E-00C04FBFE08B} = s 'OrderStatus
Class'
                {
                        ProgID = s 'TPCC.OrderStatus.1'
                        VersionIndependentProgID = s 'TPCC.OrderStatus'
                        InprocServer32 = s '%MODULE%'
                        {
                                val ThreadingModel = s 'Both'
                        }
                }
        }
}
```

tpcc_com_all/src/tpcc_com_pay.rgs

```
HKCR
{
        TPCC.Payment.1 = s 'Payment Class'
```


Copyright Dell

```
        {
                CLSID = s '{CD02F7EF-A4FA-11D2-BA4E-00C04FBFE08B}'
        }
        TPCC.Payment = s 'Payment Class'
        {
                CurVer = s 'TPCC.Payment.1'
        }
        NoRemove CLSID
        {
                ForceRemove {CD02F7EF-A4FA-11D2-BA4E-00C04FBFE08B} = s 'Payment
Class'
                {
                        ProgID = s 'TPCC.Payment.1'
                        VersionIndependentProgID = s 'TPCC.Payment'
                        InprocServer32 = s '%MODULE%'
                        {
                                val ThreadingModel = s 'Both'
                        }
                }
        }
}
```

tpcc_com_all/src/tpcc_com_ps.h

```
#pragma warning( disable: 4049 )  /* more than 64k source lines */

/* this ALWAYS GENERATED file contains the definitions for the interfaces */


 /* File created by MIDL compiler version 5.03.0280 */
/* at Sat Apr 08 16:40:10 2000
 */
/* Compiler settings for .\src\tpcc_com_ps.idl:
    Oicf (OptLev=i2), W1, Zp8, env=Win32 (32b run), ms_ext, c_ext
    error checks: allocation ref bounds_check enum stub_data
    VC __declspec() decoration level:
         __declspec(uuid()), __declspec(selectany), __declspec(novtable)
         DECLSPEC_UUID(), MIDL_INTERFACE()
*/
//@@MIDL_FILE_HEADING(  )


/* verify that the <rpcndr.h> version is high enough to compile this file*/
#ifndef __REQUIRED_RPCNDR_H_VERSION__
#define __REQUIRED_RPCNDR_H_VERSION__ 440
#endif

#include "rpc.h"
#include "rpcndr.h"

#ifndef __RPCNDR_H_VERSION__
#error this stub requires an updated version of <rpcndr.h>
#endif // __RPCNDR_H_VERSION__

#ifndef COM_NO_WINDOWS_H
#include "windows.h"
#include "ole2.h"
#endif /*COM_NO_WINDOWS_H*/

#ifndef __tpcc_com_ps_h__
#define __tpcc_com_ps_h__

/* Forward Declarations */

#ifndef __ITPCC_FWD_DEFINED__
#define __ITPCC_FWD_DEFINED__
typedef interface ITPCC ITPCC;
#endif    /* __ITPCC_FWD_DEFINED__ */


/* header files for imported files */
#include "oaidl.h"
#include "ocidl.h"

#ifdef __cplusplus
extern "C"{
#endif

void __RPC_FAR * __RPC_USER MIDL_user_allocate(size_t);
void __RPC_USER MIDL_user_free( void __RPC_FAR * );

/* interface __MIDL_itf_tpcc_com_ps_0000 */
/* [local] */




extern RPC_IF_HANDLE __MIDL_itf_tpcc_com_ps_0000_v0_0_c_ifspec;
extern RPC_IF_HANDLE __MIDL_itf_tpcc_com_ps_0000_v0_0_s_ifspec;

#ifndef __ITPCC_INTERFACE_DEFINED__
#define __ITPCC_INTERFACE_DEFINED__

/* interface ITPCC */
/* [unique][helpstring][uuid][oleautomation][object] */


EXTERN_C const IID IID_ITPCC;

#if defined(__cplusplus) && !defined(CINTERFACE)

    MIDL_INTERFACE("FEEE6AA2-84B1-11d2-BA47-00C04FBFE08B")
    ITPCC : public IUnknown
    {
    public:
        virtual HRESULT __stdcall NewOrder(
            /* [in] */ VARIANT txn_in,
            /* [out] */ VARIANT __RPC_FAR *txn_out) = 0;

        virtual HRESULT __stdcall Payment(
            /* [in] */ VARIANT txn_in,
            /* [out] */ VARIANT __RPC_FAR *txn_out) = 0;

        virtual HRESULT __stdcall Delivery(
            /* [in] */ VARIANT txn_in,
            /* [out] */ VARIANT __RPC_FAR *txn_out) = 0;

        virtual HRESULT __stdcall StockLevel(
            /* [in] */ VARIANT txn_in,
```


Copyright Dell

```
            /* [out] */ VARIANT __RPC_FAR *txn_out) = 0;

        virtual HRESULT __stdcall OrderStatus(
            /* [in] */ VARIANT txn_in,
            /* [out] */ VARIANT __RPC_FAR *txn_out) = 0;

        virtual HRESULT __stdcall CallSetComplete( void) = 0;

    };

#else     /* C style interface */

    typedef struct ITPCCVtbl
    {
        BEGIN_INTERFACE

        HRESULT ( STDMETHODCALLTYPE __RPC_FAR *QueryInterface )(
            ITPCC __RPC_FAR * This,
            /* [in] */ REFIID riid,
            /* [iid_is][out] */ void __RPC_FAR *__RPC_FAR *ppvObject);

        ULONG ( STDMETHODCALLTYPE __RPC_FAR *AddRef )(
            ITPCC __RPC_FAR * This);

        ULONG ( STDMETHODCALLTYPE __RPC_FAR *Release )(
            ITPCC __RPC_FAR * This);

        HRESULT ( __stdcall __RPC_FAR *NewOrder )(
            ITPCC __RPC_FAR * This,
            /* [in] */ VARIANT txn_in,
            /* [out] */ VARIANT __RPC_FAR *txn_out);

        HRESULT ( __stdcall __RPC_FAR *Payment )(
            ITPCC __RPC_FAR * This,
            /* [in] */ VARIANT txn_in,
            /* [out] */ VARIANT __RPC_FAR *txn_out);

        HRESULT ( __stdcall __RPC_FAR *Delivery )(
            ITPCC __RPC_FAR * This,
            /* [in] */ VARIANT txn_in,
            /* [out] */ VARIANT __RPC_FAR *txn_out);

        HRESULT ( __stdcall __RPC_FAR *StockLevel )(
            ITPCC __RPC_FAR * This,
            /* [in] */ VARIANT txn_in,
            /* [out] */ VARIANT __RPC_FAR *txn_out);

        HRESULT ( __stdcall __RPC_FAR *OrderStatus )(
            ITPCC __RPC_FAR * This,
            /* [in] */ VARIANT txn_in,
            /* [out] */ VARIANT __RPC_FAR *txn_out);

        HRESULT ( __stdcall __RPC_FAR *CallSetComplete )(
            ITPCC __RPC_FAR * This);

        END_INTERFACE
    } ITPCCVtbl;

    interface ITPCC
    {
        CONST_VTBL struct ITPCCVtbl __RPC_FAR *lpVtbl;
    };
```

```
#ifdef COBJMACROS


#define ITPCC_QueryInterface(This,riid,ppvObject) \
    (This)->lpVtbl -> QueryInterface(This,riid,ppvObject)

#define ITPCC_AddRef(This)    \
    (This)->lpVtbl -> AddRef(This)

#define ITPCC_Release(This)   \
    (This)->lpVtbl -> Release(This)


#define ITPCC_NewOrder(This,txn_in,txn_out)       \
    (This)->lpVtbl -> NewOrder(This,txn_in,txn_out)

#define ITPCC_Payment(This,txn_in,txn_out)        \
    (This)->lpVtbl -> Payment(This,txn_in,txn_out)

#define ITPCC_Delivery(This,txn_in,txn_out)       \
    (This)->lpVtbl -> Delivery(This,txn_in,txn_out)

#define ITPCC_StockLevel(This,txn_in,txn_out)     \
    (This)->lpVtbl -> StockLevel(This,txn_in,txn_out)

#define ITPCC_OrderStatus(This,txn_in,txn_out)    \
    (This)->lpVtbl -> OrderStatus(This,txn_in,txn_out)

#define ITPCC_CallSetComplete(This)     \
    (This)->lpVtbl -> CallSetComplete(This)

#endif /* COBJMACROS */


#endif    /* C style interface */



HRESULT __stdcall ITPCC_NewOrder_Proxy(
    ITPCC __RPC_FAR * This,
    /* [in] */ VARIANT txn_in,
    /* [out] */ VARIANT __RPC_FAR *txn_out);


void __RPC_STUB ITPCC_NewOrder_Stub(
    IRpcStubBuffer *This,
    IRpcChannelBuffer *_pRpcChannelBuffer,
    PRPC_MESSAGE _pRpcMessage,
    DWORD *_pdwStubPhase);


HRESULT __stdcall ITPCC_Payment_Proxy(
    ITPCC __RPC_FAR * This,
    /* [in] */ VARIANT txn_in,
    /* [out] */ VARIANT __RPC_FAR *txn_out);


void __RPC_STUB ITPCC_Payment_Stub(
    IRpcStubBuffer *This,
    IRpcChannelBuffer *_pRpcChannelBuffer,
    PRPC_MESSAGE _pRpcMessage,
```


Copyright Dell

```
    DWORD *_pdwStubPhase);


HRESULT __stdcall ITPCC_Delivery_Proxy(
    ITPCC __RPC_FAR * This,
    /* [in] */ VARIANT txn_in,
    /* [out] */ VARIANT __RPC_FAR *txn_out);


void __RPC_STUB ITPCC_Delivery_Stub(
    IRpcStubBuffer *This,
    IRpcChannelBuffer *_pRpcChannelBuffer,
    PRPC_MESSAGE _pRpcMessage,
    DWORD *_pdwStubPhase);


HRESULT __stdcall ITPCC_StockLevel_Proxy(
    ITPCC __RPC_FAR * This,
    /* [in] */ VARIANT txn_in,
    /* [out] */ VARIANT __RPC_FAR *txn_out);


void __RPC_STUB ITPCC_StockLevel_Stub(
    IRpcStubBuffer *This,
    IRpcChannelBuffer *_pRpcChannelBuffer,
    PRPC_MESSAGE _pRpcMessage,
    DWORD *_pdwStubPhase);


HRESULT __stdcall ITPCC_OrderStatus_Proxy(
    ITPCC __RPC_FAR * This,
    /* [in] */ VARIANT txn_in,
    /* [out] */ VARIANT __RPC_FAR *txn_out);


void __RPC_STUB ITPCC_OrderStatus_Stub(
    IRpcStubBuffer *This,
    IRpcChannelBuffer *_pRpcChannelBuffer,
    PRPC_MESSAGE _pRpcMessage,
    DWORD *_pdwStubPhase);


HRESULT __stdcall ITPCC_CallSetComplete_Proxy(
    ITPCC __RPC_FAR * This);


void __RPC_STUB ITPCC_CallSetComplete_Stub(
    IRpcStubBuffer *This,
    IRpcChannelBuffer *_pRpcChannelBuffer,
    PRPC_MESSAGE _pRpcMessage,
    DWORD *_pdwStubPhase);


#endif    /* __ITPCC_INTERFACE_DEFINED__ */


/* Additional Prototypes for ALL interfaces */

unsigned long             __RPC_USER  VARIANT_UserSize(     unsigned long __RPC_FAR *,
unsigned long            , VARIANT __RPC_FAR * );
unsigned char __RPC_FAR * __RPC_USER  VARIANT_UserMarshal(  unsigned long __RPC_FAR *,
unsigned char __RPC_FAR *, VARIANT __RPC_FAR * );
unsigned char __RPC_FAR * __RPC_USER  VARIANT_UserUnmarshal(unsigned long __RPC_FAR *,
unsigned char __RPC_FAR *, VARIANT __RPC_FAR * );
void                      __RPC_USER  VARIANT_UserFree(     unsigned long __RPC_FAR *,
VARIANT __RPC_FAR * );

/* end of Additional Prototypes */

#ifdef __cplusplus
}
#endif

#endif
```

tpcc_com_all/src/tpcc_com_sl.rgs

```
HKCR
{
          TPCC.StockLevel.1 = s 'StockLevel Class'
          {
                    CLSID = s '{2668369E-A50D-11D2-BA4E-00C04FBFE08B}'
          }
          TPCC.StockLevel = s 'StockLevel Class'
          {
                    CurVer = s 'TPCC.StockLevel.1'
          }
          NoRemove CLSID
          {
                    ForceRemove {2668369E-A50D-11D2-BA4E-00C04FBFE08B} = s 'StockLevel
Class'
                    {
                              ProgID = s 'TPCC.StockLevel.1'
                              VersionIndependentProgID = s 'TPCC.StockLevel'
                              InprocServer32 = s '%MODULE%'
                              {
                                        val ThreadingModel = s 'Both'
                              }
                    }
          }
}
```

tpcc_com_ps/src/dlldata.c

```
/*********************************************************
   DllData file -- generated by MIDL compiler

        DO NOT ALTER THIS FILE

   This file is regenerated by MIDL on every IDL file compile.

   To completely reconstruct this file, delete it and rerun MIDL
   on all the IDL files in this DLL, specifying this file for the
```

```
   /dlldata command line option

*******************************************************/


#include <rpcproxy.h>

#ifdef __cplusplus
extern "C"   {
#endif

EXTERN_PROXY_FILE( tpcc_com_ps )


PROXYFILE_LIST_START
/* Start of list */
  REFERENCE_PROXY_FILE( tpcc_com_ps ),
/* End of list */
PROXYFILE_LIST_END


DLLDATA_ROUTINES( aProxyFileList, GET_DLL_CLSID )

#ifdef __cplusplus
}  /*extern "C" */
#endif

/* end of generated dlldata file */
```

tpcc_com_ps/src/tpcc_com_ps.def

```
LIBRARY      "tpcc_com_ps"

DESCRIPTION  'Proxy/Stub DLL'

EXPORTS
          DllGetClassObject       @1    PRIVATE
          DllCanUnloadNow         @2    PRIVATE
          GetProxyDllInfo         @3    PRIVATE
          DllRegisterServer             @4        PRIVATE
          DllUnregisterServer           @5        PRIVATE
```

tpcc_com_ps/src/tpcc_com_ps.h

```
#pragma warning( disable: 4049 )  /* more than 64k source lines */

/* this ALWAYS GENERATED file contains the definitions for the interfaces */


 /* File created by MIDL compiler version 5.03.0280 */
/* at Sat Apr 08 16:40:10 2000
 */
/* Compiler settings for .\src\tpcc_com_ps.idl:
    Oicf (OptLev=i2), W1, Zp8, env=Win32 (32b run), ms_ext, c_ext
    error checks: allocation ref bounds_check enum stub_data
    VC __declspec() decoration level:
         __declspec(uuid()), __declspec(selectany), __declspec(novtable)
         DECLSPEC_UUID(), MIDL_INTERFACE()
*/
//@@MIDL_FILE_HEADING(  )


/* verify that the <rpcndr.h> version is high enough to compile this file*/
#ifndef __REQUIRED_RPCNDR_H_VERSION__
#define __REQUIRED_RPCNDR_H_VERSION__ 440
#endif

#include "rpc.h"
#include "rpcndr.h"

#ifndef __RPCNDR_H_VERSION__
#error this stub requires an updated version of <rpcndr.h>
#endif // __RPCNDR_H_VERSION__

#ifndef COM_NO_WINDOWS_H
#include "windows.h"
#include "ole2.h"
#endif /*COM_NO_WINDOWS_H*/

#ifndef __tpcc_com_ps_h__
#define __tpcc_com_ps_h__

/* Forward Declarations */

#ifndef __ITPCC_FWD_DEFINED__
#define __ITPCC_FWD_DEFINED__
typedef interface ITPCC ITPCC;
#endif    /* __ITPCC_FWD_DEFINED__ */


/* header files for imported files */
#include "oaidl.h"
#include "ocidl.h"

#ifdef __cplusplus
extern "C"{
#endif

void __RPC_FAR * __RPC_USER MIDL_user_allocate(size_t);
void __RPC_USER MIDL_user_free( void __RPC_FAR * );

/* interface __MIDL_itf_tpcc_com_ps_0000 */
/* [local] */




extern RPC_IF_HANDLE __MIDL_itf_tpcc_com_ps_0000_v0_0_c_ifspec;
extern RPC_IF_HANDLE __MIDL_itf_tpcc_com_ps_0000_v0_0_s_ifspec;

#ifndef __ITPCC_INTERFACE_DEFINED__
#define __ITPCC_INTERFACE_DEFINED__

/* interface ITPCC */
/* [unique][helpstring][uuid][oleautomation][object] */
```


Copyright Dell

```
EXTERN_C const IID IID_ITPCC;

#if defined(__cplusplus) && !defined(CINTERFACE)

    MIDL_INTERFACE("FEEE6AA2-84B1-11d2-BA47-00C04FBFE08B")
    ITPCC : public IUnknown
    {
    public:
        virtual HRESULT __stdcall NewOrder(
            /* [in] */ VARIANT txn_in,
            /* [out] */ VARIANT __RPC_FAR *txn_out) = 0;

        virtual HRESULT __stdcall Payment(
            /* [in] */ VARIANT txn_in,
            /* [out] */ VARIANT __RPC_FAR *txn_out) = 0;

        virtual HRESULT __stdcall Delivery(
            /* [in] */ VARIANT txn_in,
            /* [out] */ VARIANT __RPC_FAR *txn_out) = 0;

        virtual HRESULT __stdcall StockLevel(
            /* [in] */ VARIANT txn_in,
            /* [out] */ VARIANT __RPC_FAR *txn_out) = 0;

        virtual HRESULT __stdcall OrderStatus(
            /* [in] */ VARIANT txn_in,
            /* [out] */ VARIANT __RPC_FAR *txn_out) = 0;

        virtual HRESULT __stdcall CallSetComplete( void) = 0;

    };

#else     /* C style interface */

    typedef struct ITPCCVtbl
    {
        BEGIN_INTERFACE

        HRESULT ( STDMETHODCALLTYPE __RPC_FAR *QueryInterface )(
            ITPCC __RPC_FAR * This,
            /* [in] */ REFIID riid,
            /* [iid_is][out] */ void __RPC_FAR *__RPC_FAR *ppvObject);

        ULONG ( STDMETHODCALLTYPE __RPC_FAR *AddRef )(
            ITPCC __RPC_FAR * This);

        ULONG ( STDMETHODCALLTYPE __RPC_FAR *Release )(
            ITPCC __RPC_FAR * This);

        HRESULT ( __stdcall __RPC_FAR *NewOrder )(
            ITPCC __RPC_FAR * This,
            /* [in] */ VARIANT txn_in,
            /* [out] */ VARIANT __RPC_FAR *txn_out);

        HRESULT ( __stdcall __RPC_FAR *Payment )(
            ITPCC __RPC_FAR * This,
            /* [in] */ VARIANT txn_in,
            /* [out] */ VARIANT __RPC_FAR *txn_out);

        HRESULT ( __stdcall __RPC_FAR *Delivery )(
            ITPCC __RPC_FAR * This,
            /* [in] */ VARIANT txn_in,
            /* [out] */ VARIANT __RPC_FAR *txn_out);

        HRESULT ( __stdcall __RPC_FAR *StockLevel )(
            ITPCC __RPC_FAR * This,
            /* [in] */ VARIANT txn_in,
            /* [out] */ VARIANT __RPC_FAR *txn_out);

        HRESULT ( __stdcall __RPC_FAR *OrderStatus )(
            ITPCC __RPC_FAR * This,
            /* [in] */ VARIANT txn_in,
            /* [out] */ VARIANT __RPC_FAR *txn_out);

        HRESULT ( __stdcall __RPC_FAR *CallSetComplete )(
            ITPCC __RPC_FAR * This);

        END_INTERFACE
    } ITPCCVtbl;

    interface ITPCC
    {
        CONST_VTBL struct ITPCCVtbl __RPC_FAR *lpVtbl;
    };


#ifdef COBJMACROS


#define ITPCC_QueryInterface(This,riid,ppvObject) \
    (This)->lpVtbl -> QueryInterface(This,riid,ppvObject)

#define ITPCC_AddRef(This)    \
    (This)->lpVtbl -> AddRef(This)

#define ITPCC_Release(This)   \
    (This)->lpVtbl -> Release(This)


#define ITPCC_NewOrder(This,txn_in,txn_out)       \
    (This)->lpVtbl -> NewOrder(This,txn_in,txn_out)

#define ITPCC_Payment(This,txn_in,txn_out)        \
    (This)->lpVtbl -> Payment(This,txn_in,txn_out)

#define ITPCC_Delivery(This,txn_in,txn_out)       \
    (This)->lpVtbl -> Delivery(This,txn_in,txn_out)

#define ITPCC_StockLevel(This,txn_in,txn_out)     \
    (This)->lpVtbl -> StockLevel(This,txn_in,txn_out)

#define ITPCC_OrderStatus(This,txn_in,txn_out)    \
    (This)->lpVtbl -> OrderStatus(This,txn_in,txn_out)

#define ITPCC_CallSetComplete(This)     \
    (This)->lpVtbl -> CallSetComplete(This)

#endif /* COBJMACROS */


#endif    /* C style interface */
```

```
HRESULT __stdcall ITPCC_NewOrder_Proxy(
    ITPCC __RPC_FAR * This,
    /* [in] */ VARIANT txn_in,
    /* [out] */ VARIANT __RPC_FAR *txn_out);


void __RPC_STUB ITPCC_NewOrder_Stub(
    IRpcStubBuffer *This,
    IRpcChannelBuffer *_pRpcChannelBuffer,
    PRPC_MESSAGE _pRpcMessage,
    DWORD *_pdwStubPhase);


HRESULT __stdcall ITPCC_Payment_Proxy(
    ITPCC __RPC_FAR * This,
    /* [in] */ VARIANT txn_in,
    /* [out] */ VARIANT __RPC_FAR *txn_out);


void __RPC_STUB ITPCC_Payment_Stub(
    IRpcStubBuffer *This,
    IRpcChannelBuffer *_pRpcChannelBuffer,
    PRPC_MESSAGE _pRpcMessage,
    DWORD *_pdwStubPhase);


HRESULT __stdcall ITPCC_Delivery_Proxy(
    ITPCC __RPC_FAR * This,
    /* [in] */ VARIANT txn_in,
    /* [out] */ VARIANT __RPC_FAR *txn_out);


void __RPC_STUB ITPCC_Delivery_Stub(
    IRpcStubBuffer *This,
    IRpcChannelBuffer *_pRpcChannelBuffer,
    PRPC_MESSAGE _pRpcMessage,
    DWORD *_pdwStubPhase);


HRESULT __stdcall ITPCC_StockLevel_Proxy(
    ITPCC __RPC_FAR * This,
    /* [in] */ VARIANT txn_in,
    /* [out] */ VARIANT __RPC_FAR *txn_out);


void __RPC_STUB ITPCC_StockLevel_Stub(
    IRpcStubBuffer *This,
    IRpcChannelBuffer *_pRpcChannelBuffer,
    PRPC_MESSAGE _pRpcMessage,
    DWORD *_pdwStubPhase);


HRESULT __stdcall ITPCC_OrderStatus_Proxy(
    ITPCC __RPC_FAR * This,
    /* [in] */ VARIANT txn_in,
    /* [out] */ VARIANT __RPC_FAR *txn_out);


void __RPC_STUB ITPCC_OrderStatus_Stub(
    IRpcStubBuffer *This,
    IRpcChannelBuffer *_pRpcChannelBuffer,
    PRPC_MESSAGE _pRpcMessage,
    DWORD *_pdwStubPhase);


HRESULT __stdcall ITPCC_CallSetComplete_Proxy(
    ITPCC __RPC_FAR * This);


void __RPC_STUB ITPCC_CallSetComplete_Stub(
    IRpcStubBuffer *This,
    IRpcChannelBuffer *_pRpcChannelBuffer,
    PRPC_MESSAGE _pRpcMessage,
    DWORD *_pdwStubPhase);



#endif    /* __ITPCC_INTERFACE_DEFINED__ */


/* Additional Prototypes for ALL interfaces */

unsigned long             __RPC_USER  VARIANT_UserSize(     unsigned long __RPC_FAR *,
unsigned long            , VARIANT __RPC_FAR * );
unsigned char __RPC_FAR * __RPC_USER  VARIANT_UserMarshal(  unsigned long __RPC_FAR *,
unsigned char __RPC_FAR *, VARIANT __RPC_FAR * );
unsigned char __RPC_FAR * __RPC_USER  VARIANT_UserUnmarshal(unsigned long __RPC_FAR *,
unsigned char __RPC_FAR *, VARIANT __RPC_FAR * );
void                      __RPC_USER  VARIANT_UserFree(     unsigned long __RPC_FAR *,
VARIANT __RPC_FAR * );

/* end of Additional Prototypes */

#ifdef __cplusplus
}
#endif

#endif
```

tpcc_com_ps/src/tpcc_com_ps.idl

```
/*      FILE:           ITPCC.IDL
 *                              Microsoft TPC-C Kit Ver. 4.20.000
 *                              Copyright Microsoft, 1999
 *               All Rights Reserved
 *
 *                              not yet audited
 *
 *      PURPOSE:        Defines the interface used by TPCC. This
interface can be implemented by C++ components.
 *
 *  Change history:
 *              4.20.000 - first version
```

```
 */

// Forward declare all types defined
interface ITPCC;
import "oaidl.idl";
import "ocidl.idl";

        [
                object,
                oleautomation,
                uuid(FEEE6AA2-84B1-11d2-BA47-00C04FBFE08B),
                helpstring("ITPCC Interface"),
                pointer_default(unique)
        ]
        interface ITPCC : IUnknown
        {

         HRESULT _stdcall NewOrder
                                        (
                                        [in] VARIANT  txn_in,
                                        [out] VARIANT *txn_out
                                        );

         HRESULT _stdcall Payment
                                        (
                                        [in] VARIANT txn_in,
                                        [out] VARIANT *txn_out
                                        );

         HRESULT _stdcall Delivery
                                        (
                                        [in] VARIANT txn_in,
                                        [out] VARIANT *txn_out
                                        );

         HRESULT _stdcall StockLevel
                                        (
                                        [in] VARIANT txn_in,
                                        [out] VARIANT *txn_out
                                        );

         HRESULT _stdcall OrderStatus
                                        (
                                        [in] VARIANT txn_in,
                                        [out] VARIANT *txn_out
                                        );

         HRESULT _stdcall CallSetComplete
                                        (
                                        );

     };  // interface ITPCC
```

tpcc_com_ps/src/tpcc_com_ps_i.c

```
#pragma warning( disable: 4049 )  /* more than 64k source lines */

/* this ALWAYS GENERATED file contains the IIDs and CLSIDs */

/* link this file in with the server and any clients */


 /* File created by MIDL compiler version 5.03.0280 */
/* at Sat Apr 08 16:40:10 2000
 */
/* Compiler settings for .\src\tpcc_com_ps.idl:
    Oicf (OptLev=i2), W1, Zp8, env=Win32 (32b run), ms_ext, c_ext
    error checks: allocation ref bounds_check enum stub_data
    VC __declspec() decoration level:
         __declspec(uuid()), __declspec(selectany), __declspec(novtable)
         DECLSPEC_UUID(), MIDL_INTERFACE()
*/
//@@MIDL_FILE_HEADING(  )

#if !defined(_M_IA64) && !defined(_M_AXP64)

#ifdef __cplusplus
extern "C"{
#endif


#include <rpc.h>
#include <rpcndr.h>

#ifdef _MIDL_USE_GUIDDEF_

#ifndef INITGUID
#define INITGUID
#include <guiddef.h>
#undef INITGUID
#else
#include <guiddef.h>
#endif

#define MIDL_DEFINE_GUID(type,name,l,w1,w2,b1,b2,b3,b4,b5,b6,b7,b8) \
        DEFINE_GUID(name,l,w1,w2,b1,b2,b3,b4,b5,b6,b7,b8)

#else // !_MIDL_USE_GUIDDEF_
```

```
#ifndef __IID_DEFINED__
#define __IID_DEFINED__

typedef struct _IID
{
    unsigned long x;
    unsigned short s1;
    unsigned short s2;
    unsigned char  c[8];
} IID;

#endif // __IID_DEFINED__

#ifndef CLSID_DEFINED
#define CLSID_DEFINED
typedef IID CLSID;
#endif // CLSID_DEFINED

#define MIDL_DEFINE_GUID(type,name,l,w1,w2,b1,b2,b3,b4,b5,b6,b7,b8) \
        const type name = {l,w1,w2,{b1,b2,b3,b4,b5,b6,b7,b8}}

#endif !_MIDL_USE_GUIDDEF_

MIDL_DEFINE_GUID(IID,
IID_ITPCC,0xFEEE6AA2,0x84B1,0x11d2,0xBA,0x47,0x00,0xC0,0x4F,0xBF,0xE0,0x8B);

#undef MIDL_DEFINE_GUID

#ifdef __cplusplus
}
#endif



#endif /* !defined(_M_IA64) && !defined(_M_AXP64)*/


#pragma warning( disable: 4049 )  /* more than 64k source lines */

/* this ALWAYS GENERATED file contains the IIDs and CLSIDs */

/* link this file in with the server and any clients */


 /* File created by MIDL compiler version 5.03.0280 */
/* at Sat Apr 08 16:40:10 2000
 */
/* Compiler settings for .\src\tpcc_com_ps.idl:
    Oicf (OptLev=i2), W1, Zp8, env=Win64 (32b run,appending), ms_ext, c_ext, robust
    error checks: allocation ref bounds_check enum stub_data
    VC __declspec() decoration level:
         __declspec(uuid()), __declspec(selectany), __declspec(novtable)
         DECLSPEC_UUID(), MIDL_INTERFACE()
*/
//@@MIDL_FILE_HEADING(  )

#if defined(_M_IA64) || defined(_M_AXP64)

#ifdef __cplusplus
extern "C"{
#endif
```

```
#include <rpc.h>
#include <rpcndr.h>

#ifdef _MIDL_USE_GUIDDEF_

#ifndef INITGUID
#define INITGUID
#include <guiddef.h>
#undef INITGUID
#else
#include <guiddef.h>
#endif

#define MIDL_DEFINE_GUID(type,name,l,w1,w2,b1,b2,b3,b4,b5,b6,b7,b8) \
        DEFINE_GUID(name,l,w1,w2,b1,b2,b3,b4,b5,b6,b7,b8)

#else // !_MIDL_USE_GUIDDEF_

#ifndef __IID_DEFINED__
#define __IID_DEFINED__

typedef struct _IID
{
    unsigned long x;
    unsigned short s1;
    unsigned short s2;
    unsigned char  c[8];
} IID;

#endif // __IID_DEFINED__

#ifndef CLSID_DEFINED
#define CLSID_DEFINED
typedef IID CLSID;
#endif // CLSID_DEFINED

#define MIDL_DEFINE_GUID(type,name,l,w1,w2,b1,b2,b3,b4,b5,b6,b7,b8) \
        const type name = {l,w1,w2,{b1,b2,b3,b4,b5,b6,b7,b8}}

#endif !_MIDL_USE_GUIDDEF_

MIDL_DEFINE_GUID(IID,
IID_ITPCC,0xFEEE6AA2,0x84B1,0x11d2,0xBA,0x47,0x00,0xC0,0x4F,0xBF,0xE0,0x8B);

#undef MIDL_DEFINE_GUID

#ifdef __cplusplus
}
#endif



#endif /* defined(_M_IA64) || defined(_M_AXP64)*/
```

tpcc_com_ps/src/tpcc_com_ps_p.c

Copyright Dell

```
#pragma warning( disable: 4049 )  /* more than 64k source lines */

/* this ALWAYS GENERATED file contains the proxy stub code */


 /* File created by MIDL compiler version 5.03.0280 */
/* at Sat Apr 08 16:40:10 2000
 */
/* Compiler settings for .\src\tpcc_com_ps.idl:
    Oicf (OptLev=i2), W1, Zp8, env=Win32 (32b run), ms_ext, c_ext
    error checks: allocation ref bounds_check enum stub_data
    VC __declspec() decoration level:
         __declspec(uuid()), __declspec(selectany), __declspec(novtable)
         DECLSPEC_UUID(), MIDL_INTERFACE()
*/
//@@MIDL_FILE_HEADING(  )

#if !defined(_M_IA64) && !defined(_M_AXP64)
#define USE_STUBLESS_PROXY


/* verify that the <rpcproxy.h> version is high enough to compile this file*/
#ifndef __REDQ_RPCPROXY_H_VERSION__
#define __REQUIRED_RPCPROXY_H_VERSION__ 440
#endif


#include "rpcproxy.h"
#ifndef __RPCPROXY_H_VERSION__
#error this stub requires an updated version of <rpcproxy.h>
#endif // __RPCPROXY_H_VERSION__


#include "tpcc_com_ps.h"

#define TYPE_FORMAT_STRING_SIZE   997
#define PROC_FORMAT_STRING_SIZE   193
#define TRANSMIT_AS_TABLE_SIZE    0
#define WIRE_MARSHAL_TABLE_SIZE   1

typedef struct _MIDL_TYPE_FORMAT_STRING
    {
    short          Pad;
    unsigned char  Format[ TYPE_FORMAT_STRING_SIZE ];
    } MIDL_TYPE_FORMAT_STRING;

typedef struct _MIDL_PROC_FORMAT_STRING
    {
    short          Pad;
    unsigned char  Format[ PROC_FORMAT_STRING_SIZE ];
    } MIDL_PROC_FORMAT_STRING;


extern const MIDL_TYPE_FORMAT_STRING __MIDL_TypeFormatString;
extern const MIDL_PROC_FORMAT_STRING __MIDL_ProcFormatString;


/* Standard interface: __MIDL_itf_tpcc_com_ps_0000, ver. 0.0,
   GUID={0x00000000,0x0000,0x0000,{0x00,0x00,0x00,0x00,0x00,0x00,0x00,0x00}} */

/* Object interface: IUnknown, ver. 0.0,
   GUID={0x00000000,0x0000,0x0000,{0xC0,0x00,0x00,0x00,0x00,0x00,0x00,0x46}} */


/* Object interface: ITPCC, ver. 0.0,
   GUID={0xFEEE6AA2,0x84B1,0x11d2,{0xBA,0x47,0x00,0xC0,0x4F,0xBF,0xE0,0x8B}} */


extern const MIDL_STUB_DESC Object_StubDesc;


extern const MIDL_SERVER_INFO ITPCC_ServerInfo;

#pragma code_seg(".orpc")
static const unsigned short ITPCC_FormatStringOffsetTable[] =
    {
    0,
    34,
    68,
    102,
    136,
    170
    };

static const MIDL_SERVER_INFO ITPCC_ServerInfo =
    {
    &Object_StubDesc,
    0,
    __MIDL_ProcFormatString.Format,
    &ITPCC_FormatStringOffsetTable[-3],
    0,
    0,
    0,
    0
    };

static const MIDL_STUBLESS_PROXY_INFO ITPCC_ProxyInfo =
    {
    &Object_StubDesc,
    __MIDL_ProcFormatString.Format,
    &ITPCC_FormatStringOffsetTable[-3],
    0,
    0,
    0
    };

CINTERFACE_PROXY_VTABLE(9) _ITPCCProxyVtbl =
{
    &ITPCC_ProxyInfo,
    &IID_ITPCC,
    IUnknown_QueryInterface_Proxy,
    IUnknown_AddRef_Proxy,
    IUnknown_Release_Proxy ,
    (void *)-1 /* ITPCC::NewOrder */ ,
    (void *)-1 /* ITPCC::Payment */ ,
    (void *)-1 /* ITPCC::Delivery */ ,
    (void *)-1 /* ITPCC::StockLevel */ ,
    (void *)-1 /* ITPCC::OrderStatus */ ,
    (void *)-1 /* ITPCC::CallSetComplete */
};

const CInterfaceStubVtbl _ITPCCStubVtbl =
{
```

```
    &IID_ITPCC,
    &ITPCC_ServerInfo,
    9,
    0, /* pure interpreted */
    CStdStubBuffer_METHODS
};

extern const USER_MARSHAL_ROUTINE_QUADRUPLE UserMarshalRoutines[ WIRE_MARSHAL_TABLE_SIZE
];

static const MIDL_STUB_DESC Object_StubDesc =
    {
    0,
    NdrOleAllocate,
    NdrOleFree,
    0,
    0,
    0,
    0,
    0,
    __MIDL_TypeFormatString.Format,
    1, /* -error bounds_check flag */
    0x20000, /* Ndr library version */
    0,
    0x5030118, /* MIDL Version 5.3.280 */
    0,
    UserMarshalRoutines,
    0,  /* notify & notify_flag routine table */
    0x1, /* MIDL flag */
    0,  /* Reserved3 */
    0,  /* Reserved4 */
    0   /* Reserved5 */
    };

#pragma data_seg(".rdata")

static const USER_MARSHAL_ROUTINE_QUADRUPLE UserMarshalRoutines[ WIRE_MARSHAL_TABLE_SIZE
] =
        {

            {
            VARIANT_UserSize
            ,VARIANT_UserMarshal
            ,VARIANT_UserUnmarshal
            ,VARIANT_UserFree
            }

        };


#if !defined(__RPC_WIN32__)
#error  Invalid build platform for this stub.
#endif

#if !(TARGET_IS_NT40_OR_LATER)
#error You need a Windows NT 4.0 or later to run this stub because it uses these
features:
#error   -Oif or -Oicf, [wire_marshal] or [user_marshal] attribute.
#error However, your C/C++ compilation flags indicate you intend to run this app on
earlier systems.
#error This app will die there with the RPC_X_WRONG_STUB_VERSION error.
#endif
```

```
static const MIDL_PROC_FORMAT_STRING __MIDL_ProcFormatString =
    {
        0,
        {

          /* Procedure NewOrder */

                                0x33,               /* FC_AUTO_HANDLE */
                                0x6c,               /* Old Flags:  object, Oi2 */
/*  2 */  NdrFcLong( 0x0 ),   /* 0 */
/*  6 */  NdrFcShort( 0x3 ),  /* 3 */
#ifndef _ALPHA_
#ifndef _PPC_
#if !defined(_MIPS_)
/*  8 */  NdrFcShort( 0x1c ), /* x86 Stack size/offset = 28 */
#else
                                NdrFcShort( 0x20 ), /*  MIPS Stack size/offset = 32 */
#endif
#else
                                NdrFcShort( 0x20 ), /* PPC Stack size/offset = 32 */
#endif
#else
                                NdrFcShort( 0x28 ), /* Alpha Stack size/offset = 40 */
#endif
/* 10 */  NdrFcShort( 0x0 ),  /* 0 */
/* 12 */  NdrFcShort( 0x8 ),  /* 8 */
/* 14 */  0x7,                /* Oi2 Flags:  srv must size, clt must size, has return, */
                                0x3,                /* 3 */

          /* Parameter txn_in */

/* 16 */  NdrFcShort( 0x8b ), /* Flags:  must size, must free, in, by val, */
#ifndef _ALPHA_
#ifndef _PPC_
#if !defined(_MIPS_)
/* 18 */  NdrFcShort( 0x4 ),  /* x86 Stack size/offset = 4 */
#else
                                NdrFcShort( 0x8 ),  /*  MIPS Stack size/offset = 8 */
#endif
#else
                                NdrFcShort( 0x8 ),  /* PPC Stack size/offset = 8 */
#endif
#else
                                NdrFcShort( 0x8 ),  /* Alpha Stack size/offset = 8 */
#endif
/* 20 */  NdrFcShort( 0x3c8 ),          /* Type Offset=968 */

          /* Parameter txn_out */

/* 22 */  NdrFcShort( 0x4113 ),         /* Flags:  must size, must free, out, simple ref,
srv alloc size=16 */
#ifndef _ALPHA_
#ifndef _PPC_
#if !defined(_MIPS_)
/* 24 */  NdrFcShort( 0x14 ), /* x86 Stack size/offset = 20 */
#else
                                NdrFcShort( 0x18 ), /*  MIPS Stack size/offset = 24 */
#endif
#else
                                NdrFcShort( 0x18 ), /* PPC Stack size/offset = 24 */
#endif
#else
```


Copyright Dell

```
                                NdrFcShort( 0x18 ), /* Alpha Stack size/offset = 24 */
#endif
/* 26 */  NdrFcShort( 0x3da ),          /* Type Offset=986 */

          /* Return value */

/* 28 */  NdrFcShort( 0x70 ), /* Flags:  out, return, base type, */
#ifndef _ALPHA_
#ifndef _PPC_
#if !defined(_MIPS_)
/* 30 */  NdrFcShort( 0x18 ), /* x86 Stack size/offset = 24 */
#else
                                NdrFcShort( 0x1c ), /*  MIPS Stack size/offset = 28 */
#endif
#else
                                NdrFcShort( 0x1c ), /* PPC Stack size/offset = 28 */
#endif
#else
                                NdrFcShort( 0x20 ), /* Alpha Stack size/offset = 32 */
#endif
/* 32 */  0x8,                  /* FC_LONG */
                                0x0,                /* 0 */

          /* Procedure Payment */

/* 34 */  0x33,                 /* FC_AUTO_HANDLE */
                                0x6c,               /* Old Flags:  object, Oi2 */
/* 36 */  NdrFcLong( 0x0 ),     /* 0 */
/* 40 */  NdrFcShort( 0x4 ),    /* 4 */
#ifndef _ALPHA_
#ifndef _PPC_
#if !defined(_MIPS_)
/* 42 */  NdrFcShort( 0x1c ), /* x86 Stack size/offset = 28 */
#else
                                NdrFcShort( 0x20 ), /*  MIPS Stack size/offset = 32 */
#endif
#else
                                NdrFcShort( 0x20 ), /* PPC Stack size/offset = 32 */
#endif
#else
                                NdrFcShort( 0x28 ), /* Alpha Stack size/offset = 40 */
#endif
/* 44 */  NdrFcShort( 0x0 ),    /* 0 */
/* 46 */  NdrFcShort( 0x8 ),    /* 8 */
/* 48 */  0x7,                  /* Oi2 Flags:  srv must size, clt must size, has return, */
                                0x3,                /* 3 */

          /* Parameter txn_in */

/* 50 */  NdrFcShort( 0x8b ), /* Flags:  must size, must free, in, by val, */
#ifndef _ALPHA_
#ifndef _PPC_
#if !defined(_MIPS_)
/* 52 */  NdrFcShort( 0x4 ),    /* x86 Stack size/offset = 4 */
#else
                                NdrFcShort( 0x8 ),    /*  MIPS Stack size/offset = 8 */
#endif
#else
                                NdrFcShort( 0x8 ),    /* PPC Stack size/offset = 8 */
#endif
#else
                                NdrFcShort( 0x8 ),    /* Alpha Stack size/offset = 8 */
#endif
/* 54 */  NdrFcShort( 0x3c8 ),          /* Type Offset=968 */

          /* Parameter txn_out */

/* 56 */  NdrFcShort( 0x4113 ),         /* Flags:  must size, must free, out, simple ref,
srv alloc size=16 */
#ifndef _ALPHA_
#ifndef _PPC_
#if !defined(_MIPS_)
/* 58 */  NdrFcShort( 0x14 ), /* x86 Stack size/offset = 20 */
#else
                                NdrFcShort( 0x18 ), /*  MIPS Stack size/offset = 24 */
#endif
#else
                                NdrFcShort( 0x18 ), /* PPC Stack size/offset = 24 */
#endif
#else
                                NdrFcShort( 0x18 ), /* Alpha Stack size/offset = 24 */
#endif
/* 60 */  NdrFcShort( 0x3da ),          /* Type Offset=986 */

          /* Return value */

/* 62 */  NdrFcShort( 0x70 ), /* Flags:  out, return, base type, */
#ifndef _ALPHA_
#ifndef _PPC_
#if !defined(_MIPS_)
/* 64 */  NdrFcShort( 0x18 ), /* x86 Stack size/offset = 24 */
#else
                                NdrFcShort( 0x1c ), /*  MIPS Stack size/offset = 28 */
#endif
#else
                                NdrFcShort( 0x1c ), /* PPC Stack size/offset = 28 */
#endif
#else
                                NdrFcShort( 0x20 ), /* Alpha Stack size/offset = 32 */
#endif
/* 66 */  0x8,                  /* FC_LONG */
                                0x0,                /* 0 */

          /* Procedure Delivery */

/* 68 */  0x33,                 /* FC_AUTO_HANDLE */
                                0x6c,               /* Old Flags:  object, Oi2 */
/* 70 */  NdrFcLong( 0x0 ),     /* 0 */
/* 74 */  NdrFcShort( 0x5 ),    /* 5 */
#ifndef _ALPHA_
#ifndef _PPC_
#if !defined(_MIPS_)
/* 76 */  NdrFcShort( 0x1c ), /* x86 Stack size/offset = 28 */
#else
                                NdrFcShort( 0x20 ), /*  MIPS Stack size/offset = 32 */
#endif
#else
                                NdrFcShort( 0x20 ), /* PPC Stack size/offset = 32 */
#endif
#else
                                NdrFcShort( 0x28 ), /* Alpha Stack size/offset = 40 */
#endif
/* 78 */  NdrFcShort( 0x0 ),    /* 0 */
/* 80 */  NdrFcShort( 0x8 ),    /* 8 */
/* 82 */  0x7,                  /* Oi2 Flags:  srv must size, clt must size, has return, */
                                0x3,                /* 3 */
```


Copyright Dell

```
          /* Parameter txn_in */

/* 84 */  NdrFcShort( 0x8b ), /* Flags:  must size, must free, in, by val, */
#ifndef _ALPHA_
#ifndef _PPC_
#if !defined(_MIPS_)
/* 86 */  NdrFcShort( 0x4 ),  /* x86 Stack size/offset = 4 */
#else
                              NdrFcShort( 0x8 ),  /*  MIPS Stack size/offset = 8 */
#endif
#else
                              NdrFcShort( 0x8 ),  /* PPC Stack size/offset = 8 */
#endif
#else
                              NdrFcShort( 0x8 ),  /* Alpha Stack size/offset = 8 */
#endif
/* 88 */  NdrFcShort( 0x3c8 ),          /* Type Offset=968 */

          /* Parameter txn_out */

/* 90 */  NdrFcShort( 0x4113 ),         /* Flags:  must size, must free, out, simple ref,
srv alloc size=16 */
#ifndef _ALPHA_
#ifndef _PPC_
#if !defined(_MIPS_)
/* 92 */  NdrFcShort( 0x14 ), /* x86 Stack size/offset = 20 */
#else
                              NdrFcShort( 0x18 ), /*  MIPS Stack size/offset = 24 */
#endif
#else
                              NdrFcShort( 0x18 ), /* PPC Stack size/offset = 24 */
#endif
#else
                              NdrFcShort( 0x18 ), /* Alpha Stack size/offset = 24 */
#endif
/* 94 */  NdrFcShort( 0x3da ),          /* Type Offset=986 */

          /* Return value */

/* 96 */  NdrFcShort( 0x70 ), /* Flags:  out, return, base type, */
#ifndef _ALPHA_
#ifndef _PPC_
#if !defined(_MIPS_)
/* 98 */  NdrFcShort( 0x18 ), /* x86 Stack size/offset = 24 */
#else
                              NdrFcShort( 0x1c ), /*  MIPS Stack size/offset = 28 */
#endif
#else
                              NdrFcShort( 0x1c ), /* PPC Stack size/offset = 28 */
#endif
#else
                              NdrFcShort( 0x20 ), /* Alpha Stack size/offset = 32 */
#endif
/* 100 */ 0x8,                /* FC_LONG */
                              0x0,                /* 0 */

          /* Procedure StockLevel */

/* 102 */ 0x33,               /* FC_AUTO_HANDLE */
                              0x6c,               /* Old Flags:  object, Oi2 */
/* 104 */ NdrFcLong( 0x0 ),   /* 0 */
/* 108 */ NdrFcShort( 0x6 ),  /* 6 */
#ifndef _ALPHA_
#ifndef _PPC_
#if !defined(_MIPS_)
/* 110 */ NdrFcShort( 0x1c ), /* x86 Stack size/offset = 28 */
#else
                              NdrFcShort( 0x20 ), /*  MIPS Stack size/offset = 32 */
#endif
#else
                              NdrFcShort( 0x20 ), /* PPC Stack size/offset = 32 */
#endif
#else
                              NdrFcShort( 0x28 ), /* Alpha Stack size/offset = 40 */
#endif
/* 112 */ NdrFcShort( 0x0 ),  /* 0 */
/* 114 */ NdrFcShort( 0x8 ),  /* 8 */
/* 116 */ 0x7,                /* Oi2 Flags:  srv must size, clt must size, has return, */
                              0x3,                /* 3 */

          /* Parameter txn_in */

/* 118 */ NdrFcShort( 0x8b ), /* Flags:  must size, must free, in, by val, */
#ifndef _ALPHA_
#ifndef _PPC_
#if !defined(_MIPS_)
/* 120 */ NdrFcShort( 0x4 ),  /* x86 Stack size/offset = 4 */
#else
                              NdrFcShort( 0x8 ),  /*  MIPS Stack size/offset = 8 */
#endif
#else
                              NdrFcShort( 0x8 ),  /* PPC Stack size/offset = 8 */
#endif
#else
                              NdrFcShort( 0x8 ),  /* Alpha Stack size/offset = 8 */
#endif
/* 122 */ NdrFcShort( 0x3c8 ),          /* Type Offset=968 */

          /* Parameter txn_out */

/* 124 */ NdrFcShort( 0x4113 ),         /* Flags:  must size, must free, out, simple ref,
srv alloc size=16 */
#ifndef _ALPHA_
#ifndef _PPC_
#if !defined(_MIPS_)
/* 126 */ NdrFcShort( 0x14 ), /* x86 Stack size/offset = 20 */
#else
                              NdrFcShort( 0x18 ), /*  MIPS Stack size/offset = 24 */
#endif
#else
                              NdrFcShort( 0x18 ), /* PPC Stack size/offset = 24 */
#endif
#else
                              NdrFcShort( 0x18 ), /* Alpha Stack size/offset = 24 */
#endif
/* 128 */ NdrFcShort( 0x3da ),          /* Type Offset=986 */

          /* Return value */

/* 130 */ NdrFcShort( 0x70 ), /* Flags:  out, return, base type, */
#ifndef _ALPHA_
#ifndef _PPC_
#if !defined(_MIPS_)
/* 132 */ NdrFcShort( 0x18 ), /* x86 Stack size/offset = 24 */
#else
```


Copyright Dell

```
                                NdrFcShort( 0x1c ), /*  MIPS Stack size/offset = 28 */
#endif
#else
                                NdrFcShort( 0x1c ), /* PPC Stack size/offset = 28 */
#endif
#else
                                NdrFcShort( 0x20 ), /* Alpha Stack size/offset = 32 */
#endif
/* 134 */ 0x8,                  /* FC_LONG */
                                0x0,                /* 0 */

          /* Procedure OrderStatus */

/* 136 */ 0x33,                 /* FC_AUTO_HANDLE */
                                0x6c,               /* Old Flags:  object, Oi2 */
/* 138 */ NdrFcLong( 0x0 ),     /* 0 */
/* 142 */ NdrFcShort( 0x7 ),    /* 7 */
#ifndef _ALPHA_
#ifndef _PPC_
#if !defined(_MIPS_)
/* 144 */ NdrFcShort( 0x1c ), /* x86 Stack size/offset = 28 */
#else
                                NdrFcShort( 0x20 ), /*  MIPS Stack size/offset = 32 */
#endif
#else
                                NdrFcShort( 0x20 ), /* PPC Stack size/offset = 32 */
#endif
#else
                                NdrFcShort( 0x28 ), /* Alpha Stack size/offset = 40 */
#endif
/* 146 */ NdrFcShort( 0x0 ),    /* 0 */
/* 148 */ NdrFcShort( 0x8 ),    /* 8 */
/* 150 */ 0x7,                  /* Oi2 Flags:  srv must size, clt must size, has return, */
                                0x3,                /* 3 */

          /* Parameter txn_in */

/* 152 */ NdrFcShort( 0x8b ), /* Flags:  must size, must free, in, by val, */
#ifndef _ALPHA_
#ifndef _PPC_
#if !defined(_MIPS_)
/* 154 */ NdrFcShort( 0x4 ),    /* x86 Stack size/offset = 4 */
#else
                                NdrFcShort( 0x8 ),  /*  MIPS Stack size/offset = 8 */
#endif
#else
                                NdrFcShort( 0x8 ),  /* PPC Stack size/offset = 8 */
#endif
#else
                                NdrFcShort( 0x8 ),  /* Alpha Stack size/offset = 8 */
#endif
/* 156 */ NdrFcShort( 0x3c8 ),          /* Type Offset=968 */

          /* Parameter txn_out */

/* 158 */ NdrFcShort( 0x4113 ),         /* Flags:  must size, must free, out, simple ref,
srv alloc size=16 */
#ifndef _ALPHA_
#ifndef _PPC_
#if !defined(_MIPS_)
/* 160 */ NdrFcShort( 0x14 ), /* x86 Stack size/offset = 20 */
#else
                                NdrFcShort( 0x18 ), /*  MIPS Stack size/offset = 24 */
#endif
#else
                                NdrFcShort( 0x18 ), /* PPC Stack size/offset = 24 */
#endif
#else
                                NdrFcShort( 0x18 ), /* Alpha Stack size/offset = 24 */
#endif
/* 162 */ NdrFcShort( 0x3da ),          /* Type Offset=986 */

          /* Return value */

/* 164 */ NdrFcShort( 0x70 ), /* Flags:  out, return, base type, */
#ifndef _ALPHA_
#ifndef _PPC_
#if !defined(_MIPS_)
/* 166 */ NdrFcShort( 0x18 ), /* x86 Stack size/offset = 24 */
#else
                                NdrFcShort( 0x1c ), /*  MIPS Stack size/offset = 28 */
#endif
#else
                                NdrFcShort( 0x1c ), /* PPC Stack size/offset = 28 */
#endif
#else
                                NdrFcShort( 0x20 ), /* Alpha Stack size/offset = 32 */
#endif
/* 168 */ 0x8,                  /* FC_LONG */
                                0x0,                /* 0 */

          /* Procedure CallSetComplete */

/* 170 */ 0x33,                 /* FC_AUTO_HANDLE */
                                0x6c,               /* Old Flags:  object, Oi2 */
/* 172 */ NdrFcLong( 0x0 ),     /* 0 */
/* 176 */ NdrFcShort( 0x8 ),    /* 8 */
#ifndef _ALPHA_
/* 178 */ NdrFcShort( 0x8 ),    /* x86, MIPS, PPC Stack size/offset = 8 */
#else
                                NdrFcShort( 0x10 ), /* Alpha Stack size/offset = 16 */
#endif
/* 180 */ NdrFcShort( 0x0 ),    /* 0 */
/* 182 */ NdrFcShort( 0x8 ),    /* 8 */
/* 184 */ 0x4,                  /* Oi2 Flags:  has return, */
                                0x1,                /* 1 */

          /* Return value */

/* 186 */ NdrFcShort( 0x70 ), /* Flags:  out, return, base type, */
#ifndef _ALPHA_
/* 188 */ NdrFcShort( 0x4 ),    /* x86, MIPS, PPC Stack size/offset = 4 */
#else
                                NdrFcShort( 0x8 ),  /* Alpha Stack size/offset = 8 */
#endif
/* 190 */ 0x8,                  /* FC_LONG */
                                0x0,                /* 0 */

                                0x0
        }
    };

static const MIDL_TYPE_FORMAT_STRING __MIDL_TypeFormatString =
    {
        0,
        {
```

```
                                NdrFcShort( 0x0 ),  /* 0 */
/*  2 */
                                0x12, 0x0,          /* FC_UP */
/*  4 */  NdrFcShort( 0x3b0 ),          /* Offset= 944 (948) */
/*  6 */
                                0x2b,               /* FC_NON_ENCAPSULATED_UNION */
                                0x9,                /* FC_ULONG */
/*  8 */  0x7,                  /* Corr desc: FC_USHORT */
                                0x0,                /*  */
/* 10 */  NdrFcShort( 0xfff8 ),         /* -8 */
/* 12 */  NdrFcShort( 0x2 ),  /* Offset= 2 (14) */
/* 14 */  NdrFcShort( 0x10 ), /* 16 */
/* 16 */  NdrFcShort( 0x2b ), /* 43 */
/* 18 */  NdrFcLong( 0x3 ),   /* 3 */
/* 22 */  NdrFcShort( 0x8008 ),         /* Simple arm type: FC_LONG */
/* 24 */  NdrFcLong( 0x11 ),  /* 17 */
/* 28 */  NdrFcShort( 0x8001 ),         /* Simple arm type: FC_BYTE */
/* 30 */  NdrFcLong( 0x2 ),   /* 2 */
/* 34 */  NdrFcShort( 0x8006 ),         /* Simple arm type: FC_SHORT */
/* 36 */  NdrFcLong( 0x4 ),   /* 4 */
/* 40 */  NdrFcShort( 0x800a ),         /* Simple arm type: FC_FLOAT */
/* 42 */  NdrFcLong( 0x5 ),   /* 5 */
/* 46 */  NdrFcShort( 0x800c ),         /* Simple arm type: FC_DOUBLE */
/* 48 */  NdrFcLong( 0xb ),   /* 11 */
/* 52 */  NdrFcShort( 0x8006 ),         /* Simple arm type: FC_SHORT */
/* 54 */  NdrFcLong( 0xa ),   /* 10 */
/* 58 */  NdrFcShort( 0x8008 ),         /* Simple arm type: FC_LONG */
/* 60 */  NdrFcLong( 0x6 ),   /* 6 */
/* 64 */  NdrFcShort( 0xd6 ), /* Offset= 214 (278) */
/* 66 */  NdrFcLong( 0x7 ),   /* 7 */
/* 70 */  NdrFcShort( 0x800c ),         /* Simple arm type: FC_DOUBLE */
/* 72 */  NdrFcLong( 0x8 ),   /* 8 */
/* 76 */  NdrFcShort( 0xd0 ), /* Offset= 208 (284) */
/* 78 */  NdrFcLong( 0xd ),   /* 13 */
/* 82 */  NdrFcShort( 0xe2 ), /* Offset= 226 (308) */
/* 84 */  NdrFcLong( 0x9 ),   /* 9 */
/* 88 */  NdrFcShort( 0xee ), /* Offset= 238 (326) */
/* 90 */  NdrFcLong( 0x2000 ),          /* 8192 */
/* 94 */  NdrFcShort( 0xfa ), /* Offset= 250 (344) */
/* 96 */  NdrFcLong( 0x24 ),  /* 36 */
/* 100 */ NdrFcShort( 0x308 ),          /* Offset= 776 (876) */
/* 102 */ NdrFcLong( 0x4024 ),          /* 16420 */
/* 106 */ NdrFcShort( 0x302 ),          /* Offset= 770 (876) */
/* 108 */ NdrFcLong( 0x4011 ),          /* 16401 */
/* 112 */ NdrFcShort( 0x300 ),          /* Offset= 768 (880) */
/* 114 */ NdrFcLong( 0x4002 ),          /* 16386 */
/* 118 */ NdrFcShort( 0x2fe ),          /* Offset= 766 (884) */
/* 120 */ NdrFcLong( 0x4003 ),          /* 16387 */
/* 124 */ NdrFcShort( 0x2fc ),          /* Offset= 764 (888) */
/* 126 */ NdrFcLong( 0x4004 ),          /* 16388 */
/* 130 */ NdrFcShort( 0x2fa ),          /* Offset= 762 (892) */
/* 132 */ NdrFcLong( 0x4005 ),          /* 16389 */
/* 136 */ NdrFcShort( 0x2f8 ),          /* Offset= 760 (896) */
/* 138 */ NdrFcLong( 0x400b ),          /* 16395 */
/* 142 */ NdrFcShort( 0x2e6 ),          /* Offset= 742 (884) */
/* 144 */ NdrFcLong( 0x400a ),          /* 16394 */
/* 148 */ NdrFcShort( 0x2e4 ),          /* Offset= 740 (888) */
/* 150 */ NdrFcLong( 0x4006 ),          /* 16390 */
/* 154 */ NdrFcShort( 0x2ea ),          /* Offset= 746 (900) */
/* 156 */ NdrFcLong( 0x4007 ),          /* 16391 */
/* 160 */ NdrFcShort( 0x2e0 ),          /* Offset= 736 (896) */
/* 162 */ NdrFcLong( 0x4008 ),          /* 16392 */
/* 166 */ NdrFcShort( 0x2e2 ),          /* Offset= 738 (904) */
/* 168 */ NdrFcLong( 0x400d ),          /* 16397 */
/* 172 */ NdrFcShort( 0x2e0 ),          /* Offset= 736 (908) */
/* 174 */ NdrFcLong( 0x4009 ),          /* 16393 */
/* 178 */ NdrFcShort( 0x2de ),          /* Offset= 734 (912) */
/* 180 */ NdrFcLong( 0x6000 ),          /* 24576 */
/* 184 */ NdrFcShort( 0x2dc ),          /* Offset= 732 (916) */
/* 186 */ NdrFcLong( 0x400c ),          /* 16396 */
/* 190 */ NdrFcShort( 0x2da ),          /* Offset= 730 (920) */
/* 192 */ NdrFcLong( 0x10 ),  /* 16 */
/* 196 */ NdrFcShort( 0x8002 ),         /* Simple arm type: FC_CHAR */
/* 198 */ NdrFcLong( 0x12 ),  /* 18 */
/* 202 */ NdrFcShort( 0x8006 ),         /* Simple arm type: FC_SHORT */
/* 204 */ NdrFcLong( 0x13 ),  /* 19 */
/* 208 */ NdrFcShort( 0x8008 ),         /* Simple arm type: FC_LONG */
/* 210 */ NdrFcLong( 0x16 ),  /* 22 */
/* 214 */ NdrFcShort( 0x8008 ),         /* Simple arm type: FC_LONG */
/* 216 */ NdrFcLong( 0x17 ),  /* 23 */
/* 220 */ NdrFcShort( 0x8008 ),         /* Simple arm type: FC_LONG */
/* 222 */ NdrFcLong( 0xe ),   /* 14 */
/* 226 */ NdrFcShort( 0x2be ),          /* Offset= 702 (928) */
/* 228 */ NdrFcLong( 0x400e ),          /* 16398 */
/* 232 */ NdrFcShort( 0x2c4 ),          /* Offset= 708 (940) */
/* 234 */ NdrFcLong( 0x4010 ),          /* 16400 */
/* 238 */ NdrFcShort( 0x2c2 ),          /* Offset= 706 (944) */
/* 240 */ NdrFcLong( 0x4012 ),          /* 16402 */
/* 244 */ NdrFcShort( 0x280 ),          /* Offset= 640 (884) */
/* 246 */ NdrFcLong( 0x4013 ),          /* 16403 */
/* 250 */ NdrFcShort( 0x27e ),          /* Offset= 638 (888) */
/* 252 */ NdrFcLong( 0x4016 ),          /* 16406 */
/* 256 */ NdrFcShort( 0x278 ),          /* Offset= 632 (888) */
/* 258 */ NdrFcLong( 0x4017 ),          /* 16407 */
/* 262 */ NdrFcShort( 0x272 ),          /* Offset= 626 (888) */
/* 264 */ NdrFcLong( 0x0 ),   /* 0 */
/* 268 */ NdrFcShort( 0x0 ),  /* Offset= 0 (268) */
/* 270 */ NdrFcLong( 0x1 ),   /* 1 */
/* 274 */ NdrFcShort( 0x0 ),  /* Offset= 0 (274) */
/* 276 */ NdrFcShort( 0xffffffff ),     /* Offset= -1 (275) */
/* 278 */
                                0x15,               /* FC_STRUCT */
                                0x7,                /* 7 */
/* 280 */ NdrFcShort( 0x8 ),  /* 8 */
/* 282 */ 0xb,                 /* FC_HYPER */
                                0x5b,               /* FC_END */
/* 284 */
                                0x12, 0x0,          /* FC_UP */
/* 286 */ NdrFcShort( 0xc ),  /* Offset= 12 (298) */
/* 288 */
                                0x1b,               /* FC_CARRAY */
                                0x1,                /* 1 */
/* 290 */ NdrFcShort( 0x2 ),  /* 2 */
/* 292 */ 0x9,                 /* Corr desc: FC_ULONG */
                                0x0,                /*  */
/* 294 */ NdrFcShort( 0xfffc ),         /* -4 */
/* 296 */ 0x6,                 /* FC_SHORT */
                                0x5b,               /* FC_END */
/* 298 */
                                0x17,               /* FC_CSTRUCT */
                                0x3,                /* 3 */
/* 300 */ NdrFcShort( 0x8 ),  /* 8 */
/* 302 */ NdrFcShort( 0xfffffff2 ),     /* Offset= -14 (288) */
/* 304 */ 0x8,                 /* FC_LONG */
                                0x8,                /* FC_LONG */
/* 306 */ 0x5c,                /* FC_PAD */
```

```
                                0x5b,               /* FC_END */
/* 308 */
                                0x2f,               /* FC_IP */
                                0x5a,               /* FC_CONSTANT_IID */
/* 310 */ NdrFcLong( 0x0 ),     /* 0 */
/* 314 */ NdrFcShort( 0x0 ),    /* 0 */
/* 316 */ NdrFcShort( 0x0 ),    /* 0 */
/* 318 */ 0xc0,                 /* 192 */
                                0x0,                /* 0 */
/* 320 */ 0x0,                  /* 0 */
                                0x0,                /* 0 */
/* 322 */ 0x0,                  /* 0 */
                                0x0,                /* 0 */
/* 324 */ 0x0,                  /* 0 */
                                0x46,               /* 70 */
/* 326 */
                                0x2f,               /* FC_IP */
                                0x5a,               /* FC_CONSTANT_IID */
/* 328 */ NdrFcLong( 0x20400 ),         /* 132096 */
/* 332 */ NdrFcShort( 0x0 ),    /* 0 */
/* 334 */ NdrFcShort( 0x0 ),    /* 0 */
/* 336 */ 0xc0,                 /* 192 */
                                0x0,                /* 0 */
/* 338 */ 0x0,                  /* 0 */
                                0x0,                /* 0 */
/* 340 */ 0x0,                  /* 0 */
                                0x0,                /* 0 */
/* 342 */ 0x0,                  /* 0 */
                                0x46,               /* 70 */
/* 344 */
                                0x12, 0x10,         /* FC_UP [pointer_deref] */
/* 346 */ NdrFcShort( 0x2 ),    /* Offset= 2 (348) */
/* 348 */
                                0x12, 0x0,          /* FC_UP */
/* 350 */ NdrFcShort( 0x1fc ),          /* Offset= 508 (858) */
/* 352 */
                                0x2a,               /* FC_ENCAPSULATED_UNION */
                                0x49,               /* 73 */
/* 354 */ NdrFcShort( 0x18 ),   /* 24 */
/* 356 */ NdrFcShort( 0xa ),    /* 10 */
/* 358 */ NdrFcLong( 0x8 ),     /* 8 */
/* 362 */ NdrFcShort( 0x58 ),   /* Offset= 88 (450) */
/* 364 */ NdrFcLong( 0xd ),     /* 13 */
/* 368 */ NdrFcShort( 0x78 ),   /* Offset= 120 (488) */
/* 370 */ NdrFcLong( 0x9 ),     /* 9 */
/* 374 */ NdrFcShort( 0x94 ),   /* Offset= 148 (522) */
/* 376 */ NdrFcLong( 0xc ),     /* 12 */
/* 380 */ NdrFcShort( 0xbc ),   /* Offset= 188 (568) */
/* 382 */ NdrFcLong( 0x24 ),    /* 36 */
/* 386 */ NdrFcShort( 0x114 ),          /* Offset= 276 (662) */
/* 388 */ NdrFcLong( 0x800d ),          /* 32781 */
/* 392 */ NdrFcShort( 0x130 ),          /* Offset= 304 (696) */
/* 394 */ NdrFcLong( 0x10 ),    /* 16 */
/* 398 */ NdrFcShort( 0x148 ),          /* Offset= 328 (726) */
/* 400 */ NdrFcLong( 0x2 ),     /* 2 */
/* 404 */ NdrFcShort( 0x160 ),          /* Offset= 352 (756) */
/* 406 */ NdrFcLong( 0x3 ),     /* 3 */
/* 410 */ NdrFcShort( 0x178 ),          /* Offset= 376 (786) */
/* 412 */ NdrFcLong( 0x14 ),    /* 20 */
/* 416 */ NdrFcShort( 0x190 ),          /* Offset= 400 (816) */
/* 418 */ NdrFcShort( 0xffffffff ),     /* Offset= -1 (417) */
/* 420 */
                                0x1b,               /* FC_CARRAY */
                                0x3,                /* 3 */
/* 422 */ NdrFcShort( 0x4 ),    /* 4 */
/* 424 */ 0x19,                 /* Corr desc:  field pointer, FC_ULONG */
                                0x0,                /*  */
/* 426 */ NdrFcShort( 0x0 ),    /* 0 */
/* 428 */
                                0x4b,               /* FC_PP */
                                0x5c,               /* FC_PAD */
/* 430 */
                                0x48,               /* FC_VARIABLE_REPEAT */
                                0x49,               /* FC_FIXED_OFFSET */
/* 432 */ NdrFcShort( 0x4 ),    /* 4 */
/* 434 */ NdrFcShort( 0x0 ),    /* 0 */
/* 436 */ NdrFcShort( 0x1 ),    /* 1 */
/* 438 */ NdrFcShort( 0x0 ),    /* 0 */
/* 440 */ NdrFcShort( 0x0 ),    /* 0 */
/* 442 */ 0x12, 0x0,            /* FC_UP */
/* 444 */ NdrFcShort( 0xffffff6e ),     /* Offset= -146 (298) */
/* 446 */
                                0x5b,               /* FC_END */

                                0x8,                /* FC_LONG */
/* 448 */ 0x5c,                 /* FC_PAD */
                                0x5b,               /* FC_END */
/* 450 */
                                0x16,               /* FC_PSTRUCT */
                                0x3,                /* 3 */
/* 452 */ NdrFcShort( 0x8 ),    /* 8 */
/* 454 */
                                0x4b,               /* FC_PP */
                                0x5c,               /* FC_PAD */
/* 456 */
                                0x46,               /* FC_NO_REPEAT */
                                0x5c,               /* FC_PAD */
/* 458 */ NdrFcShort( 0x4 ),    /* 4 */
/* 460 */ NdrFcShort( 0x4 ),    /* 4 */
/* 462 */ 0x11, 0x0,            /* FC_RP */
/* 464 */ NdrFcShort( 0xffffffd4 ),     /* Offset= -44 (420) */
/* 466 */
                                0x5b,               /* FC_END */

                                0x8,                /* FC_LONG */
/* 468 */ 0x8,                  /* FC_LONG */
                                0x5b,               /* FC_END */
/* 470 */
                                0x21,               /* FC_BOGUS_ARRAY */
                                0x3,                /* 3 */
/* 472 */ NdrFcShort( 0x0 ),    /* 0 */
/* 474 */ 0x19,                 /* Corr desc:  field pointer, FC_ULONG */
                                0x0,                /*  */
/* 476 */ NdrFcShort( 0x0 ),    /* 0 */
/* 478 */ NdrFcLong( 0xffffffff ),      /* -1 */
/* 482 */ 0x4c,                 /* FC_EMBEDDED_COMPLEX */
                                0x0,                /* 0 */
/* 484 */ NdrFcShort( 0xffffff50 ),     /* Offset= -176 (308) */
/* 486 */ 0x5c,                 /* FC_PAD */
                                0x5b,               /* FC_END */
/* 488 */
                                0x1a,               /* FC_BOGUS_STRUCT */
                                0x3,                /* 3 */
/* 490 */ NdrFcShort( 0x8 ),    /* 8 */
/* 492 */ NdrFcShort( 0x0 ),    /* 0 */
/* 494 */ NdrFcShort( 0x6 ),    /* Offset= 6 (500) */
```


Copyright Dell

```
/* 496 */ 0x8,                /* FC_LONG */
                              0x36,               /* FC_POINTER */
/* 498 */ 0x5c,               /* FC_PAD */
                              0x5b,               /* FC_END */
/* 500 */
                              0x11, 0x0,          /* FC_RP */
/* 502 */ NdrFcShort( 0xffffffe0 ),     /* Offset= -32 (470) */
/* 504 */
                              0x21,               /* FC_BOGUS_ARRAY */
                              0x3,                /* 3 */
/* 506 */ NdrFcShort( 0x0 ),  /* 0 */
/* 508 */ 0x19,               /* Corr desc:  field pointer, FC_ULONG */
                              0x0,                /*  */
/* 510 */ NdrFcShort( 0x0 ),  /* 0 */
/* 512 */ NdrFcLong( 0xffffffff ),      /* -1 */
/* 516 */ 0x4c,               /* FC_EMBEDDED_COMPLEX */
                              0x0,                /* 0 */
/* 518 */ NdrFcShort( 0xffffff40 ),     /* Offset= -192 (326) */
/* 520 */ 0x5c,               /* FC_PAD */
                              0x5b,               /* FC_END */
/* 522 */
                              0x1a,               /* FC_BOGUS_STRUCT */
                              0x3,                /* 3 */
/* 524 */ NdrFcShort( 0x8 ),  /* 8 */
/* 526 */ NdrFcShort( 0x0 ),  /* 0 */
/* 528 */ NdrFcShort( 0x6 ),  /* Offset= 6 (534) */
/* 530 */ 0x8,                /* FC_LONG */
                              0x36,               /* FC_POINTER */
/* 532 */ 0x5c,               /* FC_PAD */
                              0x5b,               /* FC_END */
/* 534 */
                              0x11, 0x0,          /* FC_RP */
/* 536 */ NdrFcShort( 0xffffffe0 ),     /* Offset= -32 (504) */
/* 538 */
                              0x1b,               /* FC_CARRAY */
                              0x3,                /* 3 */
/* 540 */ NdrFcShort( 0x4 ),  /* 4 */
/* 542 */ 0x19,               /* Corr desc:  field pointer, FC_ULONG */
                              0x0,                /*  */
/* 544 */ NdrFcShort( 0x0 ),  /* 0 */
/* 546 */
                              0x4b,               /* FC_PP */
                              0x5c,               /* FC_PAD */
/* 548 */
                              0x48,               /* FC_VARIABLE_REPEAT */
                              0x49,               /* FC_FIXED_OFFSET */
/* 550 */ NdrFcShort( 0x4 ),  /* 4 */
/* 552 */ NdrFcShort( 0x0 ),  /* 0 */
/* 554 */ NdrFcShort( 0x1 ),  /* 1 */
/* 556 */ NdrFcShort( 0x0 ),  /* 0 */
/* 558 */ NdrFcShort( 0x0 ),  /* 0 */
/* 560 */ 0x12, 0x0,          /* FC_UP */
/* 562 */ NdrFcShort( 0x182 ),          /* Offset= 386 (948) */
/* 564 */
                              0x5b,               /* FC_END */

                              0x8,                /* FC_LONG */
/* 566 */ 0x5c,               /* FC_PAD */
                              0x5b,               /* FC_END */
/* 568 */
                              0x1a,               /* FC_BOGUS_STRUCT */
                              0x3,                /* 3 */
/* 570 */ NdrFcShort( 0x8 ),  /* 8 */
/* 572 */ NdrFcShort( 0x0 ),  /* 0 */
/* 574 */ NdrFcShort( 0x6 ),  /* Offset= 6 (580) */
/* 576 */ 0x8,                /* FC_LONG */
                              0x36,               /* FC_POINTER */
/* 578 */ 0x5c,               /* FC_PAD */
                              0x5b,               /* FC_END */
/* 580 */
                              0x11, 0x0,          /* FC_RP */
/* 582 */ NdrFcShort( 0xffffffd4 ),     /* Offset= -44 (538) */
/* 584 */
                              0x2f,               /* FC_IP */
                              0x5a,               /* FC_CONSTANT_IID */
/* 586 */ NdrFcLong( 0x2f ),  /* 47 */
/* 590 */ NdrFcShort( 0x0 ),  /* 0 */
/* 592 */ NdrFcShort( 0x0 ),  /* 0 */
/* 594 */ 0xc0,               /* 192 */
                              0x0,                /* 0 */
/* 596 */ 0x0,                /* 0 */
                              0x0,                /* 0 */
/* 598 */ 0x0,                /* 0 */
                              0x0,                /* 0 */
/* 600 */ 0x0,                /* 0 */
                              0x46,               /* 70 */
/* 602 */
                              0x1b,               /* FC_CARRAY */
                              0x0,                /* 0 */
/* 604 */ NdrFcShort( 0x1 ),  /* 1 */
/* 606 */ 0x19,               /* Corr desc:  field pointer, FC_ULONG */
                              0x0,                /*  */
/* 608 */ NdrFcShort( 0x4 ),  /* 4 */
/* 610 */ 0x1,                /* FC_BYTE */
                              0x5b,               /* FC_END */
/* 612 */
                              0x1a,               /* FC_BOGUS_STRUCT */
                              0x3,                /* 3 */
/* 614 */ NdrFcShort( 0x10 ), /* 16 */
/* 616 */ NdrFcShort( 0x0 ),  /* 0 */
/* 618 */ NdrFcShort( 0xa ),  /* Offset= 10 (628) */
/* 620 */ 0x8,                /* FC_LONG */
                              0x8,                /* FC_LONG */
/* 622 */ 0x4c,               /* FC_EMBEDDED_COMPLEX */
                              0x0,                /* 0 */
/* 624 */ NdrFcShort( 0xffffffd8 ),     /* Offset= -40 (584) */
/* 626 */ 0x36,               /* FC_POINTER */
                              0x5b,               /* FC_END */
/* 628 */
                              0x12, 0x0,          /* FC_UP */
/* 630 */ NdrFcShort( 0xffffffe4 ),     /* Offset= -28 (602) */
/* 632 */
                              0x1b,               /* FC_CARRAY */
                              0x3,                /* 3 */
/* 634 */ NdrFcShort( 0x4 ),  /* 4 */
/* 636 */ 0x19,               /* Corr desc:  field pointer, FC_ULONG */
                              0x0,                /*  */
/* 638 */ NdrFcShort( 0x0 ),  /* 0 */
/* 640 */
                              0x4b,               /* FC_PP */
                              0x5c,               /* FC_PAD */
/* 642 */
                              0x48,               /* FC_VARIABLE_REPEAT */
                              0x49,               /* FC_FIXED_OFFSET */
/* 644 */ NdrFcShort( 0x4 ),  /* 4 */
/* 646 */ NdrFcShort( 0x0 ),  /* 0 */
```


Copyright Dell

```
/* 648 */ NdrFcShort( 0x1 ),  /* 1 */
/* 650 */ NdrFcShort( 0x0 ),  /* 0 */
/* 652 */ NdrFcShort( 0x0 ),  /* 0 */
/* 654 */ 0x12, 0x0,          /* FC_UP */
/* 656 */ NdrFcShort( 0xffffffd4 ),     /* Offset= -44 (612) */
/* 658 */
                              0x5b,               /* FC_END */

                              0x8,                /* FC_LONG */
/* 660 */ 0x5c,               /* FC_PAD */
                              0x5b,               /* FC_END */
/* 662 */
                              0x1a,               /* FC_BOGUS_STRUCT */
                              0x3,                /* 3 */
/* 664 */ NdrFcShort( 0x8 ),  /* 8 */
/* 666 */ NdrFcShort( 0x0 ),  /* 0 */
/* 668 */ NdrFcShort( 0x6 ),  /* Offset= 6 (674) */
/* 670 */ 0x8,                /* FC_LONG */
                              0x36,               /* FC_POINTER */
/* 672 */ 0x5c,               /* FC_PAD */
                              0x5b,               /* FC_END */
/* 674 */
                              0x11, 0x0,          /* FC_RP */
/* 676 */ NdrFcShort( 0xffffffd4 ),     /* Offset= -44 (632) */
/* 678 */
                              0x1d,               /* FC_SMFARRAY */
                              0x0,                /* 0 */
/* 680 */ NdrFcShort( 0x8 ),  /* 8 */
/* 682 */ 0x2,                /* FC_CHAR */
                              0x5b,               /* FC_END */
/* 684 */
                              0x15,               /* FC_STRUCT */
                              0x3,                /* 3 */
/* 686 */ NdrFcShort( 0x10 ), /* 16 */
/* 688 */ 0x8,                /* FC_LONG */
                              0x6,                /* FC_SHORT */
/* 690 */ 0x6,                /* FC_SHORT */
                              0x4c,               /* FC_EMBEDDED_COMPLEX */
/* 692 */ 0x0,                /* 0 */
                              NdrFcShort( 0xfffffff1 ),     /* Offset= -15 (678) */
                              0x5b,               /* FC_END */
/* 696 */
                              0x1a,               /* FC_BOGUS_STRUCT */
                              0x3,                /* 3 */
/* 698 */ NdrFcShort( 0x18 ), /* 24 */
/* 700 */ NdrFcShort( 0x0 ),  /* 0 */
/* 702 */ NdrFcShort( 0xa ),  /* Offset= 10 (712) */
/* 704 */ 0x8,                /* FC_LONG */
                              0x36,               /* FC_POINTER */
/* 706 */ 0x4c,               /* FC_EMBEDDED_COMPLEX */
                              0x0,                /* 0 */
/* 708 */ NdrFcShort( 0xffffffe8 ),     /* Offset= -24 (684) */
/* 710 */ 0x5c,               /* FC_PAD */
                              0x5b,               /* FC_END */
/* 712 */
                              0x11, 0x0,          /* FC_RP */
/* 714 */ NdrFcShort( 0xffffff0c ),     /* Offset= -244 (470) */
/* 716 */
                              0x1b,               /* FC_CARRAY */
                              0x0,                /* 0 */
/* 718 */ NdrFcShort( 0x1 ),  /* 1 */
/* 720 */ 0x19,               /* Corr desc:  field pointer, FC_ULONG */
                              0x0,                /*  */
/* 722 */ NdrFcShort( 0x0 ),  /* 0 */
/* 724 */ 0x1,                /* FC_BYTE */
                              0x5b,               /* FC_END */
/* 726 */
                              0x16,               /* FC_PSTRUCT */
                              0x3,                /* 3 */
/* 728 */ NdrFcShort( 0x8 ),  /* 8 */
/* 730 */
                              0x4b,               /* FC_PP */
                              0x5c,               /* FC_PAD */
/* 732 */
                              0x46,               /* FC_NO_REPEAT */
                              0x5c,               /* FC_PAD */
/* 734 */ NdrFcShort( 0x4 ),  /* 4 */
/* 736 */ NdrFcShort( 0x4 ),  /* 4 */
/* 738 */ 0x12, 0x0,          /* FC_UP */
/* 740 */ NdrFcShort( 0xffffffe8 ),     /* Offset= -24 (716) */
/* 742 */
                              0x5b,               /* FC_END */

                              0x8,                /* FC_LONG */
/* 744 */ 0x8,                /* FC_LONG */
                              0x5b,               /* FC_END */
/* 746 */
                              0x1b,               /* FC_CARRAY */
                              0x1,                /* 1 */
/* 748 */ NdrFcShort( 0x2 ),  /* 2 */
/* 750 */ 0x19,               /* Corr desc:  field pointer, FC_ULONG */
                              0x0,                /*  */
/* 752 */ NdrFcShort( 0x0 ),  /* 0 */
/* 754 */ 0x6,                /* FC_SHORT */
                              0x5b,               /* FC_END */
/* 756 */
                              0x16,               /* FC_PSTRUCT */
                              0x3,                /* 3 */
/* 758 */ NdrFcShort( 0x8 ),  /* 8 */
/* 760 */
                              0x4b,               /* FC_PP */
                              0x5c,               /* FC_PAD */
/* 762 */
                              0x46,               /* FC_NO_REPEAT */
                              0x5c,               /* FC_PAD */
/* 764 */ NdrFcShort( 0x4 ),  /* 4 */
/* 766 */ NdrFcShort( 0x4 ),  /* 4 */
/* 768 */ 0x12, 0x0,          /* FC_UP */
/* 770 */ NdrFcShort( 0xffffffe8 ),     /* Offset= -24 (746) */
/* 772 */
                              0x5b,               /* FC_END */

                              0x8,                /* FC_LONG */
/* 774 */ 0x8,                /* FC_LONG */
                              0x5b,               /* FC_END */
/* 776 */
                              0x1b,               /* FC_CARRAY */
                              0x3,                /* 3 */
/* 778 */ NdrFcShort( 0x4 ),  /* 4 */
/* 780 */ 0x19,               /* Corr desc:  field pointer, FC_ULONG */
                              0x0,                /*  */
/* 782 */ NdrFcShort( 0x0 ),  /* 0 */
/* 784 */ 0x8,                /* FC_LONG */
                              0x5b,               /* FC_END */
/* 786 */
                              0x16,               /* FC_PSTRUCT */
```


Copyright Dell

```
                                0x3,                /* 3 */
/* 788 */ NdrFcShort( 0x8 ),  /* 8 */
/* 790 */
                                0x4b,               /* FC_PP */
                                0x5c,               /* FC_PAD */
/* 792 */
                                0x46,               /* FC_NO_REPEAT */
                                0x5c,               /* FC_PAD */
/* 794 */ NdrFcShort( 0x4 ),  /* 4 */
/* 796 */ NdrFcShort( 0x4 ),  /* 4 */
/* 798 */ 0x12, 0x0,          /* FC_UP */
/* 800 */ NdrFcShort( 0xfffffe8 ),     /* Offset= -24 (776) */
/* 802 */
                                0x5b,               /* FC_END */

                                0x8,                /* FC_LONG */
/* 804 */ 0x8,                /* FC_LONG */
                                0x5b,               /* FC_END */
/* 806 */
                                0x1b,               /* FC_CARRAY */
                                0x7,                /* 7 */
/* 808 */ NdrFcShort( 0x8 ),  /* 8 */
/* 810 */ 0x19,               /* Corr desc:  field pointer, FC_ULONG */
                                0x0,                /*  */
/* 812 */ NdrFcShort( 0x0 ),  /* 0 */
/* 814 */ 0xb,                /* FC_HYPER */
                                0x5b,               /* FC_END */
/* 816 */
                                0x16,               /* FC_PSTRUCT */
                                0x3,                /* 3 */
/* 818 */ NdrFcShort( 0x8 ),  /* 8 */
/* 820 */
                                0x4b,               /* FC_PP */
                                0x5c,               /* FC_PAD */
/* 822 */
                                0x46,               /* FC_NO_REPEAT */
                                0x5c,               /* FC_PAD */
/* 824 */ NdrFcShort( 0x4 ),  /* 4 */
/* 826 */ NdrFcShort( 0x4 ),  /* 4 */
/* 828 */ 0x12, 0x0,          /* FC_UP */
/* 830 */ NdrFcShort( 0xfffffe8 ),     /* Offset= -24 (806) */
/* 832 */
                                0x5b,               /* FC_END */

                                0x8,                /* FC_LONG */
/* 834 */ 0x8,                /* FC_LONG */
                                0x5b,               /* FC_END */
/* 836 */
                                0x15,               /* FC_STRUCT */
                                0x3,                /* 3 */
/* 838 */ NdrFcShort( 0x8 ),  /* 8 */
/* 840 */ 0x8,                /* FC_LONG */
                                0x8,                /* FC_LONG */
/* 842 */ 0x5c,               /* FC_PAD */
                                0x5b,               /* FC_END */
/* 844 */
                                0x1b,               /* FC_CARRAY */
                                0x3,                /* 3 */
/* 846 */ NdrFcShort( 0x8 ),  /* 8 */
/* 848 */ 0x7,                /* Corr desc: FC_USHORT */
                                0x0,                /*  */
/* 850 */ NdrFcShort( 0xffd8 ),        /* -40 */
/* 852 */ 0x4c,               /* FC_EMBEDDED_COMPLEX */
                                0x0,                /* 0 */
/* 854 */ NdrFcShort( 0xfffffee ),     /* Offset= -18 (836) */
/* 856 */ 0x5c,               /* FC_PAD */
                                0x5b,               /* FC_END */
/* 858 */
                                0x1a,               /* FC_BOGUS_STRUCT */
                                0x3,                /* 3 */
/* 860 */ NdrFcShort( 0x28 ), /* 40 */
/* 862 */ NdrFcShort( 0xfffffee ),     /* Offset= -18 (844) */
/* 864 */ NdrFcShort( 0x0 ),  /* Offset= 0 (864) */
/* 866 */ 0x6,                /* FC_SHORT */
                                0x6,                /* FC_SHORT */
/* 868 */ 0x38,               /* FC_ALIGNM4 */
                                0x8,                /* FC_LONG */
/* 870 */ 0x8,                /* FC_LONG */
                                0x4c,               /* FC_EMBEDDED_COMPLEX */
/* 872 */ 0x0,                /* 0 */
                                NdrFcShort( 0xfffffdf7 ),     /* Offset= -521 (352) */
                                0x5b,               /* FC_END */
/* 876 */
                                0x12, 0x0,          /* FC_UP */
/* 878 */ NdrFcShort( 0xfffffef6 ),     /* Offset= -266 (612) */
/* 880 */
                                0x12, 0x8,          /* FC_UP [simple_pointer] */
/* 882 */ 0x1,                /* FC_BYTE */
                                0x5c,               /* FC_PAD */
/* 884 */
                                0x12, 0x8,          /* FC_UP [simple_pointer] */
/* 886 */ 0x6,                /* FC_SHORT */
                                0x5c,               /* FC_PAD */
/* 888 */
                                0x12, 0x8,          /* FC_UP [simple_pointer] */
/* 890 */ 0x8,                /* FC_LONG */
                                0x5c,               /* FC_PAD */
/* 892 */
                                0x12, 0x8,          /* FC_UP [simple_pointer] */
/* 894 */ 0xa,                /* FC_FLOAT */
                                0x5c,               /* FC_PAD */
/* 896 */
                                0x12, 0x8,          /* FC_UP [simple_pointer] */
/* 898 */ 0xc,                /* FC_DOUBLE */
                                0x5c,               /* FC_PAD */
/* 900 */
                                0x12, 0x0,          /* FC_UP */
/* 902 */ NdrFcShort( 0xfffffd90 ),     /* Offset= -624 (278) */
/* 904 */
                                0x12, 0x10,         /* FC_UP [pointer_deref] */
/* 906 */ NdrFcShort( 0xfffffd92 ),     /* Offset= -622 (284) */
/* 908 */
                                0x12, 0x10,         /* FC_UP [pointer_deref] */
/* 910 */ NdrFcShort( 0xfffffda6 ),     /* Offset= -602 (308) */
/* 912 */
                                0x12, 0x10,         /* FC_UP [pointer_deref] */
/* 914 */ NdrFcShort( 0xfffffdb4 ),     /* Offset= -588 (326) */
/* 916 */
                                0x12, 0x10,         /* FC_UP [pointer_deref] */
/* 918 */ NdrFcShort( 0xfffffdc2 ),     /* Offset= -574 (344) */
/* 920 */
                                0x12, 0x10,         /* FC_UP [pointer_deref] */
/* 922 */ NdrFcShort( 0x2 ),  /* Offset= 2 (924) */
/* 924 */
                                0x12, 0x0,          /* FC_UP */
/* 926 */ NdrFcShort( 0x16 ), /* Offset= 22 (948) */
```


Copyright Dell

```
/* 928 */
                                0x15,               /* FC_STRUCT */
                                0x7,                /* 7 */
/* 930 */ NdrFcShort( 0x10 ), /* 16 */
/* 932 */ 0x6,                /* FC_SHORT */
                                0x1,                /* FC_BYTE */
/* 934 */ 0x1,                /* FC_BYTE */
                                0x38,               /* FC_ALIGNM4 */
/* 936 */ 0x8,                /* FC_LONG */
                                0x39,               /* FC_ALIGNM8 */
/* 938 */ 0xb,                /* FC_HYPER */
                                0x5b,               /* FC_END */
/* 940 */
                                0x12, 0x0,          /* FC_UP */
/* 942 */ NdrFcShort( 0xfffffff2 ),     /* Offset= -14 (928) */
/* 944 */
                                0x12, 0x8,          /* FC_UP [simple_pointer] */
/* 946 */ 0x2,                /* FC_CHAR */
                                0x5c,               /* FC_PAD */
/* 948 */
                                0x1a,               /* FC_BOGUS_STRUCT */
                                0x7,                /* 7 */
/* 950 */ NdrFcShort( 0x20 ), /* 32 */
/* 952 */ NdrFcShort( 0x0 ),  /* 0 */
/* 954 */ NdrFcShort( 0x0 ),  /* Offset= 0 (954) */
/* 956 */ 0x8,                /* FC_LONG */
                                0x8,                /* FC_LONG */
/* 958 */ 0x6,                /* FC_SHORT */
                                0x6,                /* FC_SHORT */
/* 960 */ 0x6,                /* FC_SHORT */
                                0x6,                /* FC_SHORT */
/* 962 */ 0x4c,               /* FC_EMBEDDED_COMPLEX */
                                0x0,                /* 0 */
/* 964 */ NdrFcShort( 0xfffffc42 ),     /* Offset= -958 (6) */
/* 966 */ 0x5c,               /* FC_PAD */
                                0x5b,               /* FC_END */
/* 968 */ 0xb4,               /* FC_USER_MARSHAL */
                                0x83,               /* 131 */
/* 970 */ NdrFcShort( 0x0 ),  /* 0 */
/* 972 */ NdrFcShort( 0x10 ), /* 16 */
/* 974 */ NdrFcShort( 0x0 ),  /* 0 */
/* 976 */ NdrFcShort( 0xfffffc32 ),     /* Offset= -974 (2) */
/* 978 */
                                0x11, 0x4,          /* FC_RP [alloced_on_stack] */
/* 980 */ NdrFcShort( 0x6 ),  /* Offset= 6 (986) */
/* 982 */
                                0x13, 0x0,          /* FC_OP */
/* 984 */ NdrFcShort( 0xffffffdc ),     /* Offset= -36 (948) */
/* 986 */ 0xb4,               /* FC_USER_MARSHAL */
                                0x83,               /* 131 */
/* 988 */ NdrFcShort( 0x0 ),  /* 0 */
/* 990 */ NdrFcShort( 0x10 ), /* 16 */
/* 992 */ NdrFcShort( 0x0 ),  /* 0 */
/* 994 */ NdrFcShort( 0xfffffff4 ),     /* Offset= -12 (982) */

                                0x0
        }
    };

const CInterfaceProxyVtbl * _tpcc_com_ps_ProxyVtblList[] =
{
    ( CInterfaceProxyVtbl *) &_ITPCCProxyVtbl,
    0
};

const CInterfaceStubVtbl * _tpcc_com_ps_StubVtblList[] =
{
    ( CInterfaceStubVtbl *) &_ITPCCStubVtbl,
    0
};

PCInterfaceName const _tpcc_com_ps_InterfaceNamesList[] =
{
    "ITPCC",
    0
};


#define _tpcc_com_ps_CHECK_IID(n)       IID_GENERIC_CHECK_IID( _tpcc_com_ps, pIID, n)

int __stdcall _tpcc_com_ps_IID_Lookup( const IID * pIID, int * pIndex )
{

    if(!_tpcc_com_ps_CHECK_IID(0))
        {
        *pIndex = 0;
        return 1;
        }

    return 0;
}

const ExtendedProxyFileInfo tpcc_com_ps_ProxyFileInfo =
{
    (PCInterfaceProxyVtblList *) & _tpcc_com_ps_ProxyVtblList,
    (PCInterfaceStubVtblList *) & _tpcc_com_ps_StubVtblList,
    (const PCInterfaceName * ) & _tpcc_com_ps_InterfaceNamesList,
    0, // no delegation
    & _tpcc_com_ps_IID_Lookup,
    1,
    2,
    0, /* table of [async_uuid] interfaces */
    0, /* Filler1 */
    0, /* Filler2 */
    0  /* Filler3 */
};


#endif /* !defined(_M_IA64) && !defined(_M_AXP64)*/


#pragma warning( disable: 4049 )  /* more than 64k source lines */

/* this ALWAYS GENERATED file contains the proxy stub code */


 /* File created by MIDL compiler version 5.03.0280 */
/* at Sat Apr 08 16:40:10 2000
 */
/* Compiler settings for .\src\tpcc_com_ps.idl:
    Oicf (OptLev=i2), W1, Zp8, env=Win64 (32b run,appending), ms_ext, c_ext, robust
    error checks: allocation ref bounds_check enum stub_data
    VC __declspec() decoration level:
         __declspec(uuid()), __declspec(selectany), __declspec(novtable)
         DECLSPEC_UUID(), MIDL_INTERFACE()
*/
```

```
//@@MIDL_FILE_HEADING(  )

#if defined(_M_IA64) || defined(_M_AXP64)
#define USE_STUBLESS_PROXY


/* verify that the <rpcproxy.h> version is high enough to compile this file*/
#ifndef __REDQ_RPCPROXY_H_VERSION__
#define __REQUIRED_RPCPROXY_H_VERSION__ 475
#endif


#include "rpcproxy.h"
#ifndef __RPCPROXY_H_VERSION__
#error this stub requires an updated version of <rpcproxy.h>
#endif // __RPCPROXY_H_VERSION__


#include "tpcc_com_ps.h"

#define TYPE_FORMAT_STRING_SIZE   979
#define PROC_FORMAT_STRING_SIZE   253
#define TRANSMIT_AS_TABLE_SIZE    0
#define WIRE_MARSHAL_TABLE_SIZE   1

typedef struct _MIDL_TYPE_FORMAT_STRING
    {
    short          Pad;
    unsigned char  Format[ TYPE_FORMAT_STRING_SIZE ];
    } MIDL_TYPE_FORMAT_STRING;

typedef struct _MIDL_PROC_FORMAT_STRING
    {
    short          Pad;
    unsigned char  Format[ PROC_FORMAT_STRING_SIZE ];
    } MIDL_PROC_FORMAT_STRING;


extern const MIDL_TYPE_FORMAT_STRING __MIDL_TypeFormatString;
extern const MIDL_PROC_FORMAT_STRING __MIDL_ProcFormatString;


/* Standard interface: __MIDL_itf_tpcc_com_ps_0000, ver. 0.0,
   GUID={0x00000000,0x0000,0x0000,{0x00,0x00,0x00,0x00,0x00,0x00,0x00,0x00}} */


/* Object interface: IUnknown, ver. 0.0,
   GUID={0x00000000,0x0000,0x0000,{0xC0,0x00,0x00,0x00,0x00,0x00,0x00,0x46}} */


/* Object interface: ITPCC, ver. 0.0,
   GUID={0xFEEE6AA2,0x84B1,0x11d2,{0xBA,0x47,0x00,0xC0,0x4F,0xBF,0xE0,0x8B}} */


extern const MIDL_STUB_DESC Object_StubDesc;


extern const MIDL_SERVER_INFO ITPCC_ServerInfo;

#pragma code_seg(".orpc")
static const unsigned short ITPCC_FormatStringOffsetTable[] =
    {
    0,
    44,
    88,
    132,
    176,
    220
    };

static const MIDL_SERVER_INFO ITPCC_ServerInfo =
    {
    &Object_StubDesc,
    0,
    __MIDL_ProcFormatString.Format,
    &ITPCC_FormatStringOffsetTable[-3],
    0,
    0,
    0,
    0
    };

static const MIDL_STUBLESS_PROXY_INFO ITPCC_ProxyInfo =
    {
    &Object_StubDesc,
    __MIDL_ProcFormatString.Format,
    &ITPCC_FormatStringOffsetTable[-3],
    0,
    0,
    0
    };

CINTERFACE_PROXY_VTABLE(9) _ITPCCProxyVtbl =
{
    &ITPCC_ProxyInfo,
    &IID_ITPCC,
    IUnknown_QueryInterface_Proxy,
    IUnknown_AddRef_Proxy,
    IUnknown_Release_Proxy ,
    (void *)-1 /* ITPCC::NewOrder */ ,
    (void *)-1 /* ITPCC::Payment */ ,
    (void *)-1 /* ITPCC::Delivery */ ,
    (void *)-1 /* ITPCC::StockLevel */ ,
    (void *)-1 /* ITPCC::OrderStatus */ ,
    (void *)-1 /* ITPCC::CallSetComplete */
};

const CInterfaceStubVtbl _ITPCCStubVtbl =
{
    &IID_ITPCC,
    &ITPCC_ServerInfo,
    9,
    0, /* pure interpreted */
    CStdStubBuffer_METHODS
};

extern const USER_MARSHAL_ROUTINE_QUADRUPLE UserMarshalRoutines[ WIRE_MARSHAL_TABLE_SIZE
];

static const MIDL_STUB_DESC Object_StubDesc =
    {
    0,
    NdrOleAllocate,
    NdrOleFree,
    0,
    0,
```


Copyright Dell

```
    0,
    0,
    0,
    __MIDL_TypeFormatString.Format,
    1, /* -error bounds_check flag */
    0x50002, /* Ndr library version */
    0,
    0x5030118, /* MIDL Version 5.3.280 */
    0,
    UserMarshalRoutines,
    0,  /* notify & notify_flag routine table */
    0x1, /* MIDL flag */
    0,  /* Reserved3 */
    0,  /* Reserved4 */
    0   /* Reserved5 */
    };

#pragma data_seg(".rdata")

static const USER_MARSHAL_ROUTINE_QUADRUPLE UserMarshalRoutines[ WIRE_MARSHAL_TABLE_SIZE
] =
        {

            {
            VARIANT_UserSize
            ,VARIANT_UserMarshal
            ,VARIANT_UserUnmarshal
            ,VARIANT_UserFree
            }

        };


#if !defined(__RPC_WIN64__)
#error  Invalid build platform for this stub.
#endif

static const MIDL_PROC_FORMAT_STRING __MIDL_ProcFormatString =
    {
        0,
        {

          /* Procedure NewOrder */

                                0x33,               /* FC_AUTO_HANDLE */
                                0x6c,               /* Old Flags:  object, Oi2 */
/*  2 */  NdrFcLong( 0x0 ),   /* 0 */
/*  6 */  NdrFcShort( 0x3 ),  /* 3 */
#ifndef _ALPHA_
/*  8 */  NdrFcShort( 0x38 ), /* ia64 Stack size/offset = 56 */
#else
                                NdrFcShort( 0x30 ), /* axp64 Stack size/offset = 48 */
#endif
/* 10 */  NdrFcShort( 0x0 ),  /* 0 */
/* 12 */  NdrFcShort( 0x8 ),  /* 8 */
/* 14 */  0x47,               /* Oi2 Flags:  srv must size, clt must size, has return,
has ext, */
                                0x3,                /* 3 */
/* 16 */  0xa,                /* 10 */
                                0x7,                /* Ext Flags:  new corr desc, clt corr
check, srv corr check, */
/* 18 */  NdrFcShort( 0x20 ), /* 32 */
/* 20 */  NdrFcShort( 0x20 ), /* 32 */
/* 22 */  NdrFcShort( 0x0 ),  /* 0 */
/* 24 */  NdrFcShort( 0x0 ),  /* 0 */

          /* Parameter txn_in */

/* 26 */  NdrFcShort( 0x8b ), /* Flags:  must size, must free, in, by val, */
#ifndef _ALPHA_
/* 28 */  NdrFcShort( 0x10 ), /* ia64 Stack size/offset = 16 */
#else
                                NdrFcShort( 0x8 ),  /* axp64 Stack size/offset = 8 */
#endif
/* 30 */  NdrFcShort( 0x3b6 ),          /* Type Offset=950 */

          /* Parameter txn_out */

/* 32 */  NdrFcShort( 0x6113 ),         /* Flags:  must size, must free, out, simple ref,
srv alloc size=24 */
#ifndef _ALPHA_
/* 34 */  NdrFcShort( 0x28 ), /* ia64 Stack size/offset = 40 */
#else
                                NdrFcShort( 0x20 ), /* axp64 Stack size/offset = 32 */
#endif
/* 36 */  NdrFcShort( 0x3c8 ),          /* Type Offset=968 */

          /* Return value */

/* 38 */  NdrFcShort( 0x70 ), /* Flags:  out, return, base type, */
#ifndef _ALPHA_
/* 40 */  NdrFcShort( 0x30 ), /* ia64 Stack size/offset = 48 */
#else
                                NdrFcShort( 0x28 ), /* axp64 Stack size/offset = 40 */
#endif
/* 42 */  0x8,                /* FC_LONG */
                                0x0,                /* 0 */

          /* Procedure Payment */

/* 44 */  0x33,               /* FC_AUTO_HANDLE */
                                0x6c,               /* Old Flags:  object, Oi2 */
/* 46 */  NdrFcLong( 0x0 ),   /* 0 */
/* 50 */  NdrFcShort( 0x4 ),  /* 4 */
#ifndef _ALPHA_
/* 52 */  NdrFcShort( 0x38 ), /* ia64 Stack size/offset = 56 */
#else
                                NdrFcShort( 0x30 ), /* axp64 Stack size/offset = 48 */
#endif
/* 54 */  NdrFcShort( 0x0 ),  /* 0 */
/* 56 */  NdrFcShort( 0x8 ),  /* 8 */
/* 58 */  0x47,               /* Oi2 Flags:  srv must size, clt must size, has return,
has ext, */
                                0x3,                /* 3 */
/* 60 */  0xa,                /* 10 */
                                0x7,                /* Ext Flags:  new corr desc, clt corr
check, srv corr check, */
/* 62 */  NdrFcShort( 0x20 ), /* 32 */
/* 64 */  NdrFcShort( 0x20 ), /* 32 */
/* 66 */  NdrFcShort( 0x0 ),  /* 0 */
/* 68 */  NdrFcShort( 0x0 ),  /* 0 */

          /* Parameter txn_in */

/* 70 */  NdrFcShort( 0x8b ), /* Flags:  must size, must free, in, by val, */
#ifndef _ALPHA_
```


Copyright Dell

```
/* 72 */  NdrFcShort( 0x10 ), /* ia64 Stack size/offset = 16 */
#else
                               NdrFcShort( 0x8 ),  /* axp64 Stack size/offset = 8 */
#endif
/* 74 */  NdrFcShort( 0x3b6 ),          /* Type Offset=950 */

          /* Parameter txn_out */

/* 76 */  NdrFcShort( 0x6113 ),         /* Flags:  must size, must free, out, simple ref,
srv alloc size=24 */
#ifndef _ALPHA_
/* 78 */  NdrFcShort( 0x28 ), /* ia64 Stack size/offset = 40 */
#else
                               NdrFcShort( 0x20 ), /* axp64 Stack size/offset = 32 */
#endif
/* 80 */  NdrFcShort( 0x3c8 ),          /* Type Offset=968 */

          /* Return value */

/* 82 */  NdrFcShort( 0x70 ), /* Flags:  out, return, base type, */
#ifndef _ALPHA_
/* 84 */  NdrFcShort( 0x30 ), /* ia64 Stack size/offset = 48 */
#else
                               NdrFcShort( 0x28 ), /* axp64 Stack size/offset = 40 */
#endif
/* 86 */  0x8,                /* FC_LONG */
                               0x0,                /* 0 */

          /* Procedure Delivery */

/* 88 */  0x33,               /* FC_AUTO_HANDLE */
                               0x6c,               /* Old Flags:  object, Oi2 */
/* 90 */  NdrFcLong( 0x0 ),   /* 0 */
/* 94 */  NdrFcShort( 0x5 ),  /* 5 */
#ifndef _ALPHA_
/* 96 */  NdrFcShort( 0x38 ), /* ia64 Stack size/offset = 56 */
#else
                               NdrFcShort( 0x30 ), /* axp64 Stack size/offset = 48 */
#endif
/* 98 */  NdrFcShort( 0x0 ),  /* 0 */
/* 100 */ NdrFcShort( 0x8 ),  /* 8 */
/* 102 */ 0x47,               /* Oi2 Flags:  srv must size, clt must size, has return,
has ext, */
                               0x3,                /* 3 */
/* 104 */ 0xa,                /* 10 */
                               0x7,                /* Ext Flags:  new corr desc, clt corr
check, srv corr check, */
/* 106 */ NdrFcShort( 0x20 ), /* 32 */
/* 108 */ NdrFcShort( 0x20 ), /* 32 */
/* 110 */ NdrFcShort( 0x0 ),  /* 0 */
/* 112 */ NdrFcShort( 0x0 ),  /* 0 */

          /* Parameter txn_in */

/* 114 */ NdrFcShort( 0x8b ), /* Flags:  must size, must free, in, by val, */
#ifndef _ALPHA_
/* 116 */ NdrFcShort( 0x10 ), /* ia64 Stack size/offset = 16 */
#else
                               NdrFcShort( 0x8 ),  /* axp64 Stack size/offset = 8 */
#endif
/* 118 */ NdrFcShort( 0x3b6 ),          /* Type Offset=950 */

          /* Parameter txn_out */

/* 120 */ NdrFcShort( 0x6113 ),         /* Flags:  must size, must free, out, simple ref,
srv alloc size=24 */
#ifndef _ALPHA_
/* 122 */ NdrFcShort( 0x28 ), /* ia64 Stack size/offset = 40 */
#else
                               NdrFcShort( 0x20 ), /* axp64 Stack size/offset = 32 */
#endif
/* 124 */ NdrFcShort( 0x3c8 ),          /* Type Offset=968 */

          /* Return value */

/* 126 */ NdrFcShort( 0x70 ), /* Flags:  out, return, base type, */
#ifndef _ALPHA_
/* 128 */ NdrFcShort( 0x30 ), /* ia64 Stack size/offset = 48 */
#else
                               NdrFcShort( 0x28 ), /* axp64 Stack size/offset = 40 */
#endif
/* 130 */ 0x8,                /* FC_LONG */
                               0x0,                /* 0 */

          /* Procedure StockLevel */

/* 132 */ 0x33,               /* FC_AUTO_HANDLE */
                               0x6c,               /* Old Flags:  object, Oi2 */
/* 134 */ NdrFcLong( 0x0 ),   /* 0 */
/* 138 */ NdrFcShort( 0x6 ),  /* 6 */
#ifndef _ALPHA_
/* 140 */ NdrFcShort( 0x38 ), /* ia64 Stack size/offset = 56 */
#else
                               NdrFcShort( 0x30 ), /* axp64 Stack size/offset = 48 */
#endif
/* 142 */ NdrFcShort( 0x0 ),  /* 0 */
/* 144 */ NdrFcShort( 0x8 ),  /* 8 */
/* 146 */ 0x47,               /* Oi2 Flags:  srv must size, clt must size, has return,
has ext, */
                               0x3,                /* 3 */
/* 148 */ 0xa,                /* 10 */
                               0x7,                /* Ext Flags:  new corr desc, clt corr
check, srv corr check, */
/* 150 */ NdrFcShort( 0x20 ), /* 32 */
/* 152 */ NdrFcShort( 0x20 ), /* 32 */
/* 154 */ NdrFcShort( 0x0 ),  /* 0 */
/* 156 */ NdrFcShort( 0x0 ),  /* 0 */

          /* Parameter txn_in */

/* 158 */ NdrFcShort( 0x8b ), /* Flags:  must size, must free, in, by val, */
#ifndef _ALPHA_
/* 160 */ NdrFcShort( 0x10 ), /* ia64 Stack size/offset = 16 */
#else
                               NdrFcShort( 0x8 ),  /* axp64 Stack size/offset = 8 */
#endif
/* 162 */ NdrFcShort( 0x3b6 ),          /* Type Offset=950 */

          /* Parameter txn_out */

/* 164 */ NdrFcShort( 0x6113 ),         /* Flags:  must size, must free, out, simple ref,
srv alloc size=24 */
#ifndef _ALPHA_
/* 166 */ NdrFcShort( 0x28 ), /* ia64 Stack size/offset = 40 */
#else
                               NdrFcShort( 0x20 ), /* axp64 Stack size/offset = 32 */
```


Copyright Dell

```
#endif
/* 168 */ NdrFcShort( 0x3c8 ),          /* Type Offset=968 */

          /* Return value */

/* 170 */ NdrFcShort( 0x70 ), /* Flags:  out, return, base type, */
#ifndef _ALPHA_
/* 172 */ NdrFcShort( 0x30 ), /* ia64 Stack size/offset = 48 */
#else
                              NdrFcShort( 0x28 ), /* axp64 Stack size/offset = 40 */
#endif
/* 174 */ 0x8,                /* FC_LONG */
                              0x0,                /* 0 */

          /* Procedure OrderStatus */

/* 176 */ 0x33,               /* FC_AUTO_HANDLE */
                              0x6c,               /* Old Flags:  object, Oi2 */
/* 178 */ NdrFcLong( 0x0 ),   /* 0 */
/* 182 */ NdrFcShort( 0x7 ),  /* 7 */
#ifndef _ALPHA_
/* 184 */ NdrFcShort( 0x38 ), /* ia64 Stack size/offset = 56 */
#else
                              NdrFcShort( 0x30 ), /* axp64 Stack size/offset = 48 */
#endif
/* 186 */ NdrFcShort( 0x0 ),  /* 0 */
/* 188 */ NdrFcShort( 0x8 ),  /* 8 */
/* 190 */ 0x47,               /* Oi2 Flags:  srv must size, clt must size, has return,
has ext, */
                              0x3,                /* 3 */
/* 192 */ 0xa,                /* 10 */
                              0x7,                /* Ext Flags:  new corr desc, clt corr
check, srv corr check, */
/* 194 */ NdrFcShort( 0x20 ), /* 32 */
/* 196 */ NdrFcShort( 0x20 ), /* 32 */
/* 198 */ NdrFcShort( 0x0 ),  /* 0 */
/* 200 */ NdrFcShort( 0x0 ),  /* 0 */

          /* Parameter txn_in */

/* 202 */ NdrFcShort( 0x8b ), /* Flags:  must size, must free, in, by val, */
#ifndef _ALPHA_
/* 204 */ NdrFcShort( 0x10 ), /* ia64 Stack size/offset = 16 */
#else
                              NdrFcShort( 0x8 ),  /* axp64 Stack size/offset = 8 */
#endif
/* 206 */ NdrFcShort( 0x3b6 ),          /* Type Offset=950 */

          /* Parameter txn_out */

/* 208 */ NdrFcShort( 0x6113 ),         /* Flags:  must size, must free, out, simple ref,
srv alloc size=24 */
#ifndef _ALPHA_
/* 210 */ NdrFcShort( 0x28 ), /* ia64 Stack size/offset = 40 */
#else
                              NdrFcShort( 0x20 ), /* axp64 Stack size/offset = 32 */
#endif
/* 212 */ NdrFcShort( 0x3c8 ),          /* Type Offset=968 */

          /* Return value */

/* 214 */ NdrFcShort( 0x70 ), /* Flags:  out, return, base type, */
#ifndef _ALPHA_
/* 216 */ NdrFcShort( 0x30 ), /* ia64 Stack size/offset = 48 */
#else
                              NdrFcShort( 0x28 ), /* axp64 Stack size/offset = 40 */
#endif
/* 218 */ 0x8,                /* FC_LONG */
                              0x0,                /* 0 */

          /* Procedure CallSetComplete */

/* 220 */ 0x33,               /* FC_AUTO_HANDLE */
                              0x6c,               /* Old Flags:  object, Oi2 */
/* 222 */ NdrFcLong( 0x0 ),   /* 0 */
/* 226 */ NdrFcShort( 0x8 ),  /* 8 */
/* 228 */ NdrFcShort( 0x10 ), /* ia64, axp64 Stack size/offset = 16 */
/* 230 */ NdrFcShort( 0x0 ),  /* 0 */
/* 232 */ NdrFcShort( 0x8 ),  /* 8 */
/* 234 */ 0x44,               /* Oi2 Flags:  has return, has ext, */
                              0x1,                /* 1 */
/* 236 */ 0xa,                /* 10 */
                              0x1,                /* Ext Flags:  new corr desc, */
/* 238 */ NdrFcShort( 0x0 ),  /* 0 */
/* 240 */ NdrFcShort( 0x0 ),  /* 0 */
/* 242 */ NdrFcShort( 0x0 ),  /* 0 */
/* 244 */ NdrFcShort( 0x0 ),  /* 0 */

          /* Return value */

/* 246 */ NdrFcShort( 0x70 ), /* Flags:  out, return, base type, */
/* 248 */ NdrFcShort( 0x8 ),  /* ia64, axp64 Stack size/offset = 8 */
/* 250 */ 0x8,                /* FC_LONG */
                              0x0,                /* 0 */

                              0x0
        }
    };

static const MIDL_TYPE_FORMAT_STRING __MIDL_TypeFormatString =
    {
        0,
        {
                              NdrFcShort( 0x0 ),  /* 0 */
/*  2 */
                              0x12, 0x0,          /* FC_UP */
/*  4 */  NdrFcShort( 0x39e ),          /* Offset= 926 (930) */
/*  6 */
                              0x2b,               /* FC_NON_ENCAPSULATED_UNION */
                              0x9,                /* FC_ULONG */
/*  8 */  0x7,                /* Corr desc: FC_USHORT */
                              0x0,                /*  */
/* 10 */  NdrFcShort( 0xfff8 ),         /* -8 */
/* 12 */  NdrFcShort( 0x1 ),  /* Corr flags:  early, */
/* 14 */  NdrFcShort( 0x2 ),  /* Offset= 2 (16) */
/* 16 */  NdrFcShort( 0x10 ), /* 16 */
/* 18 */  NdrFcShort( 0x2b ), /* 43 */
/* 20 */  NdrFcLong( 0x3 ),   /* 3 */
/* 24 */  NdrFcShort( 0x8008 ),         /* Simple arm type: FC_LONG */
/* 26 */  NdrFcLong( 0x11 ),  /* 17 */
/* 30 */  NdrFcShort( 0x8001 ),         /* Simple arm type: FC_BYTE */
/* 32 */  NdrFcLong( 0x2 ),   /* 2 */
/* 36 */  NdrFcShort( 0x8006 ),         /* Simple arm type: FC_SHORT */
/* 38 */  NdrFcLong( 0x4 ),   /* 4 */
/* 42 */  NdrFcShort( 0x800a ),         /* Simple arm type: FC_FLOAT */
/* 44 */  NdrFcLong( 0x5 ),   /* 5 */
```


Copyright Dell

```
/* 48 */  NdrFcShort( 0x800c ),         /* Simple arm type: FC_DOUBLE */
/* 50 */  NdrFcLong( 0xb ),   /* 11 */
/* 54 */  NdrFcShort( 0x8006 ),         /* Simple arm type: FC_SHORT */
/* 56 */  NdrFcLong( 0xa ),   /* 10 */
/* 60 */  NdrFcShort( 0x8008 ),         /* Simple arm type: FC_LONG */
/* 62 */  NdrFcLong( 0x6 ),   /* 6 */
/* 66 */  NdrFcShort( 0xd6 ), /* Offset= 214 (280) */
/* 68 */  NdrFcLong( 0x7 ),   /* 7 */
/* 72 */  NdrFcShort( 0x800c ),         /* Simple arm type: FC_DOUBLE */
/* 74 */  NdrFcLong( 0x8 ),   /* 8 */
/* 78 */  NdrFcShort( 0xd0 ), /* Offset= 208 (286) */
/* 80 */  NdrFcLong( 0xd ),   /* 13 */
/* 84 */  NdrFcShort( 0xe4 ), /* Offset= 228 (312) */
/* 86 */  NdrFcLong( 0x9 ),   /* 9 */
/* 90 */  NdrFcShort( 0xf0 ), /* Offset= 240 (330) */
/* 92 */  NdrFcLong( 0x2000 ),          /* 8192 */
/* 96 */  NdrFcShort( 0xfc ), /* Offset= 252 (348) */
/* 98 */  NdrFcLong( 0x24 ),  /* 36 */
/* 102 */ NdrFcShort( 0x2f4 ),          /* Offset= 756 (858) */
/* 104 */ NdrFcLong( 0x4024 ),          /* 16420 */
/* 108 */ NdrFcShort( 0x2ee ),          /* Offset= 750 (858) */
/* 110 */ NdrFcLong( 0x4011 ),          /* 16401 */
/* 114 */ NdrFcShort( 0x2ec ),          /* Offset= 748 (862) */
/* 116 */ NdrFcLong( 0x4002 ),          /* 16386 */
/* 120 */ NdrFcShort( 0x2ea ),          /* Offset= 746 (866) */
/* 122 */ NdrFcLong( 0x4003 ),          /* 16387 */
/* 126 */ NdrFcShort( 0x2e8 ),          /* Offset= 744 (870) */
/* 128 */ NdrFcLong( 0x4004 ),          /* 16388 */
/* 132 */ NdrFcShort( 0x2e6 ),          /* Offset= 742 (874) */
/* 134 */ NdrFcLong( 0x4005 ),          /* 16389 */
/* 138 */ NdrFcShort( 0x2e4 ),          /* Offset= 740 (878) */
/* 140 */ NdrFcLong( 0x400b ),          /* 16395 */
/* 144 */ NdrFcShort( 0x2d2 ),          /* Offset= 722 (866) */
/* 146 */ NdrFcLong( 0x400a ),          /* 16394 */
/* 150 */ NdrFcShort( 0x2d0 ),          /* Offset= 720 (870) */
/* 152 */ NdrFcLong( 0x4006 ),          /* 16390 */
/* 156 */ NdrFcShort( 0x2d6 ),          /* Offset= 726 (882) */
/* 158 */ NdrFcLong( 0x4007 ),          /* 16391 */
/* 162 */ NdrFcShort( 0x2cc ),          /* Offset= 716 (878) */
/* 164 */ NdrFcLong( 0x4008 ),          /* 16392 */
/* 168 */ NdrFcShort( 0x2ce ),          /* Offset= 718 (886) */
/* 170 */ NdrFcLong( 0x400d ),          /* 16397 */
/* 174 */ NdrFcShort( 0x2cc ),          /* Offset= 716 (890) */
/* 176 */ NdrFcLong( 0x4009 ),          /* 16393 */
/* 180 */ NdrFcShort( 0x2ca ),          /* Offset= 714 (894) */
/* 182 */ NdrFcLong( 0x6000 ),          /* 24576 */
/* 186 */ NdrFcShort( 0x2c8 ),          /* Offset= 712 (898) */
/* 188 */ NdrFcLong( 0x400c ),          /* 16396 */
/* 192 */ NdrFcShort( 0x2c6 ),          /* Offset= 710 (902) */
/* 194 */ NdrFcLong( 0x10 ),  /* 16 */
/* 198 */ NdrFcShort( 0x8002 ),         /* Simple arm type: FC_CHAR */
/* 200 */ NdrFcLong( 0x12 ),  /* 18 */
/* 204 */ NdrFcShort( 0x8006 ),         /* Simple arm type: FC_SHORT */
/* 206 */ NdrFcLong( 0x13 ),  /* 19 */
/* 210 */ NdrFcShort( 0x8008 ),         /* Simple arm type: FC_LONG */
/* 212 */ NdrFcLong( 0x16 ),  /* 22 */
/* 216 */ NdrFcShort( 0x8008 ),         /* Simple arm type: FC_LONG */
/* 218 */ NdrFcLong( 0x17 ),  /* 23 */
/* 222 */ NdrFcShort( 0x8008 ),         /* Simple arm type: FC_LONG */
/* 224 */ NdrFcLong( 0xe ),   /* 14 */
/* 228 */ NdrFcShort( 0x2aa ),          /* Offset= 682 (910) */
/* 230 */ NdrFcLong( 0x400e ),          /* 16398 */
/* 234 */ NdrFcShort( 0x2b0 ),          /* Offset= 688 (922) */
/* 236 */ NdrFcLong( 0x4010 ),          /* 16400 */
/* 240 */ NdrFcShort( 0x2ae ),          /* Offset= 686 (926) */
/* 242 */ NdrFcLong( 0x4012 ),          /* 16402 */
/* 246 */ NdrFcShort( 0x26c ),          /* Offset= 620 (866) */
/* 248 */ NdrFcLong( 0x4013 ),          /* 16403 */
/* 252 */ NdrFcShort( 0x26a ),          /* Offset= 618 (870) */
/* 254 */ NdrFcLong( 0x4016 ),          /* 16406 */
/* 258 */ NdrFcShort( 0x264 ),          /* Offset= 612 (870) */
/* 260 */ NdrFcLong( 0x4017 ),          /* 16407 */
/* 264 */ NdrFcShort( 0x25e ),          /* Offset= 606 (870) */
/* 266 */ NdrFcLong( 0x0 ),   /* 0 */
/* 270 */ NdrFcShort( 0x0 ),  /* Offset= 0 (270) */
/* 272 */ NdrFcLong( 0x1 ),   /* 1 */
/* 276 */ NdrFcShort( 0x0 ),  /* Offset= 0 (276) */
/* 278 */ NdrFcShort( 0xffffffff ),     /* Offset= -1 (277) */
/* 280 */
                                0x15,               /* FC_STRUCT */
                                0x7,                /* 7 */
/* 282 */ NdrFcShort( 0x8 ),  /* 8 */
/* 284 */ 0xb,                 /* FC_HYPER */
                                0x5b,               /* FC_END */
/* 286 */
                                0x12, 0x0,          /* FC_UP */
/* 288 */ NdrFcShort( 0xe ),  /* Offset= 14 (302) */
/* 290 */
                                0x1b,               /* FC_CARRAY */
                                0x1,                /* 1 */
/* 292 */ NdrFcShort( 0x2 ),  /* 2 */
/* 294 */ 0x9,                 /* Corr desc: FC_ULONG */
                                0x0,                /*  */
/* 296 */ NdrFcShort( 0xfffc ),         /* -4 */
/* 298 */ NdrFcShort( 0x1 ),  /* Corr flags:  early, */
/* 300 */ 0x6,                 /* FC_SHORT */
                                0x5b,               /* FC_END */
/* 302 */
                                0x17,               /* FC_CSTRUCT */
                                0x3,                /* 3 */
/* 304 */ NdrFcShort( 0x8 ),  /* 8 */
/* 306 */ NdrFcShort( 0xfffffff0 ),     /* Offset= -16 (290) */
/* 308 */ 0x8,                 /* FC_LONG */
                                0x8,                /* FC_LONG */
/* 310 */ 0x5c,                /* FC_PAD */
                                0x5b,               /* FC_END */
/* 312 */
                                0x2f,               /* FC_IP */
                                0x5a,               /* FC_CONSTANT_IID */
/* 314 */ NdrFcLong( 0x0 ),   /* 0 */
/* 318 */ NdrFcShort( 0x0 ),  /* 0 */
/* 320 */ NdrFcShort( 0x0 ),  /* 0 */
/* 322 */ 0xc0,                /* 192 */
                                0x0,                /* 0 */
/* 324 */ 0x0,                 /* 0 */
                                0x0,                /* 0 */
/* 326 */ 0x0,                 /* 0 */
                                0x0,                /* 0 */
/* 328 */ 0x0,                 /* 0 */
                                0x46,               /* 70 */
/* 330 */
                                0x2f,               /* FC_IP */
                                0x5a,               /* FC_CONSTANT_IID */
/* 332 */ NdrFcLong( 0x20400 ),         /* 132096 */
/* 336 */ NdrFcShort( 0x0 ),  /* 0 */
/* 338 */ NdrFcShort( 0x0 ),  /* 0 */
```


Copyright Dell

```
/* 340 */ 0xc0,              /* 192 */
                             0x0,              /* 0 */
/* 342 */ 0x0,               /* 0 */
                             0x0,              /* 0 */
/* 344 */ 0x0,               /* 0 */
                             0x0,              /* 0 */
/* 346 */ 0x0,               /* 0 */
                             0x46,             /* 70 */
/* 348 */
                             0x12, 0x10,       /* FC_UP [pointer_deref] */
/* 350 */ NdrFcShort( 0x2 ),  /* Offset= 2 (352) */
/* 352 */
                             0x12, 0x0,        /* FC_UP */
/* 354 */ NdrFcShort( 0x1e6 ),         /* Offset= 486 (840) */
/* 356 */
                             0x2a,             /* FC_ENCAPSULATED_UNION */
                             0x89,             /* 137 */
/* 358 */ NdrFcShort( 0x20 ), /* 32 */
/* 360 */ NdrFcShort( 0xa ),  /* 10 */
/* 362 */ NdrFcLong( 0x8 ),   /* 8 */
/* 366 */ NdrFcShort( 0x50 ), /* Offset= 80 (446) */
/* 368 */ NdrFcLong( 0xd ),   /* 13 */
/* 372 */ NdrFcShort( 0x70 ), /* Offset= 112 (484) */
/* 374 */ NdrFcLong( 0x9 ),   /* 9 */
/* 378 */ NdrFcShort( 0x90 ), /* Offset= 144 (522) */
/* 380 */ NdrFcLong( 0xc ),   /* 12 */
/* 384 */ NdrFcShort( 0xb0 ), /* Offset= 176 (560) */
/* 386 */ NdrFcLong( 0x24 ),  /* 36 */
/* 390 */ NdrFcShort( 0x104 ),         /* Offset= 260 (650) */
/* 392 */ NdrFcLong( 0x800d ),         /* 32781 */
/* 396 */ NdrFcShort( 0x120 ),         /* Offset= 288 (684) */
/* 398 */ NdrFcLong( 0x10 ),  /* 16 */
/* 402 */ NdrFcShort( 0x13a ),         /* Offset= 314 (716) */
/* 404 */ NdrFcLong( 0x2 ),   /* 2 */
/* 408 */ NdrFcShort( 0x150 ),         /* Offset= 336 (744) */
/* 410 */ NdrFcLong( 0x3 ),   /* 3 */
/* 414 */ NdrFcShort( 0x166 ),         /* Offset= 358 (772) */
/* 416 */ NdrFcLong( 0x14 ),  /* 20 */
/* 420 */ NdrFcShort( 0x17c ),         /* Offset= 380 (800) */
/* 422 */ NdrFcShort( 0xffffffff ),    /* Offset= -1 (421) */
/* 424 */
                             0x21,             /* FC_BOGUS_ARRAY */
                             0x3,              /* 3 */
/* 426 */ NdrFcShort( 0x0 ),  /* 0 */
/* 428 */ 0x19,               /* Corr desc:  field pointer, FC_ULONG */
                             0x0,              /*  */
/* 430 */ NdrFcShort( 0x0 ),  /* 0 */
/* 432 */ NdrFcShort( 0x1 ),  /* Corr flags:  early, */
/* 434 */ NdrFcLong( 0xffffffff ),     /* -1 */
/* 438 */ NdrFcShort( 0x0 ),  /* Corr flags:  */
/* 440 */
                             0x12, 0x0,        /* FC_UP */
/* 442 */ NdrFcShort( 0xffffff74 ),    /* Offset= -140 (302) */
/* 444 */ 0x5c,               /* FC_PAD */
                             0x5b,             /* FC_END */
/* 446 */
                             0x1a,             /* FC_BOGUS_STRUCT */
                             0x3,              /* 3 */
/* 448 */ NdrFcShort( 0x10 ), /* 16 */
/* 450 */ NdrFcShort( 0x0 ),  /* 0 */
/* 452 */ NdrFcShort( 0x6 ),  /* Offset= 6 (458) */
/* 454 */ 0x8,                /* FC_LONG */
                             0x39,             /* FC_ALIGNM8 */
/* 456 */ 0x36,               /* FC_POINTER */
                             0x5b,             /* FC_END */
/* 458 */
                             0x11, 0x0,        /* FC_RP */
/* 460 */ NdrFcShort( 0xffffffdc ),    /* Offset= -36 (424) */
/* 462 */
                             0x21,             /* FC_BOGUS_ARRAY */
                             0x3,              /* 3 */
/* 464 */ NdrFcShort( 0x0 ),  /* 0 */
/* 466 */ 0x19,               /* Corr desc:  field pointer, FC_ULONG */
                             0x0,              /*  */
/* 468 */ NdrFcShort( 0x0 ),  /* 0 */
/* 470 */ NdrFcShort( 0x1 ),  /* Corr flags:  early, */
/* 472 */ NdrFcLong( 0xffffffff ),     /* -1 */
/* 476 */ NdrFcShort( 0x0 ),  /* Corr flags:  */
/* 478 */ 0x4c,               /* FC_EMBEDDED_COMPLEX */
                             0x0,              /* 0 */
/* 480 */ NdrFcShort( 0xffffff58 ),    /* Offset= -168 (312) */
/* 482 */ 0x5c,               /* FC_PAD */
                             0x5b,             /* FC_END */
/* 484 */
                             0x1a,             /* FC_BOGUS_STRUCT */
                             0x3,              /* 3 */
/* 486 */ NdrFcShort( 0x10 ), /* 16 */
/* 488 */ NdrFcShort( 0x0 ),  /* 0 */
/* 490 */ NdrFcShort( 0x6 ),  /* Offset= 6 (496) */
/* 492 */ 0x8,                /* FC_LONG */
                             0x39,             /* FC_ALIGNM8 */
/* 494 */ 0x36,               /* FC_POINTER */
                             0x5b,             /* FC_END */
/* 496 */
                             0x11, 0x0,        /* FC_RP */
/* 498 */ NdrFcShort( 0xffffffdc ),    /* Offset= -36 (462) */
/* 500 */
                             0x21,             /* FC_BOGUS_ARRAY */
                             0x3,              /* 3 */
/* 502 */ NdrFcShort( 0x0 ),  /* 0 */
/* 504 */ 0x19,               /* Corr desc:  field pointer, FC_ULONG */
                             0x0,              /*  */
/* 506 */ NdrFcShort( 0x0 ),  /* 0 */
/* 508 */ NdrFcShort( 0x1 ),  /* Corr flags:  early, */
/* 510 */ NdrFcLong( 0xffffffff ),     /* -1 */
/* 514 */ NdrFcShort( 0x0 ),  /* Corr flags:  */
/* 516 */ 0x4c,               /* FC_EMBEDDED_COMPLEX */
                             0x0,              /* 0 */
/* 518 */ NdrFcShort( 0xffffff44 ),    /* Offset= -188 (330) */
/* 520 */ 0x5c,               /* FC_PAD */
                             0x5b,             /* FC_END */
/* 522 */
                             0x1a,             /* FC_BOGUS_STRUCT */
                             0x3,              /* 3 */
/* 524 */ NdrFcShort( 0x10 ), /* 16 */
/* 526 */ NdrFcShort( 0x0 ),  /* 0 */
/* 528 */ NdrFcShort( 0x6 ),  /* Offset= 6 (534) */
/* 530 */ 0x8,                /* FC_LONG */
                             0x39,             /* FC_ALIGNM8 */
/* 532 */ 0x36,               /* FC_POINTER */
                             0x5b,             /* FC_END */
/* 534 */
                             0x11, 0x0,        /* FC_RP */
/* 536 */ NdrFcShort( 0xffffffdc ),    /* Offset= -36 (500) */
/* 538 */
                             0x21,             /* FC_BOGUS_ARRAY */
```


Copyright Dell

```
                                0x3,                /* 3 */
/* 540 */ NdrFcShort( 0x0 ),    /* 0 */
/* 542 */ 0x19,                 /* Corr desc:  field pointer, FC_ULONG */
                                0x0,                /*  */
/* 544 */ NdrFcShort( 0x0 ),    /* 0 */
/* 546 */ NdrFcShort( 0x1 ),    /* Corr flags:  early, */
/* 548 */ NdrFcLong( 0xffffffff ),      /* -1 */
/* 552 */ NdrFcShort( 0x0 ),    /* Corr flags:  */
/* 554 */
                                0x12, 0x0,          /* FC_UP */
/* 556 */ NdrFcShort( 0x176 ),          /* Offset= 374 (930) */
/* 558 */ 0x5c,                 /* FC_PAD */
                                0x5b,               /* FC_END */
/* 560 */
                                0x1a,               /* FC_BOGUS_STRUCT */
                                0x3,                /* 3 */
/* 562 */ NdrFcShort( 0x10 ), /* 16 */
/* 564 */ NdrFcShort( 0x0 ),    /* 0 */
/* 566 */ NdrFcShort( 0x6 ),    /* Offset= 6 (572) */
/* 568 */ 0x8,                  /* FC_LONG */
                                0x39,               /* FC_ALIGNM8 */
/* 570 */ 0x36,                 /* FC_POINTER */
                                0x5b,               /* FC_END */
/* 572 */
                                0x11, 0x0,          /* FC_RP */
/* 574 */ NdrFcShort( 0xffffffdc ),     /* Offset= -36 (538) */
/* 576 */
                                0x2f,               /* FC_IP */
                                0x5a,               /* FC_CONSTANT_IID */
/* 578 */ NdrFcLong( 0x2f ),    /* 47 */
/* 582 */ NdrFcShort( 0x0 ),    /* 0 */
/* 584 */ NdrFcShort( 0x0 ),    /* 0 */
/* 586 */ 0xc0,                 /* 192 */
                                0x0,                /* 0 */
/* 588 */ 0x0,                  /* 0 */
                                0x0,                /* 0 */
/* 590 */ 0x0,                  /* 0 */
                                0x0,                /* 0 */
/* 592 */ 0x0,                  /* 0 */
                                0x46,               /* 70 */
/* 594 */
                                0x1b,               /* FC_CARRAY */
                                0x0,                /* 0 */
/* 596 */ NdrFcShort( 0x1 ),    /* 1 */
/* 598 */ 0x19,                 /* Corr desc:  field pointer, FC_ULONG */
                                0x0,                /*  */
/* 600 */ NdrFcShort( 0x4 ),    /* 4 */
/* 602 */ NdrFcShort( 0x1 ),    /* Corr flags:  early, */
/* 604 */ 0x1,                  /* FC_BYTE */
                                0x5b,               /* FC_END */
/* 606 */
                                0x1a,               /* FC_BOGUS_STRUCT */
                                0x3,                /* 3 */
/* 608 */ NdrFcShort( 0x18 ), /* 24 */
/* 610 */ NdrFcShort( 0x0 ),    /* 0 */
/* 612 */ NdrFcShort( 0xc ),    /* Offset= 12 (624) */
/* 614 */ 0x8,                  /* FC_LONG */
                                0x8,                /* FC_LONG */
/* 616 */ 0x4c,                 /* FC_EMBEDDED_COMPLEX */
                                0x0,                /* 0 */
/* 618 */ NdrFcShort( 0xffffffd6 ),     /* Offset= -42 (576) */
/* 620 */ 0x39,                 /* FC_ALIGNM8 */
                                0x36,               /* FC_POINTER */
/* 622 */ 0x5c,                 /* FC_PAD */
                                0x5b,               /* FC_END */
/* 624 */
                                0x12, 0x0,          /* FC_UP */
/* 626 */ NdrFcShort( 0xffffffe0 ),     /* Offset= -32 (594) */
/* 628 */
                                0x21,               /* FC_BOGUS_ARRAY */
                                0x3,                /* 3 */
/* 630 */ NdrFcShort( 0x0 ),    /* 0 */
/* 632 */ 0x19,                 /* Corr desc:  field pointer, FC_ULONG */
                                0x0,                /*  */
/* 634 */ NdrFcShort( 0x0 ),    /* 0 */
/* 636 */ NdrFcShort( 0x1 ),    /* Corr flags:  early, */
/* 638 */ NdrFcLong( 0xffffffff ),      /* -1 */
/* 642 */ NdrFcShort( 0x0 ),    /* Corr flags:  */
/* 644 */
                                0x12, 0x0,          /* FC_UP */
/* 646 */ NdrFcShort( 0xffffffd8 ),     /* Offset= -40 (606) */
/* 648 */ 0x5c,                 /* FC_PAD */
                                0x5b,               /* FC_END */
/* 650 */
                                0x1a,               /* FC_BOGUS_STRUCT */
                                0x3,                /* 3 */
/* 652 */ NdrFcShort( 0x10 ), /* 16 */
/* 654 */ NdrFcShort( 0x0 ),    /* 0 */
/* 656 */ NdrFcShort( 0x6 ),    /* Offset= 6 (662) */
/* 658 */ 0x8,                  /* FC_LONG */
                                0x39,               /* FC_ALIGNM8 */
/* 660 */ 0x36,                 /* FC_POINTER */
                                0x5b,               /* FC_END */
/* 662 */
                                0x11, 0x0,          /* FC_RP */
/* 664 */ NdrFcShort( 0xffffffdc ),     /* Offset= -36 (628) */
/* 666 */
                                0x1d,               /* FC_SMFARRAY */
                                0x0,                /* 0 */
/* 668 */ NdrFcShort( 0x8 ),    /* 8 */
/* 670 */ 0x2,                  /* FC_CHAR */
                                0x5b,               /* FC_END */
/* 672 */
                                0x15,               /* FC_STRUCT */
                                0x3,                /* 3 */
/* 674 */ NdrFcShort( 0x10 ), /* 16 */
/* 676 */ 0x8,                  /* FC_LONG */
                                0x6,                /* FC_SHORT */
/* 678 */ 0x6,                  /* FC_SHORT */
                                0x4c,               /* FC_EMBEDDED_COMPLEX */
/* 680 */ 0x0,                  /* 0 */
                                NdrFcShort( 0xfffffff1 ),     /* Offset= -15 (666) */
                                0x5b,               /* FC_END */
/* 684 */
                                0x1a,               /* FC_BOGUS_STRUCT */
                                0x3,                /* 3 */
/* 686 */ NdrFcShort( 0x20 ), /* 32 */
/* 688 */ NdrFcShort( 0x0 ),    /* 0 */
/* 690 */ NdrFcShort( 0xa ),    /* Offset= 10 (700) */
/* 692 */ 0x8,                  /* FC_LONG */
                                0x39,               /* FC_ALIGNM8 */
/* 694 */ 0x36,                 /* FC_POINTER */
                                0x4c,               /* FC_EMBEDDED_COMPLEX */
/* 696 */ 0x0,                  /* 0 */
                                NdrFcShort( 0xffffffe7 ),     /* Offset= -25 (672) */
                                0x5b,               /* FC_END */
```

```
/* 700 */
                                0x11, 0x0,          /* FC_RP */
/* 702 */ NdrFcShort( 0xffffff10 ),     /* Offset= -240 (462) */
/* 704 */
                                0x1b,               /* FC_CARRAY */
                                0x0,                /* 0 */
/* 706 */ NdrFcShort( 0x1 ),  /* 1 */
/* 708 */ 0x19,               /* Corr desc:  field pointer, FC_ULONG */
                                0x0,                /*  */
/* 710 */ NdrFcShort( 0x0 ),  /* 0 */
/* 712 */ NdrFcShort( 0x1 ),  /* Corr flags:  early, */
/* 714 */ 0x1,                /* FC_BYTE */
                                0x5b,               /* FC_END */
/* 716 */
                                0x1a,               /* FC_BOGUS_STRUCT */
                                0x3,                /* 3 */
/* 718 */ NdrFcShort( 0x10 ), /* 16 */
/* 720 */ NdrFcShort( 0x0 ),  /* 0 */
/* 722 */ NdrFcShort( 0x6 ),  /* Offset= 6 (728) */
/* 724 */ 0x8,                /* FC_LONG */
                                0x39,               /* FC_ALIGNM8 */
/* 726 */ 0x36,               /* FC_POINTER */
                                0x5b,               /* FC_END */
/* 728 */
                                0x12, 0x0,          /* FC_UP */
/* 730 */ NdrFcShort( 0xffffffe6 ),     /* Offset= -26 (704) */
/* 732 */
                                0x1b,               /* FC_CARRAY */
                                0x1,                /* 1 */
/* 734 */ NdrFcShort( 0x2 ),  /* 2 */
/* 736 */ 0x19,               /* Corr desc:  field pointer, FC_ULONG */
                                0x0,                /*  */
/* 738 */ NdrFcShort( 0x0 ),  /* 0 */
/* 740 */ NdrFcShort( 0x1 ),  /* Corr flags:  early, */
/* 742 */ 0x6,                /* FC_SHORT */
                                0x5b,               /* FC_END */
/* 744 */
                                0x1a,               /* FC_BOGUS_STRUCT */
                                0x3,                /* 3 */
/* 746 */ NdrFcShort( 0x10 ), /* 16 */
/* 748 */ NdrFcShort( 0x0 ),  /* 0 */
/* 750 */ NdrFcShort( 0x6 ),  /* Offset= 6 (756) */
/* 752 */ 0x8,                /* FC_LONG */
                                0x39,               /* FC_ALIGNM8 */
/* 754 */ 0x36,               /* FC_POINTER */
                                0x5b,               /* FC_END */
/* 756 */
                                0x12, 0x0,          /* FC_UP */
/* 758 */ NdrFcShort( 0xffffffe6 ),     /* Offset= -26 (732) */
/* 760 */
                                0x1b,               /* FC_CARRAY */
                                0x3,                /* 3 */
/* 762 */ NdrFcShort( 0x4 ),  /* 4 */
/* 764 */ 0x19,               /* Corr desc:  field pointer, FC_ULONG */
                                0x0,                /*  */
/* 766 */ NdrFcShort( 0x0 ),  /* 0 */
/* 768 */ NdrFcShort( 0x1 ),  /* Corr flags:  early, */
/* 770 */ 0x8,                /* FC_LONG */
                                0x5b,               /* FC_END */
/* 772 */
                                0x1a,               /* FC_BOGUS_STRUCT */
                                0x3,                /* 3 */
/* 774 */ NdrFcShort( 0x10 ), /* 16 */
/* 776 */ NdrFcShort( 0x0 ),  /* 0 */
/* 778 */ NdrFcShort( 0x6 ),  /* Offset= 6 (784) */
/* 780 */ 0x8,                /* FC_LONG */
                                0x39,               /* FC_ALIGNM8 */
/* 782 */ 0x36,               /* FC_POINTER */
                                0x5b,               /* FC_END */
/* 784 */
                                0x12, 0x0,          /* FC_UP */
/* 786 */ NdrFcShort( 0xffffffe6 ),     /* Offset= -26 (760) */
/* 788 */
                                0x1b,               /* FC_CARRAY */
                                0x7,                /* 7 */
/* 790 */ NdrFcShort( 0x8 ),  /* 8 */
/* 792 */ 0x19,               /* Corr desc:  field pointer, FC_ULONG */
                                0x0,                /*  */
/* 794 */ NdrFcShort( 0x0 ),  /* 0 */
/* 796 */ NdrFcShort( 0x1 ),  /* Corr flags:  early, */
/* 798 */ 0xb,                /* FC_HYPER */
                                0x5b,               /* FC_END */
/* 800 */
                                0x1a,               /* FC_BOGUS_STRUCT */
                                0x3,                /* 3 */
/* 802 */ NdrFcShort( 0x10 ), /* 16 */
/* 804 */ NdrFcShort( 0x0 ),  /* 0 */
/* 806 */ NdrFcShort( 0x6 ),  /* Offset= 6 (812) */
/* 808 */ 0x8,                /* FC_LONG */
                                0x39,               /* FC_ALIGNM8 */
/* 810 */ 0x36,               /* FC_POINTER */
                                0x5b,               /* FC_END */
/* 812 */
                                0x12, 0x0,          /* FC_UP */
/* 814 */ NdrFcShort( 0xffffffe6 ),     /* Offset= -26 (788) */
/* 816 */
                                0x15,               /* FC_STRUCT */
                                0x3,                /* 3 */
/* 818 */ NdrFcShort( 0x8 ),  /* 8 */
/* 820 */ 0x8,                /* FC_LONG */
                                0x8,                /* FC_LONG */
/* 822 */ 0x5c,               /* FC_PAD */
                                0x5b,               /* FC_END */
/* 824 */
                                0x1b,               /* FC_CARRAY */
                                0x3,                /* 3 */
/* 826 */ NdrFcShort( 0x8 ),  /* 8 */
/* 828 */ 0x7,                /* Corr desc: FC_USHORT */
                                0x0,                /*  */
/* 830 */ NdrFcShort( 0xffc8 ),         /* -56 */
/* 832 */ NdrFcShort( 0x1 ),  /* Corr flags:  early, */
/* 834 */ 0x4c,               /* FC_EMBEDDED_COMPLEX */
                                0x0,                /* 0 */
/* 836 */ NdrFcShort( 0xffffffec ),     /* Offset= -20 (816) */
/* 838 */ 0x5c,               /* FC_PAD */
                                0x5b,               /* FC_END */
/* 840 */
                                0x1a,               /* FC_BOGUS_STRUCT */
                                0x3,                /* 3 */
/* 842 */ NdrFcShort( 0x38 ), /* 56 */
/* 844 */ NdrFcShort( 0xffffffec ),     /* Offset= -20 (824) */
/* 846 */ NdrFcShort( 0x0 ),  /* Offset= 0 (846) */
/* 848 */ 0x6,                /* FC_SHORT */
                                0x6,                /* FC_SHORT */
/* 850 */ 0x38,               /* FC_ALIGNM4 */
                                0x8,                /* FC_LONG */
```

```
/* 852 */ 0x8,                /* FC_LONG */
                              0x4c,              /* FC_EMBEDDED_COMPLEX */
/* 854 */ 0x4,                /* 4 */
                              NdrFcShort( 0xfffffe0d ),     /* Offset= -499 (356) */
                              0x5b,              /* FC_END */
/* 858 */
                              0x12, 0x0,         /* FC_UP */
/* 860 */ NdrFcShort( 0xffffff02 ),     /* Offset= -254 (606) */
/* 862 */
                              0x12, 0x8,         /* FC_UP [simple_pointer] */
/* 864 */ 0x1,                /* FC_BYTE */
                              0x5c,              /* FC_PAD */
/* 866 */
                              0x12, 0x8,         /* FC_UP [simple_pointer] */
/* 868 */ 0x6,                /* FC_SHORT */
                              0x5c,              /* FC_PAD */
/* 870 */
                              0x12, 0x8,         /* FC_UP [simple_pointer] */
/* 872 */ 0x8,                /* FC_LONG */
                              0x5c,              /* FC_PAD */
/* 874 */
                              0x12, 0x8,         /* FC_UP [simple_pointer] */
/* 876 */ 0xa,                /* FC_FLOAT */
                              0x5c,              /* FC_PAD */
/* 878 */
                              0x12, 0x8,         /* FC_UP [simple_pointer] */
/* 880 */ 0xc,                /* FC_DOUBLE */
                              0x5c,              /* FC_PAD */
/* 882 */
                              0x12, 0x0,         /* FC_UP */
/* 884 */ NdrFcShort( 0xfffffda4 ),     /* Offset= -604 (280) */
/* 886 */
                              0x12, 0x10,        /* FC_UP [pointer_deref] */
/* 888 */ NdrFcShort( 0xfffffda6 ),     /* Offset= -602 (286) */
/* 890 */
                              0x12, 0x10,        /* FC_UP [pointer_deref] */
/* 892 */ NdrFcShort( 0xfffffdbc ),     /* Offset= -580 (312) */
/* 894 */
                              0x12, 0x10,        /* FC_UP [pointer_deref] */
/* 896 */ NdrFcShort( 0xfffffdca ),     /* Offset= -566 (330) */
/* 898 */
                              0x12, 0x10,        /* FC_UP [pointer_deref] */
/* 900 */ NdrFcShort( 0xfffffdd8 ),     /* Offset= -552 (348) */
/* 902 */
                              0x12, 0x10,        /* FC_UP [pointer_deref] */
/* 904 */ NdrFcShort( 0x2 ),  /* Offset= 2 (906) */
/* 906 */
                              0x12, 0x0,         /* FC_UP */
/* 908 */ NdrFcShort( 0x16 ), /* Offset= 22 (930) */
/* 910 */
                              0x15,              /* FC_STRUCT */
                              0x7,               /* 7 */
/* 912 */ NdrFcShort( 0x10 ), /* 16 */
/* 914 */ 0x6,                /* FC_SHORT */
                              0x1,               /* FC_BYTE */
/* 916 */ 0x1,                /* FC_BYTE */
                              0x38,              /* FC_ALIGNM4 */
/* 918 */ 0x8,                /* FC_LONG */
                              0x39,              /* FC_ALIGNM8 */
/* 920 */ 0xb,                /* FC_HYPER */
                              0x5b,              /* FC_END */
/* 922 */
                              0x12, 0x0,         /* FC_UP */
/* 924 */ NdrFcShort( 0xfffffff2 ),     /* Offset= -14 (910) */
/* 926 */
                              0x12, 0x8,         /* FC_UP [simple_pointer] */
/* 928 */ 0x2,                /* FC_CHAR */
                              0x5c,              /* FC_PAD */
/* 930 */
                              0x1a,              /* FC_BOGUS_STRUCT */
                              0x7,               /* 7 */
/* 932 */ NdrFcShort( 0x20 ), /* 32 */
/* 934 */ NdrFcShort( 0x0 ),  /* 0 */
/* 936 */ NdrFcShort( 0x0 ),  /* Offset= 0 (936) */
/* 938 */ 0x8,                /* FC_LONG */
                              0x8,               /* FC_LONG */
/* 940 */ 0x6,                /* FC_SHORT */
                              0x6,               /* FC_SHORT */
/* 942 */ 0x6,                /* FC_SHORT */
                              0x6,               /* FC_SHORT */
/* 944 */ 0x4c,               /* FC_EMBEDDED_COMPLEX */
                              0x0,               /* 0 */
/* 946 */ NdrFcShort( 0xfffffc54 ),     /* Offset= -940 (6) */
/* 948 */ 0x5c,               /* FC_PAD */
                              0x5b,              /* FC_END */
/* 950 */ 0xb4,               /* FC_USER_MARSHAL */
                              0x83,              /* 131 */
/* 952 */ NdrFcShort( 0x0 ),  /* 0 */
/* 954 */ NdrFcShort( 0x18 ), /* 24 */
/* 956 */ NdrFcShort( 0x0 ),  /* 0 */
/* 958 */ NdrFcShort( 0xfffffc44 ),     /* Offset= -956 (2) */
/* 960 */
                              0x11, 0x4,         /* FC_RP [alloced_on_stack] */
/* 962 */ NdrFcShort( 0x6 ),  /* Offset= 6 (968) */
/* 964 */
                              0x13, 0x0,         /* FC_OP */
/* 966 */ NdrFcShort( 0xfffffffdc ),     /* Offset= -36 (930) */
/* 968 */ 0xb4,               /* FC_USER_MARSHAL */
                              0x83,              /* 131 */
/* 970 */ NdrFcShort( 0x0 ),  /* 0 */
/* 972 */ NdrFcShort( 0x18 ), /* 24 */
/* 974 */ NdrFcShort( 0x0 ),  /* 0 */
/* 976 */ NdrFcShort( 0xfffffff4 ),     /* Offset= -12 (964) */

                              0x0
        }
    };

const CInterfaceProxyVtbl * _tpcc_com_ps_ProxyVtblList[] =
{
    ( CInterfaceProxyVtbl *) &_ITPCCProxyVtbl,
    0
};

const CInterfaceStubVtbl * _tpcc_com_ps_StubVtblList[] =
{
    ( CInterfaceStubVtbl *) &_ITPCCStubVtbl,
    0
};

PCInterfaceName const _tpcc_com_ps_InterfaceNamesList[] =
{
    "ITPCC",
    0
};
```

```
#define _tpcc_com_ps_CHECK_IID(n)       IID_GENERIC_CHECK_IID( _tpcc_com_ps, pIID, n)

int __stdcall _tpcc_com_ps_IID_Lookup( const IID * pIID, int * pIndex )
{

    if(!_tpcc_com_ps_CHECK_IID(0))
        {
        *pIndex = 0;
        return 1;
        }

    return 0;
}

const ExtendedProxyFileInfo tpcc_com_ps_ProxyFileInfo =
{
    (PCInterfaceProxyVtblList *) & _tpcc_com_ps_ProxyVtblList,
    (PCInterfaceStubVtblList *) & _tpcc_com_ps_StubVtblList,
    (const PCInterfaceName * ) & _tpcc_com_ps_InterfaceNamesList,
    0, // no delegation
    & _tpcc_com_ps_IID_Lookup,
    1,
    2,
    0, /* table of [async_uuid] interfaces */
    0, /* Filler1 */
    0, /* Filler2 */
    0  /* Filler3 */
};


#endif /* defined(_M_IA64) || defined(_M_AXP64)*/
```

common/txnlog/include/rtetime.h

```
/* FILE: rtetime.h : header file
 * Copyright 1997 Microsoft Corp., All rights reserved.
 *
 * Authors: Charles Levine, Philip Durr
 *                          Microsoft Corp.
 */

#define   MAX_JULIAN_TIME               0x7FFFFFFFFFFFFFFF
#define JULIAN_TIME __int64
#define   TC_TIME             DWORD
extern "C"
{
BOOL                InitJulianTime(LPSYSTEMTIME lpInitTime);
JULIAN_TIME         GetJulianTime(void);
DWORD               MyTickCount(void);
void                GetJulianAndTC(JULIAN_TIME *pJulian, DWORD *pTC);
JULIAN_TIME         ConvertTo64BitTime(int iYear, int iMonth, int iDay, int iHour, int
iMinute, int iSecond);
JULIAN_TIME         Get64BitTime(LPSYSTEMTIME lpInitTime);
int                         JulianDay( int yr, int mm, int dd );
void                JulianToTime(JULIAN_TIME julianTS, int* yr, int* mm, int* dd, int
*hh, int *mi, int *ss );
void                JulianToCalendar( int day, int* yr, int* mm, int* dd );
}
```

common/txnlog/include/spinlock.h

```
/*        FILE: SPINLOCK.H
 *
 * Copyright 1997 Microsoft Corp., All rights reserved.
 *
 * Authors: Mike Parkes, Charles Levine, Philip Durr
 *                            Microsoft Corp.
 */

#ifndef _INC_Spinlock

          const LONG LockClosed         = 1;
          const LONG LockOpen           = 0;

          /*************************************************************
           *
           *   Spinlock and Semaphore locking.
           *
           *   This class provides a very conservative locking scheme.
           *   The assumption behind the code is that locks will be
           *   held for a very short time.  When a lock is taken a memory
           *   location is exchanged.  All other threads that want this
           *   lock wait by spinning and sometimes sleeping on a semaphore
           *   until it becomes free again.  The only other choice is not
           *   to wait at all and move on to do something else.  This
           *   module should normally be used in conjunction with cache
           *   aligned memory in minimize cache line misses.
           *
           *************************************************************/

          class Spinlock
          {
                    // Private data.
                    HANDLE                      Semaphore;
                    volatile LONG               m_Spinlock;
                    volatile LONG               Waiting;

                    #ifdef _DEBUG
                              // Counters for debugging builds.
                              volatile LONG       TotalLocks;
                              volatile LONG       TotalSleeps;
                              volatile LONG       TotalSpins;
                              volatile LONG       TotalWaits;
                    #endif

                    public:
                              // Public functions.

                              Spinlock( void );
```

```
                        inline BOOL ClaimLock( BOOL Wait = TRUE );
                        inline void ReleaseLock( void );
                        ~Spinlock( void );
                        // Disabled operations.
                        Spinlock( const Spinlock & Copy );
                        void operator=( const Spinlock & Copy );

                private:
                        // Private functions.
                        inline BOOL ClaimSpinlock( volatile LONG *sl );
                        void WaitForLock( void );
                        void WakeAllSleepers( void );
        };

        /*************************************************************
         *
         *   A guaranteed atomic exchange.
         *
         *   An attempt is made to claim the Spinlock.  This action is
         *   guaranteed to be atomic.
         *
         *************************************************************/

        inline BOOL Spinlock::ClaimSpinlock( volatile LONG *Spinlock )
        {
                #ifdef _DEBUG
                        InterlockedIncrement( (LPLONG) & TotalLocks );
                #endif
                return ( ((*Spinlock) == LockOpen) && (InterlockedExchange(
(LPLONG)Spinlock, LockClosed ) == LockOpen) );
        }

        /**************************************************
         *
         *   Claim the Spinlock.
         *
         *   Claim the lock if available else wait or exit.
         *
         **************************************************/

        inline BOOL Spinlock::ClaimLock( BOOL Wait )
        {
                if ( ! ClaimSpinlock( (volatile LONG*) & m_Spinlock ) )
                {
                        if ( Wait )
                                WaitForLock();
                        return Wait;
                }
                return TRUE;
        }

        /*******************************************************
         *
         *   Release the Spinlock.
         *
         *   Release the lock and if needed wakeup any sleepers.
         *
         *******************************************************/

        inline void Spinlock::ReleaseLock( void )
        {
                m_Spinlock = LockOpen;
                if ( Waiting > 0 )
                        WakeAllSleepers();
        }

        #define _INC_Spinlock

#endif
```

common/txnlog/include/txnlog.h

```
/*      FILE:           TXNLOG.H
 *                              Microsoft TPC-C Kit Ver. 4.10.000
 *
 *                              NOTE: this file is RTE specific and should not be
included
 *                              in Full Disclosure Reports.
 *
 *                              Copyright Microsoft, 1999
 *
 *      PURPOSE:  Structure definitions for logging delivery txn completion stats.
 *      Contact:  Charles Levine (clevine@microsoft.com)
 */


    typedef struct _TXN_NEWORDER
        {
      BYTE      OL_Count;           //range 0 to 31
      BYTE      OL_Remote_Count;    //range 0 to 31
      WORD      c_id;
      int               o_id;
        } TXN_NEWORDER;

    typedef struct _TXN_PAYMENT
        {
      BYTE      CustByName;
      BYTE      IsRemote;
        } TXN_PAYMENT;

    typedef struct _TXN_ORDERSTATUS
        {
                BYTE      CustByName;
        } TXN_ORDERSTATUS;

        typedef union _TXN_DETAILS
        {
                TXN_NEWORDER        NewOrder;
                TXN_PAYMENT                 Payment;
                TXN_ORDERSTATUS     OrderStatus;
        } TXN_DETAILS;


        // Common header for all records in txn log.  The TxnType field is
        // a switch which identifies the particular variant.
        #define TXN_REC_TYPE_CONTROL            1         //
```

```
        #define TXN_REC_TYPE_TPCC                       2         // replaces
TRANSACTION_TYPE_TPCC
        #define TXN_REC_TYPE_TPCC_DELIV_DEF     3

        typedef struct _TXN_RECORD_HEADER
        {
                JULIAN_TIME         TxnStartT0;                   // start of txn
                BYTE      TxnType;                      // one of TXN_REC_TYPE_*
                BYTE      TxnSubType;                           // depends on
TxnType
        } TXN_RECORD_HEADER, *PTXN_RECORD_HEADER;


        typedef struct _TXN_RECORD_CONTROL
        {
                // common header; must exactly match TXN_RECORD_HEADER
                JULIAN_TIME         TxnStartT0;                   // start of txn
                BYTE      TxnType;                      // = TXN_REC_TYPE_CONTROL
                BYTE      TxnSubType;                           // depends on
TxnType
                // end of common header

                DWORD     Len;                                  // number of bytes
after this field
        } TXN_RECORD_CONTROL, *PTXN_RECORD_CONTROL;


        // TPC-C Txn Record Layout:
        //
    //'TxnStartT0' is a Julian timestamp corresponding to the moment the
    //txn is sent to the SUT, i.e., beginning of response time.  Deltas
    //are in milliseconds.  Note that if RTDelay > 0, then the txn was
    //delayed by this amount.  The delay occurs at the beginning of the
    //response time.  So if RTDelay > 0, then the txn was actually sent
    //at TxnStartT0 + RTDelay.
    //
    //Graphically:
    //
    //  time -->
    //
    //    |--- Menu  ---|-- Keying  --|-- Response --|--- Think  --|
    //     <- DeltaT1 -> <- DeltaT2 -> <- DeltaT4  -> <- DeltaT3 ->
    //                                 ^
    //                                 ^ TxnStartT0
    //
    //RTDelay is the amount of response time delay included in DeltaT4.
    //RTDelay is recorded per txn because this value can be changed on
    //the fly, and so may vary from txn to txn.
    //
    //TxnStatus is the txn completion code.  It is used to indicate errors.
    //For example, in the New Order txn, 1% of txns abort.  TxnStatus will
    //reflect this.

        typedef struct _TXN_RECORD_TPCC
        {
                // common header; must exactly match TXN_RECORD_HEADER
                JULIAN_TIME         TxnStartT0;                   // start of txn
                BYTE      TxnType;                      // = TXN_REC_TYPE_TPCC
                BYTE      TxnSubType;                           // depends on
TxnType
                // end of common header

                int     DeltaT1;              // menu time (ms)
                int     DeltaT2;              // keying time (ms)
                int     DeltaT3;              // think time (ms)
                int     DeltaT4;              // response time (ms)
                int     RTDelay;              // response time delay (ms)
                int                 TxnError;           // error code providing more
detail for TxnStatus
                WORD      w_id;                             // warehouse ID
                BYTE      d_id;                             // assigned district ID for
this thread
                BYTE      d_id_ThisTxn;       // district ID chosen for this
particular
                BYTE      TxnStatus;                        // completion status for txn
to indicate errors
                BYTE      reserved;           // for word alignment
                TXN_DETAILS         TxnDetails;         //
        } TXN_RECORD_TPCC, *PTXN_RECORD_TPCC;

        // TPC-C Deferred Delivery Txn Record Layout:
        //
    //Incorporating delivery transaction information into the above
        //structure would increase the size of TXN_DETAILS from 8 to 42 bytes.
    //Hence, we store delivery transaction details in a separate structure.
    //
        typedef struct _TXN_RECORD_TPCC_DELIV_DEF
        {
                // common header; must exactly match TXN_RECORD_HEADER
                JULIAN_TIME         TxnStartT0;                   // start of txn
                BYTE      TxnType;                      // =
TXN_REC_TYPE_TPCC_DELIV_DEF
                BYTE      TxnSubType;                           // = 0
                // end of common header

                int     DeltaT4;              // response time (ms)
                int                 DeltaTxnExec;       // execution time (ms)
                WORD      w_id;                             // warehouse ID
                BYTE      TxnStatus;                        // completion status for txn
to indicate errors
                BYTE      reserved;           // for word alignment
                short   o_carrier_id;         // carrier id
                long      o_id[10];           // returned delivery transaction ids
        } TXN_RECORD_TPCC_DELIV_DEF, *PTXN_RECORD_TPCC_DELIV_DEF;



#define             TXN_LOG_VERSION               1
#define             TXN_DATA_START                4096      // offset in log file where
log records start
#define             TXN_LOG_EYE_CATCHER "BC"      // signature bytes at the start of log
file


        ////////////////////////////////////////////////////////////////////////
        // The transaction log has a header as the first 4K block.
        //
        typedef struct _TXN_LOG_HEADER
        {
                char                          EyeCatcher[2];      // signature bytes;
should always be "BC"
                int                                       LogVersion;
        // set to TXN_LOG_VERSION
                JULIAN_TIME                   BeginTxnTS;                   //
timestamp of first (lowest) txn start
```

```
                    JULIAN_TIME                 EndTxnTS;           // timestamp of
last (highest) txn completion time
                    int                                     iRecCount;
          // number of records in log file
                    BOOL                        bLogSorted;
                    int                                     iFileSize;
          // file size in bytes

                    // the record map provides a fast way to get close to a particular
timestamp in a sorted log file.
//                  struct
//                  {
//                          JULIAN_TIME                     TS;
          // timestamp of record
//                          int                                     iPos;
          // byte position in file
//                  }                                       RecMap[RecMapSize];
//#define           RecMapSize                              200

          } TXN_LOG_HEADER, *PTXN_LOG_HEADER;



#define   READ_BUFFER_SIZE              64*1024
#define   WRITE_BUFFER_SIZE              8*1024

#define   NUM_READ_BUFFERS              1
#define   NUM_WRITE_BUFFERS             2
#define   MAX_NUM_BUFFERS                         2

// flags passed in to the constructor
#define   TXN_LOG_WRITE                 0x01
#define   TXN_LOG_READ                  0x02
#define   TXN_LOG_SORTED                0x04

#define   TXN_LOG_OS_ERROR    1
#define   TXN_LOG_NOT_SORTED  2

#define SKIP_CTRL_RECS                  1

class CTxnLog
{
          private:
                    DWORD               iBufferSize;                            //buffer
allocated size
                    DWORD               iBytesFreeInBuffer;         //total bytes
available for use in buffer
                    int                             iNumBuffers;
          //buffers in use
                    int                             iActiveBuffer;
          //indicates which buffer is active: 0 or 1
                    int                             iIoBuffer;
          //buffer for any pending IO operation
                    int                             iFilePointer;
          //position in file.
                    int                             iNextRec;
          //when reading, ordinal value of next record

                    // A "save point" is remembered each time GetNextRecord is called
with a start time specified.
                    // The next time it is called, if start time is after the save point,
we start scanning from the
                    // save point.  This is particularly useful in FindBestInterval,
where the log is scanned repeatedly.
                    JULIAN_TIME                 SavePtTime;
                    int                                     iSavePtFilePointer;
                    int                                     iSavePtNextRec;

                    JULIAN_TIME         lastTS;
          //when writing sorted output, used to verify records are sorted
                    BOOL                bWrite;
          //writing log file

                    BOOL                        bLogSorted;
          // is log file sorted?  applies to both input and output
                    JULIAN_TIME                 BeginTxnTS;
          // timestamp of first (lowest) txn start
                    JULIAN_TIME                 EndTxnTS;                   //
timestamp of last (highest) txn completion time
                    int                                     iRecCount;
          // number of records in log file

                    BYTE                *pCurrent;
          //ptr to current buffer
                    BYTE                *pBuffer[MAX_NUM_BUFFERS];

                    PTXN_RECORD_HEADER  *TxnArray;                  //transaction
record pointer array for sort

                    DWORD               dwError;
                    HANDLE              hTxnFile;                           //handle
to log file
                    HANDLE              hMapFile;                           //map
file used when sorting the log
                    HANDLE              hIoComplete;                        //event
to signify that there are no pending IOs
                    HANDLE              hLogFileIo;
          //event to signal the IO thread to write the inactive buffer

                    Spinlock  Spin;                                         //spin
lock to protect the txn log file buffers

                    int Write(BYTE *ptr, DWORD Size);
                    static void LogFileIO(CTxnLog *);

          public:
                    CTxnLog::CTxnLog(LPCTSTR szFileName, DWORD dwOpts);
                    ~CTxnLog(void);

                    int WriteToLog(PTXN_RECORD_TPCC pTxnRcrd);
                    int WriteToLog(PTXN_RECORD_TPCC_DELIV_DEF pTxnRcrd);
                    int WriteToLog(PTXN_RECORD_CONTROL pCtrlRec);
                    int WriteToLog(PTXN_RECORD_HEADER pCtrlRec);

                    int WriteCtrlRecToLog(BYTE SubType, LPTSTR lpStr, DWORD dwLen);

                    void CloseTransactionLogFile(void);

                    PTXN_RECORD_HEADER GetNextRecord(BOOL bSkipCtrlRecs = FALSE);
                    PTXN_RECORD_HEADER GetNextRecord(JULIAN_TIME SeekTimeT0, BOOL
bSkipCtrlRecs = FALSE);

                    int Sort(void);
                    PTXN_RECORD_HEADER GetSortedRecord(int index);
```


Copyright Dell

```
                    inline BOOL IsSorted(void) { return bLogSorted; };
                    inline JULIAN_TIME BeginTS(void) { return BeginTxnTS; };
                    inline JULIAN_TIME EndTS(void) { return EndTxnTS; };
                    inline int RecordCount(void) { return iRecCount; };
};

class CTXNLOG_ERR : public CBaseErr
{
          public:
                    enum CTPCC_DBLIB_ERRS
                    {
                              ERR_BAD_FILE_FORMAT = 1,      // "File format is invalid."
                              ERR_UNKNOWN_LOG_VERSION,      // "Log file version is
unknown."
                              ERR_BROKEN_LOG_FILE,                    // "Log file is
broken."
                              ERR_LOG_NOT_SORTED,                     // "Log file is not
sorted"
                              ERR_INVALID_TIME_SEQ,                   // "Internal Error:
Record Time Sequence invalid."
                    };

                    CTXNLOG_ERR( int iErr ) { m_errno = iErr; };

                    int                 m_errno;

                    int ErrorType() {return ERR_TYPE_TXNLOG;};
                    int ErrorNum() {return m_errno;};

                    // TODO: need to complete...
                    char *ErrorText() {return "";};
};
```


Copyright Dell

Appendix B - Database Design

Build Scripts

setup.cmd

```
ECHO OFF

@ECHO ***************************************************************************
@ECHO *                                                                         *
@ECHO *  Microsoft TPC-C Benchmark Kit Ver. 4.01                                *
@ECHO *                                                                         *
@ECHO ***************************************************************************

if '%1'==''' goto usage
if '%2'==''' goto usage
if '%3'==''' goto usage
if '%4'==''' goto usage
if not '%5'==''' if not '%5' == 'scaled' goto usage

::Cleanup any old .err files
@if exist logs\*.err del logs\*.err
         >nul

if  '%3'=='full' goto start
if  '%3'=='builddb' goto builddb
if  '%3'=='objects' goto objects
if  '%3'=='bulkload' goto bulkload
if  '%3'=='objectsfull' goto objects
if  '%3'=='bulkloadfull' goto bulkload
if  '%3'=='backup' goto backup
goto usage

:start
:: Cleanup the logs directory...
@if exist logs\version.log del logs\version.log                                >nul
@if exist logs\db.log del logs\db.log                                          >nul
@if exist logs\objects.log del logs\objects.log                                >nul
@if exist logs\objects.log del logs\objects.log                                >nul
@if exist logs\bulkload.log del logs\bulkload.log                        >nul
@if exist logs\backup.log del logs\backup.log                                  >nul

isql -Usa -P -S%1 -Q"select @@version"                                         >
logs\version.log
isql -Usa -P -S%1 -Q"select getdate()"                                         >>
logs\version.log

:builddb
@if exist logs\db.log del logs\db.log                                          >nul
@ECHO Building database files and database...
isql -Usa -P -S%1 -e < scripts\%2.war\%4\createdb.sql                          >
logs\db.log
@ECHO Database build complete.
if  '%3'=='full' goto objects
goto end

:objects
@if exist logs\objects.log del logs\objects.log                                >nul
@ECHO Creating database objects...
isql -Usa -P -S%1 -e < scripts\ddl\%4\tables.sql                       >  logs\objects.log
isql -Usa -P -S%1 -e < scripts\dml\%4\neword.sql                       >> logs\objects.log
isql -Usa -P -S%1 -e < scripts\dml\%4\payment.sql                      >> logs\objects.log
isql -Usa -P -S%1 -e < scripts\dml\%4\ordstat.sql                      >> logs\objects.log
isql -Usa -P -S%1 -e < scripts\dml\%4\delivery.sql                             >>
logs\objects.log
isql -Usa -P -S%1 -e < scripts\dml\%4\stocklev.sql                             >>
logs\objects.log
@ECHO Database object creation complete.
if  '%3'=='full' goto bulkload
if  '%3'=='objectsfull' goto bulkload
goto end

:bulkload
@if exist logs\bulkload.log del logs\bulkload.log                      >nul
@ECHO Beginning data load and index creation...
isql -Usa -P -S%1 -e < scripts\utility\%4\dbopt1.sql                           >>
logs\objects.log
if '%4'=='mssql70' goto odbc
if '%4'=='mssql65' goto dblib
goto usage
:dblib
if '%5'==''      loader\%4\bin\tpccldr -S%1 -W%2 -flogs\bulkload.log -dscripts\ddl\%4 -c0
if '%5'=='normal' loader\%4\bin\tpccldr -S%1 -W%2 -flogs\bulkload.log -dscripts\ddl\%4 -
c0
if '%5'=='scaled' loader\%4\bin\tpccldr -S%1 -W%2 -flogs\bulkload.log -dscripts\ddl\%4 -
c1
goto bulkloaddone
:odbc
if '%5'==''      loader\%4\bin\tpccldr -S%1 -W%2 -flogs\bulkload.log -dscripts\ddl\%4 -c0
if '%5'=='normal' loader\%4\bin\tpccldr -S%1 -W%2 -flogs\bulkload.log -dscripts\ddl\%4 -
c0
if '%5'=='scaled' loader\%4\bin\tpccldr -S%1 -W%2 -flogs\bulkload.log -dscripts\ddl\%4 -
c1
goto bulkloaddone
:bulkloaddone
isql -Usa -P -S%1 -e < scripts\utility\%4\dbopt2.sql                           >>
logs\bulkload.log
@ECHO Data load and index creation complete.
if  '%3'=='full' goto backup
if  '%3'=='objectsfull' goto backup
if  '%3'=='bulkloadfull' goto backup
goto end

:backup
@if exist logs\backup.log del logs\backup.log                                  >nul
@ECHO Backing up database...
isql -Usa -P -S%1 -e < scripts\%2.war\%4\backup.sql                            >
logs\backup.log
@ECHO Database backup complete.
if  '%3'=='full' goto verifyload
if  '%3'=='objectsfull' goto verifyload
if  '%3'=='bulkloadfull' goto verifyload
goto complete

:verifyload
@if exist logs\verifyload.log del logs\verifyload.log                          >nul
@Echo Verifying TPC-C database load...
```


Copyright Dell

```
isql -Usa -P -S%1 < scripts\utility\%4\verifytpccload.sql                    >
logs\verifyload.log
@ECHO Check logs\verifyload.log to verify database load.

:complete
@ECHO ***************************************************************************
@ECHO *                                                                         *
@ECHO *  Full TPC-C build complete.  Check logs directory for setup errors.     *
@ECHO *                                                                         *
@ECHO ***************************************************************************

goto end

:usage
@ECHO ***************************************************************************
@ECHO *                                                                         *
@ECHO *  The TPC-C setup command file requires the following parameters:        *
@ECHO *                                                                         *
@ECHO *  setup SERVER NUMWAR BLDOPT VERSION DBTYPE                              *
@ECHO *                                                                         *
@ECHO *      SERVER  = machine name of server (use "" for local server)         *
@ECHO *      NUMWAR  = number of warehouses                                     *
@ECHO *      BLDOPT  = full, builddb, objects, objectsfull, bulkload,           *
@ECHO *                bulkloadfull, or backup                                  *
@ECHO *      VERSION = mssql65 or mssql70                                       *
@ECHO *      DBTYPE  = normal or scaled                                         *
@ECHO *                                                                         *
@ECHO *  Note #1: the BLDOPT and VERSION parameters are case sensitive.         *
@ECHO *                                                                         *
@ECHO *  Note #2: the DBTYPE is optional.  If no DBTYPE is specified, SETUP     *
@ECHO *           will default to NORMAL.                                       *
@ECHO *                                                                         *
@ECHO *  Example:                                                               *
@ECHO *                                                                         *
@ECHO *  The following command would be used to build a complete 200            *
@ECHO *  warehouse database on SQL Server 7.0 runnning on server \\myserver.    *
@ECHO *                                                                         *
@ECHO *      SETUP myserver 200 full mssql70                                    *
@ECHO *                                                                         *
@ECHO *  Note, this command file does a backup of the database by default      *
@ECHO *  after the database build process is complete.  If you do not wish     *
@ECHO *  to make a backup (strongly discouraged), you must edit this file      *
@ECHO *  and comment that section out.  Also, if you need to run the dbcheck   *
@ECHO *  and the dbtables scripts on the fresh database load for an audit,     *
@ECHO *  you must either run them manually or edit this file to include them.  *
@ECHO *                                                                         *
@ECHO ***************************************************************************

:end

echo on
```

createdb.sql

```
--  File:     CREATEDB.SQL
--            Microsoft TPC-C Benchmark Kit Ver. 4.21
--            Copyright Microsoft, 1999, 2000
--  Purpose:  Creates tpcc database and backup files


use master
go

--        Create temporary table for timing

if exists ( select name from sysobjects where name = 'tpcc_timer' )
          drop table tpcc_timer
go

create table tpcc_timer
(
          start_date                                        char(30),
          end_date                                  char(30)
)

insert    into tpcc_timer values (0,0)
go

--        Store starting time

update    tpcc_timer
set       start_date          = (select convert(char(30), getdate(),9))
go

--  create main database files

CREATE DATABASE tpcc
ON PRIMARY
(         NAME                = MSSQL70_tpcc_root,
          FILENAME  = "C:\MSSQL70_tpcc_root.mdf",
          SIZE                = 8MB,
          FILEGROWTH          =0),
FILEGROUP MSSQL70_misc_fg
(         NAME                = MSSQL70_misc1,
          FILENAME  = "F:",
          SIZE                = 92792MB,
          FILEGROWTH          = 0),
(         NAME                = MSSQL70_misc2,
          FILENAME  = "H:",
          SIZE                = 92792MB,
          FILEGROWTH          = 0),
(         NAME                = MSSQL70_misc3,
          FILENAME  = "J:",
          SIZE                = 92792MB,
          FILEGROWTH          = 0),
(         NAME                = MSSQL70_misc4,
          FILENAME  = "L:",
          SIZE                = 92792MB,
          FILEGROWTH          = 0),
(         NAME                = MSSQL70_misc5,
          FILENAME  = "N:",
          SIZE                = 92792MB,
          FILEGROWTH          = 0),


FILEGROUP MSSQL70_cs_fg
(         NAME                = MSSQL70_cs1,
          FILENAME  = "E:",
          SIZE                = 167552MB,
          FILEGROWTH          = 0),
(         NAME                = MSSQL70_cs2,
          FILENAME  = "G:",
          SIZE                = 167552MB,
          FILEGROWTH          = 0),
```

```
(         NAME                = MSSQL70_cs3,
          FILENAME  = "I:",
          SIZE                = 167552MB,
          FILEGROWTH          = 0),
(         NAME                = MSSQL70_cs4,
          FILENAME  = "K:",
          SIZE                = 167552MB,
          FILEGROWTH          = 0),
(         NAME                = MSSQL70_cs5,
          FILENAME  = "M:",
          SIZE                = 167552MB,
          FILEGROWTH          = 0)

LOG ON
(         NAME                =MSSQL70_tpccv3_log,
          FILENAME  ="S:",
          SIZE                =250000MB,
          FILEGROWTH          =0)
go

-- Store ending time
update    tpcc_timer
set       end_date  = (select convert(char(30), getdate(),9))
go

select "Elapsed time (in seconds): ", datediff(second,(select start_date from
tpcc_timer),(select end_date from tpcc_timer))

--        remove temporary table

if exists ( select name from sysobjects where name = 'tpcc_timer' )
          drop table tpcc_timer
go
```

tables.sql

```
--  File:     TABLES.SQL
--            Microsoft TPC-C Benchmark Kit Ver. 4.00
--            Copyright Microsoft, 1996
--  Purpose:  Creates TPC-C tables


use tpcc
go

if exists ( select name from sysobjects where name = 'warehouse' )
          drop table warehouse
go
create table warehouse
(
          w_id                                  smallint,
          w_name                                char(10),
          w_street_1                            char(20),
          w_street_2                            char(20),
          w_city                                char(20),
          w_state                               char(2),
          w_zip                                 char(9),
          w_tax                                 numeric(4,4),
          w_ytd                                 numeric(12,2)
) on MSSQL70_misc_fg
go

if exists ( select name from sysobjects where name = 'district' )
          drop table district
go
create table district
(
          d_id                                  tinyint,
          d_w_id                                smallint,
          d_name                                char(10),
          d_street_1                            char(20),
          d_street_2                            char(20),
          d_city                                char(20),
          d_state                               char(2),
          d_zip                                 char(9),
          d_tax                                 numeric(4,4),
          d_ytd                                 numeric(12,2),
          d_next_o_id                           int
) on MSSQL70_misc_fg
go

if exists ( select name from sysobjects where name = 'customer' )
          drop table customer
go
create table customer
(
          c_id                                  int,
          c_d_id                                tinyint,
          c_w_id                                smallint,
          c_first                               char(16),
          c_middle                      char(2),
          c_last                                char(16),
          c_street_1                            char(20),
          c_street_2                            char(20),
          c_city                                char(20),
          c_state                               char(2),
          c_zip                                 char(9),
          c_phone                               char(16),
          c_since                               datetime,
          c_credit                      char(2),
          c_credit_lim                  numeric(12,2),
          c_discount                            numeric(4,4),
          c_balance                     numeric(12,2),
          c_ytd_payment                 numeric(12,2),
          c_payment_cnt                 smallint,
          c_delivery_cnt                smallint,
          c_data                                char(500)
) on MSSQL70_cs_fg
go

if exists ( select name from sysobjects where name = 'history' )
          drop table history
go
create table history
(
          h_c_id                                int,
          h_c_d_id                      tinyint,
          h_c_w_id                      smallint,
          h_d_id                                tinyint,
          h_w_id                                smallint,
          h_date                                datetime,
          h_amount                      numeric(6,2),
          h_data                                char(24)
```

```
) on MSSQL70_misc_fg
go

if exists ( select name from sysobjects where name = 'new_order' )
          drop table new_order
go
create table new_order
(
          no_o_id                                   int,
          no_d_id                                   tinyint,
          no_w_id                                   smallint
) on MSSQL70_misc_fg
go

if exists ( select name from sysobjects where name = 'orders' )
          drop table orders
go
create table orders
(
          o_id                                      int,
          o_d_id                                    tinyint,
          o_w_id                                    smallint,
          o_c_id                                    int,
          o_entry_d                         datetime,
          o_carrier_id                      tinyint,
          o_ol_cnt                          tinyint,
          o_all_local                               tinyint
) on MSSQL70_misc_fg
go

if exists ( select name from sysobjects where name = 'order_line' )
          drop table order_line
go
create table order_line
(
          ol_o_id                                   int,
          ol_d_id                                   tinyint,
          ol_w_id                                   smallint,
          ol_number                         tinyint,
          ol_i_id                                   int,
          ol_supply_w_id                    smallint,
          ol_delivery_d                     datetime,
          ol_quantity                               smallint,
          ol_amount                         numeric(6,2),
          ol_dist_info                      char(24)
) on MSSQL70_misc_fg
go

if exists ( select name from sysobjects where name = 'item' )
          drop table item
go
create table item
(
          i_id                                      int,
          i_im_id                                   int,
          i_name                                    char(24),
          i_price                                   numeric(5,2),
          i_data                                    char(50)
) on MSSQL70_misc_fg
go

if exists ( select name from sysobjects where name = 'stock' )
          drop table stock
go
create table stock
(
          s_i_id                                    int,
          s_w_id                                    smallint,
          s_quantity                                smallint,
          s_dist_01                         char(24),
          s_dist_02                         char(24),
          s_dist_03                         char(24),
          s_dist_04                         char(24),
          s_dist_05                         char(24),
          s_dist_06                         char(24),
          s_dist_07                         char(24),
          s_dist_08                         char(24),
          s_dist_09                         char(24),
          s_dist_10                         char(24),
          s_ytd                                     int,
          s_order_cnt                               smallint,
          s_remote_cnt                      smallint,
          s_data                                    char(50)
) on MSSQL70_cs_fg
go
```

idxcuscl.sql

```
--  File:     IDXCUSCL.SQL
--            Microsoft TPC-C Benchmark Kit Ver. 4.00
--            Copyright Microsoft, 1996
--  Purpose:  Creates clustered index on customer table


use tpcc
go

declare @startdate datetime
declare @enddate datetime
select @startdate = getdate()
select "Start date:", convert(varchar(30),@startdate,9)

if exists ( select name from sysindexes where name = 'customer_c1' )
          drop index customer.customer_c1

create unique clustered index customer_c1 on customer(c_w_id, c_d_id, c_id)
          on MSSQL70_cs_fg

select @enddate = getdate()
select "End date: ", convert(varchar(30),@enddate,9)
select "Elapsed time (in seconds): ", datediff(second, @startdate, @enddate)

go
```

idxcusnc.sql

Copyright Dell

```
--  File:     IDXCUSNC.SQL
--            Microsoft TPC-C Benchmark Kit Ver. 4.00
--            Copyright Microsoft, 1996
--  Purpose:  Creates non-clustered index on customer table


use tpcc
go

declare @startdate datetime
declare @enddate datetime
select @startdate = getdate()
select "Start date:", convert(varchar(30),@startdate,9)

if exists ( select name from sysindexes where  name = 'customer_nc1' )
          drop index customer.customer_nc1

create unique nonclustered index customer_nc1 on customer(c_w_id, c_d_id, c_last,
c_first, c_id)
          on MSSQL70_cs_fg

select @enddate = getdate()
select "End date: ", convert(varchar(30),@enddate,9)
select "Elapsed time (in seconds): ", datediff(second, @startdate, @enddate)

go
```

idxdiscl.sql

```
--  File:     IDXDISCL.SQL
--            Microsoft TPC-C Benchmark Kit Ver. 4.00
--            Copyright Microsoft, 1996
--  Purpose:  Creates clustered index on district table


use tpcc
go

declare @startdate datetime
declare @enddate datetime
select @startdate = getdate()
select "Start date:", convert(varchar(30),@startdate,9)

if exists ( select name from sysindexes where name = 'district_c1' )
          drop index district.district_c1

create unique clustered index  district_c1 on district(d_w_id, d_id)
          with fillfactor=100 on MSSQL70_misc_fg

select @enddate = getdate()
select "End date: ", convert(varchar(30),@enddate,9)
select "Elapsed time (in seconds): ", datediff(second, @startdate, @enddate)

go
```

idxitmcl.sql

```
--  File:     IDXITMCL.SQL
--            Microsoft TPC-C Benchmark Kit Ver. 4.00
--            Copyright Microsoft, 1996
--  Purpose:  Creates clustered index on item table

use tpcc
go

declare @startdate datetime
declare @enddate datetime
select @startdate = getdate()
select "Start date:", convert(varchar(30),@startdate,9)

if exists ( select name from sysindexes where  name = 'item_c1' )
          drop index item.item_c1

create unique clustered index item_c1 on item(i_id)
          on MSSQL70_misc_fg

select @enddate = getdate()
select "End date: ", convert(varchar(30),@enddate,9)
select "Elapsed time (in seconds): ", datediff(second, @startdate, @enddate)

go
```

idxnodcl.sql

```
--  File:     IDXNODCL.SQL
--            Microsoft TPC-C Benchmark Kit Ver. 4.00
--            Copyright Microsoft, 1996
--  Purpose:  Creates clustered index on new_order table


use tpcc
go

declare @startdate datetime
declare @enddate datetime
select @startdate = getdate()
select "Start date:", convert(varchar(30),@startdate,9)

if exists ( select name from sysindexes where  name = 'new_order_c1' )
          drop index new_order.new_order_c1

create unique clustered index new_order_c1 on new_order(no_w_id, no_d_id, no_o_id)
          on MSSQL70_misc_fg

select @enddate = getdate()
select "End date: ", convert(varchar(30),@enddate,9)
select "Elapsed time (in seconds): ", datediff(second, @startdate, @enddate)

go
```

idxodlcl.sql

```
--  File:     IDXNODCL.SQL
--            Microsoft TPC-C Benchmark Kit Ver. 4.00
--            Copyright Microsoft, 1996
--  Purpose:  Creates clustered index on new_order table


use tpcc
go

declare @startdate datetime
declare @enddate datetime
select @startdate = getdate()
select "Start date:", convert(varchar(30),@startdate,9)

if exists ( select name from sysindexes where  name = 'new_order_c1' )
          drop index new_order.new_order_c1

create unique clustered index new_order_c1 on new_order(no_w_id, no_d_id, no_o_id)
          on MSSQL70_misc_fg

select @enddate = getdate()
select "End date: ", convert(varchar(30),@enddate,9)
select "Elapsed time (in seconds): ", datediff(second, @startdate, @enddate)

go
```

idxordcl.sql

```
--  File:     IDXORDCL.SQL
--            Microsoft TPC-C Benchmark Kit Ver. 4.00
--            Copyright Microsoft, 1996
--  Purpose:  Creates clustered index on orders table


use tpcc
go

declare @startdate datetime
declare @enddate datetime
select @startdate = getdate()
select "Start date:", convert(varchar(30),@startdate,9)

if exists ( select name from sysindexes where  name = 'orders_c1' )
          drop index orders.orders_c1

create unique clustered index orders_c1 on orders(o_w_id, o_d_id, o_id)
          on MSSQL70_misc_fg

select @enddate = getdate()
select "End date: ", convert(varchar(30),@enddate,9)
select "Elapsed time (in seconds): ", datediff(second, @startdate, @enddate)

go
```

idxstkcl.sql

```
--  File:     IDXSTKCL.SQL
--            Microsoft TPC-C Benchmark Kit Ver. 4.00
--            Copyright Microsoft, 1996
--  Purpose:  Creates clustered index on stock table


use tpcc
go

declare @startdate datetime
declare @enddate datetime
select @startdate = getdate()
select "Start date:", convert(varchar(30),@startdate,9)

if exists ( select name from sysindexes where  name = 'stock_c1' )
          drop index stock.stock_c1

create unique clustered index stock_c1 on stock(s_i_id, s_w_id)
          on MSSQL70_cs_fg

select @enddate = getdate()
select "End date: ", convert(varchar(30),@enddate,9)
select "Elapsed time (in seconds): ", datediff(second, @startdate, @enddate)

go
```

idxwarcl.sql

```
--  File:     IDXWARCL.SQL
--            Microsoft TPC-C Benchmark Kit Ver. 4.00
--            Copyright Microsoft, 1996
--  Purpose:  Creates clustered index on warehouse table


use tpcc
go

declare @startdate datetime
declare @enddate datetime
select @startdate = getdate()
select "Start date:", convert(varchar(30),@startdate,9)

if exists ( select name from sysindexes where name = 'warehouse_c1' )
          drop index warehouse.warehouse_c1

create unique clustered index warehouse_c1 on warehouse(w_id)
          with fillfactor=100 on MSSQL70_misc_fg

select @enddate = getdate()
select "End date: ", convert(varchar(30),@enddate,9)
```


Copyright Dell

```
select "Elapsed time (in seconds): ", datediff(second, @startdate, @enddate)

go
```

dbopt1.sql

```
--  File:     DBOPT1.SQL
--            Microsoft TPC-C Benchmark Kit Ver. 4.00
--            Copyright Microsoft, 1996
--  Purpose:  Sets database options for data load


use master
go

exec sp_dboption tpcc,'select into/bulkcopy',true
exec sp_dboption tpcc,'trunc. log on chkpt.',true
go

use tpcc
go

checkpoint
go
```

dbopt2.sql

```
--  File:     DBOPT2.SQL
--            Microsoft TPC-C Benchmark Kit Ver. 4.00
--            Copyright Microsoft, 1996
--  Purpose:  Resets database options after data load


use master
go

sp_dboption tpcc,'select ',false
go

sp_dboption tpcc,'trunc. ',false
go

use tpcc
go

checkpoint
go

sp_configure allow,1
go

reconfigure with override
go

/*                                              */
/* Set option values for user-defined indexes */
/*                                              */

sp_indexoption 'customer','AllowPageLocks',FALSE
go
sp_indexoption 'district','AllowPageLocks',FALSE
go
sp_indexoption 'warehouse','AllowPageLocks',FALSE
go
sp_indexoption 'stock','AllowPageLocks',FALSE
go
sp_indexoption 'order_line','AllowPageLocks',FALSE
go
sp_indexoption 'orders','AllowPageLocks',FALSE
go
sp_indexoption 'new_order','AllowRowLocks',FALSE
go
sp_indexoption 'item','AllowRowLocks',FALSE
go
sp_indexoption 'item','AllowPageLocks',FALSE
go

Print ' '
Print '******************'
Print 'Pre-specified Locking Hierarchy:'
Print '   Lockflag = 0 ==> No pre-pecified hierarchy'
Print '   Lockflag = 1 ==> Lock at Page-level then Table-level'
Print '   Lockflag = 2 ==> Lock at Row-level then Table-level'
Print '   Lockflag = 3 ==> Lock at Table-level'
Print ' '

select name,lockflags
from sysindexes
where object_id("warehouse")=id or
            object_id("district")=id or
            object_id("customer")=id or
            object_id("stock")=id or
            object_id("orders")=id or
            object_id("order_line")=id or
            object_id("history")=id or
            object_id("new_order")=id or
            object_id("item")=id
order by lockflags asc
go

sp_configure allow,0
go

reconfigure with override
go

exec sp_dboption tpcc, 'auto update statistics', FALSE
exec sp_dboption tpcc, 'auto create statistics', FALSE
go

exec sp_tableoption "district","pintable",true
exec sp_tableoption "warehouse","pintable",true
exec sp_tableoption "new_order","pintable",true
exec sp_tableoption "item","pintable",true
```

```
go
```

dbopt3.sql

```
use tpcc
go
sp_indexoption 'orders','AllowPagelocks',TRUE
go
sp_indexoption 'orders','AllowRowlocks',FALSE
go
sp_indexoption 'order_line','AllowPagelocks',TRUE
go
sp_indexoption 'order_line','AllowRowlocks',FALSE
go
```

backup.sql

```
--  File:     BACKUP.SQL
--            Microsoft TPC-C Benchmark Kit Ver. 4.21
--            Copyright Microsoft, 1999, 2000
--  Purpose:  Creates backup of tpcc database


declare @startdate datetime
declare @enddate datetime
select @startdate = getdate()
select "Start date:", convert(varchar(30),@startdate,9)

dump database tpcc to tpccback1,tpccback2,tpccback3,tpccback4,tpccback5 with init, stats
= 5

select @enddate = getdate()
select "End date: ", convert(varchar(30),@enddate,9)
select "Elapsed time (in seconds): ", datediff(second, @startdate, @enddate)

go
```

restore.sql

```
--  File:     RESTORE.SQL
--            Microsoft TPC-C Benchmark Kit Ver. 4.21
--            Copyright Microsoft, 1999, 2000
--  Purpose:  Loads database backup from backup files


declare @startdate datetime
declare @enddate datetime
select @startdate = getdate()
select "Start date:", convert(varchar(30),@startdate,9)

load database tpcc from tpccback1,tpccback2,tpccback3,tpccback4,tpccback5 with stats = 5

select @enddate = getdate()
select "End date: ", convert(varchar(30),@enddate,9)
select "Elapsed time (in seconds): ", datediff(second, @startdate, @enddate)

go
```


Copyright Dell

Stored Procedures

neword.sql

```
--  File:     NEWORD.SQL
--            Microsoft TPC-C Benchmark Kit Ver. 4.01
--            Copyright Microsoft, 1996
--  Purpose:  Creates new order transaction stored procedure
--
--  Modified 9/21/98 - Jamie Reding - Microsoft Corporation
--                  Reordered @rowcount check so that invalid supply warehouse id,
--      as well as invalid item id, is detected and causes explicit
--                  transaction rollback.
--

use tpcc
go

if exists ( select name from sysobjects where name = "tpcc_neworder" )
          drop procedure tpcc_neworder
go

create proc tpcc_neworder
                                                        @w_id           smallint,
                                                        @d_id           tinyint,
                                                        @c_id           int,
                                                        @o_ol_cnt       tinyint,
                                                        @o_all_local    tinyint,
                                                        @i_id1  int = 0, @s_w_id1 smallint = 0,
@ol_qty1 smallint = 0,
                                                        @i_id2  int = 0, @s_w_id2 smallint = 0,
@ol_qty2 smallint = 0,
                                                        @i_id3  int = 0, @s_w_id3 smallint = 0,
@ol_qty3 smallint = 0,
                                                        @i_id4  int = 0, @s_w_id4 smallint = 0,
@ol_qty4 smallint = 0,
                                                        @i_id5  int = 0, @s_w_id5 smallint = 0,
@ol_qty5 smallint = 0,
                                                        @i_id6  int = 0, @s_w_id6 smallint = 0,
@ol_qty6 smallint = 0,
                                                        @i_id7  int = 0, @s_w_id7 smallint = 0,
@ol_qty7 smallint = 0,
                                                        @i_id8  int = 0, @s_w_id8 smallint = 0,
@ol_qty8 smallint = 0,
                                                        @i_id9  int = 0, @s_w_id9 smallint = 0,
@ol_qty9 smallint = 0,
                                                        @i_id10 int = 0, @s_w_id10 smallint =
0, @ol_qty10 smallint = 0,
                                                        @i_id11 int = 0, @s_w_id11 smallint =
0, @ol_qty11 smallint = 0,
                                                        @i_id12 int = 0, @s_w_id12 smallint =
0, @ol_qty12 smallint = 0,
                                                        @i_id13 int = 0, @s_w_id13 smallint =
0, @ol_qty13 smallint = 0,
                                                        @i_id14 int = 0, @s_w_id14 smallint =
0, @ol_qty14 smallint = 0,
                                                        @i_id15 int = 0, @s_w_id15 smallint =
0, @ol_qty15 smallint = 0


as
declare   @w_tax          numeric(4,4),
        @d_tax          numeric(4,4),
        @c_last         char(16),
        @c_credit       char(2),
        @c_discount     numeric(4,4),
        @i_price        numeric(5,2),
        @i_name         char(24),
        @i_data         char(50),
        @o_entry_d      datetime,
        @remote_flag    int,
        @s_quantity     smallint,
        @s_data         char(50),
        @s_dist         char(24),
                    @li_no          int,
                    @o_id                           int,
                    @commit_flag    tinyint,
        @li_id          int,
        @li_s_w_id      smallint,
        @li_qty         smallint,
                    @ol_number                      int,
                    @c_id_local                     int

begin

          begin transaction n

--  get district tax and next availible order id and update
--  plus initialize local variables

          update    district
          set                 @d_tax       = d_tax,
                              @o_id        = d_next_o_id,
                              d_next_o_id  = d_next_o_id + 1,
                              @o_entry_d   = getdate(),
                              @li_no       = 0,
                              @commit_flag = 1
          where     d_w_id       = @w_id and
                              d_id         = @d_id

--  process orderlines

    while (@li_no < @o_ol_cnt)
          begin

        select @li_no = @li_no + 1

--  set i_id, s_w_id, and qty for this lineitem

               select @li_id = case @li_no
                       when 1 then @i_id1
                                   when 2 then @i_id2
                                   when 3 then @i_id3
                                   when 4 then @i_id4
                                   when 5 then @i_id5
                                   when 6 then @i_id6
                                   when 7 then @i_id7
```

```
                                when 8 then @i_id8
                                when 9 then @i_id9
                                when 10 then @i_id10
                                when 11 then @i_id11
                                when 12 then @i_id12
                                when 13 then @i_id13
                                when 14 then @i_id14
                                when 15 then @i_id15
                                end,

                                @li_s_w_id = case @li_no
                                when 1 then @s_w_id1
                                when 2 then @s_w_id2
                                when 3 then @s_w_id3
                                when 4 then @s_w_id4
                                when 5 then @s_w_id5
                                when 6 then @s_w_id6
                                when 7 then @s_w_id7
                                when 8 then @s_w_id8
                                when 9 then @s_w_id9
                                when 10 then @s_w_id10
                                when 11 then @s_w_id11
                                when 12 then @s_w_id12
                                when 13 then @s_w_id13
                                when 14 then @s_w_id14
                                when 15 then @s_w_id15
                                end,

                                @li_qty = case  @li_no
                                when 1 then @ol_qty1
                                when 2 then @ol_qty2
                                when 3 then @ol_qty3
                                when 4 then @ol_qty4
                                when 5 then @ol_qty5
                                when 6 then @ol_qty6
                                when 7 then @ol_qty7
                                when 8 then @ol_qty8
                                when 9 then @ol_qty9
                                when 10 then @ol_qty10
                                when 11 then @ol_qty11
                                when 12 then @ol_qty12
                                when 13 then @ol_qty13
                                when 14 then @ol_qty14
                                when 15 then @ol_qty15
                                end

--  get item data (no one updates item)

                    select    @i_price = i_price,
                                        @i_name  = i_name,
                                        @i_data  = i_data
                    from      item (tablock repeatableread)
                    where     i_id = @li_id

--  update stock values

                    update    stock
                    set                 s_ytd        = s_ytd + @li_qty,
                                        @s_quantity  = s_quantity   = s_quantity -
@li_qty +

                               case when (s_quantity - @li_qty < 10) then 91 else 0 end,
                                        s_order_cnt  = s_order_cnt + 1,
                                        s_remote_cnt = s_remote_cnt +

          case when (@li_s_w_id = @w_id) then 0 else 1 end,
                                        @s_data      = s_data,
                                        @s_dist      = case @d_id
                                                                                                when 1
then s_dist_01
                                                  when 2  then s_dist_02
                                                  when 3  then s_dist_03
                                                  when 4  then s_dist_04
                                                  when 5  then s_dist_05
                                                  when 6  then s_dist_06
                                                  when 7  then s_dist_07
                                                  when 8  then s_dist_08
                                                  when 9  then s_dist_09
                                                  when 10 then s_dist_10
                                        end
                    where     s_i_id              = @li_id and
                                  s_w_id                    = @li_s_w_id

--  if there actually is a stock (and item) with these ids, go to work

              if (@@rowcount > 0)
                                begin

--  insert order_line data (using data from item and stock)

                                        insert into order_line values(@o_id,

                      @d_id,

                      @w_id,

                      @li_no,

                      @li_id,

                      @li_s_w_id,

                      "dec 31, 1899",

                      @li_qty,

                      @i_price * @li_qty,

                      @s_dist)


--  send line-item data to client

                                        select    @i_name,
                                                            @s_quantity,
                                                            b_g = case when (
(patindex("%ORIGINAL%",@i_data) > 0) and

            (patindex("%ORIGINAL%",@s_data) > 0) )
                                                                        then "B" else "G"
end,
                                                            @i_price,
                                                            @i_price * @li_qty


                                end
        else
```

```
                    begin

--  no item (or stock) found - triggers rollback condition

                              select "",0,"",0,0
                              select @commit_flag = 0

                    end
          end

--  get customer last name, discount, and credit rating

    select          @c_last     = c_last,
                              @c_discount = c_discount,
                              @c_credit   = c_credit,
                              @c_id_local = c_id
    from  customer (repeatableread)
    where c_id                = @c_id and
                              c_w_id              = @w_id and
                              c_d_id              = @d_id

--  insert fresh row into orders table

    insert into orders values (@o_id,
                                        @d_id,
                                                @w_id,
                                                          @c_id_local,
                                                          @o_entry_d,
                                                              0,
                                                              @o_ol_cnt,
                                                              @o_all_local)

--  insert corresponding row into new-order table

          insert into new_order values (@o_id,
                                                                                  @d_id,
                                                                                  @w_id)

--  select warehouse tax

          select    @w_tax    = w_tax
          from      warehouse (repeatableread)
          where     w_id      = @w_id

          if (@commit_flag = 1)
                    commit transaction n
          else

--  all that work for nuthin!!!

                    rollback transaction n

--  return order data to client

          select @w_tax,
                 @d_tax,
                      @o_id,
                      @c_last,
                      @c_discount,
                      @c_credit,
                      @o_entry_d,
                      @commit_flag
```

```
end

go
```

payment.sql

```
--  File:     PAYMENT.SQL
--            Microsoft TPC-C Benchmark Kit Ver. 4.00
--            Copyright Microsoft, 1996
--  Purpose:  Creates payment transaction stored procedure


use tpcc
go

if exists (select name from sysobjects where name = "tpcc_payment" )
          drop procedure tpcc_payment
go

create proc tpcc_payment @w_id           smallint,
                                                                  @c_w_id         smallint,
                                                                  @h_amount
numeric(6,2),
                                                                  @d_id           tinyint,
                                                                  @c_d_id         tinyint,
                                                                  @c_id           int,
                                                                  @c_last         char(16) =
""


as
declare  @w_street_1     char(20),
         @w_street_2     char(20),
         @w_city         char(20),
         @w_state        char(2),
         @w_zip          char(9),
         @w_name         char(10),
         @d_street_1     char(20),
         @d_street_2     char(20),
         @d_city         char(20),
         @d_state        char(2),
         @d_zip          char(9),
         @d_name         char(10),
         @c_first        char(16),
         @c_middle       char(2),
         @c_street_1     char(20),
         @c_street_2     char(20),
         @c_city         char(20),
         @c_state        char(2),
         @c_zip          char(9),
         @c_phone        char(16),
         @c_since        datetime,
         @c_credit       char(2),
         @c_credit_lim   numeric(12,2),
         @c_balance      numeric(12,2),
         @c_discount     numeric(4,4),
         @data           char(500),
         @c_data         char(500),
         @datetime       datetime,
         @w_ytd          numeric(12,2),
```

```
        @d_ytd          numeric(12,2),
        @cnt            smallint,
        @val            smallint,
        @screen_data          char(200),
                    @d_id_local         tinyint,
                    @w_id_local         smallint,
                    @c_id_local         int

select @screen_data = ""

begin tran p

--  get payment date

          select @datetime = getdate()

          if (@c_id = 0)
          begin

--  get customer id and info using last name

                    select @cnt = count(*)
                    from customer (repeatableread)
                    where c_last = @c_last and
                          c_w_id = @c_w_id and
                          c_d_id = @c_d_id


                    select @val = (@cnt + 1) / 2
                    set rowcount @val

                    select @c_id = c_id
                    from customer (repeatableread)
                    where c_last = @c_last and
                          c_w_id = @c_w_id and
                          c_d_id = @c_d_id
                    order by c_last, c_first

                    set rowcount 0
          end

--  get customer info and update balances

          update customer set
                    @c_balance     = c_balance = c_balance - @h_amount,
                    c_payment_cnt  = c_payment_cnt + 1,
                    c_ytd_payment  = c_ytd_payment + @h_amount,
                    @c_first       = c_first,
                    @c_middle      = c_middle,
              @c_last        = c_last,
              @c_street_1    = c_street_1,
                    @c_street_2    = c_street_2,
                    @c_city        = c_city,
                    @c_state       = c_state,
                    @c_zip         = c_zip,
                    @c_phone       = c_phone,
                    @c_credit      = c_credit,
                    @c_credit_lim  = c_credit_lim,
                    @c_discount    = c_discount,
                    @c_since       = c_since,
                    @data          = c_data,
                    @c_id_local    = c_id
          where c_id   = @c_id and
                    c_w_id = @c_w_id and
                    c_d_id = @c_d_id

--  if customer has bad credit get some more info

          if (@c_credit = "BC")
          begin

--        compute new info

                    select @c_data = convert(char(5),@c_id) +
                                                 convert(char(4),@c_d_id) +
                                          convert(char(5),@c_w_id) +
                                          convert(char(4),@d_id) +
                                          convert(char(5),@w_id) +
                                          convert(char(19),@h_amount) +
                                          substring(@data, 1, 458)

--  update customer info

                    update customer set
                              c_data = @c_data
                    where c_id   = @c_id and
                                c_w_id = @c_w_id and
                          c_d_id = @c_d_id

                    select @screen_data = substring (@c_data,1,200)
          end

--  get district data and update year-to-date

          update district
          set d_ytd       = d_ytd + @h_amount,
                    @d_street_1 = d_street_1,
                    @d_street_2 = d_street_2,
                    @d_city     = d_city,
                    @d_state    = d_state,
                    @d_zip      = d_zip,
                    @d_name     = d_name,
                    @d_id_local = d_id
          where d_w_id = @w_id and
                d_id   = @d_id

--  get warehouse data and update year-to-date

          update warehouse
          set w_ytd       = w_ytd + @h_amount,
                    @w_street_1 = w_street_1,
              @w_street_2 = w_street_2,
              @w_city     = w_city,
              @w_state    = w_state,
              @w_zip      = w_zip,
              @w_name     = w_name,
                    @w_id_local = w_id
          where w_id = @w_id

--  create history record

          insert into history values  (@c_id_local,
                                                                                    @c_d_id,
                                                                                          @c_w_id,

@d_id_local,
```

```
@w_id_local,

@datetime,

@h_amount,                                                                  @w_name

+ "    " + @d_name)

commit tran p

--  return data to client

select  @c_id,
                    @c_last,
                    @datetime,
                    @w_street_1,
                    @w_street_2,
                    @w_city,
                    @w_state,
                    @w_zip,
                    @d_street_1,
                    @d_street_2,
                    @d_city,
                    @d_state,
                    @d_zip,
                    @c_first,
                    @c_middle,
                    @c_street_1,
                    @c_street_2,
                    @c_city,
                    @c_state,
                    @c_zip,
                    @c_phone,
                    @c_since,
                    @c_credit,
                    @c_credit_lim,
                    @c_discount,
                    @c_balance,
                    @screen_data

go
```

ordstat.sql

```
--  File:     ORDSTAT.SQL
--            Microsoft TPC-C Benchmark Kit Ver. 4.00
--            Copyright Microsoft, 1996
--  Purpose:  Creates order status transaction stored procedure


use tpcc
go

if exists ( select name from sysobjects where name = "tpcc_orderstatus" )
          drop procedure   tpcc_orderstatus
go

create proc tpcc_orderstatus @w_id                smallint,
                                                                            @d_id

          tinyint,                                                          @c_id

          int,                                                              @c_last  char(16)

= ""

as

declare @c_balance            numeric(12,2),
        @c_first              char(16),
        @c_middle             char(2),
        @o_id                           int,
        @o_entry_d            datetime,
        @o_carrier_id         smallint,
        @cnt                            smallint

begin tran o

          if (@c_id = 0)
                    begin

--  get customer id and info using last name

                    select @cnt = (count(*)+1)/2
                    from customer (repeatableread)
                    where c_last = @c_last and
                      c_w_id = @w_id and
                      c_d_id = @d_id

                    set rowcount @cnt

                    select @c_id = c_id,
                                 @c_balance = c_balance,
                                 @c_first   = c_first,
                                 @c_last    = c_last,
                                 @c_middle  = c_middle
                    from customer (repeatableread)
                    where c_last = @c_last and
                      c_w_id = @w_id and
                      c_d_id = @d_id
                    order by c_w_id, c_d_id, c_last, c_first

                    set rowcount 0
                    end

          else
                    begin

--  get customer info if by id

                    select @c_balance = c_balance,
                           @c_first   = c_first,
                           @c_middle  = c_middle,
                           @c_last    = c_last
                    from customer (repeatableread)
                    where c_id   = @c_id and
                          c_d_id = @d_id and
                          c_w_id = @w_id

                    select @cnt = @@rowcount

                    end
```

```
--  if no such customer

          if (@cnt = 0)
          begin
                    raiserror("Customer not found",18,1)
                    goto custnotfound
          end

--  get order info

          select @o_id = o_id,
                       @o_entry_d    = o_entry_d,
             @o_carrier_id = o_carrier_id
          from orders (serializable)
          where o_c_id = @c_id and
          o_d_id = @d_id and
          o_w_id = @w_id
          order by o_id asc

--  select order lines for the current order

          select ol_supply_w_id,
             ol_i_id,
                 ol_quantity,
                 ol_amount,
                 ol_delivery_d
          from order_line (repeatableread)
          where ol_o_id = @o_id and
                ol_d_id = @d_id and
                ol_w_id = @w_id

custnotfound:

commit tran o

--  return data to client

select @c_id,
             @c_last,
             @c_first,
             @c_middle,
             @o_entry_d,
             @o_carrier_id,
             @c_balance,
             @o_id

go
```

delivery.sql

```
--  File:     DELIVERY.SQL
--            Microsoft TPC-C Benchmark Kit Ver. 4.00
--            Copyright Microsoft, 1996
--  Purpose:  Creates delivery transaction stored procedure

use tpcc
go

if exists (select name from sysobjects where name = "tpcc_delivery" )
          drop procedure tpcc_delivery
go

create proc tpcc_delivery     @w_id           smallint,

                                                                  @o_carrier_id   smallint
as

declare @d_id tinyint,
        @o_id int,
        @c_id int,
        @total numeric(12,2),
        @oid1 int,
        @oid2 int,
        @oid3 int,
        @oid4 int,
        @oid5 int,
        @oid6 int,
        @oid7 int,
        @oid8 int,
        @oid9 int,
        @oid10 int

select @d_id = 0

begin tran d

    while (@d_id < 10)
    begin

        select @d_id  = @d_id + 1,
               @total = 0,
               @o_id  = 0

                     select top 1 @o_id = no_o_id
                     from new_order (serializable updlock)
        where no_w_id = @w_id and
                           no_d_id = @d_id
                     order by no_o_id asc

        if (@@rowcount <> 0)
        begin

--  claim the order for this district

            delete new_order
            where no_w_id = @w_id and
                                no_d_id = @d_id and
                                      no_o_id = @o_id

--  set carrier_id on this order (and get customer id)

            update orders
                        set o_carrier_id = @o_carrier_id,
                @c_id        = o_c_id
            where o_w_id = @w_id and
                                o_d_id = @d_id and
                                      o_id   = @o_id
```

```
--  set date in all lineitems for this order (and sum amounts)

            update order_line
                        set ol_delivery_d = getdate(),
                      @total        = @total + ol_amount
            where ol_w_id = @w_id and
                  ol_d_id = @d_id and
                              ol_o_id = @o_id

--  accummulate lineitem amounts for this order into customer

                        update customer
                              set c_balance      = c_balance + @total,
                                  c_delivery_cnt = c_delivery_cnt + 1
            where c_w_id = @w_id and
                              c_d_id = @d_id and
                                    c_id   = @c_id

        end

        select @oid1 = case @d_id when  1  then @o_id else @oid1 end,
               @oid2 = case @d_id when  2  then @o_id else @oid2 end,
               @oid3 = case @d_id when  3  then @o_id else @oid3 end,
               @oid4 = case @d_id when  4  then @o_id else @oid4 end,
               @oid5 = case @d_id when  5  then @o_id else @oid5 end,
               @oid6 = case @d_id when  6  then @o_id else @oid6 end,
               @oid7 = case @d_id when  7  then @o_id else @oid7 end,
               @oid8 = case @d_id when  8  then @o_id else @oid8 end,
               @oid9 = case @d_id when  9  then @o_id else @oid9 end,
               @oid10 = case @d_id when 10 then @o_id else @oid10 end

    end

commit tran d

-- return delivery data to client

select @oid1,
       @oid2,
       @oid3,
       @oid4,
       @oid5,
       @oid6,
       @oid7,
       @oid8,
       @oid9,
       @oid10

go
```

stocklev.sql

```
--  File:     STOCKLEV.SQL
--            Microsoft TPC-C Benchmark Kit Ver. 4.00
--            Copyright Microsoft, 1996
--  Purpose:  Creates stock level transaction stored procedure


use tpcc
go
if exists (select name from sysobjects where name = "tpcc_stocklevel" )
          drop procedure tpcc_stocklevel
go

create proc tpcc_stocklevel   @w_id               smallint,
                                                            @d_id               tinyint,
                                                            @threshhold         smallint
as

          declare @o_id_low int,
                        @o_id_high int

    select @o_id_low  = (d_next_o_id - 20),
                  @o_id_high = (d_next_o_id - 1)
    from district
    where d_w_id = @w_id and
                      d_id   = @d_id

    select count(distinct(s_i_id))
          from  stock, order_line
    where ol_w_id    =  @w_id and
                ol_d_id    =  @d_id and
                ol_o_id between @o_id_low and @o_id_high and
          s_w_id     =  ol_w_id and
                s_i_id     =  ol_i_id and
                s_quantity <  @threshhold

go
```

Loader Source Code

tpcc.h

```
//        File:               TPCC.H
//                                    Microsoft TPC-C Kit Ver. 4.00
//                                    Copyright Microsoft, 1996, 1997, 1998

//        Purpose:  Header file for TPC-C database loader


// Build number of TPC Benchmark Kit
#define TPCKIT_VER  "4.00"

// General headers
#include <windows.h>
#include <winbase.h>
#include <stdlib.h>
#include <stdio.h>
#include <process.h>
#include <stddef.h>
#include <stdarg.h>
#include <string.h>
```

```
#include <time.h>
#include <sys\timeb.h>
#include <sys\types.h>

// ODBC headers
#include <sql.h>
#include <sqlext.h>
#include <odbcss.h>

// General constants
#define MILLI                           1000
#define FALSE                                   0
#define TRUE                                    1
#define UNDEF                                                   -1
#define MINPRINTASCII                              32
#define MAXPRINTASCII                             126

// Default environment constants
#define SERVER                                  ""
#define DATABASE                                "tpcc"
#define USER                                    "sa"
#define PASSWORD                           ""

// Default loader arguments
#define BATCH                          10000
#define DEFLDPACKSIZE                           32768
#define ORDERS_PER_DIST                 3000
#define LOADER_RES_FILE                  "logs\\load.out"
#define LOADER_NURAND_C                            123
#define DEF_STARTING_WAREHOUSE                  1
#define BUILD_INDEX                                     1         // build both data
and indexes
#define INDEX_ORDER                                     1         // build indexes
before load
#define SCALE_DOWN                                      0   // build a normal scale
database
#define INDEX_SCRIPT_PATH     "scripts"

typedef struct
{
    char                                        *server;
    char                                        *database;
    char                                        *user;
    char                                        *password;
          BOOL                                  tables_all;
          // set if loading all tables
          BOOL                                  table_item;
          // set if loading ITEM table specifically
          BOOL                                  table_warehouse;    // set if loading
WAREHOUSE, DISTRICT, and STOCK
          BOOL                                  table_customer;               // set if
loading CUSTOMER and HISTORY
          BOOL                                  table_orders;                 // set if
loading NEW-ORDER, ORDERS, ORDER-LINE
    long                                        num_warehouses;
    long                                        batch;
    long                                        verbose;
          long                                  pack_size;
          char                                  *loader_res_file;
          char                                  *synch_servername;
          long                                  case_sensitivity;
          long                                  starting_warehouse;
          long                                  build_index;
          long                                  index_order;
          long                                  scale_down;
          char                                  *index_script_path;
} TPCCLDR_ARGS;

// String length constants
          #define SERVER_NAME_LEN            20
          #define DATABASE_NAME_LEN          20
          #define USER_NAME_LEN              20
          #define PASSWORD_LEN               20
          #define TABLE_NAME_LEN             20
          #define I_DATA_LEN                 50
          #define I_NAME_LEN                 24
          #define BRAND_LEN                   1
          #define LAST_NAME_LEN              16
          #define W_NAME_LEN                 10
          #define ADDRESS_LEN                20
          #define STATE_LEN                   2
          #define ZIP_LEN                     9
          #define S_DIST_LEN                 24
          #define S_DATA_LEN                 50
          #define D_NAME_LEN                 10
          #define FIRST_NAME_LEN             16
          #define MIDDLE_NAME_LEN             2
          #define PHONE_LEN                  16
          #define CREDIT_LEN                  2
          #define C_DATA_LEN                 500
          #define H_DATA_LEN                 24
          #define DIST_INFO_LEN              24
          #define MAX_OL_NEW_ORDER_ITEMS     15
          #define MAX_OL_ORDER_STATUS_ITEMS  15
          #define STATUS_LEN                 25
          #define OL_DIST_INFO_LEN                   24
          #define C_SINCE_LEN                                     23
          #define H_DATE_LEN                                      23
          #define OL_DELIVERY_D_LEN                  23
          #define O_ENTRY_D_LEN              23


// Functions in random.c
void      seed();
long      irand();
double    drand();
void      WUCreate();
short     WURand();
long      RandomNumber(long lower, long upper);

// Functions in getargs.c;
void      GetArgsLoader();
void      GetArgsLoaderUsage();

// Functions in time.c
long      TimeNow();

// Functions in strings.c
void      MakeAddress();
void      LastName();
int       MakeAlphaString();
int       MakeOriginalAlphaString();
int       MakeNumberString();
int       MakeZipNumberString();
void      InitString();
void      InitAddress();
```

```
void      PaddString();
```

tpccldr.c

```
//        File:               TPCCLDR.C
//                                    Microsoft TPC-C Kit Ver. 4.00
//                                    Copyright Microsoft, 1996, 1997, 1998
//        Purpose:  Source file for TPC-C database loader


// Includes
#include "tpcc.h"
#include "search.h"

// Defines
#define MAXITEMS                100000
#define MAXITEMS_SCALE_DOWN             100
#define CUSTOMERS_PER_DISTRICT  3000
#define CUSTOMERS_SCALE_DOWN  30
#define DISTRICT_PER_WAREHOUSE  10
#define ORDERS_PER_DISTRICT     3000
#define ORDERS_SCALE_DOWN       30
#define MAX_CUSTOMER_THREADS    2
#define MAX_ORDER_THREADS       3
#define MAX_MAIN_THREADS        4

// Functions declarations

void HandleErrorDBC (SQLHDBC  hdbc1);

long NURand();
void LoadItem();
void LoadWarehouse();

void Stock();
void District();

void LoadCustomer();
void CustomerBufInit();
void CustomerBufLoad();
void LoadCustomerTable();
void LoadHistoryTable();

void LoadOrders();
void OrdersBufInit();
void OrdersBufLoad();
void LoadOrdersTable();
void LoadNewOrderTable();
void LoadOrderLineTable();
void GetPermutation();
void CheckForCommit();
void OpenConnections();
void BuildIndex();
void FormatDate ();
```

```
// Shared memory structures

typedef struct
{
    long                ol;
    long                ol_i_id;
    short               ol_supply_w_id;
    short               ol_quantity;
    double              ol_amount;
    char                ol_dist_info[DIST_INFO_LEN+1];
          char                                      ol_delivery_d[OL_DELIVERY_D_LEN+1];
} ORDER_LINE_STRUCT;

typedef struct
{
    long                o_id;
    short               o_d_id;
    short               o_w_id;
    long                o_c_id;
    short               o_carrier_id;
    short               o_ol_cnt;
    short               o_all_local;
          ORDER_LINE_STRUCT   o_ol[15];
} ORDERS_STRUCT;

typedef struct
{
    long                                  c_id;
    short                                 c_d_id;
    short                                 c_w_id;
          char                                      c_first[FIRST_NAME_LEN+1];
    char                                  c_middle[MIDDLE_NAME_LEN+1];
    char                                  c_last[LAST_NAME_LEN+1];
    char                                  c_street_1[ADDRESS_LEN+1];
    char                                  c_street_2[ADDRESS_LEN+1];
    char                                  c_city[ADDRESS_LEN+1];
    char                                  c_state[STATE_LEN+1];
    char                                  c_zip[ZIP_LEN+1];
    char                                  c_phone[PHONE_LEN+1];
    char                                  c_credit[CREDIT_LEN+1];
    double                                      c_credit_lim;
    double                                      c_discount;
//  fix to avoid ODBC float to numeric conversion problem.
//  double                                      c_balance;
          char                                  c_balance[6];

    double                                      c_ytd_payment;
          short                                 c_payment_cnt;
          short                                 c_delivery_cnt;
          char                                  c_data[C_DATA_LEN+1];
          double                                h_amount;
    char                                  h_data[H_DATA_LEN+1];
} CUSTOMER_STRUCT;

typedef struct
{
          char                                  c_last[LAST_NAME_LEN+1];
          char                                  c_first[FIRST_NAME_LEN+1];
    long                                  c_id;
} CUSTOMER_SORT_STRUCT;

typedef struct
{
```


Copyright Dell

```
    long                time_start;
} LOADER_TIME_STRUCT;


// Global variables

char      szLastError[300];

HENV      henv;

HDBC      i_hdbc1;                                        // for ITEM table
HDBC      w_hdbc1;                                        // for WAREHOUSE, DISTRICT,
STOCK
HDBC      c_hdbc1;                                        // for CUSTOMER
HDBC      c_hdbc2;                                        // for HISTORY
HDBC      o_hdbc1;                                        // for ORDERS
HDBC      o_hdbc2;                                        // for NEW-ORDER

HDBC      o_hdbc3;                                        // for ORDER-LINE

HSTMT     i_hstmt1;
HSTMT     w_hstmt1;
HSTMT     c_hstmt1, c_hstmt2;
HSTMT     o_hstmt1, o_hstmt2, o_hstmt3;

ORDERS_STRUCT   orders_buf[ORDERS_PER_DISTRICT];
CUSTOMER_STRUCT customer_buf[CUSTOMERS_PER_DISTRICT];
long            orders_rows_loaded;
long            new_order_rows_loaded;
long            order_line_rows_loaded;
long            history_rows_loaded;
long            customer_rows_loaded;
long            stock_rows_loaded;
long            district_rows_loaded;
long            item_rows_loaded;
long            warehouse_rows_loaded;
long            main_time_start;
long            main_time_end;
long                          max_items;
long                          customers_per_district;
long                          orders_per_district;
long                          first_new_order;
long                          last_new_order;


TPCCLDR_ARGS    *aptr, args;


//=====================================================================
//
// Function name: main
//
//=====================================================================

int main(int  argc, char **argv)
{

          DWORD           dwThreadID[MAX_MAIN_THREADS];
          HANDLE          hThread[MAX_MAIN_THREADS];
          FILE            *fLoader;
          char            buffer[255];
          int                                     i;

      for (i=0; i<MAX_MAIN_THREADS; i++)
                hThread[i] = NULL;

printf("\n*****************************************************");
      printf("\n*                                                 *");
      printf("\n*  Microsoft SQL Server                           *");
      printf("\n*                                                 *");
      printf("\n*  TPC-C BENCHMARK KIT:  Database loader          *");
      printf("\n*  Version %s                                   *", TPCKIT_VER);
      printf("\n*                                                 *");
      printf("\n*****************************************************\n\n");

// process command line arguments

aptr = &args;
GetArgsLoader(argc, argv, aptr);

      printf("Build interface is ODBC.\n");

      if (aptr->build_index == 0)
                printf("Data load only - no index creation.\n");
      else
                printf("Data load and index creation.\n");

      if (aptr->index_order == 0)
                printf("Clustered indexes will be created after bulk load.\n");
      else
                printf("Clustered indexes will be created before bulk load.\n");

      // set database scale values
      if (aptr->scale_down == 1)
      {
                printf("*** Scaled Down Database ***\n");
                max_items = MAXITEMS_SCALE_DOWN;
                customers_per_district = CUSTOMERS_SCALE_DOWN;
                orders_per_district = ORDERS_SCALE_DOWN;
                first_new_order = 0;
                last_new_order  = 30;
      }
      else
      {
                max_items = MAXITEMS;
                customers_per_district = CUSTOMERS_PER_DISTRICT;
                orders_per_district = ORDERS_PER_DISTRICT;
                first_new_order = 2100;
                last_new_order  = 3000;
      }

      // open connections to SQL Server

      OpenConnections();

      // open file for loader results
fLoader = fopen(aptr->loader_res_file, "w");

if (fLoader == NULL)
      {
                printf("Error, loader result file open failed.");
                exit(-1);
      }

// start loading data
```


Copyright Dell

```
    sprintf(buffer,"TPC-C load started for %ld warehouses.\n",aptr->num_warehouses);

          printf("%s",buffer);
          fprintf(fLoader,"%s",buffer);

          main_time_start = (TimeNow() / MILLI);

          // start parallel load threads


          if (aptr->tables_all || aptr->table_item)
          {
                    fprintf(fLoader, "\nStarting loader threads for: item\n");

                    hThread[0] = CreateThread(NULL,
                                                                                                0,

(LPTHREAD_START_ROUTINE) LoadItem,
                                                                                                NULL,
                                                                                                0,

&dwThreadID[0]);

                    if (hThread[0] == NULL)
                    {
                              printf("Error, failed in creating creating thread = 0.\n");
                              exit(-1);
                    }
          }

          if (aptr->tables_all || aptr->table_warehouse)
          {
                    fprintf(fLoader, "Starting loader threads for: warehouse\n");

                    hThread[1] = CreateThread(NULL,
                                                                                                0,

(LPTHREAD_START_ROUTINE) LoadWarehouse,
                                                                                                NULL,
                                                                                                0,

&dwThreadID[1]);

                    if (hThread[1] == NULL)
                    {
                              printf("Error, failed in creating creating thread = 1.\n");
                              exit(-1);
                    }
          }

          if (aptr->tables_all || aptr->table_customer)
          {
                    fprintf(fLoader, "Starting loader threads for: customer\n");

                    hThread[2] = CreateThread(NULL,
                                                                                                0,

(LPTHREAD_START_ROUTINE) LoadCustomer,
                                                                                                NULL,
                                                                                                0,

&dwThreadID[2]);

                    if (hThread[2] == NULL)
                    {
                              printf("Error, failed in creating creating main thread =
2.\n");
                              exit(-1);
                    }
          }

          if (aptr->tables_all || aptr->table_orders)
          {
                    fprintf(fLoader, "Starting loader threads for: orders\n");

                    hThread[3] = CreateThread(NULL,
                                                                                                0,

(LPTHREAD_START_ROUTINE) LoadOrders,
                                                                                                NULL,
                                                                                                0,

&dwThreadID[3]);

                    if (hThread[3] == NULL)
                    {
                              printf("Error, failed in creating creating main thread =
3.\n");
                              exit(-1);
                    }
          }

          // Wait for threads to finish...
          for (i=0; i<MAX_MAIN_THREADS; i++)
          {
                    if (hThread[i] != NULL)
                    {
                              WaitForSingleObject( hThread[i], INFINITE );
                              CloseHandle(hThread[i]);
                              hThread[i] = NULL;
                    }
          }

          main_time_end = (TimeNow() / MILLI);

    sprintf(buffer,"\nTPC-C load completed successfully in %ld minutes.\n",
                              (main_time_end - main_time_start)/60);

          printf("%s",buffer);
          fprintf(fLoader, "%s", buffer);

          fclose(fLoader);

          SQLFreeEnv(henv);

    exit(0);

          return 0;
}


//=====================================================================
//
// Function name: LoadItem
//
//=====================================================================
```

```
void LoadItem()
{
    long            i_id;
          long                i_im_id;
    char            i_name[I_NAME_LEN+1];
    double                    i_price;
    char            i_data[I_DATA_LEN+1];
          char                name[20];
          long                time_start;
          RETCODE             rc;
          DBINT               rcint;
          char                bcphint[128];

          // Seed with unique number
          seed(1);

          printf("Loading item table...\n");

          // if build index before load
          if ((aptr->build_index == 1) && (aptr->index_order == 1))
                    BuildIndex("idxitmcl");

          InitString(i_name, I_NAME_LEN+1);
          InitString(i_data, I_DATA_LEN+1);

          sprintf(name, "%s..%s", aptr->database, "item");

          rc = bcp_init(i_hdbc1, name, NULL, "logs\\item.err", DB_IN);
          if (rc != SUCCEED)
                    HandleErrorDBC(i_hdbc1);

          if ((aptr->build_index == 1) && (aptr->index_order == 1))
          {
                    sprintf(bcphint, "tablock, order (i_id), ROWS_PER_BATCH = 100000");
                    rc = bcp_control(i_hdbc1, BCPHINTS, (void*) bcphint);
                    if (rc != SUCCEED)
                              HandleErrorDBC(i_hdbc1);
          }

          rc = bcp_bind(i_hdbc1, (BYTE *) &i_id, 0, SQL_VARLEN_DATA, NULL, 0, SQLINT4,
1);
          if (rc != SUCCEED)
                    HandleErrorDBC(i_hdbc1);

          rc = bcp_bind(i_hdbc1, (BYTE *) &i_im_id, 0, SQL_VARLEN_DATA, NULL, 0, SQLINT4,
2);
          if (rc != SUCCEED)
                    HandleErrorDBC(i_hdbc1);

          rc = bcp_bind(i_hdbc1, (BYTE *) i_name, 0, I_NAME_LEN, NULL, 0, 0, 3);
          if (rc != SUCCEED)
                    HandleErrorDBC(i_hdbc1);

          rc = bcp_bind(i_hdbc1, (BYTE *) &i_price, 0, SQL_VARLEN_DATA, NULL, 0, SQLFLT8,
4);
          if (rc != SUCCEED)
                    HandleErrorDBC(i_hdbc1);

          rc = bcp_bind(i_hdbc1, (BYTE *) i_data, 0, I_DATA_LEN, NULL, 0, 0, 5);
          if (rc != SUCCEED)
                    HandleErrorDBC(i_hdbc1);

          time_start = (TimeNow() / MILLI);

          item_rows_loaded = 0;

          for (i_id = 1; i_id <= max_items; i_id++)
          {
                    i_im_id = RandomNumber(1L, 10000L);

                    MakeAlphaString(14, 24, I_NAME_LEN, i_name);

                    i_price = ((float) RandomNumber(100L, 10000L))/100.0;

                    MakeOriginalAlphaString(26, 50, I_DATA_LEN, i_data, 10);

                    rc = bcp_sendrow(i_hdbc1);
                    if (rc != SUCCEED)
                              HandleErrorDBC(i_hdbc1);

                    item_rows_loaded++;
                    CheckForCommit(i_hdbc1, i_hstmt1, item_rows_loaded, "item",
&time_start);
          }

          rcint = bcp_done(i_hdbc1);
          if (rcint < 0)
                    HandleErrorDBC(i_hdbc1);

          printf("Finished loading item table.\n");

          SQLFreeStmt(i_hstmt1, SQL_DROP);
          SQLDisconnect(i_hdbc1);
          SQLFreeConnect(i_hdbc1);

          // if build index after load
          if ((aptr->build_index == 1) && (aptr->index_order == 0))
                    BuildIndex("idxitmcl");

}


//==============================================================================
//
// Function   : LoadWarehouse
//
// Loads WAREHOUSE table and loads Stock and District as Warehouses are created
//
//==============================================================================

void LoadWarehouse()
{
    short w_id;
    char  w_name[W_NAME_LEN+1];
    char  w_street_1[ADDRESS_LEN+1];
    char  w_street_2[ADDRESS_LEN+1];
    char  w_city[ADDRESS_LEN+1];
    char  w_state[STATE_LEN+1];
    char  w_zip[ZIP_LEN+1];
    double          w_tax;
    double          w_ytd;
          char      name[20];
          long      time_start;
          RETCODE   rc;
          DBINT     rcint;
```

```
        char      bcphint[128];


        // Seed with unique number
        seed(2);

        printf("Loading warehouse table...\n");

        // if build index before load...
        if ((aptr->build_index == 1) && (aptr->index_order == 1))
                  BuildIndex("idxwarcl");

        InitString(w_name, W_NAME_LEN+1);
        InitAddress(w_street_1, w_street_2, w_city, w_state, w_zip);

        sprintf(name, "%s..%s", aptr->database, "warehouse");

        rc = bcp_init(w_hdbc1, name, NULL, "logs\\whouse.err", DB_IN);
        if (rc != SUCCEED)
                  HandleErrorDBC(w_hdbc1);

        if ((aptr->build_index == 1) && (aptr->index_order == 1))
        {
                  sprintf(bcphint, "tablock, order (w_id), ROWS_PER_BATCH = %d", aptr-
>num_warehouses);
                  rc = bcp_control(w_hdbc1, BCPHINTS, (void*) bcphint);
                  if (rc != SUCCEED)
                            HandleErrorDBC(w_hdbc1);
        }

        rc = bcp_bind(w_hdbc1, (BYTE *) &w_id, 0, SQL_VARLEN_DATA, NULL, 0, SQLINT2,
1);
        if (rc != SUCCEED)
                  HandleErrorDBC(w_hdbc1);

        rc = bcp_bind(w_hdbc1, (BYTE *) w_name, 0, W_NAME_LEN, NULL, 0, 0, 2);
        if (rc != SUCCEED)
                  HandleErrorDBC(w_hdbc1);

        rc = bcp_bind(w_hdbc1, (BYTE *) w_street_1, 0, ADDRESS_LEN, NULL, 0, 0, 3);
        if (rc != SUCCEED)
                  HandleErrorDBC(w_hdbc1);

        rc = bcp_bind(w_hdbc1, (BYTE *) w_street_2, 0, ADDRESS_LEN, NULL, 0, 0, 4);
        if (rc != SUCCEED)
                  HandleErrorDBC(w_hdbc1);

        rc = bcp_bind(w_hdbc1, (BYTE *) w_city, 0, ADDRESS_LEN, NULL, 0, 0, 5);
        if (rc != SUCCEED)
                  HandleErrorDBC(w_hdbc1);

        rc = bcp_bind(w_hdbc1, (BYTE *) w_state, 0, STATE_LEN, NULL, 0, 0, 6);
        if (rc != SUCCEED)
                  HandleErrorDBC(w_hdbc1);

        rc = bcp_bind(w_hdbc1, (BYTE *) w_zip, 0, ZIP_LEN, NULL, 0, 0, 7);
        if (rc != SUCCEED)
                  HandleErrorDBC(w_hdbc1);

        rc = bcp_bind(w_hdbc1, (BYTE *) &w_tax, 0, SQL_VARLEN_DATA, NULL, 0, SQLFLT8,
8);
        if (rc != SUCCEED)
                  HandleErrorDBC(w_hdbc1);

        rc = bcp_bind(w_hdbc1, (BYTE *) &w_ytd, 0, SQL_VARLEN_DATA, NULL, 0, SQLFLT8,
9);
        if (rc != SUCCEED)
                  HandleErrorDBC(w_hdbc1);

        time_start = (TimeNow() / MILLI);

        warehouse_rows_loaded = 0;

        for (w_id = (short)aptr->starting_warehouse; w_id <= aptr->num_warehouses;
w_id++)
        {
                  MakeAlphaString(6,10, W_NAME_LEN, w_name);

                  MakeAddress(w_street_1, w_street_2, w_city, w_state, w_zip);

                  w_tax = ((float) RandomNumber(0L,2000L))/10000.00;

                  w_ytd = 300000.00;

                  rc = bcp_sendrow(w_hdbc1);
                  if (rc != SUCCEED)
                            HandleErrorDBC(w_hdbc1);

                  warehouse_rows_loaded++;
                  CheckForCommit(w_hdbc1, i_hstmt1, warehouse_rows_loaded, "warehouse",
&time_start);
        }

        rcint = bcp_done(w_hdbc1);
        if (rcint < 0)
                  HandleErrorDBC(w_hdbc1);

        printf("Finished loading warehouse table.\n");

        // if build index after load...
        if ((aptr->build_index == 1) && (aptr->index_order == 0))
                  BuildIndex("idxwarcl");

        stock_rows_loaded = 0;
        district_rows_loaded = 0;

        District();
        Stock();

}


//=====================================================================
//
// Function   : District
//
//=====================================================================

void District()
{
    short d_id;
    short d_w_id;
    char  d_name[D_NAME_LEN+1];
    char  d_street_1[ADDRESS_LEN+1];
    char  d_street_2[ADDRESS_LEN+1];
    char  d_city[ADDRESS_LEN+1];
```

```
    char  d_state[STATE_LEN+1];
    char  d_zip[ZIP_LEN+1];
    double          d_tax;
    double          d_ytd;
          char      name[20];
    long  d_next_o_id;
          long      time_start;
          int                 w_id;
          RETCODE   rc;
          DBINT     rcint;
          char      bcphint[128];

          // Seed with unique number
          seed(4);

          printf("Loading district table...\n");

          // build index before load
          if ((aptr->build_index == 1) && (aptr->index_order == 1))
                    BuildIndex("idxdiscl");

          InitString(d_name, D_NAME_LEN+1);
          InitAddress(d_street_1, d_street_2, d_city, d_state, d_zip);
          sprintf(name, "%s..%s", aptr->database, "district");

          rc = bcp_init(w_hdbc1, name, NULL, "logs\\district.err", DB_IN);
          if (rc != SUCCEED)
                    HandleErrorDBC(w_hdbc1);

          if ((aptr->build_index == 1) && (aptr->index_order == 1))
          {
                    sprintf(bcphint, "tablock, order (d_w_id, d_id), ROWS_PER_BATCH =
%u", (aptr->num_warehouses * 10));
                    rc = bcp_control(w_hdbc1, BCPHINTS, (void*) bcphint);
                    if (rc != SUCCEED)
                              HandleErrorDBC(w_hdbc1);
          }

          rc = bcp_bind(w_hdbc1, (BYTE *) &d_id, 0, SQL_VARLEN_DATA, NULL, 0, SQLINT2,
1);
          if (rc != SUCCEED)
                    HandleErrorDBC(w_hdbc1);

          rc = bcp_bind(w_hdbc1, (BYTE *) &d_w_id, 0, SQL_VARLEN_DATA, NULL, 0, SQLINT2,
2);
          if (rc != SUCCEED)
                    HandleErrorDBC(w_hdbc1);

          rc = bcp_bind(w_hdbc1, (BYTE *) d_name, 0, D_NAME_LEN, NULL, 0, 0, 3);
          if (rc != SUCCEED)
                    HandleErrorDBC(w_hdbc1);

          rc = bcp_bind(w_hdbc1, (BYTE *) d_street_1, 0, ADDRESS_LEN, NULL, 0, 0, 4);
          if (rc != SUCCEED)
                    HandleErrorDBC(w_hdbc1);

          rc = bcp_bind(w_hdbc1, (BYTE *) d_street_2, 0, ADDRESS_LEN, NULL, 0, 0, 5);
          if (rc != SUCCEED)
                    HandleErrorDBC(w_hdbc1);

          rc = bcp_bind(w_hdbc1, (BYTE *) d_city, 0, ADDRESS_LEN, NULL, 0, 0, 6);
          if (rc != SUCCEED)
                    HandleErrorDBC(w_hdbc1);

          rc = bcp_bind(w_hdbc1, (BYTE *) d_state, 0, STATE_LEN, NULL, 0, 0, 7);
          if (rc != SUCCEED)
                    HandleErrorDBC(w_hdbc1);

          rc = bcp_bind(w_hdbc1, (BYTE *) d_zip, 0, ZIP_LEN, NULL, 0, 0, 8);
          if (rc != SUCCEED)
                    HandleErrorDBC(w_hdbc1);

          rc = bcp_bind(w_hdbc1, (BYTE *) &d_tax, 0, SQL_VARLEN_DATA, NULL, 0, SQLFLT8,
9);
          if (rc != SUCCEED)
                    HandleErrorDBC(w_hdbc1);

          rc = bcp_bind(w_hdbc1, (BYTE *) &d_ytd, 0, SQL_VARLEN_DATA, NULL, 0, SQLFLT8,
10);
          if (rc != SUCCEED)
                    HandleErrorDBC(w_hdbc1);

          rc = bcp_bind(w_hdbc1, (BYTE *) &d_next_o_id, 0, SQL_VARLEN_DATA, NULL, 0,
SQLINT4, 11);
          if (rc != SUCCEED)
                    HandleErrorDBC(w_hdbc1);

          d_ytd  = 30000.0;

          d_next_o_id = orders_per_district+1;

          time_start = (TimeNow() / MILLI);

          for (w_id = aptr->starting_warehouse; w_id <= aptr->num_warehouses; w_id++)
          {
                    d_w_id = w_id;

                    for (d_id = 1; d_id <= DISTRICT_PER_WAREHOUSE; d_id++)
                    {
                              MakeAlphaString(6,10,D_NAME_LEN, d_name);

                              MakeAddress(d_street_1, d_street_2, d_city, d_state,
d_zip);

                              d_tax = ((float) RandomNumber(0L,2000L))/10000.00;

                              rc = bcp_sendrow(w_hdbc1);
                              if (rc != SUCCEED)
                                        HandleErrorDBC(w_hdbc1);

                              district_rows_loaded++;
                              CheckForCommit(w_hdbc1, w_hstmt1, district_rows_loaded,
"district", &time_start);
                    }
    }

          rcint = bcp_done(w_hdbc1);
          if (rcint < 0)
                    HandleErrorDBC(w_hdbc1);

          printf("Finished loading district table.\n");

          // if build index after load...
          if ((aptr->build_index == 1) && (aptr->index_order == 0))
                    BuildIndex("idxdiscl");
```


Copyright Dell

```
    return;
}


//=========================================================================
//
// Function   : Stock
//
//=========================================================================

void Stock()
{
    long  s_i_id;
    short s_w_id;
    short s_quantity;
    char  s_dist_01[S_DIST_LEN+1];
    char  s_dist_02[S_DIST_LEN+1];
    char  s_dist_03[S_DIST_LEN+1];
    char  s_dist_04[S_DIST_LEN+1];
    char  s_dist_05[S_DIST_LEN+1];
    char  s_dist_06[S_DIST_LEN+1];
    char  s_dist_07[S_DIST_LEN+1];
    char  s_dist_08[S_DIST_LEN+1];
    char  s_dist_09[S_DIST_LEN+1];
    char  s_dist_10[S_DIST_LEN+1];
    long  s_ytd;
    short s_order_cnt;
    short s_remote_cnt;
    char  s_data[S_DATA_LEN+1];
    short len;
          char      name[20];
          long      time_start;
          RETCODE   rc;
          DBINT     rcint;
          char      bcphint[128];

          // Seed with unique number
          seed(3);

          // if build index before load...
          if ((aptr->build_index == 1) && (aptr->index_order == 1))
                    BuildIndex("idxstkcl");

          sprintf(name, "%s..%s", aptr->database, "stock");

          rc = bcp_init(w_hdbc1, name, NULL, "logs\\stock.err", DB_IN);
          if (rc != SUCCEED)
                    HandleErrorDBC(w_hdbc1);

          if ((aptr->build_index == 1) && (aptr->index_order == 1))
          {
                    sprintf(bcphint, "tablock, order (s_i_id, s_w_id), ROWS_PER_BATCH =
%u", (aptr->num_warehouses * 100000));
                    rc = bcp_control(w_hdbc1, BCPHINTS, (void*) bcphint);
                    if (rc != SUCCEED)
                              HandleErrorDBC(w_hdbc1);
          }

          rc = bcp_bind(w_hdbc1, (BYTE *) &s_i_id, 0, SQL_VARLEN_DATA, NULL, 0, SQLINT4,
1);
          if (rc != SUCCEED)
                    HandleErrorDBC(w_hdbc1);

          bcp_bind(w_hdbc1, (BYTE *) &s_w_id, 0, SQL_VARLEN_DATA, NULL, 0, SQLINT2, 2);
          if (rc != SUCCEED)
                    HandleErrorDBC(w_hdbc1);

          rc = bcp_bind(w_hdbc1, (BYTE *) &s_quantity, 0, SQL_VARLEN_DATA, NULL, 0,
SQLINT2, 3);
          if (rc != SUCCEED)
                    HandleErrorDBC(w_hdbc1);

          rc = bcp_bind(w_hdbc1, (BYTE *) s_dist_01, 0, S_DIST_LEN, NULL, 0, 0, 4);
          if (rc != SUCCEED)
                    HandleErrorDBC(w_hdbc1);

          rc = bcp_bind(w_hdbc1, (BYTE *) s_dist_02, 0, S_DIST_LEN, NULL, 0, 0, 5);
          if (rc != SUCCEED)
                    HandleErrorDBC(w_hdbc1);

          rc = bcp_bind(w_hdbc1, (BYTE *) s_dist_03, 0, S_DIST_LEN, NULL, 0, 0, 6);
          if (rc != SUCCEED)
                    HandleErrorDBC(w_hdbc1);

          rc = bcp_bind(w_hdbc1, (BYTE *) s_dist_04, 0, S_DIST_LEN, NULL, 0, 0, 7);
          if (rc != SUCCEED)
                    HandleErrorDBC(w_hdbc1);

          rc = bcp_bind(w_hdbc1, (BYTE *) s_dist_05, 0, S_DIST_LEN, NULL, 0, 0, 8);
          if (rc != SUCCEED)
                    HandleErrorDBC(w_hdbc1);

          rc = bcp_bind(w_hdbc1, (BYTE *) s_dist_06, 0, S_DIST_LEN, NULL, 0, 0, 9);
          if (rc != SUCCEED)
                    HandleErrorDBC(w_hdbc1);

          rc = bcp_bind(w_hdbc1, (BYTE *) s_dist_07, 0, S_DIST_LEN, NULL, 0, 0, 10);
          if (rc != SUCCEED)
                    HandleErrorDBC(w_hdbc1);

          rc = bcp_bind(w_hdbc1, (BYTE *) s_dist_08, 0, S_DIST_LEN, NULL, 0, 0, 11);
          if (rc != SUCCEED)
                    HandleErrorDBC(w_hdbc1);

          rc = bcp_bind(w_hdbc1, (BYTE *) s_dist_09, 0, S_DIST_LEN, NULL, 0, 0, 12);
          if (rc != SUCCEED)
                    HandleErrorDBC(w_hdbc1);

          rc = bcp_bind(w_hdbc1, (BYTE *) s_dist_10, 0, S_DIST_LEN, NULL, 0, 0, 13);
          if (rc != SUCCEED)
                    HandleErrorDBC(w_hdbc1);

          rc = bcp_bind(w_hdbc1, (BYTE *) &s_ytd, 0, SQL_VARLEN_DATA, NULL, 0, SQLINT4,
14);
          if (rc != SUCCEED)
                    HandleErrorDBC(w_hdbc1);

          rc = bcp_bind(w_hdbc1, (BYTE *) &s_order_cnt, 0, SQL_VARLEN_DATA, NULL, 0,
SQLINT2, 15);
          if (rc != SUCCEED)
                    HandleErrorDBC(w_hdbc1);

          rc = bcp_bind(w_hdbc1, (BYTE *) &s_remote_cnt, 0, SQL_VARLEN_DATA, NULL, 0,
SQLINT2, 16);
          if (rc != SUCCEED)
                    HandleErrorDBC(w_hdbc1);
```


Copyright Dell

```
	rc = bcp_bind(w_hdbc1, (BYTE *) s_data, 0, S_DATA_LEN, NULL, 0, 0, 17);
	if (rc != SUCCEED)
		HandleErrorDBC(w_hdbc1);

	s_ytd = s_order_cnt = s_remote_cnt = 0;

	time_start = (TimeNow() / MILLI);

	printf("...Loading stock table\n");

	for (s_i_id=1; s_i_id <= max_items; s_i_id++)
	{

		for (s_w_id = (short)aptr->starting_warehouse; s_w_id <= aptr-
>num_warehouses; s_w_id++)
		{
			s_quantity = (short)RandomNumber(10L,100L);
			len = MakeAlphaString(24,24,S_DIST_LEN, s_dist_01);
			len = MakeAlphaString(24,24,S_DIST_LEN, s_dist_02);
			len = MakeAlphaString(24,24,S_DIST_LEN, s_dist_03);
			len = MakeAlphaString(24,24,S_DIST_LEN, s_dist_04);
			len = MakeAlphaString(24,24,S_DIST_LEN, s_dist_05);
			len = MakeAlphaString(24,24,S_DIST_LEN, s_dist_06);
			len = MakeAlphaString(24,24,S_DIST_LEN, s_dist_07);
			len = MakeAlphaString(24,24,S_DIST_LEN, s_dist_08);
			len = MakeAlphaString(24,24,S_DIST_LEN, s_dist_09);
			len = MakeAlphaString(24,24,S_DIST_LEN, s_dist_10);

			len = MakeOriginalAlphaString(26,50, S_DATA_LEN,
s_data,10);

			rc = bcp_sendrow(w_hdbc1);
			if (rc != SUCCEED)
				HandleErrorDBC(w_hdbc1);

			stock_rows_loaded++;
			CheckForCommit(w_hdbc1, w_hstmt1, stock_rows_loaded,
"stock", &time_start);

		}
	}

	rcint = bcp_done(w_hdbc1);
	if (rcint < 0)
		HandleErrorDBC(w_hdbc1);

	printf("Finished loading stock table.\n");

	SQLFreeStmt(w_hstmt1, SQL_DROP);
	SQLDisconnect(w_hdbc1);
	SQLFreeConnect(w_hdbc1);

	// if build index after load...
	if ((aptr->build_index == 1) && (aptr->index_order == 0))
		BuildIndex("idxstkcl");

	return;
}

//=====================================================================
```

```
//
// Function   : LoadCustomer
//
//=====================================================================

void LoadCustomer()
{
	LOADER_TIME_STRUCT	customer_time_start;
	LOADER_TIME_STRUCT	history_time_start;
	short			w_id;
    short		d_id;
	DWORD			dwThreadID[MAX_CUSTOMER_THREADS];
	HANDLE			hThread[MAX_CUSTOMER_THREADS];
	char			name[20];
	RETCODE		rc;
	DBINT		rcint;
	char		bcphint[128];
	char		cmd[256];
	// SQLRETURN		rc_1;
	// SQLSMALLINT		recnum, MsgLen;
	// SQLCHAR		SqlState[6],
Msg[SQL_MAX_MESSAGE_LENGTH];
	// SQLINTEGER		NativeError;

	// Seed with unique number
	seed(5);

	printf("Loading customer and history tables...\n");

	// if build index before load...
	if ((aptr->build_index == 1) && (aptr->index_order == 1))
		BuildIndex("idxcuscl");

	// Initialize bulk copy
	sprintf(name, "%s..%s", aptr->database, "customer");

	rc = bcp_init(c_hdbc1, name, NULL, "logs\\customer.err", DB_IN);
	if (rc != SUCCEED)
		HandleErrorDBC(c_hdbc1);

	if ((aptr->build_index == 1) && (aptr->index_order == 1))
	{
		sprintf(bcphint, "tablock, order (c_w_id, c_d_id, c_id),
ROWS_PER_BATCH = %u", (aptr->num_warehouses * 30000));
		rc = bcp_control(c_hdbc1, BCPHINTS, (void*) bcphint);
		if (rc != SUCCEED)
			HandleErrorDBC(c_hdbc1);
	}

	sprintf(name, "%s..%s", aptr->database, "history");

	rc = bcp_init(c_hdbc2, name, NULL, "logs\\history.err", DB_IN);
	if (rc != SUCCEED)
		HandleErrorDBC(c_hdbc2);

	sprintf(bcphint, "tablock");
	rc = bcp_control(c_hdbc2, BCPHINTS, (void*) bcphint);
	if (rc != SUCCEED)
		HandleErrorDBC(c_hdbc2);

	customer_rows_loaded	= 0;
	history_rows_loaded	= 0;
```


Copyright Dell

```
        CustomerBufInit();

        customer_time_start.time_start = (TimeNow() / MILLI);
        history_time_start.time_start = (TimeNow() / MILLI);

        for (w_id = (short)aptr->starting_warehouse; w_id <= aptr->num_warehouses;
w_id++)
        {
                for (d_id = 1; d_id <= DISTRICT_PER_WAREHOUSE; d_id++)
                {

                        CustomerBufLoad(d_id, w_id);

                        // Start parallel loading threads here...

                        // Start customer table thread

                        printf("...Loading customer table for: d_id = %d, w_id =
%d\n", d_id, w_id);

                        hThread[0] = CreateThread(NULL,

0,

(LPTHREAD_START_ROUTINE) LoadCustomerTable,

&customer_time_start,

0,

&dwThreadID[0]);

                        if (hThread[0] == NULL)
                        {
                                printf("Error, failed in creating creating thread
= 0.\n");
                                exit(-1);
                        }

                        // Start History table thread

                        printf("...Loading history table for: d_id = %d, w_id =
%d\n", d_id, w_id);

                        hThread[1] = CreateThread(NULL,

0,

(LPTHREAD_START_ROUTINE) LoadHistoryTable,

&history_time_start,

0,

&dwThreadID[1]);

                        if (hThread[1] == NULL)
                        {
                                printf("Error, failed in creating creating thread
= 1.\n");
                                exit(-1);
                        }

                        WaitForSingleObject( hThread[0], INFINITE );
                        WaitForSingleObject( hThread[1], INFINITE );

                        if (CloseHandle(hThread[0]) == FALSE)
                        {
                                printf("Error, failed in closing customer thread
handle with errno: %d\n", GetLastError());
                        }

                        if (CloseHandle(hThread[1]) == FALSE)
                        {
                                printf("Error, failed in closing history thread
handle with errno: %d\n", GetLastError());
                        }


                }
        }

        // flush the bulk connection
        rcint = bcp_done(c_hdbc1);
        if (rcint < 0)
                HandleErrorDBC(c_hdbc1);

        rcint = bcp_done(c_hdbc2);
        if (rcint < 0)
                HandleErrorDBC(c_hdbc2);

        printf("Finished loading customer table.\n");

        // if build index after load...
        if ((aptr->build_index == 1) && (aptr->index_order == 0))
                BuildIndex("idxcuscl");

        // build non-clustered index
        if (aptr->build_index == 1)
                BuildIndex("idxcusnc");

        // Output the NURAND used for the loader into C_FIRST for C_ID = 1,
        // C_W_ID = 1, and C_D_ID = 1
        sprintf(cmd, "isql -S%s -U%s -P%s -d%s -e -Q\"update customer set c_first =
'C_LOAD = %d' where c_id = 1 and c_w_id = 1 and c_d_id = 1\" > logs\\nurand_load.log",
                                        aptr->server,
                                        aptr->user,
                                        aptr->password,
                                        aptr->database,
                                        LOADER_NURAND_C);

        system(cmd);

        SQLFreeStmt(c_hstmt1, SQL_DROP);
        SQLDisconnect(c_hdbc1);
        SQLFreeConnect(c_hdbc1);

        SQLFreeStmt(c_hstmt2, SQL_DROP);
        SQLDisconnect(c_hdbc2);
        SQLFreeConnect(c_hdbc2);


    return;

}
```

```
//=====================================================================
//
// Function   : CustomerBufInit
//
//=====================================================================

void CustomerBufInit()
{
          int     i;

          for (i=0;i<customers_per_district;i++)
          {
                    customer_buf[i].c_id = 0;
                    customer_buf[i].c_d_id = 0;
                    customer_buf[i].c_w_id = 0;

                    strcpy(customer_buf[i].c_first,"");
                    strcpy(customer_buf[i].c_middle,"");
                    strcpy(customer_buf[i].c_last,"");
                    strcpy(customer_buf[i].c_street_1,"");
                    strcpy(customer_buf[i].c_street_2,"");
                    strcpy(customer_buf[i].c_city,"");
                    strcpy(customer_buf[i].c_state,"");
                    strcpy(customer_buf[i].c_zip,"");
                    strcpy(customer_buf[i].c_phone,"");
                    strcpy(customer_buf[i].c_credit,"");

                    customer_buf[i].c_credit_lim = 0;
                    customer_buf[i].c_discount = (float) 0;

                    //  fix to avoid ODBC float to numeric conversion problem.
                    //        customer_buf[i].c_balance = 0;
                    strcpy(customer_buf[i].c_balance,"");

                    customer_buf[i].c_ytd_payment = 0;
                    customer_buf[i].c_payment_cnt = 0;
                    customer_buf[i].c_delivery_cnt = 0;

                    strcpy(customer_buf[i].c_data,"");

                    customer_buf[i].h_amount = 0;

                    strcpy(customer_buf[i].h_data,"");

          }


}


//=====================================================================
//
// Function   : CustomerBufLoad
//
// Fills shared buffer for HISTORY and CUSTOMER
//=====================================================================

void CustomerBufLoad(int d_id, int w_id)
{
          long                                    i;
    CUSTOMER_SORT_STRUCT    c[CUSTOMERS_PER_DISTRICT];

          for (i=0;i<customers_per_district;i++)
          {
                    if (i < 1000)
                              LastName(i, c[i].c_last);
                    else
                              LastName(NURand(255,0,999,LOADER_NURAND_C), c[i].c_last);

                    MakeAlphaString(8,16,FIRST_NAME_LEN, c[i].c_first);

                    c[i].c_id = i+1;

          }

          printf("...Loading customer buffer for: d_id = %d, w_id = %d\n",
                              d_id, w_id);

          for (i=0;i<customers_per_district;i++)
          {

                    customer_buf[i].c_d_id = d_id;
                    customer_buf[i].c_w_id = w_id;
                    customer_buf[i].h_amount = 10.0;

                    customer_buf[i].c_ytd_payment  = 10.0;

                    customer_buf[i].c_payment_cnt  = 1;
                    customer_buf[i].c_delivery_cnt = 0;

                    // Generate CUSTOMER and HISTORY data

                    customer_buf[i].c_id = c[i].c_id;

                    strcpy(customer_buf[i].c_first, c[i].c_first);
                    strcpy(customer_buf[i].c_last, c[i].c_last);

                    customer_buf[i].c_middle[0] = 'O';
                    customer_buf[i].c_middle[1] = 'E';

                    MakeAddress(customer_buf[i].c_street_1,
                                        customer_buf[i].c_street_2,
                                        customer_buf[i].c_city,
                                        customer_buf[i].c_state,
                                        customer_buf[i].c_zip);

                    MakeNumberString(16, 16, PHONE_LEN, customer_buf[i].c_phone);

                    if (RandomNumber(1L, 100L) > 10)
                              customer_buf[i].c_credit[0] = 'G';
                    else
                              customer_buf[i].c_credit[0] = 'B';
                    customer_buf[i].c_credit[1] = 'C';

                    customer_buf[i].c_credit_lim = 50000.0;
                    customer_buf[i].c_discount = ((float) RandomNumber(0L, 5000L)) /
10000.0;

                    //  fix to avoid ODBC float to numeric conversion problem.
                    //  customer_buf[i].c_balance = -10.0;
                    strcpy(customer_buf[i].c_balance,"-10.0");
```

```
                    MakeAlphaString(500, 500, C_DATA_LEN, customer_buf[i].c_data);


                    // Generate HISTORY data
                    MakeAlphaString(12, 24, H_DATA_LEN, customer_buf[i].h_data);

          }
}

//=====================================================================
//
// Function   : LoadCustomerTable
//
//=====================================================================

void LoadCustomerTable(LOADER_TIME_STRUCT *customer_time_start)
{
          int         i;
    long        c_id;
    short       c_d_id;
    short       c_w_id;
    char        c_first[FIRST_NAME_LEN+1];
    char        c_middle[MIDDLE_NAME_LEN+1];
    char        c_last[LAST_NAME_LEN+1];
    char        c_street_1[ADDRESS_LEN+1];
    char        c_street_2[ADDRESS_LEN+1];
    char        c_city[ADDRESS_LEN+1];
    char        c_state[STATE_LEN+1];
    char        c_zip[ZIP_LEN+1];
    char        c_phone[PHONE_LEN+1];
    char        c_credit[CREDIT_LEN+1];
    double      c_credit_lim;
    double      c_discount;

          //  fix to avoid ODBC float to numeric conversion problem.
          //  double                    c_balance;
          char                c_balance[6];

    double      c_ytd_payment;
    short       c_payment_cnt;
    short       c_delivery_cnt;
    char        c_data[C_DATA_LEN+1];
          char                c_since[C_SINCE_LEN+1];
          RETCODE             rc;

    rc = bcp_bind(c_hdbc1, (BYTE *) &c_id, 0, SQL_VARLEN_DATA, NULL, 0, SQLINT4, 1);
          if (rc != SUCCEED)
                    HandleErrorDBC(c_hdbc1);

    rc = bcp_bind(c_hdbc1, (BYTE *) &c_d_id, 0, SQL_VARLEN_DATA, NULL, 0, SQLINT2, 2);
          if (rc != SUCCEED)
                    HandleErrorDBC(c_hdbc1);

          rc = bcp_bind(c_hdbc1, (BYTE *) &c_w_id, 0, SQL_VARLEN_DATA, NULL, 0, SQLINT2,
3);
          if (rc != SUCCEED)
                    HandleErrorDBC(c_hdbc1);

    rc = bcp_bind(c_hdbc1, (BYTE *) c_first, 0, FIRST_NAME_LEN, NULL, 0, 0, 4);
          if (rc != SUCCEED)
                    HandleErrorDBC(c_hdbc1);

    rc = bcp_bind(c_hdbc1, (BYTE *) c_middle, 0, MIDDLE_NAME_LEN,NULL, 0, 0, 5);
          if (rc != SUCCEED)
                    HandleErrorDBC(c_hdbc1);

    rc = bcp_bind(c_hdbc1, (BYTE *) c_last, 0, LAST_NAME_LEN, NULL, 0, 0, 6);
          if (rc != SUCCEED)
                    HandleErrorDBC(c_hdbc1);

    rc = bcp_bind(c_hdbc1, (BYTE *) c_street_1, 0, ADDRESS_LEN, NULL, 0, 0, 7);
          if (rc != SUCCEED)
                    HandleErrorDBC(c_hdbc1);

    rc = bcp_bind(c_hdbc1, (BYTE *) c_street_2, 0, ADDRESS_LEN, NULL,0,0, 8);
          if (rc != SUCCEED)
                    HandleErrorDBC(c_hdbc1);

    rc = bcp_bind(c_hdbc1, (BYTE *) c_city, 0, ADDRESS_LEN, NULL, 0, 0, 9);
          if (rc != SUCCEED)
                    HandleErrorDBC(c_hdbc1);

    rc = bcp_bind(c_hdbc1, (BYTE *) c_state, 0, STATE_LEN, NULL, 0, 0, 10);
          if (rc != SUCCEED)
                    HandleErrorDBC(c_hdbc1);

    rc = bcp_bind(c_hdbc1, (BYTE *) c_zip, 0, ZIP_LEN, NULL, 0, 0, 11);
          if (rc != SUCCEED)
                    HandleErrorDBC(c_hdbc1);

    rc = bcp_bind(c_hdbc1, (BYTE *) c_phone, 0, PHONE_LEN, NULL, 0, 0, 12);
          if (rc != SUCCEED)
                    HandleErrorDBC(c_hdbc1);

          rc = bcp_bind(c_hdbc1, (BYTE *) &c_since, 0, C_SINCE_LEN, NULL, 0,
SQLCHARACTER, 13);
          if (rc != SUCCEED)
                    HandleErrorDBC(c_hdbc1);

    rc = bcp_bind(c_hdbc1, (BYTE *) c_credit, 0, CREDIT_LEN, NULL, 0, 0, 14);
          if (rc != SUCCEED)
                    HandleErrorDBC(c_hdbc1);

    rc = bcp_bind(c_hdbc1, (BYTE *) &c_credit_lim, 0, SQL_VARLEN_DATA, NULL, 0, SQLFLT8,
15);
          if (rc != SUCCEED)
                    HandleErrorDBC(c_hdbc1);

    rc = bcp_bind(c_hdbc1, (BYTE *) &c_discount, 0, SQL_VARLEN_DATA, NULL, 0, SQLFLT8,
16);
          if (rc != SUCCEED)
                    HandleErrorDBC(c_hdbc1);


          //  fix to avoid ODBC float to numeric conversion problem.
    //  rc = bcp_bind(c_hdbc1, (BYTE *) &c_balance, 0, SQL_VARLEN_DATA, NULL, 0, SQLFLT8,
17);
          //  if (rc != SUCCEED)
          //        HandleErrorDBC(c_hdbc1);
    rc = bcp_bind(c_hdbc1, (BYTE *) c_balance, 0, 5, NULL, 0, SQLCHARACTER, 17);
          if (rc != SUCCEED)
                    HandleErrorDBC(c_hdbc1);


    rc = bcp_bind(c_hdbc1, (BYTE *) &c_ytd_payment, 0, SQL_VARLEN_DATA, NULL, 0, SQLFLT8,
18);
```


Copyright Dell

```
          if (rc != SUCCEED)
                    HandleErrorDBC(c_hdbc1);

    rc = bcp_bind(c_hdbc1, (BYTE *) &c_payment_cnt, 0, SQL_VARLEN_DATA, NULL, 0, SQLINT2,
19);
          if (rc != SUCCEED)
                    HandleErrorDBC(c_hdbc1);

    rc = bcp_bind(c_hdbc1, (BYTE *) &c_delivery_cnt,0, SQL_VARLEN_DATA, NULL, 0, SQLINT2,
20);
          if (rc != SUCCEED)
                    HandleErrorDBC(c_hdbc1);

    rc = bcp_bind(c_hdbc1, (BYTE *) c_data, 0, 500, NULL, 0, 0, 21);
          if (rc != SUCCEED)
                    HandleErrorDBC(c_hdbc1);

    for (i = 0; i < customers_per_district; i++)
    {
                    c_id = customer_buf[i].c_id;
                    c_d_id = customer_buf[i].c_d_id;
                    c_w_id = customer_buf[i].c_w_id;

                    strcpy(c_first, customer_buf[i].c_first);
                    strcpy(c_middle, customer_buf[i].c_middle);
                    strcpy(c_last, customer_buf[i].c_last);
                    strcpy(c_street_1, customer_buf[i].c_street_1);
                    strcpy(c_street_2, customer_buf[i].c_street_2);
                    strcpy(c_city, customer_buf[i].c_city);
                    strcpy(c_state, customer_buf[i].c_state);
                    strcpy(c_zip, customer_buf[i].c_zip);
                    strcpy(c_phone, customer_buf[i].c_phone);
                    strcpy(c_credit, customer_buf[i].c_credit);

                    FormatDate(&c_since);

                    c_credit_lim = customer_buf[i].c_credit_lim;
                    c_discount = customer_buf[i].c_discount;

                    //  fix to avoid ODBC float to numeric conversion problem.

                    //  c_balance = customer_buf[i].c_balance;
                    strcpy(c_balance, customer_buf[i].c_balance);

                    c_ytd_payment = customer_buf[i].c_ytd_payment;
                    c_payment_cnt = customer_buf[i].c_payment_cnt;
                    c_delivery_cnt = customer_buf[i].c_delivery_cnt;

                    strcpy(c_data, customer_buf[i].c_data);

                    // Send data to server
                    rc = bcp_sendrow(c_hdbc1);
                    if (rc != SUCCEED)
                              HandleErrorDBC(c_hdbc1);

                    customer_rows_loaded++;
                    CheckForCommit(c_hdbc1, c_hstmt1, customer_rows_loaded, "customer",
&customer_time_start->time_start);
    }

}
```

```
//=====================================================================
//
// Function   : LoadHistoryTable
//
//=====================================================================

void LoadHistoryTable(LOADER_TIME_STRUCT *history_time_start)
{
          int         i;
    long        c_id;
    short       c_d_id;
    short       c_w_id;
          double    h_amount;
    char        h_data[H_DATA_LEN+1];
          char                h_date[H_DATE_LEN+1];
          RETCODE             rc;

    rc = bcp_bind(c_hdbc2, (BYTE *) &c_id, 0, SQL_VARLEN_DATA, NULL, 0, SQLINT4, 1);
          if (rc != SUCCEED)
                    HandleErrorDBC(c_hdbc2);

    rc = bcp_bind(c_hdbc2, (BYTE *) &c_d_id, 0, SQL_VARLEN_DATA, NULL, 0, SQLINT2, 2);
          if (rc != SUCCEED)
                    HandleErrorDBC(c_hdbc2);

    rc = bcp_bind(c_hdbc2, (BYTE *) &c_w_id, 0, SQL_VARLEN_DATA, NULL, 0, SQLINT2, 3);
          if (rc != SUCCEED)
                    HandleErrorDBC(c_hdbc2);

    rc = bcp_bind(c_hdbc2, (BYTE *) &c_d_id, 0, SQL_VARLEN_DATA, NULL, 0, SQLINT2, 4);
          if (rc != SUCCEED)
                    HandleErrorDBC(c_hdbc2);

    rc = bcp_bind(c_hdbc2, (BYTE *) &c_w_id, 0, SQL_VARLEN_DATA, NULL, 0, SQLINT2, 5);
          if (rc != SUCCEED)
                    HandleErrorDBC(c_hdbc2);

          rc = bcp_bind(c_hdbc2, (BYTE *) &h_date, 0, H_DATE_LEN, NULL, 0, SQLCHARACTER,
6);
          if (rc != SUCCEED)
                    HandleErrorDBC(c_hdbc2);

    rc = bcp_bind(c_hdbc2, (BYTE *) &h_amount, 0, SQL_VARLEN_DATA, NULL, 0, SQLFLT8, 7);
          if (rc != SUCCEED)
                    HandleErrorDBC(c_hdbc2);

    rc = bcp_bind(c_hdbc2, (BYTE *) h_data, 0, H_DATA_LEN, NULL, 0, 0, 8);
          if (rc != SUCCEED)
                    HandleErrorDBC(c_hdbc2);

    for (i = 0; i < customers_per_district; i++)
    {
                    c_id = customer_buf[i].c_id;
                    c_d_id = customer_buf[i].c_d_id;
                    c_w_id = customer_buf[i].c_w_id;
                    h_amount = customer_buf[i].h_amount;
                    strcpy(h_data, customer_buf[i].h_data);

                    FormatDate(&h_date);

                    // send to server
                    rc = bcp_sendrow(c_hdbc2);
                    if (rc != SUCCEED)
```

```
                                HandleErrorDBC(c_hdbc2);

                        history_rows_loaded++;
                        CheckForCommit(c_hdbc2, c_hstmt2, history_rows_loaded, "history",
&history_time_start->time_start);
    }

}


//==========================================================-===============
//
// Function   : LoadOrders
//
//=========================================================================

void LoadOrders()
{
          LOADER_TIME_STRUCT      orders_time_start;
          LOADER_TIME_STRUCT      new_order_time_start;
          LOADER_TIME_STRUCT      order_line_time_start;
          short                        w_id;
    short                         d_id;
          DWORD                        dwThreadID[MAX_ORDER_THREADS];
          HANDLE                       hThread[MAX_ORDER_THREADS];
          char                         name[20];
          RETCODE                                     rc;
          char                                        bcphint[128];

          // seed with unique number
          seed(6);

          printf("Loading orders...\n");

          // if build index before load...
          if ((aptr->build_index == 1) && (aptr->index_order == 1))
          {
                                BuildIndex("idxordcl");
                                BuildIndex("idxnodcl");
                                BuildIndex("idxodlcl");
          }

          // initialize bulk copy
          sprintf(name, "%s..%s", aptr->database, "orders");

          rc = bcp_init(o_hdbc1, name, NULL, "logs\\orders.err", DB_IN);
          if (rc != SUCCEED)
                    HandleErrorDBC(o_hdbc1);

          if ((aptr->build_index == 1) && (aptr->index_order == 1))
          {
                    sprintf(bcphint, "tablock, order (o_w_id, o_d_id, o_id),
ROWS_PER_BATCH = %u", (aptr->num_warehouses * 30000));
                    rc = bcp_control(o_hdbc1, BCPHINTS, (void*) bcphint);
                    if (rc != SUCCEED)
                              HandleErrorDBC(o_hdbc1);
          }

          sprintf(name, "%s..%s", aptr->database, "new_order");

          rc = bcp_init(o_hdbc2, name, NULL, "logs\\neword.err", DB_IN);
          if (rc != SUCCEED)
                    HandleErrorDBC(o_hdbc2);

          if ((aptr->build_index == 1) && (aptr->index_order == 1))
          {
                    sprintf(bcphint, "tablock, order (no_w_id, no_d_id, no_o_id),
ROWS_PER_BATCH = %u", (aptr->num_warehouses * 9000));
                    rc = bcp_control(o_hdbc2, BCPHINTS, (void*) bcphint);
                    if (rc != SUCCEED)
                              HandleErrorDBC(o_hdbc2);
          }

          sprintf(name, "%s..%s", aptr->database, "order_line");

          rc = bcp_init(o_hdbc3, name, NULL, "logs\\ordline.err", DB_IN);
          if (rc != SUCCEED)
                    HandleErrorDBC(o_hdbc3);

    if ((aptr->build_index == 1) && (aptr->index_order == 1))
          {
                    sprintf(bcphint, "tablock, order (ol_w_id, ol_d_id, ol_o_id,
ol_number), ROWS_PER_BATCH = %u", (aptr->num_warehouses * 300000));
                    rc = bcp_control(o_hdbc3, BCPHINTS, (void*) bcphint);
                    if (rc != SUCCEED)
                              HandleErrorDBC(o_hdbc3);
          }

          orders_rows_loaded      = 0;
          new_order_rows_loaded   = 0;
          order_line_rows_loaded  = 0;

          OrdersBufInit();

          orders_time_start.time_start = (TimeNow() / MILLI);
          new_order_time_start.time_start = (TimeNow() / MILLI);
          order_line_time_start.time_start = (TimeNow() / MILLI);

          for (w_id = (short)aptr->starting_warehouse; w_id <= aptr->num_warehouses;
w_id++)
          {
                    for (d_id = 1; d_id <= DISTRICT_PER_WAREHOUSE; d_id++)
                    {

                              OrdersBufLoad(d_id, w_id);

                              // start parallel loading threads here...

                              // start Orders table thread

                              printf("...Loading Order Table for: d_id = %d, w_id =
%d\n", d_id, w_id);

                              hThread[0] = CreateThread(NULL,

0,

(LPTHREAD_START_ROUTINE) LoadOrdersTable,

&orders_time_start,

0,

&dwThreadID[0]);

                              if (hThread[0] == NULL)
```

```
                                {
                                          printf("Error, failed in creating creating thread
= 0.\n");
                                          exit(-1);
                                }

                                // start NewOrder table thread

                                printf("...Loading New-Order Table for: d_id = %d, w_id =
%d\n", d_id, w_id);

                                hThread[1] = CreateThread(NULL,

0,

(LPTHREAD_START_ROUTINE) LoadNewOrderTable,

&new_order_time_start,

0,

&dwThreadID[1]);

                                if (hThread[1] == NULL)
                                {
                                          printf("Error, failed in creating creating thread
= 1.\n");
                                          exit(-1);
                                }

                                // start Order-Line table thread

                                printf("...Loading Order-Line Table for: d_id = %d, w_id =
%d\n", d_id, w_id);

                                hThread[2] = CreateThread(NULL,

0,

(LPTHREAD_START_ROUTINE) LoadOrderLineTable,

&order_line_time_start,

0,

&dwThreadID[2]);

                                if (hThread[2] == NULL)
                                {
                                          printf("Error, failed in creating creating thread
= 2.\n");
                                          exit(-1);
                                }

                                WaitForSingleObject( hThread[0], INFINITE );
                                WaitForSingleObject( hThread[1], INFINITE );
                                WaitForSingleObject( hThread[2], INFINITE );

                                if (CloseHandle(hThread[0]) == FALSE)
                                {
                                          printf("Error, failed in closing Orders thread
handle with errno: %d\n", GetLastError());
                                }

                                if (CloseHandle(hThread[1]) == FALSE)
                                {
                                          printf("Error, failed in closing NewOrder thread
handle with errno: %d\n", GetLastError());
                                }

                                if (CloseHandle(hThread[2]) == FALSE)
                                {
                                          printf("Error, failed in closing OrderLine thread
handle with errno: %d\n", GetLastError());
                                }

                          }
                }

                printf("Finished loading orders.\n");


        return;
}


//=====================================================================
//
// Function   : OrdersBufInit
//
// Clears shared buffer for ORDERS, NEWORDER, and ORDERLINE
//
//=====================================================================

void OrdersBufInit()
{
                int     i;
                int                 j;

                for (i=0;i<orders_per_district;i++)
                {
                          orders_buf[i].o_id = 0;
                          orders_buf[i].o_d_id = 0;
                          orders_buf[i].o_w_id = 0;
                          orders_buf[i].o_c_id = 0;
                          orders_buf[i].o_carrier_id = 0;
                          orders_buf[i].o_ol_cnt = 0;
                          orders_buf[i].o_all_local = 0;

                          for (j=0;j<=14;j++)
                          {
                                    orders_buf[i].o_ol[j].ol = 0;
                                    orders_buf[i].o_ol[j].ol_i_id = 0;
                                    orders_buf[i].o_ol[j].ol_supply_w_id = 0;
                                    orders_buf[i].o_ol[j].ol_quantity = 0;
                                    orders_buf[i].o_ol[j].ol_amount = 0;
                                    strcpy(orders_buf[i].o_ol[j].ol_dist_info,"");
                          }
                }


}


//=====================================================================
//
```

```
// Function   : OrdersBufLoad
//
// Fills shared buffer for ORDERS, NEWORDER, and ORDERLINE
//
//=====================================================================

void OrdersBufLoad(int d_id, int w_id)
{

          int     cust[ORDERS_PER_DIST+1];
          long    o_id;
          short   ol;

          printf("...Loading Order Buffer for: d_id = %d, w_id = %d\n",
                              d_id, w_id);

          GetPermutation(cust, ORDERS_PER_DIST);

          for (o_id=0;o_id<orders_per_district;o_id++)
          {

                    // Generate ORDER and NEW-ORDER data

                    orders_buf[o_id].o_d_id = d_id;
                    orders_buf[o_id].o_w_id = w_id;
                    orders_buf[o_id].o_id = o_id+1;
                    orders_buf[o_id].o_c_id = cust[o_id+1];
                    orders_buf[o_id].o_ol_cnt = (short)RandomNumber(5L, 15L);

                    if (o_id < first_new_order)
                    {
                              orders_buf[o_id].o_carrier_id = (short)RandomNumber(1L,
10L);
                              orders_buf[o_id].o_all_local  = 1;
                    }
                    else
                    {
                              orders_buf[o_id].o_carrier_id = 0;
                              orders_buf[o_id].o_all_local  = 1;
                    }

                    for (ol=0; ol<orders_buf[o_id].o_ol_cnt; ol++)
                    {

                              orders_buf[o_id].o_ol[ol].ol = ol+1;
                              orders_buf[o_id].o_ol[ol].ol_i_id = RandomNumber(1L,
max_items);
                              orders_buf[o_id].o_ol[ol].ol_supply_w_id = w_id;
                              orders_buf[o_id].o_ol[ol].ol_quantity = 5;
                              MakeAlphaString(24, 24, OL_DIST_INFO_LEN,
&orders_buf[o_id].o_ol[ol].ol_dist_info);

                              // Generate ORDER-LINE data
                              if (o_id < first_new_order)
                              {
                                        orders_buf[o_id].o_ol[ol].ol_amount = 0;
                                        // Added to insure ol_delivery_d set properly
during load


          FormatDate(&orders_buf[o_id].o_ol[ol].ol_delivery_d);

                              }
                              else
                              {
                                        orders_buf[o_id].o_ol[ol].ol_amount =
RandomNumber(1,999999)/100.0;
                                        // Added to insure ol_delivery_d set properly
during load

                                        // odbc datetime format

          strcpy(orders_buf[o_id].o_ol[ol].ol_delivery_d,"1899-12-31 12:00:00.000");

                              }
                    }
          }
}


//=====================================================================
//
// Function   : LoadOrdersTable
//
//=====================================================================

void LoadOrdersTable(LOADER_TIME_STRUCT *orders_time_start)
{
          int         i;
    long        o_id;
          short     o_d_id;
          short     o_w_id;
    long        o_c_id;
    short       o_carrier_id;
    short       o_ol_cnt;
    short       o_all_local;
          char                o_entry_d[O_ENTRY_D_LEN+1];
          RETCODE             rc;
          DBINT               rcint;

          // bind ORDER data
    rc = bcp_bind(o_hdbc1, (BYTE *) &o_id, 0, SQL_VARLEN_DATA, NULL, 0, SQLINT4, 1);
          if (rc != SUCCEED)
                    HandleErrorDBC(o_hdbc1);

    rc = bcp_bind(o_hdbc1, (BYTE *) &o_d_id, 0, SQL_VARLEN_DATA, NULL, 0, SQLINT2, 2);
          if (rc != SUCCEED)
                    HandleErrorDBC(o_hdbc1);

    rc = bcp_bind(o_hdbc1, (BYTE *) &o_w_id, 0, SQL_VARLEN_DATA, NULL, 0, SQLINT2, 3);
          if (rc != SUCCEED)
                    HandleErrorDBC(o_hdbc1);

    rc = bcp_bind(o_hdbc1, (BYTE *) &o_c_id, 0, SQL_VARLEN_DATA, NULL, 0, SQLINT4, 4);
          if (rc != SUCCEED)
                    HandleErrorDBC(o_hdbc1);

          rc = bcp_bind(o_hdbc1, (BYTE *) &o_entry_d, 0, O_ENTRY_D_LEN, NULL, 0,
SQLCHARACTER, 5);
          if (rc != SUCCEED)
                    HandleErrorDBC(o_hdbc1);

    rc = bcp_bind(o_hdbc1, (BYTE *) &o_carrier_id, 0, SQL_VARLEN_DATA, NULL, 0, SQLINT2,
6);
          if (rc != SUCCEED)
                    HandleErrorDBC(o_hdbc1);
```

```
    rc = bcp_bind(o_hdbc1, (BYTE *) &o_ol_cnt, 0, SQL_VARLEN_DATA, NULL, 0, SQLINT2, 7);
          if (rc != SUCCEED)
                    HandleErrorDBC(o_hdbc1);

    rc = bcp_bind(o_hdbc1, (BYTE *) &o_all_local, 0, SQL_VARLEN_DATA, NULL, 0, SQLINT2,
8);
          if (rc != SUCCEED)
                    HandleErrorDBC(o_hdbc1);

    for (i = 0; i < orders_per_district; i++)
    {
                    o_id         = orders_buf[i].o_id;
                    o_d_id       = orders_buf[i].o_d_id;
                    o_w_id       = orders_buf[i].o_w_id;
                    o_c_id       = orders_buf[i].o_c_id;
                    o_carrier_id = orders_buf[i].o_carrier_id;
                    o_ol_cnt     = orders_buf[i].o_ol_cnt;
                    o_all_local  = orders_buf[i].o_all_local;

                    FormatDate(&o_entry_d);

                    // send data to server
                    rc = bcp_sendrow(o_hdbc1);
                    if (rc != SUCCEED)
                              HandleErrorDBC(o_hdbc1);

                    orders_rows_loaded++;
                    CheckForCommit(o_hdbc1, o_hstmt1, orders_rows_loaded, "orders",
&orders_time_start->time_start);
    }

          // rcint = bcp_batch(o_hdbc1);
          // if (rcint < 0)
          //        HandleErrorDBC(o_hdbc1);

          if ((o_w_id == aptr->num_warehouses) && (o_d_id == 10))
          {
                    rcint = bcp_done(o_hdbc1);
                    if (rcint < 0)
                              HandleErrorDBC(o_hdbc1);

                    SQLFreeStmt(o_hstmt1, SQL_DROP);
                    SQLDisconnect(o_hdbc1);
                    SQLFreeConnect(o_hdbc1);

                    // if build index after load...
                    if ((aptr->build_index == 1) && (aptr->index_order == 0))
                              BuildIndex("idxordcl");

                    // build non-clustered index
                    if (aptr->build_index == 1)
                              BuildIndex("idxordnc");
          }

}


//=====================================================================
//
// Function   : LoadNewOrderTable
//
//=====================================================================
```

```
void LoadNewOrderTable(LOADER_TIME_STRUCT *new_order_time_start)
{
    int         i;
    long        o_id;
    short       o_d_id;
    short       o_w_id;
          RETCODE             rc;
          DBINT               rcint;

          // Bind NEW-ORDER data

    rc = bcp_bind(o_hdbc2, (BYTE *) &o_id, 0, SQL_VARLEN_DATA, NULL, 0, SQLINT4, 1);
          if (rc != SUCCEED)
                    HandleErrorDBC(o_hdbc2);

    rc = bcp_bind(o_hdbc2, (BYTE *) &o_d_id, 0, SQL_VARLEN_DATA, NULL, 0, SQLINT2, 2);
          if (rc != SUCCEED)
                    HandleErrorDBC(o_hdbc2);

    rc = bcp_bind(o_hdbc2, (BYTE *) &o_w_id, 0, SQL_VARLEN_DATA, NULL, 0, SQLINT2, 3);
          if (rc != SUCCEED)
                    HandleErrorDBC(o_hdbc2);

          for (i = first_new_order; i < last_new_order; i++)
          {
                    o_id    = orders_buf[i].o_id;
                    o_d_id  = orders_buf[i].o_d_id;
                    o_w_id  = orders_buf[i].o_w_id;

                    rc = bcp_sendrow(o_hdbc2);
                    if (rc != SUCCEED)
                              HandleErrorDBC(o_hdbc2);

                    new_order_rows_loaded++;
                    CheckForCommit(o_hdbc2, o_hstmt2, new_order_rows_loaded, "new_order",
&new_order_time_start->time_start);
          }

          // rcint = bcp_batch(o_hdbc2);
          // if (rcint < 0)
          //        HandleErrorDBC(o_hdbc2);

          if ((o_w_id == aptr->num_warehouses) && (o_d_id == 10))
          {
                    rcint = bcp_done(o_hdbc2);
                    if (rcint < 0)
                              HandleErrorDBC(o_hdbc2);

                    SQLFreeStmt(o_hstmt2, SQL_DROP);
                    SQLDisconnect(o_hdbc2);
                    SQLFreeConnect(o_hdbc2);

                    // if build index after load...
                    if ((aptr->build_index == 1) && (aptr->index_order == 0))
                              BuildIndex("idxnodcl");

          }

}


//=====================================================================
```

```
//
// Function   : LoadOrderLineTable
//
//=====================================================================

void LoadOrderLineTable(LOADER_TIME_STRUCT *order_line_time_start)
{
          int         i,j;
    long        o_id;
          short     o_d_id;
          short     o_w_id;
    long        ol;
          long      ol_i_id;
    short       ol_supply_w_id;
    short       ol_quantity;
    double      ol_amount;
    char        ol_dist_info[DIST_INFO_LEN+1];
          char                ol_delivery_d[OL_DELIVERY_D_LEN+1];
          RETCODE             rc;
          DBINT               rcint;

          // bind ORDER-LINE data
    rc = bcp_bind(o_hdbc3, (BYTE *) &o_id, 0, SQL_VARLEN_DATA, NULL, 0, SQLINT4, 1);
          if (rc != SUCCEED)
                    HandleErrorDBC(o_hdbc3);

    rc = bcp_bind(o_hdbc3, (BYTE *) &o_d_id, 0, SQL_VARLEN_DATA, NULL, 0, SQLINT2, 2);
          if (rc != SUCCEED)
                    HandleErrorDBC(o_hdbc3);

    rc = bcp_bind(o_hdbc3, (BYTE *) &o_w_id, 0, SQL_VARLEN_DATA, NULL, 0, SQLINT2, 3);
          if (rc != SUCCEED)
                    HandleErrorDBC(o_hdbc3);

    rc = bcp_bind(o_hdbc3, (BYTE *) &ol, 0, SQL_VARLEN_DATA, NULL, 0, SQLINT4, 4);
          if (rc != SUCCEED)
                    HandleErrorDBC(o_hdbc3);

    rc = bcp_bind(o_hdbc3, (BYTE *) &ol_i_id, 0, SQL_VARLEN_DATA, NULL, 0, SQLINT4, 5);
          if (rc != SUCCEED)
                    HandleErrorDBC(o_hdbc3);

    rc = bcp_bind(o_hdbc3, (BYTE *) &ol_supply_w_id, 0, SQL_VARLEN_DATA, NULL, 0,
SQLINT2, 6);
          if (rc != SUCCEED)
                    HandleErrorDBC(o_hdbc3);

          rc = bcp_bind(o_hdbc3, (BYTE *) &ol_delivery_d, 0, OL_DELIVERY_D_LEN, NULL, 0,
SQLCHARACTER, 7);
          if (rc != SUCCEED)
                    HandleErrorDBC(o_hdbc3);

    rc = bcp_bind(o_hdbc3, (BYTE *) &ol_quantity, 0, SQL_VARLEN_DATA, NULL, 0, SQLINT2,
8);
          if (rc != SUCCEED)
                    HandleErrorDBC(o_hdbc3);

    rc = bcp_bind(o_hdbc3, (BYTE *) &ol_amount, 0, SQL_VARLEN_DATA, NULL, 0, SQLFLT8, 9);
          if (rc != SUCCEED)
                    HandleErrorDBC(o_hdbc3);

    rc = bcp_bind(o_hdbc3, (BYTE *) ol_dist_info, 0, DIST_INFO_LEN, NULL, 0, 0, 10);
          if (rc != SUCCEED)
                    HandleErrorDBC(o_hdbc3);

          for (i = 0; i < orders_per_district; i++)
    {
                    o_id    = orders_buf[i].o_id;
                    o_d_id  = orders_buf[i].o_d_id;
                    o_w_id  = orders_buf[i].o_w_id;

                    for (j=0; j < orders_buf[i].o_ol_cnt; j++)
                    {
                              ol             = orders_buf[i].o_ol[j].ol;
                              ol_i_id        = orders_buf[i].o_ol[j].ol_i_id;
                              ol_supply_w_id = orders_buf[i].o_ol[j].ol_supply_w_id;
                              ol_quantity    = orders_buf[i].o_ol[j].ol_quantity;
                              ol_amount      = orders_buf[i].o_ol[j].ol_amount;

                              strcpy(ol_delivery_d,orders_buf[i].o_ol[j].ol_delivery_d);

                              strcpy(ol_dist_info,orders_buf[i].o_ol[j].ol_dist_info);

                              rc = bcp_sendrow(o_hdbc3);
                              if (rc != SUCCEED)
                                        HandleErrorDBC(o_hdbc3);

                              order_line_rows_loaded++;
                              CheckForCommit(o_hdbc3, o_hstmt3, order_line_rows_loaded,
"order_line", &order_line_time_start->time_start);
                    }

          }

          // rcint = bcp_batch(o_hdbc3);
          // if (rcint < 0)
          //        HandleErrorDBC(o_hdbc3);

          if ((o_w_id == aptr->num_warehouses) && (o_d_id == 10))
          {
                    rcint = bcp_done(o_hdbc3);
                    if (rcint < 0)
                              HandleErrorDBC(o_hdbc3);

                    SQLFreeStmt(o_hstmt3, SQL_DROP);
                    SQLDisconnect(o_hdbc3);
                    SQLFreeConnect(o_hdbc3);

                    // if build index after load...
                    if ((aptr->build_index == 1) && (aptr->index_order == 0))
                              BuildIndex("idxodlcl");

          }

}


//=====================================================================
//
// Function   : GetPermutation
//
//=====================================================================

void GetPermutation(int perm[], int n)
{
          int i, r, t;
```

```
          for (i=1;i<=n;i++)
                    perm[i] = i;

          for (i=1;i<=n;i++)
          {
                    r = RandomNumber(i,n);
                    t = perm[i];
                    perm[i] = perm[r];
                    perm[r] = t;
          }

}


//=====================================================================
//
// Function   : CheckForCommit
//
//=====================================================================

void CheckForCommit(HDBC hdbc,
                                                  HSTMT hstmt,
                                        int rows_loaded,
                                                  char *table_name,
                                        long *time_start)
{

    long  time_end, time_diff;
          // DBINT  rcint;

    if ( !(rows_loaded % aptr->batch) )
    {

                    // rcint = bcp_batch(hdbc);
                    // if (rcint < 0)
                    //        HandleErrorDBC(hdbc);

                    time_end = (TimeNow() / MILLI);
                    time_diff = time_end - *time_start;

                    printf("-> Loaded %ld rows into %s in %ld sec - Total = %d (%.2f
rps)\n",
                              aptr->batch,
                              table_name,
                                        time_diff,
                              rows_loaded,
                                        (float) aptr->batch / (time_diff ? time_diff :
1L));

                    *time_start = time_end;
    }

    return;
}


//=====================================================================
//
// Function   : OpenConnections
//
//=====================================================================
```

```
void OpenConnections()
{

          RETCODE         rc;

          char                          szDriverString[300];
          char                          szDriverStringOut[1024];
          SQLSMALLINT                   cbDriverStringOut;


          SQLAllocHandle(SQL_HANDLE_ENV, SQL_NULL_HANDLE, &henv );

          SQLSetEnvAttr(henv, SQL_ATTR_ODBC_VERSION, (void*)SQL_OV_ODBC3, 0 );

          SQLAllocHandle(SQL_HANDLE_DBC, henv , &i_hdbc1);
          SQLAllocHandle(SQL_HANDLE_DBC, henv , &w_hdbc1);
          SQLAllocHandle(SQL_HANDLE_DBC, henv , &c_hdbc1);
          SQLAllocHandle(SQL_HANDLE_DBC, henv , &c_hdbc2);
          SQLAllocHandle(SQL_HANDLE_DBC, henv , &o_hdbc1);
          SQLAllocHandle(SQL_HANDLE_DBC, henv , &o_hdbc2);
          SQLAllocHandle(SQL_HANDLE_DBC, henv , &o_hdbc3);

          SQLSetConnectAttr(i_hdbc1, SQL_COPT_SS_BCP, (void *)SQL_BCP_ON, SQL_IS_INTEGER
);
          SQLSetConnectAttr(w_hdbc1, SQL_COPT_SS_BCP, (void *)SQL_BCP_ON, SQL_IS_INTEGER
);
          SQLSetConnectAttr(c_hdbc1, SQL_COPT_SS_BCP, (void *)SQL_BCP_ON, SQL_IS_INTEGER
);
          SQLSetConnectAttr(c_hdbc2, SQL_COPT_SS_BCP, (void *)SQL_BCP_ON, SQL_IS_INTEGER
);
          SQLSetConnectAttr(o_hdbc1, SQL_COPT_SS_BCP, (void *)SQL_BCP_ON, SQL_IS_INTEGER
);
          SQLSetConnectAttr(o_hdbc2, SQL_COPT_SS_BCP, (void *)SQL_BCP_ON, SQL_IS_INTEGER
);
          SQLSetConnectAttr(o_hdbc3, SQL_COPT_SS_BCP, (void *)SQL_BCP_ON, SQL_IS_INTEGER
);

          // Open connections to SQL Server

          // Connection 1

          sprintf( szDriverString , "DRIVER={SQL
Server};SERVER=%s;UID=%s;PWD=%s;DATABASE=%s" ,
                                                                  aptr->server,
                                                                  aptr->user,
                                                                  aptr->password,
                                                                  aptr->database );

          rc = SQLSetConnectOption (i_hdbc1, SQL_PACKET_SIZE, aptr->pack_size);
          if (rc != SUCCEED)
                    HandleErrorDBC(i_hdbc1);

          rc = SQLDriverConnect ( i_hdbc1,
                                                        NULL,
                                                              (SQLCHAR*)&szDriverString[0]
,
                                                              SQL_NTS,

          (SQLCHAR*)&szDriverStringOut[0],
                                                              sizeof(szDriverStringOut),
                                                              &cbDriverStringOut,
                                                              SQL_DRIVER_NOPROMPT );
          if (rc != SUCCEED)
```

```
                    HandleErrorDBC(i_hdbc1);

          // Connection 2

          sprintf( szDriverString , "DRIVER={SQL
Server};SERVER=%s;UID=%s;PWD=%s;DATABASE=%s" ,
                                                                  aptr->server,
                                                                  aptr->user,
                                                                  aptr->password,
                                                                  aptr->database );

          rc = SQLSetConnectOption (w_hdbc1, SQL_PACKET_SIZE, aptr->pack_size);
          if (rc != SUCCEED)
                    HandleErrorDBC(w_hdbc1);

          rc = SQLDriverConnect ( w_hdbc1,
                                                                          NULL,

          (SQLCHAR*)&szDriverString[0] ,
                                                                          SQL_NTS,

          (SQLCHAR*)&szDriverStringOut[0],

          sizeof(szDriverStringOut),
                                                                          &cbDriverStringOut,
                                                                          SQL_DRIVER_NOPROMPT
);
          if (rc != SUCCEED)
                    HandleErrorDBC(w_hdbc1);

          // Connection 3

          sprintf( szDriverString , "DRIVER={SQL
Server};SERVER=%s;UID=%s;PWD=%s;DATABASE=%s" ,
                                                                  aptr->server,
                                                                  aptr->user,
                                                                  aptr->password,
                                                                  aptr->database );

          rc = SQLSetConnectOption (c_hdbc1, SQL_PACKET_SIZE, aptr->pack_size);
          if (rc != SUCCEED)
                    HandleErrorDBC(c_hdbc1);

          rc = SQLDriverConnect ( c_hdbc1,
                                                                          NULL,

          (SQLCHAR*)&szDriverString[0] ,
                                                                          SQL_NTS,

          (SQLCHAR*)&szDriverStringOut[0],

          sizeof(szDriverStringOut),
                                                                          &cbDriverStringOut,
                                                                          SQL_DRIVER_NOPROMPT
);
          if (rc != SUCCEED)
                    HandleErrorDBC(c_hdbc1);

          // Connection 4

          sprintf( szDriverString , "DRIVER={SQL
Server};SERVER=%s;UID=%s;PWD=%s;DATABASE=%s" ,
                                                                  aptr->server,
                                                                  aptr->user,
                                                                  aptr->password,
                                                                  aptr->database );

          rc = SQLSetConnectOption (c_hdbc2, SQL_PACKET_SIZE, aptr->pack_size);
          if (rc != SUCCEED)
                    HandleErrorDBC(c_hdbc2);

          rc = SQLDriverConnect ( c_hdbc2,
                                                                          NULL,

          (SQLCHAR*)&szDriverString[0] ,
                                                                          SQL_NTS,

          (SQLCHAR*)&szDriverStringOut[0],

          sizeof(szDriverStringOut),
                                                                          &cbDriverStringOut,
                                                                          SQL_DRIVER_NOPROMPT
);
          if (rc != SUCCEED)
                    HandleErrorDBC(c_hdbc2);

          // Connection 5

          sprintf( szDriverString , "DRIVER={SQL
Server};SERVER=%s;UID=%s;PWD=%s;DATABASE=%s" ,
                                                                  aptr->server,
                                                                  aptr->user,
                                                                  aptr->password,
                                                                  aptr->database );

          rc = SQLSetConnectOption (o_hdbc1, SQL_PACKET_SIZE, aptr->pack_size);
          if (rc != SUCCEED)
                    HandleErrorDBC(o_hdbc1);

          rc = SQLDriverConnect ( o_hdbc1,
                                                                          NULL,

          (SQLCHAR*)&szDriverString[0] ,
                                                                          SQL_NTS,

          (SQLCHAR*)&szDriverStringOut[0],

          sizeof(szDriverStringOut),
                                                                          &cbDriverStringOut,
                                                                          SQL_DRIVER_NOPROMPT
);
          if (rc != SUCCEED)
                    HandleErrorDBC(o_hdbc1);

          // Connection 6

          sprintf( szDriverString , "DRIVER={SQL
Server};SERVER=%s;UID=%s;PWD=%s;DATABASE=%s" ,
                                                                  aptr->server,
                                                                  aptr->user,
                                                                  aptr->password,
                                                                  aptr->database );

          rc = SQLSetConnectOption (o_hdbc2, SQL_PACKET_SIZE, aptr->pack_size);
          if (rc != SUCCEED)
                    HandleErrorDBC(o_hdbc2);
```


Copyright Dell

```
          rc = SQLDriverConnect ( o_hdbc2,
                                                                  NULL,

          (SQLCHAR*)&szDriverString[0] ,
                                                                  SQL_NTS,

          (SQLCHAR*)&szDriverStringOut[0],

          sizeof(szDriverStringOut),
                                                                  &cbDriverStringOut,
                                                                  SQL_DRIVER_NOPROMPT
);
          if (rc != SUCCEED)
                    HandleErrorDBC(o_hdbc2);

          // Connection 7

          sprintf( szDriverString , "DRIVER={SQL
Server};SERVER=%s;UID=%s;PWD=%s;DATABASE=%s" ,
                                                                aptr->server,
                                                                aptr->user,
                                                                aptr->password,
                                                                aptr->database );

          rc = SQLSetConnectOption (o_hdbc3, SQL_PACKET_SIZE, aptr->pack_size);
          if (rc != SUCCEED)
                    HandleErrorDBC(o_hdbc3);

          rc = SQLDriverConnect ( o_hdbc3,
                                                                  NULL,

          (SQLCHAR*)&szDriverString[0] ,
                                                                  SQL_NTS,

          (SQLCHAR*)&szDriverStringOut[0],

          sizeof(szDriverStringOut),
                                                                  &cbDriverStringOut,
                                                                  SQL_DRIVER_NOPROMPT
);
          if (rc != SUCCEED)
                    HandleErrorDBC(o_hdbc3);

}

//=====================================================================
//
// Function name: BuildIndex
//
//=====================================================================

void BuildIndex(char          *index_script)
{
          char      cmd[256];

          printf("Starting index creation:  %s\n",index_script);

          sprintf(cmd, "isql -S%s -U%s -P%s -e -i%s\\%s.sql > logs\\%s.log",
                                        aptr->server,
                                        aptr->user,
                                        aptr->password,
                                        aptr->index_script_path,
                                        index_script,
                                        index_script);

          system(cmd);

          printf("Finished index creation:  %s\n",index_script);
}


void HandleErrorDBC (SQLHDBC  hdbc1)
{

          SQLCHAR            SqlState[6], Msg[SQL_MAX_MESSAGE_LENGTH];
          SQLINTEGER  NativeError;
          SQLSMALLINT i, MsgLen;
          SQLRETURN   rc2;
          char               timebuf[128];
          char               datebuf[128];
          FILE               *fp1;

          i = 1;
          while (( rc2 = SQLGetDiagRec(SQL_HANDLE_DBC , hdbc1, i, SqlState ,
&NativeError,
                                        Msg, sizeof(Msg) , &MsgLen )) != SQL_NO_DATA )
          {

                    sprintf( szLastError , "%s" ,  Msg );

                    _strtime(timebuf);
                    _strdate(datebuf);

                    printf( "[%s : %s] %s\n" , datebuf, timebuf, szLastError);

                    fp1 = fopen("logs\\tpccldr.err","w");
                    if (fp1 == NULL)
                              printf("ERROR:  Unable to open errorlog file.\n");
                    else
                    {
                              fprintf(fp1, "[%s : %s] %s\n" , datebuf, timebuf,
szLastError);
                              fclose(fp1);
                    }

                    i++;

          }
}


void FormatDate ( char* szTimeCOutput )
{

          struct tm when;
          time_t now;

          time( &now );
          when  = *localtime( &now );

          mktime( &when );

          // odbc datetime format
          strftime( szTimeCOutput , 30 , "%Y-%m-%d %H:%M:%S.000", &when );
```

```
        return;

}
```

getargs.c

```
//      File:           GETARGS.C
//                              Microsoft TPC-C Kit Ver. 4.00
//                              Copyright Microsoft, 1996, 1997, 1998
//      Purpose:  Source file for command line processing


// Includes
#include "tpcc.h"

//=========================================================================
//
// Function name: GetArgsLoader
//
//=========================================================================

void GetArgsLoader(int argc, char **argv, TPCCLDR_ARGS *pargs)
{
    int             i;
    char  *ptr;

#ifdef DEBUG
    printf("[%ld]DBG: Entering GetArgsLoader()\n", (int) GetCurrentThreadId());
#endif

    /* init args struct with some useful values */
    pargs->server                       =  SERVER;
    pargs->user                         =  USER;
    pargs->password                     =  PASSWORD;
    pargs->database                     =  DATABASE;
    pargs->batch                        =  BATCH;
    pargs->num_warehouses               =  UNDEF;
        pargs->tables_all                       =  TRUE;
        pargs->table_item                       =  FALSE;
        pargs->table_warehouse                  =  FALSE;
        pargs->table_customer                   =  FALSE;
        pargs->table_orders                     =  FALSE;
        pargs->loader_res_file                  =  LOADER_RES_FILE;
        pargs->pack_size                        =  DEFLDPACKSIZE;
        pargs->starting_warehouse       =  DEF_STARTING_WAREHOUSE;
        pargs->build_index                      =  BUILD_INDEX;
        pargs->index_order                      =  INDEX_ORDER;
        pargs->index_script_path        =  INDEX_SCRIPT_PATH;
        pargs->scale_down                       =  SCALE_DOWN;

    /* check for zero command line args */
    if ( argc == 1 )
                GetArgsLoaderUsage();

    for (i = 1; i < argc; ++i)
    {
                if (argv[i][0] != '-' && argv[i][0] != '/')
                {
                printf("\nUnrecognized command");
                GetArgsLoaderUsage();
                exit(1);
                }

                ptr = argv[i];

                switch (ptr[1])
                {
                case 'h':       /* Fall throught */
                case 'H':
                                GetArgsLoaderUsage();
                                break;

                case 'D':
                                pargs->database = ptr+2;
                                break;

                case 'P':
                                pargs->password = ptr+2;
                                break;

                case 'S':
                                pargs->server = ptr+2;
                                break;

                case 'U':
                                pargs->user = ptr+2;
                                break;

                case 'b':
                                pargs->batch = atol(ptr+2);
                                break;

                case 'W':
                                pargs->num_warehouses = atol(ptr+2);
                                break;

                case 's':
                                pargs->starting_warehouse = atol(ptr+2);
                                break;

                case 't':
                                {
                                        pargs->tables_all = FALSE;
                                        if (strcmp(ptr+2,"item") == 0)
```

```
                                                        pargs->table_item = TRUE;
                                                else if (strcmp(ptr+2,"warehouse") ==
0)
                                                        pargs->table_warehouse =
TRUE;
                                                else if (strcmp(ptr+2,"customer") == 0)
                                                        pargs->table_customer = TRUE;
                                                else if (strcmp(ptr+2,"orders") == 0)
                                                        pargs->table_orders = TRUE;
                                                else
                                                {
                                                printf("\nUnrecognized command");
                                                GetArgsLoaderUsage();
                                                exit(1);
                                                }

                                                break;
                                        }

                                case 'f':
                                        pargs->loader_res_file = ptr+2;
                                        break;

                                case 'p':
                                        pargs->pack_size = atol(ptr+2);
                                        break;

                                case 'i':
                                        pargs->build_index = atol(ptr+2);
                                        break;

                                case 'o':
                                        pargs->index_order = atol(ptr+2);
                                        break;

                                case 'c':
                                        pargs->scale_down = atol(ptr+2);
                                        break;

                        case 'd':
                                        pargs->index_script_path = ptr+2;
                                        break;

                        default:
                                GetArgsLoaderUsage();
                                exit(-1);
                                break;
                        }
    }

    /* check for required args */
    if (pargs->num_warehouses == UNDEF )
    {
                        printf("Number of Warehouses is required\n");
                        exit(-2);
    }

    return;
}


//=====================================================================
//
```

```
// Function name: GetArgsLoaderUsage
//
//=====================================================================

void GetArgsLoaderUsage()
{

#ifdef DEBUG
    printf("[%ld]DBG: Entering GetArgsLoaderUsage()\n", (int) GetCurrentThreadId());
#endif


    printf("TPCCLDR:\n\n");
          printf("Parameter                                                    Default\n");
          printf("-------------------------------------------------------------\n");
    printf("-W Number of Warehouses to Load                      Required \n");
    printf("-S Server                                            %s\n", SERVER);
    printf("-U Username                                          %s\n", USER);
    printf("-P Password                                          %s\n", PASSWORD);
    printf("-D Database                                          %s\n", DATABASE);
          printf("-b Batch Size                                        %ld\n", (long)
BATCH);
          printf("-p TDS packet size                                   %ld\n", (long)
DEFLDPACKSIZE);
          printf("-f Loader Results Output Filename                    %s\n",
LOADER_RES_FILE);
          printf("-s Starting Warehouse                                %ld\n", (long)
DEF_STARTING_WAREHOUSE);
          printf("-i Build Option (data = 0, data and index = 1)       %ld\n", (long)
BUILD_INDEX);
          printf("-o Cluster Index Build Order (before = 1, after = 0)  %ld\n", (long)
INDEX_ORDER);
          printf("-c Build Scaled Database (normal = 0, tiny = 1)      %ld\n", (long)
SCALE_DOWN);
          printf("-d Index Script Path                                 %s\n",
INDEX_SCRIPT_PATH);
          printf("-t Table to Load                                     all tables \n");
    printf("   [item|warehouse|customer|orders]\n");
    printf("   Notes: \n");
    printf("     - the '-t' parameter may be included multiple times to \n");
    printf("       specify multiple tables to be loaded \n");
    printf("     - 'item' loads ITEM table \n");
    printf("     - 'warehouse' loads WAREHOUSE, DISTRICT, and STOCK tables \n");
    printf("     - 'customer' loads CUSTOMER and HISTORY tables \n");
    printf("     - 'orders' load NEW-ORDER, ORDERS, ORDER-LINE tables \n");

          printf("\nNote:  Command line switches are case sensitive.\n");

    exit(0);
}
```

random.c

```
//        File:               RANDOM.C
//                                  Microsoft TPC-C Kit Ver. 4.00
//                                  Copyright Microsoft, 1996, 1997, 1998
```

```
//        Purpose:  Random number generation routines for database loader


// Includes
#include "tpcc.h"
#include "math.h"

// Defines
#define A            16807
#define M       2147483647
#define Q           127773      /* M div A */
#define R             2836      /* M mod A */
#define Thread      __declspec(thread)

// Globals
long      Thread Seed = 0;       /* thread local seed */

/*****************************************************************************
*                                                                            *
* random -                                                                   *
*       Implements a GOOD pseudo random number generator.  This generator    *
*       will/should? run the complete period before repeating.               *
*                                                                            *
* Copied from:                                                               *
*       Random Numbers Generators: Good Ones Are Hard to Find.               *
*       Communications of the ACM - October 1988 Volume 31 Number 10         *
*                                                                            *
* Machine Dependencies:                                                      *
*       long must be 2 ^ 31 - 1 or greater.                                   *
*                                                                            *
*****************************************************************************/

/*****************************************************************************
* seed - load the Seed value used in irand and drand.  Should be used before *
*       first call to irand or drand.                                        *
*****************************************************************************/

void seed(long val)
{

#ifdef DEBUG
    printf("[%ld]DBG: Entering seed()...\n", (int) GetCurrentThreadId());
          printf("Old Seed %ld New Seed %ld\n",Seed, val);
#endif

    if ( val < 0 )
              val = abs(val);

    Seed = val;

}


/*****************************************************************************
*                                                                            *
* irand - returns a 32 bit integer pseudo random number with a period of     *
*       1 to 2 ^ 32 - 1.                                                     *
*                                                                            *
* parameters:                                                                *
*       none.                                                                *
*                                                                            *
* returns:                                                                   *
*       32 bit integer - defined as long ( see above ).                      *
*                                                                            *
* side effects:                                                              *
*       seed get recomputed.                                                 *
*****************************************************************************/

long irand()
{
    register long    s;      /* copy of seed */
    register long    test;   /* test flag */
    register long    hi;     /* tmp value for speed */
    register long    lo;     /* tmp value for speed */

#ifdef DEBUG
    printf("[%ld]DBG: Entering irand()...\n", (int) GetCurrentThreadId());
#endif

    s = Seed;
    hi = s / Q;
    lo = s % Q;

    test = A * lo - R * hi;
    if ( test > 0 )
                    Seed = test;
    else
                    Seed = test + M;

    return( Seed );
}


/*****************************************************************************
*                                                                            *
* drand - returns a double pseudo random number between 0.0 and 1.0.         *
*       See irand.                                                           *
*****************************************************************************/
double drand()
{

#ifdef DEBUG
    printf("[%ld]DBG: Entering drand()...\n", (int) GetCurrentThreadId());
#endif

    return( (double)irand() / 2147483647.0);
}


//=====================================================================
// Function   : RandomNumber
//
// Description:
//=====================================================================
long RandomNumber(long lower, long upper)
{
    long rand_num;

#ifdef DEBUG
    printf("[%ld]DBG: Entering RandomNumber()...\n", (int) GetCurrentThreadId());
#endif

          if ( upper == lower )         /* pgd 08-13-96 perf enhancement */
                    return lower;

          upper++;
```

```
    if ( upper <= lower )
                    rand_num = upper;
    else
                    rand_num = lower + irand() % (upper - lower); /* pgd 08-13-96 perf
enhancement */


#ifdef DEBUG
    printf("[%ld]DBG: RandomNumber between %ld & %ld ==> %ld\n",
                                        (int) GetCurrentThreadId(), lower, upper,
rand_num);
#endif


    return rand_num;
}


#if 0

//Orginal code pgd 08/13/96

long RandomNumber(long lower,
                                            long upper)
{
    long rand_num;

#ifdef DEBUG
    printf("[%ld]DBG: Entering RandomNumber()...\n", (int) GetCurrentThreadId());
#endif

          upper++;

    if ((upper <= lower))
                    rand_num = upper;
    else
                    rand_num = lower + irand() % ((upper > lower) ? upper - lower :
upper);


#ifdef DEBUG
    printf("[%ld]DBG: RandomNumber between %ld & %ld ==> %ld\n",
                                        (int) GetCurrentThreadId(), lower, upper,
rand_num);
#endif


    return rand_num;
}
#endif

//=========================================================================
// Function   : NURand
//
// Description:
//=========================================================================
long NURand(int iConst,
              long x,
              long y,
              long C)
{
    long rand_num;

#ifdef DEBUG
    printf("[%ld]DBG: Entering NURand()...\n", (int) GetCurrentThreadId());
#endif

    rand_num = (((RandomNumber(0,iConst) | RandomNumber(x,y)) + C) % (y-x+1))+x;

#ifdef DEBUG
    printf("[%ld]DBG: NURand: num = %d\n", (int) GetCurrentThreadId(), rand_num);
#endif

    return rand_num;
}
```

strings.c

```
//        File:               STRINGS.C
//                                  Microsoft TPC-C Kit Ver. 4.00
//                                  Copyright Microsoft, 1996, 1997, 1998
//        Purpose:  Source file for database loader string functions


// Includes
#include "tpcc.h"
#include <string.h>
#include <ctype.h>

//=========================================================================
//
// Function name: MakeAddress
//
//=========================================================================

void MakeAddress(char *street_1,
                                         char *street_2,
                                         char *city,
                                         char *state,
                                         char *zip)
{

#ifdef DEBUG
    printf("[%ld]DBG: Entering MakeAddress()\n", (int) GetCurrentThreadId());
#endif

    MakeAlphaString (10, 20, ADDRESS_LEN, street_1);
    MakeAlphaString (10, 20, ADDRESS_LEN, street_2);
    MakeAlphaString (10, 20, ADDRESS_LEN, city);
    MakeAlphaString ( 2,  2, STATE_LEN, state);
    MakeZipNumberString( 9,  9, ZIP_LEN, zip);

#ifdef DEBUG
    printf("[%ld]DBG: MakeAddress: street_1: %s, street_2: %s, city: %s, state: %s, zip:
%s\n",
                                  (int) GetCurrentThreadId(), street_1, street_2, city,
state, zip);
#endif
```


Copyright Dell

```
    return;

}


//=====================================================================
//
// Function name: LastName
//
//=====================================================================

void LastName(int  num,
                        char *name)
{
    static char *n[] =
    {
                    "BAR" , "OUGHT", "ABLE" , "PRI"  , "PRES",
                    "ESE" , "ANTI" , "CALLY", "ATION", "EING"
    };

#ifdef DEBUG
    printf("[%ld]DBG: Entering LastName()\n", (int) GetCurrentThreadId());
#endif

    if ((num >= 0) && (num < 1000))
    {
                    strcpy(name, n[(num/100)%10]);
                    strcat(name, n[(num/10)%10]);
                    strcat(name, n[(num/1)%10]);

                    if (strlen(name) < LAST_NAME_LEN)
                    {
                              PaddString(LAST_NAME_LEN, name);
                    }

    }
    else
    {
                    printf("\nError in LastName()... num <%ld> out of range (0,999)\n",
num);
                    exit(-1);
    }


#ifdef DEBUG
    printf("[%ld]DBG: LastName: num = [%d] ==> [%d][%d][%d]\n",
                         (int) GetCurrentThreadId(), num, num/100, (num/10)%10,
num%10);
          printf("[%ld]DBG: LastName: String = %s\n", (int) GetCurrentThreadId(), name);
#endif

    return;

}


//=====================================================================
//
// Function name: MakeAlphaString
//
//=====================================================================
//philipdu 08/13/96 Changed MakeAlphaString to use A-Z, a-z, and 0-9 in
//accordance with spec see below:
//The spec says:
//4.3.2.2 The notation random a-string [x .. y]
//(respectively, n-string [x .. y]) represents a string of random alphanumeric
//(respectively, numeric) characters of a random length of minimum x, maximum y,
//and mean (y+x)/2. Alphanumerics are A..Z, a..z, and 0..9.  The only other
//requirement is that the character set used "must be able to represent a minimum
//of 128 different characters".  We are using 8-bit chars, so this is a non issue.
//It is completely unreasonable to stuff non-printing chars into the text fields.
//-CLevine 08/13/96

int MakeAlphaString( int  x, int  y, int  z, char *str)
{
          int                 len;
          int                 i;
          static    char chArray[] =
"0123456789ABCDEFGHIJKLMNOPQRSTUVWXYZabcdefghijklmnopqrstuvwxyz";
          static    int       chArrayMax = 61;

#ifdef DEBUG
    printf("[%ld]DBG: Entering MakeAlphaString()\n", (int) GetCurrentThreadId());
#endif

          len= RandomNumber(x, y);

          for (i=0; i<len; i++)
                    str[i] = chArray[RandomNumber(0, chArrayMax)];
          if ( len < z )
                    memset(str+len, ' ', z - len);
          str[len] = 0;

    return len;
}


//=====================================================================
//
// Function name: MakeOriginalAlphaString
//
//=====================================================================

int MakeOriginalAlphaString(int  x,
                                                                    int  y,
                                                                         int  z,
                                                                    char *str,
                                                                int  percent)
{
    int             len;
    int             val;
    int             start;

#ifdef DEBUG
    printf("[%ld]DBG: Entering MakeOriginalAlphaString()\n", (int) GetCurrentThreadId());
#endif

    // verify prercentage is valid
    if ((percent < 0) || (percent > 100))
    {
                    printf("MakeOrigianlAlphaString: Invalid percentage: %d\n", percent);
                    exit(-1);
    }
```

```
    // verify string is at least 8 chars in length
    if ((x + y) <= 8)
    {
                    printf("MakeOriginalAlphaString: string length must be >= 8\n");
                    exit(-1);
    }

    // Make Alpha String
    len = MakeAlphaString(x,y, z, str);

    val = RandomNumber(1,100);
    if (val <= percent)
    {
                    start = RandomNumber(0, len - 8);
                    strncpy(str + start, "ORIGINAL", 8);
    }


#ifdef DEBUG
    printf("[%ld]DBG: MakeOriginalAlphaString: : %s\n",
                                (int) GetCurrentThreadId(), str);
#endif

    return strlen(str);
}


//=====================================================================
//
// Function name: MakeNumberString
//
//=====================================================================
int MakeNumberString(int  x, int  y, int  z, char *str)
{
          char tmp[16];

          //MakeNumberString is always called MakeZipNumberString(16, 16, 16, string)

          memset(str, '0', 16);
          itoa(RandomNumber(0, 99999999), tmp, 10);
          memcpy(str, tmp, strlen(tmp));

          itoa(RandomNumber(0, 99999999), tmp, 10);
          memcpy(str+8, tmp, strlen(tmp));

          str[16] = 0;

    return 16;
}


//=====================================================================
//
// Function name: MakeZipNumberString
//
//=====================================================================
int MakeZipNumberString(int  x, int  y, int  z, char *str)
{
          char tmp[16];

          //MakeZipNumberString is always called MakeZipNumberString(9, 9, 9, string)

          strcpy(str, "000011111");

          itoa(RandomNumber(0, 9999), tmp, 10);
          memcpy(str, tmp, strlen(tmp));

    return 9;
}


//=====================================================================
//
// Function name: InitString
//
//=====================================================================
void InitString(char *str, int len)
{
#ifdef DEBUG
    printf("[%ld]DBG: Entering InitString()\n", (int) GetCurrentThreadId());
#endif

          memset(str, ' ', len);
    str[len] = 0;
}


//=====================================================================
// Function name: InitAddress
//
// Description:
//
//=====================================================================

void InitAddress(char *street_1, char *street_2, char *city, char *state, char *zip)
{
          memset(street_1, ' ', ADDRESS_LEN+1);
          memset(street_2, ' ', ADDRESS_LEN+1);
          memset(city, ' ', ADDRESS_LEN+1);

    street_1[ADDRESS_LEN+1] = 0;
    street_2[ADDRESS_LEN+1] = 0;
    city[ADDRESS_LEN+1]     = 0;

          memset(state, ' ', STATE_LEN+1);
    state[STATE_LEN+1] = 0;

          memset(zip, ' ', ZIP_LEN+1);
    zip[ZIP_LEN+1] = 0;
}


//=====================================================================
//
// Function name: PaddString
//
//=====================================================================

void PaddString(int max, char *name)
{
          int                 len;

          len = strlen(name);
          if ( len < max )
                    memset(name+len, ' ', max - len);
          name[max] = 0;
```

```
        return;
}
```

time.c

```
//      File:           TIME.C
//                              Microsoft TPC-C Kit Ver. 4.00
//                              Copyright Microsoft, 1996, 1997, 1998
//      Purpose:  Source file for time functions


// Includes
#include "tpcc.h"

// Globals
static long start_sec;


//=====================================================================
//
// Function name: TimeNow
//
//=====================================================================

long TimeNow()
{
   long            time_now;
   struct _timeb el_time;

#ifdef DEBUG
    printf("[%ld]DBG: Entering TimeNow()\n", (int) GetCurrentThreadId());
#endif

   _ftime(&el_time);

   time_now = ((el_time.time - start_sec) * 1000) + el_time.millitm;

   return time_now;
}
```


Copyright Dell

Appendix C - Tunable Parameters

Server Configuration Parameters

Microsoft Windows .NET Enterprise Server Parameters

The following registry key was added to disable the kernel counters for Global and Per-Process I/Os:

```
[HKEY_LOCAL_MACHINE\SYSTEM\CurrentControlSet\Control\Session Manager\I/O System]
"CountOperations"=dword:00000000
```

Microsoft Windows .NET Enterprise Server Configuration

The following services were disabled on the server:

- Alerter
- Automatic Updates
- Computer Browser
- Cryptographic Services
- DHCP Client
- Distributed File System
- Distributed Link Tracking Client
- DNS Client
- Global Array Manager Server
- Help and Support
- IPSEC Policy Agent
- License Logging Service
- Messenger
- MSSQLserver
- Microsoft Search
- Print Spooler
- Process Control Service
- Remote Registry Service
- Removable Storage
- Run as Service
- System Event Notification
- SSDP Discovery service
- Task Scheduler
- Wireless configuration

Microsoft SQL Server 2000 Startup Parameters

Microsoft SQL Server was started with the following command line options

sqlservr -c -x -T3502 –g150

where

-c	Start SQL Server independently of the Microsoft Windows NT Service

Copyright Dell

	Control Manager.
-x	Disable the keeping of CPU time and cache-hit ratio statistics.
-T3502	Prints a message to the log at the beginning and end of each checkpoint.
-g150	Reserve 100 MB for non-buffer pool allocations

Microsoft SQL Server Stack Size

The default stack size of Microsoft SQL Server was changed using the EDITBIN utility. The EDITBIN utility ships with Microsoft Visual C++ V5.0. The command used was editbin /stack:131072 sqlservr.exe.

Microsoft SQL Server 2000 Configuration Parameters

name	minimum	maximum	config_value	run_value
affinity mask	0	2147483647	255	255
allow updates	0	1	1	1
c2 audit mode	0	1	0	0
cost threshold for parallelism	0	32767	5	5
cursor threshold	-1	2147483647	-1	-1
default full-text language	0	2147483647	1033	1033
default language	0	9999	0	0
fill factor (%)	0	100	0	0
index create memory (KB)	704	1600000	0	0
language in cache	3	100	3	3
lightweight pooling	0	1	1	1
locks	5000	2147483647	0	0
max degree of parallelism	0	32	1	1
max server memory (MB)	4	2147483647	30000	30000
max text repl size (B)	0	2147483647	65536	65536
max worker threads	10	1024	320	320
media retention	0	365	0	0
min memory per query (KB)	512	2147483647	1024	1024
min server memory (MB)	0	2147483647	0	0
nested triggers	0	1	1	1
network packet size (B)	512	65535	4096	4096
open objects	0	2147483647	0	0
priority boost	0	1	1	1
query governor cost limit	0	2147483647	0	0
query wait (s)	-1	2147483647	-1	-1
recovery interval (min)	0	32767	104	104
remote access	0	1	0	0
remote login timeout (s)	0	2147483647	5	5
remote proc trans	0	1	0	0
remote query timeout (s)	0	2147483647	0	0
scan for startup procs	0	1	0	0
set working set size	0	1	0	0
show advanced options	0	1	1	1
two digit year cutoff	1753	9999	2049	2049
user connections	0	32767	0	0
user options	0	16383	0	0

Copyright Dell

Windows .NET Enterprise Server System Information Report For PE6600

System Information report written at: 05/20/03 11:34:09
System Name: PE6500
[System Summary]
Item Value
OS Name Microsoft® Windows® .NET Enterprise Server
Version 5.2.3663 Build 3663
OS Manufacturer Microsoft Corporation
System Name PE6500
System Manufacturer Dell Computer Corporation
System Model PowerEdge 6600
System Type X86-based PC
Processor x86 Family 15 Model 2 Stepping 5 GenuineIntel ~2785 Mhz
Processor x86 Family 15 Model 2 Stepping 5 GenuineIntel ~2785 Mhz
Processor x86 Family 15 Model 2 Stepping 5 GenuineIntel ~2785 Mhz
Processor x86 Family 15 Model 2 Stepping 5 GenuineIntel ~2785 Mhz
Processor x86 Family 15 Model 2 Stepping 5 GenuineIntel ~2785 Mhz
Processor x86 Family 15 Model 2 Stepping 5 GenuineIntel ~2785 Mhz
Processor x86 Family 15 Model 2 Stepping 5 GenuineIntel ~2785 Mhz
Processor x86 Family 15 Model 2 Stepping 5 GenuineIntel ~2785 Mhz
BIOS Version/Date Dell Computer Corporation X37, 4/25/2003
SMBIOS Version 2.3
Windows Directory C:\WINDOWS
System Directory C:\WINDOWS\system32
Boot Device \Device\HarddiskVolume1
Locale United States
Hardware Abstraction Layer Version = "5.2.3663.0 (main.020715-1506)"
User Name PE6500\Administrator
Time Zone Central Daylight Time
Total Physical Memory 32,768.00 MB
Available Physical Memory 1.48 GB
Total Virtual Memory 110.98 GB
Available Virtual Memory 51.49 GB
Page File Space 79.73 GB
Page File V:\pagefile.sys
[Hardware Resources]

[Conflicts/Sharing]

Resource Device
Memory Address 0xF0000000-0xFCFFFFFF PCI bus
Memory Address 0xF0000000-0xFCFFFFFF DELL PERC 3/QC Plus RAID Controller

I/O Port 0x00000000-0x000003AF PCI bus
I/O Port 0x00000000-0x000003AF Direct memory access controller

IRQ 15 System board
IRQ 15 Secondary IDE Channel

Memory Address 0xFD000000-0xFE1FFFFF PCI bus
Memory Address 0xFD000000-0xFE1FFFFF RAGE XL PCI (Microsoft Corporation)

Copyright Dell

Memory Address 0xE0000000-0xEFDFFFFF PCI bus
Memory Address 0xE0000000-0xEFDFFFFF DELL PERC 3/QC Plus RAID Controller

Memory Address 0xA0000-0xBFFFF PCI bus
Memory Address 0xA0000-0xBFFFF RAGE XL PCI (Microsoft Corporation)

I/O Port 0x000003B0-0x000003DF PCI bus
I/O Port 0x000003B0-0x000003DF RAGE XL PCI (Microsoft Corporation)

Memory Address 0xD4000000-0xDFFFFFFF PCI bus
Memory Address 0xD4000000-0xDFFFFFFF DELL PERC 3/QC Plus RAID Controller

[DMA]

Resource Device Status
Channel 4 Direct memory access controller OK
Channel 2 Standard floppy disk controller OK

[Forced Hardware]

Device PNP Device ID

[I/O]

Resource Device Status
0x00000000-0x000003AF PCI bus OK
0x00000000-0x000003AF Direct memory access controller OK
0x000003B0-0x000003DF PCI bus OK
0x000003B0-0x000003DF RAGE XL PCI (Microsoft Corporation) OK
0x000003E0-0x00000CF7 PCI bus OK
0x00000D00-0x00000FFF PCI bus OK
0x0000E000-0x0000EFFF PCI bus OK
0x0000EC00-0x0000ECFF Adaptec AIC-7892 Ultra160 PCI SCSI Card OK
0x0000E800-0x0000E8FF RAGE XL PCI (Microsoft Corporation) OK
0x000003C0-0x000003DF RAGE XL PCI (Microsoft Corporation) OK
0x00000080-0x0000009F Direct memory access controller OK
0x000000C0-0x000000DF Direct memory access controller OK
0x0000040B-0x0000040B Direct memory access controller OK
0x000004D6-0x000004D6 Direct memory access controller OK
0x000000F0-0x000000FF Numeric data processor OK
0x00000020-0x0000003F Programmable interrupt controller OK
0x000000A0-0x000000BF Programmable interrupt controller OK
0x000004D0-0x000004D1 Programmable interrupt controller OK
0x00000061-0x00000061 System speaker OK
0x00000040-0x0000005F System timer OK
0x000003F0-0x000003F5 Standard floppy disk controller OK
0x000003F7-0x000003F7 Standard floppy disk controller OK
0x00000060-0x00000060 Standard 101/102-Key or Microsoft Natural PS/2 Keyboard OK
0x00000064-0x00000064 Standard 101/102-Key or Microsoft Natural PS/2 Keyboard OK
0x000003F8-0x000003FF Communications Port (COM1) OK
0x00000070-0x0000007F System CMOS/real time clock OK
0x00000800-0x0000087F System board OK

Copyright Dell

```
0x000008A0-0x000008AF        System board    OK
0x000008E0-0x000008E3        System board    OK
0x000000E0-0x000000EF        System board    OK
0x00000C00-0x00000CD7        System board    OK
0x00000F50-0x00000F58        System board    OK
0x000008B0-0x000008BF        Standard Dual Channel PCI IDE Controller        OK
0x000001F0-0x000001F7        Primary IDE Channel     OK
0x000003F6-0x000003F6        Primary IDE Channel     OK
0x00000170-0x00000177        Secondary IDE ChannelOK
0x00000376-0x00000376        Secondary IDE ChannelOK
0x00000A79-0x00000A79        ISAPNP Read Data Port           OK
0x00000279-0x00000279        ISAPNP Read Data Port           OK
0x00000274-0x00000277        ISAPNP Read Data Port           OK
0x0000D000-0x0000DFFF        PCI busOK
0x0000B000-0x0000CFFF        PCI busOK
0x0000A000-0x0000AFFF        PCI busOK
0x0000AC00-0x0000ACFF        QLogic QLA23xx PCI Fibre Channel Adapter      OK

[IRQs]

Resource        Device  Status
IRQ 9   Microsoft ACPI-Compliant System         OK
IRQ 16  Adaptec AIC-7892 Ultra160 PCI SCSI Card         OK
IRQ 13  Numeric data processor OK
IRQ 0   System timer    OK
IRQ 6   Standard floppy disk controller   OK
IRQ 1   Standard 101/102-Key or Microsoft Natural PS/2 Keyboard         OK
IRQ 12  PS/2 Compatible MouseOK
IRQ 4   Communications Port (COM1)   OK
IRQ 8   System CMOS/real time clock   OK
IRQ 15  System board   OK
IRQ 15  Secondary IDE ChannelOK
IRQ 14  Primary IDE Channel     OK
IRQ 21  DELL PERC 3/QC Plus RAID Controller OK
IRQ 22  DELL PERC 3/QC Plus RAID Controller OK
IRQ 17  Broadcom NetXtreme Gigabit Ethernet #2          OK
IRQ 18  Broadcom NetXtreme Gigabit Ethernet   OK
IRQ 25  DELL PERC 3/QC Plus RAID Controller OK
IRQ 26  DELL PERC 3/QC Plus RAID Controller OK
IRQ 23  DELL PERC 3/QC Plus RAID Controller OK
IRQ 24  DELL PERC 3/QC Plus RAID Controller OK
IRQ 27  QLogic QLA23xx PCI Fibre Channel Adapter      OK

[Memory]

Resource        Device  Status
0xA0000-0xBFFFF         PCI busOK
0xA0000-0xBFFFF         RAGE XL PCI (Microsoft Corporation)     OK
0xDC000-0xE7FFF         PCI busOK
0xFD000000-0xFE1FFFFF        PCI busOK
0xFD000000-0xFE1FFFFF        RAGE XL PCI (Microsoft Corporation)     OK
0xFE101000-0xFE101FFF        Adaptec AIC-7892 Ultra160 PCI SCSI Card        OK
0xFE100000-0xFE100FFF        RAGE XL PCI (Microsoft Corporation)     OK
0xF0000000-0xFCFFFFFF        PCI busOK
0xF0000000-0xFCFFFFFF        DELL PERC 3/QC Plus RAID Controller OK
```


Copyright Dell

0xF8000000-0xF9FFFFFF DELL PERC 3/QC Plus RAID Controller OK
0xEFE00000-0xEFFFFFFF PCI busOK
0xEFF10000-0xEFF1FFFF Broadcom NetXtreme Gigabit Ethernet #2 OK
0xEFF00000-0xEFF0FFFF Broadcom NetXtreme Gigabit Ethernet OK
0xE0000000-0xEFDFFFFF PCI busOK
0xE0000000-0xEFDFFFFF DELL PERC 3/QC Plus RAID Controller OK
0xE8000000-0xEBFFFFFF DELL PERC 3/QC Plus RAID Controller OK
0xD4000000-0xDFFFFFFF PCI busOK
0xD4000000-0xDFFFFFFF DELL PERC 3/QC Plus RAID Controller OK
0xD8000000-0xDBFFFFFF DELL PERC 3/QC Plus RAID Controller OK
0xD2B00000-0xD3FFFFFF PCI busOK
0xD2900000-0xD2AFFFFF PCI busOK
0xD2A00000-0xD2A00FFF QLogic QLA23xx PCI Fibre Channel Adapter OK

[Components]

[Multimedia]

[Audio Codecs]

CODEC Manufacturer Description Status File Version Size Creation Date
c:\windows\system32\msg723.acm Microsoft Corporation OK
C:\WINDOWS\system32\MSG723.ACM 4.4.4000 116.00 KB (118,784 bytes)
9/25/2002 12:08 PM
c:\windows\system32\l3codeca.acm Fraunhofer Institut Integrierte Schaltungen IIS
Fraunhofer IIS MPEG Layer-3 Codec OK
C:\WINDOWS\system32\L3CODECA.ACM 1, 9, 0, 0305 284.00 KB (290,816
bytes) 7/29/2002 1:25 PM
c:\windows\system32\msadp32.acm Microsoft Corporation OK
C:\WINDOWS\system32\MSADP32.ACM 5.2.3663.0 (main.020715-1506) 14.50
KB (14,848 bytes) 7/29/2002 1:31 PM
c:\windows\system32\msaud32.acm Microsoft Corporation Windows Media Audio Codec
OK C:\WINDOWS\system32\MSAUD32.ACM 8.00.00.4477 288.00 KB
(294,912 bytes) 7/29/2002 1:31 PM
c:\windows\system32\msg711.acm Microsoft Corporation OK
C:\WINDOWS\system32\MSG711.ACM 5.2.3663.0 (main.020715-1506) 10.00 KB
(10,240 bytes) 7/29/2002 1:32 PM
c:\windows\system32\tssoft32.acm DSP GROUP, INC. OK
C:\WINDOWS\system32\TSSOFT32.ACM 1.01 9.50 KB (9,728 bytes)
7/29/2002 2:00 PM
c:\windows\system32\msgsm32.acm Microsoft Corporation OK
C:\WINDOWS\system32\MSGSM32.ACM 5.2.3663.0 (main.020715-1506) 20.00
KB (20,480 bytes) 7/29/2002 1:32 PM
c:\windows\system32\sl_anet.acm Sipro Lab Telecom Inc. Sipro Lab Telecom Audio Codec
OK C:\WINDOWS\system32\SL_ANET.ACM 3.02 84.00 KB (86,016 bytes)
7/29/2002 1:56 PM
c:\windows\system32\imaadp32.acm Microsoft Corporation OK
C:\WINDOWS\system32\IMAADP32.ACM 5.2.3663.0 (main.020715-1506) 15.50
KB (15,872 bytes) 7/29/2002 1:22 PM

[Video Codecs]

Copyright Dell

CODEC Manufacturer Description Status File Version Size Creation Date
c:\windows\system32\msh261.drv Microsoft Corporation OK
C:\WINDOWS\system32\MSH261.DRV 4.4.4000 180.00 KB (184,320 bytes)
9/25/2002 12:08 PM
c:\windows\system32\tsbyuv.dll Microsoft Corporation OK
C:\WINDOWS\system32\TSBYUV.DLL 5.2.3663.0 (main.020715-1506) 8.00 KB (8,192
bytes) 7/16/2002 8:48 AM
c:\windows\system32\iyuv_32.dll Microsoft Corporation OK
C:\WINDOWS\system32\IYUV_32.DLL 5.2.3663.0 (main.020715-1506) 45.00 KB
(46,080 bytes) 7/16/2002 8:47 AM
c:\windows\system32\ir32_32.dll Not Available OK
C:\WINDOWS\system32\IR32_32.DLL Not Available 194.50 KB (199,168 bytes)
7/29/2002 1:24 PM
c:\windows\system32\msh263.drv Microsoft Corporation OK
C:\WINDOWS\system32\MSH263.DRV 4.4.4000 280.00 KB (286,720 bytes)
7/16/2002 8:46 AM
c:\windows\system32\iccvid.dll Radius Inc. OK
C:\WINDOWS\system32\ICCVID.DLL 1.10.0.6 108.00 KB (110,592 bytes)
7/29/2002 1:21 PM
c:\windows\system32\msyuv.dll Microsoft Corporation OK
C:\WINDOWS\system32\MSYUV.DLL 5.2.3663.0 (main.020715-1506) 16.50 KB
(16,896 bytes) 7/16/2002 8:47 AM
c:\windows\system32\msrle32.dll Microsoft Corporation OK
C:\WINDOWS\system32\MSRLE32.DLL 5.2.3663.0 (main.020715-1506) 10.50 KB
(10,752 bytes) 7/29/2002 1:33 PM
c:\windows\system32\msvidc32.dll Microsoft Corporation OK
C:\WINDOWS\system32\MSVIDC32.DLL 5.2.3663.0 (main.020715-1506) 26.50
KB (27,136 bytes) 7/29/2002 1:33 PM

[CD-ROM]

Item Value
Drive P:
Description CD-ROM Drive
Media Loaded No
Media Type CD-ROM
Name TEAC CD-224E
Manufacturer (Standard CD-ROM drives)
Status OK
Transfer Rate Not Available
SCSI Target ID 0
PNP Device ID IDE\CDROMTEAC_CD-
224E_____3.7D____\5&3125DC91&0&0.0.0
Driver c:\windows\system32\drivers\cdrom.sys (5.2.3663.0 (main.020715-1506), 47.75 KB
(48,896 bytes), 7/29/2002 1:10 PM)

[Sound Device]

Item Value

[Display]

Item Value
Name RAGE XL PCI (Microsoft Corporation)

Copyright Dell

PNP Device ID PCI\VEN_1002&DEV_4752&SUBSYS_01091028&REV_27\3&13C0B0C5&0&20
Adapter Type ATI RAGE XL PCI (B41), ATI Technologies Inc. compatible
Adapter Description RAGE XL PCI (Microsoft Corporation)
Adapter RAM 8.00 MB (8,388,608 bytes)
Installed Drivers ati2drad.dll
Driver Version 5.10.2600.6009
INF File atiixpad.inf (ati2mpad section)
Color Planes 1
Color Table Entries 4294967296
Resolution 1024 x 768 x 85 hertz
Bits/Pixel 32
Memory Address 0xFD000000-0xFE1FFFFF
I/O Port 0x0000E800-0x0000E8FF
Memory Address 0xFE100000-0xFE100FFF
I/O Port 0x000003B0-0x000003DF
I/O Port 0x000003C0-0x000003DF
Memory Address 0xA0000-0xBFFFF
Driver c:\windows\system32\drivers\ati2mpad.sys (5.10.2600.6009 built by: jlu, 296.13 KB (303,232 bytes), 10/10/2002 4:51 AM)

[Infrared]

Item Value

[Input]

[Keyboard]

Item Value
Description Standard 101/102-Key or Microsoft Natural PS/2 Keyboard
Name Enhanced (101- or 102-key)
Layout 00000409
PNP Device ID ACPI\PNP0303\4&25F73A82&0
Number of Function Keys 12
I/O Port 0x00000060-0x00000060
I/O Port 0x00000064-0x00000064
IRQ Channel IRQ 1
Driver c:\windows\system32\drivers\i8042prt.sys (5.2.3663.0 (main.020715-1506), 50.50 KB (51,712 bytes), 7/29/2002 1:21 PM)

[Pointing Device]

Item Value
Hardware Type PS/2 Compatible Mouse
Number of Buttons 2
Status OK
PNP Device ID ACPI\PNP0F13\4&25F73A82&0
Power Management Supported No
Double Click Threshold 6
Handedness Right Handed Operation
IRQ Channel IRQ 12
Driver c:\windows\system32\drivers\i8042prt.sys (5.2.3663.0 (main.020715-1506), 50.50 KB (51,712 bytes), 7/29/2002 1:21 PM)

Copyright Dell

[Modem]

Item Value

[Network]

[Adapter]

Item Value
Name [00000001] Broadcom NetXtreme Gigabit Ethernet
Adapter Type Ethernet 802.3
Product Type Broadcom NetXtreme Gigabit Ethernet
Installed Yes
PNP Device ID PCI\VEN_14E4&DEV_1644&SUBSYS_01091028&REV_14\3&29E81982&0&10
Last Reset 5/19/2003 11:32 AM
Index 1
Service Name b57w2k
IP Address 0.0.0.0
IP Subnet 0.0.0.0
Default IP Gateway Not Available
DHCP Enabled No
DHCP Server Not Available
DHCP Lease Expires Not Available
DHCP Lease Obtained Not Available
MAC Address 00:06:5B:8F:F9:EC
Memory Address 0xEFF00000-0xEFF0FFFF
IRQ Channel IRQ 18
Driver c:\windows\system32\drivers\b57xp32.sys (2.67.0.0 built by: WinDDK, 131.63 KB (134,784 bytes), 9/25/2002 6:59 AM)

Name [00000002] Broadcom NetXtreme Gigabit Ethernet
Adapter Type Ethernet 802.3
Product Type Broadcom NetXtreme Gigabit Ethernet
Installed Yes
PNP Device ID PCI\VEN_14E4&DEV_1644&SUBSYS_01091028&REV_14\3&29E81982&0&08
Last Reset 5/19/2003 11:32 AM
Index 2
Service Name b57w2k
IP Address 0.0.0.0
IP Subnet 0.0.0.0
Default IP Gateway Not Available
DHCP Enabled No
DHCP Server Not Available
DHCP Lease Expires Not Available
DHCP Lease Obtained Not Available
MAC Address 00:06:5B:8F:F9:EB
Memory Address 0xEFF10000-0xEFF1FFFF
IRQ Channel IRQ 17
Driver c:\windows\system32\drivers\b57xp32.sys (2.67.0.0 built by: WinDDK, 131.63 KB (134,784 bytes), 9/25/2002 6:59 AM)

Name [00000003] RAS Async Adapter

Copyright Dell

Adapter Type Not Available
Product Type RAS Async Adapter
Installed Yes
PNP Device ID Not Available
Last Reset 5/19/2003 11:32 AM
Index 3
Service Name AsyncMac
IP Address Not Available
IP Subnet Not Available
Default IP Gateway Not Available
DHCP Enabled No
DHCP Server Not Available
DHCP Lease Expires Not Available
DHCP Lease Obtained Not Available
MAC Address Not Available

Name [00000004] WAN Miniport (L2TP)
Adapter Type Not Available
Product Type WAN Miniport (L2TP)
Installed Yes
PNP Device ID ROOT\MS_L2TPMINIPORT\0000
Last Reset 5/19/2003 11:32 AM
Index 4
Service Name Rasl2tp
IP Address Not Available
IP Subnet Not Available
Default IP Gateway Not Available
DHCP Enabled No
DHCP Server Not Available
DHCP Lease Expires Not Available
DHCP Lease Obtained Not Available
MAC Address Not Available
Driver c:\windows\system32\drivers\rasl2tp.sys (5.2.3663.0 (main.020715-1506), 61.63 KB (63,104 bytes), 7/29/2002 1:50 PM)

Name [00000005] WAN Miniport (PPTP)
Adapter Type Wide Area Network (WAN)
Product Type WAN Miniport (PPTP)
Installed Yes
PNP Device ID ROOT\MS_PPTPMINIPORT\0000
Last Reset 5/19/2003 11:32 AM
Index 5
Service Name PptpMiniport
IP Address Not Available
IP Subnet Not Available
Default IP Gateway Not Available
DHCP Enabled No
DHCP Server Not Available
DHCP Lease Expires Not Available
DHCP Lease Obtained Not Available
MAC Address 50:50:54:50:30:30
Driver c:\windows\system32\drivers\raspptp.sys (5.2.3663.0 (main.020715-1506), 56.00 KB (57,344 bytes), 7/29/2002 1:50 PM)

Name [00000006] WAN Miniport (PPPOE)

Copyright Dell

Adapter Type Wide Area Network (WAN)
Product Type WAN Miniport (PPPOE)
Installed Yes
PNP Device ID ROOT\MS_PPPOEMINIPORT\0000
Last Reset 5/19/2003 11:32 AM
Index 6
Service Name RasPppoe
IP Address Not Available
IP Subnet Not Available
Default IP Gateway Not Available
DHCP Enabled No
DHCP Server Not Available
DHCP Lease Expires Not Available
DHCP Lease Obtained Not Available
MAC Address 33:50:6F:45:30:30
Driver c:\windows\system32\drivers\raspppoe.sys (5.2.3663.0 (main.020715-1506), 36.88 KB (37,760 bytes), 7/29/2002 1:50 PM)

Name [00000007] Direct Parallel
Adapter Type Not Available
Product Type Direct Parallel
Installed Yes
PNP Device ID ROOT\MS_PTIMINIPORT\0000
Last Reset 5/19/2003 11:32 AM
Index 7
Service Name Raspti
IP Address Not Available
IP Subnet Not Available
Default IP Gateway Not Available
DHCP Enabled No
DHCP Server Not Available
DHCP Lease Expires Not Available
DHCP Lease Obtained Not Available
MAC Address Not Available
Driver c:\windows\system32\drivers\raspti.sys (5.2.3663.0 (main.020715-1506), 16.38 KB (16,768 bytes), 7/29/2002 1:50 PM)

Name [00000008] WAN Miniport (IP)
Adapter Type Not Available
Product Type WAN Miniport (IP)
Installed Yes
PNP Device ID ROOT\MS_NDISWANIP\0000
Last Reset 5/19/2003 11:32 AM
Index 8
Service Name NdisWan
IP Address Not Available
IP Subnet Not Available
Default IP Gateway Not Available
DHCP Enabled No
DHCP Server Not Available
DHCP Lease Expires Not Available
DHCP Lease Obtained Not Available
MAC Address Not Available
Driver c:\windows\system32\drivers\ndiswan.sys (5.2.3663.0 (main.020715-1506), 87.13 KB (89,216 bytes), 7/29/2002 1:33 PM)

Copyright Dell

[Protocol]

Item Value
Name MSAFD Tcpip [TCP/IP]
Connectionless Service No
Guarantees Delivery Yes
Guarantees Sequencing Yes
Maximum Address Size 16 bytes
Maximum Message Size 0 bytes
Message Oriented No
Minimum Address Size 16 bytes
Pseudo Stream Oriented No
Supports Broadcasting No
Supports Connect Data No
Supports Disconnect Data No
Supports Encryption No
Supports Expedited Data Yes
Supports Graceful Closing Yes
Supports Guaranteed Bandwidth No
Supports Multicasting No

Name MSAFD Tcpip [UDP/IP]
Connectionless Service Yes
Guarantees Delivery No
Guarantees Sequencing No
Maximum Address Size 16 bytes
Maximum Message Size 63.93 KB (65,467 bytes)
Message Oriented Yes
Minimum Address Size 16 bytes
Pseudo Stream Oriented No
Supports Broadcasting Yes
Supports Connect Data No
Supports Disconnect Data No
Supports Encryption No
Supports Expedited Data No
Supports Graceful Closing No
Supports Guaranteed Bandwidth No
Supports Multicasting Yes

Name RSVP UDP Service Provider
Connectionless Service Yes
Guarantees Delivery No
Guarantees Sequencing No
Maximum Address Size 16 bytes
Maximum Message Size 63.93 KB (65,467 bytes)
Message Oriented Yes
Minimum Address Size 16 bytes
Pseudo Stream Oriented No
Supports Broadcasting Yes
Supports Connect Data No
Supports Disconnect Data No
Supports Encryption Yes
Supports Expedited Data No
Supports Graceful Closing No

Copyright Dell

Supports Guaranteed Bandwidth No
Supports Multicasting Yes

Name RSVP TCP Service Provider
Connectionless Service No
Guarantees Delivery Yes
Guarantees SequencingYes
Maximum Address Size 16 bytes
Maximum Message Size 0 bytes
Message Oriented No
Minimum Address Size 16 bytes
Pseudo Stream Oriented No
Supports Broadcasting No
Supports Connect Data No
Supports Disconnect Data No
Supports Encryption Yes
Supports Expedited Data Yes
Supports Graceful Closing Yes
Supports Guaranteed Bandwidth No
Supports Multicasting No

Name MSAFD NetBIOS [\Device\NetBT_Tcpip_{963EF834-1E2A-4884-B8E3-B2226A7028B5}] SEQPACKET 0
Connectionless Service No
Guarantees Delivery Yes
Guarantees SequencingYes
Maximum Address Size 20 bytes
Maximum Message Size 62.50 KB (64,000 bytes)
Message Oriented Yes
Minimum Address Size 20 bytes
Pseudo Stream Oriented No
Supports Broadcasting No
Supports Connect Data No
Supports Disconnect Data No
Supports Encryption No
Supports Expedited Data No
Supports Graceful Closing No
Supports Guaranteed Bandwidth No
Supports Multicasting No

Name MSAFD NetBIOS [\Device\NetBT_Tcpip_{963EF834-1E2A-4884-B8E3-B2226A7028B5}] DATAGRAM 0
Connectionless Service Yes
Guarantees Delivery No
Guarantees SequencingNo
Maximum Address Size 20 bytes
Maximum Message Size 62.50 KB (64,000 bytes)
Message Oriented Yes
Minimum Address Size 20 bytes
Pseudo Stream Oriented No
Supports Broadcasting Yes
Supports Connect Data No
Supports Disconnect Data No
Supports Encryption No
Supports Expedited Data No

Copyright Dell

Supports Graceful Closing No
Supports Guaranteed Bandwidth No
Supports Multicasting No

Name MSAFD NetBIOS [\Device\NetBT_Tcpip_{33BDC1FB-8870-42DA-851E-7365EA4D529F}] SEQPACKET 1
Connectionless Service No
Guarantees Delivery Yes
Guarantees Sequencing Yes
Maximum Address Size 20 bytes
Maximum Message Size 62.50 KB (64,000 bytes)
Message Oriented Yes
Minimum Address Size 20 bytes
Pseudo Stream Oriented No
Supports Broadcasting No
Supports Connect Data No
Supports Disconnect Data No
Supports Encryption No
Supports Expedited Data No
Supports Graceful Closing No
Supports Guaranteed Bandwidth No
Supports Multicasting No

Name MSAFD NetBIOS [\Device\NetBT_Tcpip_{33BDC1FB-8870-42DA-851E-7365EA4D529F}] DATAGRAM 1
Connectionless Service Yes
Guarantees Delivery No
Guarantees Sequencing No
Maximum Address Size 20 bytes
Maximum Message Size 62.50 KB (64,000 bytes)
Message Oriented Yes
Minimum Address Size 20 bytes
Pseudo Stream Oriented No
Supports Broadcasting Yes
Supports Connect Data No
Supports Disconnect Data No
Supports Encryption No
Supports Expedited Data No
Supports Graceful Closing No
Supports Guaranteed Bandwidth No
Supports Multicasting No

Name MSAFD NetBIOS [\Device\NetBT_Tcpip_{ABF969CE-9BAB-42C9-8D9B-15A5DE0311BC}] SEQPACKET 2
Connectionless Service No
Guarantees Delivery Yes
Guarantees Sequencing Yes
Maximum Address Size 20 bytes
Maximum Message Size 62.50 KB (64,000 bytes)
Message Oriented Yes
Minimum Address Size 20 bytes
Pseudo Stream Oriented No
Supports Broadcasting No
Supports Connect Data No
Supports Disconnect Data No

Copyright Dell

Supports Encryption No
Supports Expedited Data No
Supports Graceful Closing No
Supports Guaranteed Bandwidth No
Supports Multicasting No

Name MSAFD NetBIOS [\Device\NetBT_Tcpip_{ABF969CE-9BAB-42C9-8D9B-15A5DE0311BC}] DATAGRAM 2
Connectionless Service Yes
Guarantees Delivery No
Guarantees SequencingNo
Maximum Address Size 20 bytes
Maximum Message Size 62.50 KB (64,000 bytes)
Message Oriented Yes
Minimum Address Size 20 bytes
Pseudo Stream Oriented No
Supports Broadcasting Yes
Supports Connect Data No
Supports Disconnect Data No
Supports Encryption No
Supports Expedited Data No
Supports Graceful Closing No
Supports Guaranteed Bandwidth No
Supports Multicasting No

Name MSAFD NetBIOS [\Device\NetBT_Tcpip_{5AD13563-F9A5-4E16-9343-D0F5532E3E7D}] SEQPACKET 3
Connectionless Service No
Guarantees Delivery Yes
Guarantees SequencingYes
Maximum Address Size 20 bytes
Maximum Message Size 62.50 KB (64,000 bytes)
Message Oriented Yes
Minimum Address Size 20 bytes
Pseudo Stream Oriented No
Supports Broadcasting No
Supports Connect Data No
Supports Disconnect Data No
Supports Encryption No
Supports Expedited Data No
Supports Graceful Closing No
Supports Guaranteed Bandwidth No
Supports Multicasting No

Name MSAFD NetBIOS [\Device\NetBT_Tcpip_{5AD13563-F9A5-4E16-9343-D0F5532E3E7D}] DATAGRAM 3
Connectionless Service Yes
Guarantees Delivery No
Guarantees SequencingNo
Maximum Address Size 20 bytes
Maximum Message Size 62.50 KB (64,000 bytes)
Message Oriented Yes
Minimum Address Size 20 bytes
Pseudo Stream Oriented No
Supports Broadcasting Yes

Copyright Dell

Supports Connect Data No
Supports Disconnect Data No
Supports Encryption No
Supports Expedited Data No
Supports Graceful Closing No
Supports Guaranteed Bandwidth No
Supports Multicasting No

[WinSock]

Item Value
File c:\windows\system32\winsock.dll
Size 2.80 KB (2,864 bytes)
Version 3.10

File c:\windows\system32\wsock32.dll
Size 22.00 KB (22,528 bytes)
Version 5.2.3663.0 (main.020715-1506)

[Ports]

[Serial]

Item Value
Name Communications Port (COM1)
Status OK
PNP Device ID ACPI\PNP0501\1
Maximum Input Buffer Size 0
Maximum Output Buffer Size No
Settable Baud Rate Yes
Settable Data Bits Yes
Settable Flow Control Yes
Settable Parity Yes
Settable Parity Check Yes
Settable Stop Bits Yes
Settable RLSD Yes
Supports RLSD Yes
Supports 16 Bit Mode No
Supports Special Characters No
Baud Rate 9600
Bits/Byte 8
Stop Bits 1
Parity None
Busy No
Abort Read/Write on Error No
Binary Mode Enabled Yes
Continue XMit on XOff No
CTS Outflow Control No
Discard NULL Bytes No
DSR Outflow Control 0
DSR Sensitivity 0
DTR Flow Control Type Enable
EOF Character 0

Copyright Dell

Error Replace Character 0
Error Replacement Enabled No
Event Character 0
Parity Check Enabled No
RTS Flow Control Type Enable
XOff Character 19
XOffXMit Threshold 512
XOn Character 17
XOnXMit Threshold 2048
XOnXOff InFlow Control 0
XOnXOff OutFlow Control 0
I/O Port 0x000003F8-0x000003FF
IRQ Channel IRQ 4
Driver c:\windows\system32\drivers\serial.sys (5.2.3663.0 (main.020715-1506), 61.63 KB (63,104 bytes), 7/29/2002 1:55 PM)

[Parallel]

Item Value

[Storage]

[Drives]

Item Value
Drive A:
Description 3 1/2 Inch Floppy Drive

Drive C:
Description Local Fixed Disk
Compressed No
File System NTFS
Size 16.95 GB (18,202,509,312 bytes)
Free Space 14.93 GB (16,027,783,168 bytes)
Volume Name Local Disk
Volume Serial Number FC445CAC

Drive E:
Description Local Fixed Disk
Compressed Not Available
File System Not Available
Size Not Available
Free Space Not Available
Volume Name Not Available
Volume Serial Number Not Available

Drive F:
Description Local Fixed Disk
Compressed Not Available
File System Not Available
Size Not Available
Free Space Not Available
Volume Name Not Available

Copyright Dell

Volume Serial Number Not Available

Drive G:
Description Local Fixed Disk
Compressed Not Available
File System Not Available
Size Not Available
Free Space Not Available
Volume Name Not Available
Volume Serial Number Not Available

Drive H:
Description Local Fixed Disk
Compressed Not Available
File System Not Available
Size Not Available
Free Space Not Available
Volume Name Not Available
Volume Serial Number Not Available

Drive I:
Description Local Fixed Disk
Compressed Not Available
File System Not Available
Size Not Available
Free Space Not Available
Volume Name Not Available
Volume Serial Number Not Available

Drive J:
Description Local Fixed Disk
Compressed Not Available
File System Not Available
Size Not Available
Free Space Not Available
Volume Name Not Available
Volume Serial Number Not Available

Drive K:
Description Local Fixed Disk
Compressed Not Available
File System Not Available
Size Not Available
Free Space Not Available
Volume Name Not Available
Volume Serial Number Not Available

Drive L:
Description Local Fixed Disk
Compressed Not Available
File System Not Available
Size Not Available
Free Space Not Available
Volume Name Not Available
Volume Serial Number Not Available

Copyright Dell

Drive M:
Description Local Fixed Disk
Compressed Not Available
File System Not Available
Size Not Available
Free Space Not Available
Volume Name Not Available
Volume Serial Number Not Available

Drive N:
Description Local Fixed Disk
Compressed Not Available
File System Not Available
Size Not Available
Free Space Not Available
Volume Name Not Available
Volume Serial Number Not Available

Drive P:
Description CD-ROM Disc

Drive S:
Description Local Fixed Disk
Compressed Not Available
File System Not Available
Size Not Available
Free Space Not Available
Volume Name Not Available
Volume Serial Number Not Available

Drive V:
Description Local Fixed Disk
Compressed No
File System NTFS
Size 400.00 GB (429,499,416,576 bytes)
Free Space 286.95 GB (308,111,671,296 bytes)
Volume Name EFV
Volume Serial Number 34C99F56

Drive W:
Description Local Fixed Disk
Compressed No
File System NTFS
Size 400.00 GB (429,499,416,576 bytes)
Free Space 286.95 GB (308,111,671,296 bytes)
Volume Name GHW
Volume Serial Number C4645255

Drive X:
Description Local Fixed Disk
Compressed No
File System NTFS
Size 400.00 GB (429,499,416,576 bytes)
Free Space 286.95 GB (308,111,736,832 bytes)

Copyright Dell

Volume Name IJX
Volume Serial Number C0B22E1A

Drive Y:
Description Local Fixed Disk
Compressed No
File System NTFS
Size 400.00 GB (429,499,416,576 bytes)
Free Space 286.95 GB (308,111,736,832 bytes)
Volume Name KLY
Volume Serial Number A47BBC52

Drive Z:
Description Local Fixed Disk
Compressed No
File System NTFS
Size 400.00 GB (429,499,416,576 bytes)
Free Space 286.95 GB (308,111,736,832 bytes)
Volume Name MNZ
Volume Serial Number 949A413C

[Disks]

Item Value
Description Disk drive
Manufacturer (Standard disk drives)
Model PERC LD 0 PERCRAID SCSI Disk Device
Bytes/Sector 512
Media Loaded Yes
Media Type Fixed hard disk
Partitions 3
SCSI Bus 4
SCSI Logical Unit 0
SCSI Port 7
SCSI Target ID 0
Sectors/Track 63
Size 944.89 GB (1,014,563,612,160 bytes)
Total Cylinders 123,347
Total Sectors 1,981,569,555
Total Tracks 31,453,485
Tracks/Cylinder 255
Partition Disk #5, Partition #0
Partition Size 164.00 GB (176,094,987,264 bytes)
Partition Starting Offset 32,256 bytes
Partition Disk #5, Partition #1
Partition Size 91.00 GB (97,708,101,120 bytes)
Partition Starting Offset 176,095,019,520 bytes
Partition Disk #5, Partition #2
Partition Size 400.00 GB (429,499,445,760 bytes)
Partition Starting Offset 273,803,120,640 bytes

Description Disk drive
Manufacturer (Standard disk drives)
Model PERC LD 0 PERCRAID SCSI Disk Device
Bytes/Sector 512

Copyright Dell

Media Loaded Yes
Media Type Fixed hard disk
Partitions 3
SCSI Bus 4
SCSI Logical Unit 0
SCSI Port 5
SCSI Target ID 0
Sectors/Track 63
Size 944.89 GB (1,014,563,612,160 bytes)
Total Cylinders 123,347
Total Sectors 1,981,569,555
Total Tracks 31,453,485
Tracks/Cylinder 255
Partition Disk #3, Partition #0
Partition Size 164.00 GB (176,094,987,264 bytes)
Partition Starting Offset 32,256 bytes
Partition Disk #3, Partition #1
Partition Size 91.00 GB (97,708,101,120 bytes)
Partition Starting Offset 176,095,019,520 bytes
Partition Disk #3, Partition #2
Partition Size 400.00 GB (429,499,445,760 bytes)
Partition Starting Offset 273,803,120,640 bytes

Description Disk drive
Manufacturer (Standard disk drives)
Model PERC LD 0 PERCRAID SCSI Disk Device
Bytes/Sector 512
Media Loaded Yes
Media Type Fixed hard disk
Partitions 1
SCSI Bus 4
SCSI Logical Unit 0
SCSI Port 2
SCSI Target ID 0
Sectors/Track 63
Size 270.92 GB (290,895,252,480 bytes)
Total Cylinders 35,366
Total Sectors 568,154,790
Total Tracks 9,018,330
Tracks/Cylinder 255
Partition Disk #0, Partition #0
Partition Size 250.00 GB (268,431,980,544 bytes)
Partition Starting Offset 32,256 bytes

Description Disk drive
Manufacturer (Standard disk drives)
Model PERC LD 0 PERCRAID SCSI Disk Device
Bytes/Sector 512
Media Loaded Yes
Media Type Fixed hard disk
Partitions 3
SCSI Bus 5
SCSI Logical Unit 0
SCSI Port 6
SCSI Target ID 0

Copyright Dell

Sectors/Track 63
Size 944.89 GB (1,014,563,612,160 bytes)
Total Cylinders 123,347
Total Sectors 1,981,569,555
Total Tracks 31,453,485
Tracks/Cylinder 255
Partition Disk #4, Partition #0
Partition Size 164.00 GB (176,094,987,264 bytes)
Partition Starting Offset 32,256 bytes
Partition Disk #4, Partition #1
Partition Size 91.00 GB (97,708,101,120 bytes)
Partition Starting Offset 176,095,019,520 bytes
Partition Disk #4, Partition #2
Partition Size 400.00 GB (429,499,445,760 bytes)
Partition Starting Offset 273,803,120,640 bytes

Description Disk drive
Manufacturer (Standard disk drives)
Model PERC LD 0 PERCRAID SCSI Disk Device
Bytes/Sector 512
Media Loaded Yes
Media Type Fixed hard disk
Partitions 3
SCSI Bus 4
SCSI Logical Unit 0
SCSI Port 4
SCSI Target ID 0
Sectors/Track 63
Size 944.89 GB (1,014,563,612,160 bytes)
Total Cylinders 123,347
Total Sectors 1,981,569,555
Total Tracks 31,453,485
Tracks/Cylinder 255
Partition Disk #2, Partition #0
Partition Size 164.00 GB (176,094,987,264 bytes)
Partition Starting Offset 32,256 bytes
Partition Disk #2, Partition #1
Partition Size 91.00 GB (97,708,101,120 bytes)
Partition Starting Offset 176,095,019,520 bytes
Partition Disk #2, Partition #2
Partition Size 400.00 GB (429,499,445,760 bytes)
Partition Starting Offset 273,803,120,640 bytes

Description Disk drive
Manufacturer (Standard disk drives)
Model PERC LD 0 PERCRAID SCSI Disk Device
Bytes/Sector 512
Media Loaded Yes
Media Type Fixed hard disk
Partitions 3
SCSI Bus 4
SCSI Logical Unit 0
SCSI Port 3
SCSI Target ID 0
Sectors/Track 63

Copyright Dell

Size 944.89 GB (1,014,563,612,160 bytes)
Total Cylinders 123,347
Total Sectors 1,981,569,555
Total Tracks 31,453,485
Tracks/Cylinder 255
Partition Disk #1, Partition #0
Partition Size 164.00 GB (176,094,987,264 bytes)
Partition Starting Offset 32,256 bytes
Partition Disk #1, Partition #1
Partition Size 91.00 GB (97,708,101,120 bytes)
Partition Starting Offset 176,095,019,520 bytes
Partition Disk #1, Partition #2
Partition Size 400.00 GB (429,499,445,760 bytes)
Partition Starting Offset 273,803,120,640 bytes

Description Disk drive
Manufacturer (Standard disk drives)
Model SEAGATE ST318305LC SCSI Disk Device
Bytes/Sector 512
Media Loaded Yes
Media Type Fixed hard disk
Partitions 1
SCSI Bus 0
SCSI Logical Unit 0
SCSI Port 8
SCSI Target ID 0
Sectors/Track 63
Size 16.95 GB (18,202,544,640 bytes)
Total Cylinders 2,213
Total Sectors 35,551,845
Total Tracks 564,315
Tracks/Cylinder 255
Partition Disk #6, Partition #0
Partition Size 16.95 GB (18,202,512,384 bytes)
Partition Starting Offset 32,256 bytes

[SCSI]

Item Value
Name Adaptec AIC-7892 Ultra160 PCI SCSI Card
Manufacturer Adaptec
Status OK
PNP Device ID PCI\VEN_9005&DEV_008F&SUBSYS_01091028&REV_02\3&13C0B0C5&0&18
I/O Port 0x0000EC00-0x0000ECFF
Memory Address 0xFE101000-0xFE101FFF
IRQ Channel IRQ 16
Driver c:\windows\system32\drivers\adpu160m.sys (RTC_XP07 (lab01_n(storbuild).010917-1031), 99.63 KB (102,016 bytes), 10/10/2002 4:52 AM)

Name DELL PERC 3/QC Plus RAID Controller
Manufacturer DELL
Status OK
PNP Device ID PCI\VEN_101E&DEV_1960&SUBSYS_05031028&REV_01\3&1070020&0&08
Memory Address 0xF8000000-0xF9FFFFFF
IRQ Channel IRQ 21

Copyright Dell

Driver c:\windows\system32\drivers\mraid35x.sys (5.2.22.4 built by: WinDDK, 17.88 KB (18,304 bytes), 1/9/2003 11:58 AM)

Name DELL PERC 3/QC Plus RAID Controller
Manufacturer DELL
Status OK
PNP Device ID PCI\VEN_101E&DEV_1960&SUBSYS_05031028&REV_01\3&1070020&0&10
Memory Address 0xF0000000-0xFCFFFFFF
IRQ Channel IRQ 22
Driver c:\windows\system32\drivers\mraid35x.sys (5.2.22.4 built by: WinDDK, 17.88 KB (18,304 bytes), 1/9/2003 11:58 AM)

Name DELL PERC 3/QC Plus RAID Controller
Manufacturer DELL
Status OK
PNP Device ID PCI\VEN_101E&DEV_1960&SUBSYS_05031028&REV_01\3&172E68DD&0&08
Memory Address 0xE8000000-0xEBFFFFFF
IRQ Channel IRQ 25
Driver c:\windows\system32\drivers\mraid35x.sys (5.2.22.4 built by: WinDDK, 17.88 KB (18,304 bytes), 1/9/2003 11:58 AM)

Name DELL PERC 3/QC Plus RAID Controller
Manufacturer DELL
Status OK
PNP Device ID PCI\VEN_101E&DEV_1960&SUBSYS_05031028&REV_01\3&172E68DD&0&10
Memory Address 0xE0000000-0xEFDFFFFF
IRQ Channel IRQ 26
Driver c:\windows\system32\drivers\mraid35x.sys (5.2.22.4 built by: WinDDK, 17.88 KB (18,304 bytes), 1/9/2003 11:58 AM)

Name DELL PERC 3/QC Plus RAID Controller
Manufacturer DELL
Status OK
PNP Device ID PCI\VEN_101E&DEV_1960&SUBSYS_05031028&REV_01\3&474B838&0&08
Memory Address 0xD8000000-0xDBFFFFFF
IRQ Channel IRQ 23
Driver c:\windows\system32\drivers\mraid35x.sys (5.2.22.4 built by: WinDDK, 17.88 KB (18,304 bytes), 1/9/2003 11:58 AM)

Name DELL PERC 3/QC Plus RAID Controller
Manufacturer DELL
Status OK
PNP Device ID PCI\VEN_101E&DEV_1960&SUBSYS_05031028&REV_01\3&474B838&0&10
Memory Address 0xD4000000-0xDFFFFFFF
IRQ Channel IRQ 24
Driver c:\windows\system32\drivers\mraid35x.sys (5.2.22.4 built by: WinDDK, 17.88 KB (18,304 bytes), 1/9/2003 11:58 AM)

Name QLogic QLA23xx PCI Fibre Channel Adapter
Manufacturer QLogic
Status OK
PNP Device ID PCI\VEN_1077&DEV_2312&SUBSYS_01001077&REV_02\3&20FEA912&0&08
I/O Port 0x0000AC00-0x0000ACFF
Memory Address 0xD2A00000-0xD2A00FFF
IRQ Channel IRQ 27

Copyright Dell

Driver c:\windows\system32\drivers\ql2300.sys (8.2.2.10 Beta 1A (W2K VI), 435.39 KB (445,836 bytes), 4/23/2003 12:01 PM)

[IDE]

Item Value
Name Standard Dual Channel PCI IDE Controller
Manufacturer (Standard IDE ATA/ATAPI controllers)
Status OK
PNP Device ID PCI\VEN_1166&DEV_0212&SUBSYS_02121166&REV_93\3&13C0B0C5&0&79
I/O Port 0x000008B0-0x000008BF
Driver c:\windows\system32\drivers\pciide.sys (5.2.3663.0 (main.020715-1506), 3.50 KB (3,584 bytes), 7/29/2002 1:49 PM)

Name Primary IDE Channel
Manufacturer (Standard IDE ATA/ATAPI controllers)
Status OK
PNP Device ID PCIIDE\IDECHANNEL\4&10A8249&0&0
I/O Port 0x000001F0-0x000001F7
I/O Port 0x000003F6-0x000003F6
IRQ Channel IRQ 14
Driver c:\windows\system32\drivers\atapi.sys (5.2.3663.0 (main.020715-1506), 90.38 KB (92,544 bytes), 7/29/2002 1:09 PM)

Name Secondary IDE Channel
Manufacturer (Standard IDE ATA/ATAPI controllers)
Status Error
PNP Device ID PCIIDE\IDECHANNEL\4&10A8249&0&1
I/O Port 0x00000170-0x00000177
I/O Port 0x00000376-0x00000376
IRQ Channel IRQ 15
Driver c:\windows\system32\drivers\atapi.sys (5.2.3663.0 (main.020715-1506), 90.38 KB (92,544 bytes), 7/29/2002 1:09 PM)

[Printing]

Name Driver Port Name Server Name

[Problem Devices]

Device PNP Device ID Error Code
Secondary IDE Channel PCIIDE\IDECHANNEL\4&10A8249&0&1 This device cannot find enough free resources that it can use.

[USB]

Device PNP Device ID

[Software Environment]

[System Drivers]

Copyright Dell

Appendix C – Tunable Parameters

Name Description File Type Started Start Mode State Status Error Control
Accept Pause Accept Stop
abiosdsk Abiosdsk Not Available Kernel Driver No Disabled
Stopped OK Ignore No No
acpi Microsoft ACPI Driver c:\windows\system32\drivers\acpi.sys Kernel Driver Yes
Boot Running OK Normal No Yes
acpiec ACPIEC c:\windows\system32\drivers\acpiec.sys Kernel Driver No
Disabled Stopped OK Normal No No
adpu160m adpu160m c:\windows\system32\drivers\adpu160m.sys Kernel Driver
Yes Boot Running OK Normal No Yes
adpu320 adpu320 Not Available Kernel Driver No Disabled
Stopped OK Normal No No
afcnt afcnt Not Available Kernel Driver No Disabled Stopped OK
Normal No No
afd AFD Networking Support Environment c:\windows\system32\drivers\afd.sys Kernel
Driver Yes Auto Running OK Normal No Yes
aha154x Aha154x Not Available Kernel Driver No Disabled
Stopped OK Normal No No
aic78u2 aic78u2 Not Available Kernel Driver No Disabled Stopped OK
Normal No No
aic78xx aic78xx Not Available Kernel Driver No Disabled Stopped OK
Normal No No
aliide AliIde Not Available Kernel Driver No Disabled Stopped OK
Normal No No
asyncmac RAS Asynchronous Media Driver
c:\windows\system32\drivers\asyncmac.sys Kernel Driver No Manual
Stopped OK Normal No No
atapi Standard IDE/ESDI Hard Disk Controller c:\windows\system32\drivers\atapi.sys Kernel
Driver Yes Boot Running OK Normal No Yes
atdisk Atdisk Not Available Kernel Driver No Disabled Stopped OK
Ignore No No
ati2mpad ati2mpad c:\windows\system32\drivers\ati2mpad.sys Kernel Driver
Yes Manual Running OK Ignore No Yes
atmarpc ATM ARP Client Protocol c:\windows\system32\drivers\atmarpc.sys
Kernel Driver No Manual Stopped OK Normal No No
audstub Audio Stub Driver c:\windows\system32\drivers\audstub.sys Kernel Driver
Yes Manual Running OK Normal No Yes
b57w2k Broadcom NetXtreme Gigabit Ethernet c:\windows\system32\drivers\b57xp32.sys
Kernel Driver Yes Manual Running OK Normal No Yes
beep Beep c:\windows\system32\drivers\beep.sys Kernel Driver Yes System
Running OK Normal No Yes
cbidf2k cbidf2k c:\windows\system32\drivers\cbidf2k.sys Kernel Driver No Disabled
Stopped OK Normal No No
cd20xrnt cd20xrnt Not Available Kernel Driver No Disabled
Stopped OK Normal No No
cdfs Cdfs c:\windows\system32\drivers\cdfs.sys File System Driver Yes
Disabled Running OK Normal No Yes
cdrom CD-ROM Driver c:\windows\system32\drivers\cdrom.sys Kernel Driver Yes System
Running OK Normal No Yes
changer Changer Not Available Kernel Driver No System Stopped
OK Ignore No No
clusdisk Cluster Disk Driver c:\windows\system32\drivers\clusdisk.sys Kernel Driver
No Disabled Stopped OK Normal No No
cmdide CmdIde Not Available Kernel Driver No Disabled Stopped OK
Normal No No

Copyright Dell

cpqarray Cpqarray Not Available Kernel Driver No Disabled
Stopped OK Normal No No
cpqarry2 cpqarry2 Not Available Kernel Driver No Disabled
Stopped OK Normal No No
cpqcissm cpqcissm Not Available Kernel Driver No Disabled
Stopped OK Normal No No
cpqfcalm cpqfcalm Not Available Kernel Driver No Disabled
Stopped OK Normal No No
crcdisk CRC Disk Filter Driver c:\windows\system32\drivers\crcdisk.sys Kernel Driver Yes
Boot Running OK Normal No Yes
dac2w2k dac2w2k c:\windows\system32\drivers\dac2w2k.sys Kernel Driver
Yes Boot Running OK Normal No Yes
dac960nt dac960nt Not Available Kernel Driver No Disabled
Stopped OK Normal No No
dfsdriver DfsDriver c:\windows\system32\drivers\dfs.sys File System Driver
Yes Boot Running OK Normal No Yes
disk Disk Driver c:\windows\system32\drivers\disk.sys Kernel Driver Yes Boot
Running OK Normal No Yes
dmboot dmboot c:\windows\system32\drivers\dmboot.sys Kernel Driver No
Disabled Stopped OK Normal No No
dmio Logical Disk Manager Driver c:\windows\system32\drivers\dmio.sys Kernel Driver
Yes Boot Running OK Normal No Yes
dmload dmload c:\windows\system32\drivers\dmload.sys Kernel Driver Yes Boot
Running OK Normal No Yes
dpti2o dpti2o Not Available Kernel Driver No Disabled Stopped OK
Normal No No
em em \??\c:\windows\system32\drivers\em.sys Kernel Driver No Manual
Stopped OK Normal No No
fastfat Fastfat c:\windows\system32\drivers\fastfat.sys File System Driver Yes
Disabled Running OK Normal No Yes
fdc Floppy Disk Controller Driver c:\windows\system32\drivers\fdc.sys Kernel Driver
Yes Manual Running OK Normal No Yes
fips Fips c:\windows\system32\drivers\fips.sys Kernel Driver Yes System
Running OK Normal No Yes
flpydisk Floppy Disk Driver c:\windows\system32\drivers\flpydisk.sys Kernel Driver
Yes Manual Running OK Normal No Yes
ftdisk Volume Manager Driver c:\windows\system32\drivers\ftdisk.sys Kernel Driver Yes
Boot Running OK Normal No Yes
gpc Generic Packet Classifier c:\windows\system32\drivers\msgpc.sys Kernel Driver
Yes Manual Running OK Normal No Yes
hpn hpn Not Available Kernel Driver No Disabled Stopped OK
Normal No No
hpt3xx hpt3xx Not Available Kernel Driver No Disabled Stopped OK
Normal No No
http HTTP c:\windows\system32\drivers\http.sys Kernel Driver No Manual
Stopped OK Normal No No
i2omgmt i2omgmt Not Available Kernel Driver No System Stopped
OK Normal No No
i2omp i2omp Not Available Kernel Driver No Disabled Stopped OK
Normal No No
i8042prt i8042 Keyboard and PS/2 Mouse Port Driver
c:\windows\system32\drivers\i8042prt.sys Kernel Driver Yes System
Running OK Normal No Yes
imapi CD-Burning Filter Driver c:\windows\system32\drivers\imapi.sys Kernel Driver No
System Stopped OK Normal No No

Copyright Dell

intelide IntelIde Not Available Kernel Driver No Disabled Stopped OK
Normal No No
ipfilterdriver IP Traffic Filter Driver c:\windows\system32\drivers\ipfltdrv.sys Kernel Driver
No Manual Stopped OK Normal No No
ipinip IP in IP Tunnel Driver c:\windows\system32\drivers\ipinip.sys Kernel Driver No
Manual Stopped OK Normal No No
ipnat IP Network Address Translator c:\windows\system32\drivers\ipnat.sys Kernel Driver
No Manual Stopped OK Normal No No
ipsec IPSEC driver c:\windows\system32\drivers\ipsec.sys Kernel Driver Yes System
Running OK Normal No Yes
ipsraidn ipsraidn Not Available Kernel Driver No Disabled Stopped OK
Normal No No
isapnp PnP ISA/EISA Bus Driver c:\windows\system32\drivers\isapnp.sys Kernel Driver
Yes Boot Running OK Critical No Yes
kbdclass Keyboard Class Driver c:\windows\system32\drivers\kbdclass.sys Kernel
Driver Yes System Running OK Normal No Yes
ksecdd KSecDD c:\windows\system32\drivers\ksecdd.sys Kernel Driver Yes Boot
Running OK Normal No Yes
lp6nds35 lp6nds35 Not Available Kernel Driver No Disabled
Stopped OK Normal No No
macxp32 macxp32 c:\windows\system32\drivers\macxp32.sys Kernel Driver
Yes Boot Running OK Normal No Yes
mnmdd mnmdd c:\windows\system32\drivers\mnmdd.sys Kernel Driver Yes System
Running OK Ignore No Yes
modem Modem c:\windows\system32\drivers\modem.sys Kernel Driver No Manual
Stopped OK Ignore No No
mouclass Mouse Class Driver c:\windows\system32\drivers\mouclass.sys Kernel
Driver Yes System Running OK Normal No Yes
mountmgr Mount Point Manager c:\windows\system32\drivers\mountmgr.sys Kernel
Driver Yes Boot Running OK Normal No Yes
mraid2k mraid2k c:\windows\system32\drivers\mraid2k.sys Kernel Driver No Boot
Stopped OK Normal No No
mraid35x mraid35x c:\windows\system32\drivers\mraid35x.sys Kernel Driver
Yes Boot Running OK Normal No Yes
mrxdav WebDav Client Redirector c:\windows\system32\drivers\mrxdav.sys File
System Driver No Manual Stopped OK Normal No No
mrxsmb MRXSMB c:\windows\system32\drivers\mrxsmb.sys File System Driver
Yes System Running OK Normal No Yes
msfs Msfs c:\windows\system32\drivers\msfs.sys File System Driver Yes System
Running OK Normal No Yes
mup Mup c:\windows\system32\drivers\mup.sys File System Driver Yes Boot
Running OK Normal No Yes
ndis NDIS System Driver c:\windows\system32\drivers\ndis.sys Kernel Driver Yes
Boot Running OK Normal No Yes
ndistapi Remote Access NDIS TAPI Driver c:\windows\system32\drivers\ndistapi.sys
Kernel Driver Yes Manual Running OK Normal No Yes
ndisuio NDIS Usermode I/O Protocol c:\windows\system32\drivers\ndisuio.sys Kernel Driver
No Manual Stopped OK Normal No No
ndiswan Remote Access NDIS WAN Driver
c:\windows\system32\drivers\ndiswan.sys Kernel Driver Yes Manual
Running OK Normal No Yes
ndproxy NDIS Proxy c:\windows\system32\drivers\ndproxy.sys Kernel Driver Yes
Manual Running OK Normal No Yes
netbios NetBIOS Interface c:\windows\system32\drivers\netbios.sys File System
Driver Yes System Running OK Normal No Yes

Copyright Dell

netbt NetBios over Tcpip c:\windows\system32\drivers\netbt.sys Kernel Driver Yes
System Running OK Normal No Yes
nfrd960 nfrd960 Not Available Kernel Driver No Disabled Stopped OK
Normal No No
npfs Npfs c:\windows\system32\drivers\npfs.sys File System Driver Yes System
Running OK Normal No Yes
ntfs Ntfs c:\windows\system32\drivers\ntfs.sys File System Driver Yes
Disabled Running OK Normal No Yes
null Null c:\windows\system32\drivers\null.sys Kernel Driver Yes System
Running OK Normal No Yes
parport Parport c:\windows\system32\drivers\parport.sys Kernel Driver No Manual
Stopped OK Ignore No No
partmgr Partition Manager c:\windows\system32\drivers\partmgr.sys Kernel Driver
Yes Boot Running OK Normal No Yes
parvdm ParVdm c:\windows\system32\drivers\parvdm.sys Kernel Driver No
Auto Stopped OK Ignore No No
pci PCI Bus Driver c:\windows\system32\drivers\pci.sys Kernel Driver Yes Boot
Running OK Critical No Yes
pciide PCIIde c:\windows\system32\drivers\pciide.sys Kernel Driver Yes Boot
Running OK Normal No Yes
pcmcia Pcmcia c:\windows\system32\drivers\pcmcia.sys Kernel Driver No Disabled
Stopped OK Normal No No
pdcomp PDCOMP Not Available Kernel Driver No Manual Stopped OK
Ignore No No
pdframe PDFRAME Not Available Kernel Driver No Manual Stopped
OK Ignore No No
pdreli PDRELI Not Available Kernel Driver No Manual Stopped OK
Ignore No No
pdrframe PDRFRAME Not Available Kernel Driver No Manual Stopped
OK Ignore No No
perc2 perc2 Not Available Kernel Driver No Disabled Stopped OK
Normal No No
perc2hib perc2hib Not Available Kernel Driver No Disabled
Stopped OK Normal No No
pptpminiport WAN Miniport (PPTP) c:\windows\system32\drivers\raspptp.sys Kernel
Driver Yes Manual Running OK Normal No Yes
processor Processor Driver c:\windows\system32\drivers\processr.sys Kernel
Driver Yes Manual Running OK Normal No Yes
ptilink Direct Parallel Link Driver c:\windows\system32\drivers\ptilink.sys Kernel Driver
Yes Manual Running OK Normal No Yes
ql1080 ql1080 Not Available Kernel Driver No Disabled Stopped OK
Normal No No
ql10wnt Ql10wnt Not Available Kernel Driver No Disabled Stopped
OK Normal No No
ql12160 ql12160 Not Available Kernel Driver No Disabled Stopped OK
Normal No No
ql1240 ql1240 Not Available Kernel Driver No Disabled Stopped OK
Normal No No
ql1280 ql1280 Not Available Kernel Driver No Disabled Stopped OK
Normal No No
ql2100 ql2100 Not Available Kernel Driver No Disabled Stopped OK
Normal No No
ql2200 ql2200 Not Available Kernel Driver No Disabled Stopped OK
Normal No No

Copyright Dell

ql2300 ql2300 c:\windows\system32\drivers\ql2300.sys Kernel Driver Yes Boot
Running OK Normal No Yes
qlvika qlvika c:\windows\system32\drivers\qlvika.sys Kernel Driver Yes Auto
Running OK Normal No Yes
rasacd Remote Access Auto Connection Driver c:\windows\system32\drivers\rasacd.sys Kernel
Driver Yes System Running OK Normal No Yes
rasl2tp WAN Miniport (L2TP) c:\windows\system32\drivers\rasl2tp.sys Kernel Driver Yes
Manual Running OK Normal No Yes
raspppoe Remote Access PPPOE Driver c:\windows\system32\drivers\raspppoe.sys
Kernel Driver Yes Manual Running OK Normal No Yes
raspti Direct Parallel c:\windows\system32\drivers\raspti.sys Kernel Driver Yes Manual
Running OK Normal No Yes
rdbss Rdbss c:\windows\system32\drivers\rdbss.sys File System Driver Yes System
Running OK Normal No Yes
rdpcdd RDPCDD c:\windows\system32\drivers\rdpcdd.sys Kernel Driver Yes System
Running OK Ignore No Yes
rdpdr Terminal Server Device Redirector Driver c:\windows\system32\drivers\rdpdr.sys
Kernel Driver Yes Manual Running OK Normal No Yes
rdpwd RDPWD c:\windows\system32\drivers\rdpwd.sys Kernel Driver No Manual
Stopped OK Ignore No No
redbook Digital CD Audio Playback Filter Driver
c:\windows\system32\drivers\redbook.sys Kernel Driver Yes System
Running OK Normal No Yes
secdrv Secdrv c:\windows\system32\drivers\secdrv.sys Kernel Driver No Manual
Stopped OK Normal No No
serenum Serenum Filter Driver c:\windows\system32\drivers\serenum.sys Kernel
Driver Yes Manual Running OK Normal No Yes
serial Serial port driver c:\windows\system32\drivers\serial.sys Kernel Driver Yes
System Running OK Ignore No Yes
sfloppy Sfloppy c:\windows\system32\drivers\sfloppy.sys Kernel Driver No System
Stopped OK Ignore No No
simbad Simbad Not Available Kernel Driver No Disabled Stopped OK
Normal No No
sparrow Sparrow Not Available Kernel Driver No Disabled Stopped
OK Normal No No
srv Srv c:\windows\system32\drivers\srv.sys File System Driver Yes Manual
Running OK Normal No Yes
swenum Software Bus Driver c:\windows\system32\drivers\swenum.sys Kernel
Driver Yes Manual Running OK Normal No Yes
symc810 symc810 Not Available Kernel Driver No Disabled
Stopped OK Normal No No
symc8xx symc8xx Not Available Kernel Driver No Disabled
Stopped OK Normal No No
symmpi symmpi Not Available Kernel Driver No Disabled Stopped OK
Normal No No
sym_hi sym_hi Not Available Kernel Driver No Disabled Stopped OK
Normal No No
sym_u3 sym_u3 Not Available Kernel Driver No Disabled Stopped OK
Normal No No
tcpip TCP/IP Protocol Driver c:\windows\system32\drivers\tcpip.sys Kernel Driver Yes
System Running OK Normal No Yes
tdpipe TDPIPE c:\windows\system32\drivers\tdpipe.sys Kernel Driver No Manual
Stopped OK Ignore No No
tdtcp TDTCP c:\windows\system32\drivers\tdtcp.sys Kernel Driver No Manual
Stopped OK Ignore No No

Copyright Dell

termdd Terminal Device Driver c:\windows\system32\drivers\termdd.sys Kernel Driver Yes
System Running OK Normal No Yes
toside TosIde Not Available Kernel Driver No Disabled Stopped OK
Normal No No
udfs Udfs c:\windows\system32\drivers\udfs.sys File System Driver No
Disabled Stopped OK Normal No No
ultra ultra Not Available Kernel Driver No Disabled Stopped OK
Normal No No
update Microcode Update Driver c:\windows\system32\drivers\update.sys Kernel Driver
Yes Manual Running OK Normal No Yes
usbhub USB2 Enabled Hub c:\windows\system32\drivers\usbhub.sys Kernel Driver
No Manual Stopped OK Normal No No
usbohci Microsoft USB Open Host Controller Miniport Driver
c:\windows\system32\drivers\usbohci.sys Kernel Driver No Manual
Stopped OK Normal No No
vgasave VGA Display Controller. c:\windows\system32\drivers\vga.sys Kernel Driver
Yes System Running OK Ignore No Yes
viaide ViaIde Not Available Kernel Driver No Disabled Stopped OK
Normal No No
volsnap VolSnap c:\windows\system32\drivers\volsnap.sys Kernel Driver Yes
Boot Running OK Normal No Yes
wanarp Remote Access IP ARP Driver c:\windows\system32\drivers\wanarp.sys Kernel
Driver Yes Manual Running OK Normal No Yes
wdica WDICA Not Available Kernel Driver No Manual Stopped OK Ignore
No No
wlbs Network Load Balancing c:\windows\system32\drivers\wlbs.sys Kernel Driver
No Manual Stopped OK Normal No No

[Signed Drivers]

Device Name Signed Device Class Driver Version Driver Date Manufacturer INF
Name Driver Name Device ID
Not Available Not Available Not Available Not Available Not Available Not Available
Not Available Not Available HTREE\ROOT\0
ACPI Multiprocessor PCNo COMPUTER 5.2.3663.0 7/15/2002 (Standard
computers) hal.inf Not Available ROOT\ACPI_HAL\0000
Microsoft ACPI-Compliant System No SYSTEM 5.2.3663.0 7/15/2002
Microsoft acpi.inf Not Available ACPI_HAL\PNP0C08\0
Processor No PROCESSOR 5.2.3663.0 7/15/2002 (Standard processor
types) cpu.inf Not Available ACPI\GENUINEINTEL_-_X86_FAMILY_15_MODEL_2_0
Processor No PROCESSOR 5.2.3663.0 7/15/2002 (Standard processor
types) cpu.inf Not Available ACPI\GENUINEINTEL_-_X86_FAMILY_15_MODEL_2_1
Processor No PROCESSOR 5.2.3663.0 7/15/2002 (Standard processor
types) cpu.inf Not Available ACPI\GENUINEINTEL_-_X86_FAMILY_15_MODEL_2_2
Processor No PROCESSOR 5.2.3663.0 7/15/2002 (Standard processor
types) cpu.inf Not Available ACPI\GENUINEINTEL_-_X86_FAMILY_15_MODEL_2_3
Processor No PROCESSOR 5.2.3663.0 7/15/2002 (Standard processor
types) cpu.inf Not Available ACPI\GENUINEINTEL_-_X86_FAMILY_15_MODEL_2_4
Processor No PROCESSOR 5.2.3663.0 7/15/2002 (Standard processor
types) cpu.inf Not Available ACPI\GENUINEINTEL_-_X86_FAMILY_15_MODEL_2_5
Processor No PROCESSOR 5.2.3663.0 7/15/2002 (Standard processor
types) cpu.inf Not Available ACPI\GENUINEINTEL_-_X86_FAMILY_15_MODEL_2_6
Processor No PROCESSOR 5.2.3663.0 7/15/2002 (Standard processor
types) cpu.inf Not Available ACPI\GENUINEINTEL_-_X86_FAMILY_15_MODEL_2_7

Copyright Dell

PCI busNo SYSTEM 5.2.3663.0 7/15/2002 (Standard system devices)
machine.inf Not Available ACPI\PNP0A03\1
ServerWorks Grand Champion - NorthBridge High End No SYSTEM 5.2.3663.0
7/15/2002 ServerWorks (RCC) machine.inf Not Available
PCI\VEN_1166&DEV_0011&SUBSYS_00000000&REV_22\3&13C0B0C5&0&00
ServerWorks Grand Champion - NorthBridge High End No SYSTEM 5.2.3663.0
7/15/2002 ServerWorks (RCC) machine.inf Not Available
PCI\VEN_1166&DEV_0011&SUBSYS_00000000&REV_00\3&13C0B0C5&0&01
ServerWorks Grand Champion - NorthBridge High End No SYSTEM 5.2.3663.0
7/15/2002 ServerWorks (RCC) machine.inf Not Available
PCI\VEN_1166&DEV_0011&SUBSYS_00000000&REV_00\3&13C0B0C5&0&02
ServerWorks Grand Champion - NorthBridge High End No SYSTEM 5.2.3663.0
7/15/2002 ServerWorks (RCC) machine.inf Not Available
PCI\VEN_1166&DEV_0011&SUBSYS_00000000&REV_00\3&13C0B0C5&0&03
Adaptec AIC-7892 Ultra160 PCI SCSI Card No SCSIADAPTER 5.2.3663.0
7/15/2002 Adaptec pnpscsi.inf Not Available
PCI\VEN_9005&DEV_008F&SUBSYS_01091028&REV_02\3&13C0B0C5&0&18
Disk drive No DISKDRIVE 5.2.3663.0 7/15/2002 (Standard disk drives)
disk.inf Not Available
SCSI\DISK&VEN_SEAGATE&PROD_ST318305LC&REV_2203\4&39BE13D2&0&000
PE 1x8 Backplane No SYSTEM 5.2.3663.0 7/15/2002 Dell
scsidev.inf Not Available
SCSI\PROCESSOR&VEN_PE/PV&PROD_1X8_SCSI_BP&REV_1.0\4&39BE13D2&0&0
60
RAGE XL PCI (Microsoft Corporation) No DISPLAY 5.10.2600.6009 7/2/2001
ATI Technologies Inc. atiixpad.inf Not Available
PCI\VEN_1002&DEV_4752&SUBSYS_01091028&REV_27\3&13C0B0C5&0&20
Dell 1726T-HS/D1025HT No MONITOR 5.1.2001.0 6/6/2001 Dell
Computer Corp. monitor.inf Not Available
DISPLAY\DEL5319\4&C321929&0&80000001&00&04
PCI standard host CPU bridge No SYSTEM 5.2.3663.0 7/15/2002
(Standard system devices) machine.inf Not Available
PCI\VEN_1166&DEV_0201&SUBSYS_00000000&REV_93\3&13C0B0C5&0&78
Direct memory access controller No SYSTEM 5.2.3663.0 7/15/2002
(Standard system devices) machine.inf Not Available
ACPI\PNP0200\4&25F73A82&0
Numeric data processor No SYSTEM 5.2.3663.0 7/15/2002 (Standard
system devices)machine.inf Not Available ACPI\PNP0C04\4&25F73A82&0
Programmable interrupt controller No SYSTEM 5.2.3663.0 7/15/2002
(Standard system devices) machine.inf Not Available
ACPI\PNP0000\4&25F73A82&0
System speakerNo SYSTEM 5.2.3663.0 7/15/2002 (Standard system
devices) machine.inf Not Available ACPI\PNP0800\4&25F73A82&0
System timer No SYSTEM 5.2.3663.0 7/15/2002 (Standard system
devices) machine.inf Not Available ACPI\PNP0100\4&25F73A82&0
Standard floppy disk controller No FDC 5.2.3663.0 7/15/2002 (Standard
floppy disk controllers) fdc.inf Not Available ACPI\PNP0700\4&25F73A82&0
Floppy disk drive No FLOPPYDISK 5.2.3663.0 7/15/2002 (Standard
floppy disk drives) flpydisk.inf Not Available
FDC\GENERIC_FLOPPY_DRIVE\5&1AE2F47D&0&0
Standard 101/102-Key or Microsoft Natural PS/2 Keyboard No KEYBOARD
5.2.3663.0 7/15/2002 (Standard keyboards) keyboard.inf Not Available
ACPI\PNP0303\4&25F73A82&0
PS/2 Compatible MouseNo MOUSE 5.2.3663.0 7/15/2002 Microsoft
msmouse.inf Not Available ACPI\PNP0F13\4&25F73A82&0

Copyright Dell

Communications Port No PORTS 5.2.3663.0 7/15/2002 (Standard port types)
msports.inf Not Available ACPI\PNP0501\1
System CMOS/real time clock No SYSTEM 5.2.3663.0 7/15/2002
(Standard system devices) machine.inf Not Available
ACPI\PNP0B00\4&25F73A82&0
System board No SYSTEM 5.2.3663.0 7/15/2002 (Standard system
devices) machine.inf Not Available ACPI\PNP0C01\2
Standard Dual Channel PCI IDE Controller No HDC 5.2.3663.0 7/15/2002
(Standard IDE ATA/ATAPI controllers) mshdc.inf Not Available
PCI\VEN_1166&DEV_0212&SUBSYS_02121166&REV_93\3&13C0B0C5&0&79
Primary IDE Channel No HDC 5.2.3663.0 7/15/2002 (Standard IDE
ATA/ATAPI controllers) mshdc.inf Not Available
PCIIDE\IDECHANNEL\4&10A8249&0&0
CD-ROM Drive No CDROM 5.2.3663.0 7/15/2002 (Standard CD-ROM
drives) cdrom.inf Not Available IDE\CDROMTEAC_CD-
224E_____3.7D____\5&3125DC91&0&0.0.0
Secondary IDE ChannelNo HDC 5.2.3663.0 7/15/2002 (Standard IDE
ATA/ATAPI controllers) mshdc.inf Not Available
PCIIDE\IDECHANNEL\4&10A8249&0&1
PCI standard ISA bridgeNo SYSTEM 5.2.3663.0 7/15/2002 (Standard
system devices)machine.inf Not Available
PCI\VEN_1166&DEV_0225&SUBSYS_00000000&REV_00\3&13C0B0C5&0&7B
ISAPNP Read Data Port No SYSTEM 5.2.3663.0 7/15/2002
(Standard system devices) machine.inf Not Available
ISAPNP\READDATAPORT\0
PCI standard host CPU bridge No SYSTEM 5.2.3663.0 7/15/2002
(Standard system devices) machine.inf Not Available
PCI\VEN_1166&DEV_0010&SUBSYS_00000000&REV_03\3&13C0B0C5&0&80
PCI standard host CPU bridge No SYSTEM 5.2.3663.0 7/15/2002
(Standard system devices) machine.inf Not Available
PCI\VEN_1166&DEV_0010&SUBSYS_00000000&REV_03\3&13C0B0C5&0&82
PCI standard host CPU bridge No SYSTEM 5.2.3663.0 7/15/2002
(Standard system devices) machine.inf Not Available
PCI\VEN_1166&DEV_0010&SUBSYS_00000000&REV_03\3&13C0B0C5&0&88
PCI standard host CPU bridge No SYSTEM 5.2.3663.0 7/15/2002
(Standard system devices) machine.inf Not Available
PCI\VEN_1166&DEV_0010&SUBSYS_00000000&REV_03\3&13C0B0C5&0&8A
PCI standard host CPU bridge No SYSTEM 5.2.3663.0 7/15/2002
(Standard system devices) machine.inf Not Available
PCI\VEN_1166&DEV_0010&SUBSYS_00000000&REV_03\3&13C0B0C5&0&90
PCI standard host CPU bridge No SYSTEM 5.2.3663.0 7/15/2002
(Standard system devices) machine.inf Not Available
PCI\VEN_1166&DEV_0010&SUBSYS_00000000&REV_03\3&13C0B0C5&0&92
PCI busNo SYSTEM 5.2.3663.0 7/15/2002 (Standard system devices)
machine.inf Not Available ACPI\PNP0A03\2
DELL PERC 3/QC Plus RAID Controller No SCSIADAPTER 5.2.22.4 12/3/2002
DELL oem5.inf Not Available
PCI\VEN_101E&DEV_1960&SUBSYS_05031028&REV_01\3&1070020&0&08
DELL PV22XS Backplane No SYSTEM 5.2.3663.0 7/15/2002 Dell
scsidev.inf Not Available
SCSI\PROCESSOR&VEN_DELL&PROD_PV22XS&REV_E.10\4&339A7227&B&260
DELL PV22XS Backplane No SYSTEM 5.2.3663.0 7/15/2002 Dell
scsidev.inf Not Available
SCSI\PROCESSOR&VEN_DELL&PROD_PV22XS&REV_E.10\4&339A7227&B&360

Copyright Dell

Disk drive No DISKDRIVE 5.2.3663.0 7/15/2002 (Standard disk drives)
disk.inf Not Available
SCSI\DISK&VEN_PERC&PROD__LD__0_PERCRAID&REV_\4&339A7227&B&400
RAID Virtual Device No SYSTEM 5.2.3663.0 7/15/2002 American
Megatrends, Inc. scsidev.inf Not Available
SCSI\OTHER&VEN___RAID&PROD__DUMMYDEVICE&REV_0000\4&339A7227&B&4
F0
DELL PERC 3/QC Plus RAID Controller No SCSIADAPTER 5.2.22.4 12/3/2002
DELL oem5.inf Not Available
PCI\VEN_101E&DEV_1960&SUBSYS_05031028&REV_01\3&1070020&0&10
DELL PV22XS Backplane No SYSTEM 5.2.3663.0 7/15/2002 Dell
scsidev.inf Not Available
SCSI\PROCESSOR&VEN_DELL&PROD_PV22XS&REV_E.10\4&3626F71A&9&060
DELL PV22XS Backplane No SYSTEM 5.2.3663.0 7/15/2002 Dell
scsidev.inf Not Available
SCSI\PROCESSOR&VEN_DELL&PROD_PV22XS&REV_E.10\4&3626F71A&9&160
DELL PV22XS Backplane No SYSTEM 5.2.3663.0 7/15/2002 Dell
scsidev.inf Not Available
SCSI\PROCESSOR&VEN_DELL&PROD_PV22XS&REV_E.10\4&3626F71A&9&260
DELL PV22XS Backplane No SYSTEM 5.2.3663.0 7/15/2002 Dell
scsidev.inf Not Available
SCSI\PROCESSOR&VEN_DELL&PROD_PV22XS&REV_E.10\4&3626F71A&9&360
Disk drive No DISKDRIVE 5.2.3663.0 7/15/2002 (Standard disk drives)
disk.inf Not Available
SCSI\DISK&VEN_PERC&PROD__LD__0_PERCRAID&REV_\4&3626F71A&9&400
RAID Virtual Device No SYSTEM 5.2.3663.0 7/15/2002 American
Megatrends, Inc. scsidev.inf Not Available
SCSI\OTHER&VEN___RAID&PROD__DUMMYDEVICE&REV_0000\4&3626F71A&9&4
F0
PCI busNo SYSTEM 5.2.3663.0 7/15/2002 (Standard system devices)
machine.inf Not Available ACPI\PNP0A03\3
Broadcom NetXtreme Gigabit Ethernet No NET 2.67.0.0 7/15/2002
Broadcom netb57xp.inf Not Available
PCI\VEN_14E4&DEV_1644&SUBSYS_01091028&REV_14\3&29E81982&0&08
Broadcom NetXtreme Gigabit Ethernet No NET 2.67.0.0 7/15/2002
Broadcom netb57xp.inf Not Available
PCI\VEN_14E4&DEV_1644&SUBSYS_01091028&REV_14\3&29E81982&0&10
PCI busNo SYSTEM 5.2.3663.0 7/15/2002 (Standard system devices)
machine.inf Not Available ACPI\PNP0A03\4
DELL PERC 3/QC Plus RAID Controller No SCSIADAPTER 5.2.22.4 12/3/2002
DELL oem5.inf Not Available
PCI\VEN_101E&DEV_1960&SUBSYS_05031028&REV_01\3&172E68DD&0&08
DELL PV22XS Backplane No SYSTEM 5.2.3663.0 7/15/2002 Dell
scsidev.inf Not Available
SCSI\PROCESSOR&VEN_DELL&PROD_PV22XS&REV_E.10\4&344086EB&8&060
DELL PV22XS Backplane No SYSTEM 5.2.3663.0 7/15/2002 Dell
scsidev.inf Not Available
SCSI\PROCESSOR&VEN_DELL&PROD_PV22XS&REV_E.10\4&344086EB&8&160
DELL PV22XS Backplane No SYSTEM 5.2.3663.0 7/15/2002 Dell
scsidev.inf Not Available
SCSI\PROCESSOR&VEN_DELL&PROD_PV22XS&REV_E.10\4&344086EB&8&260
DELL PV22XS Backplane No SYSTEM 5.2.3663.0 7/15/2002 Dell
scsidev.inf Not Available
SCSI\PROCESSOR&VEN_DELL&PROD_PV22XS&REV_E.10\4&344086EB&8&360

Copyright Dell

RAID Virtual Device No SYSTEM 5.2.3663.0 7/15/2002 American Megatrends, Inc. scsidev.inf Not Available
SCSI\OTHER&VEN___RAID&PROD__DUMMYDEVICE&REV_0000\4&344086EB&8&4F0
Disk drive No DISKDRIVE 5.2.3663.0 7/15/2002 (Standard disk drives)
disk.inf Not Available
SCSI\DISK&VEN_PERC&PROD__LD__0_PERCRAID&REV_\4&344086EB&8&500
DELL PERC 3/QC Plus RAID Controller No SCSIADAPTER 5.2.22.4 12/3/2002
DELL oem5.inf Not Available
PCI\VEN_101E&DEV_1960&SUBSYS_05031028&REV_01\3&172E68DD&0&10
DELL PV22XS Backplane No SYSTEM 5.2.3663.0 7/15/2002 Dell
scsidev.inf Not Available
SCSI\PROCESSOR&VEN_DELL&PROD_PV22XS&REV_E.10\4&1537843A&2&060
DELL PV22XS Backplane No SYSTEM 5.2.3663.0 7/15/2002 Dell
scsidev.inf Not Available
SCSI\PROCESSOR&VEN_DELL&PROD_PV22XS&REV_E.10\4&1537843A&2&160
DELL PV22XS Backplane No SYSTEM 5.2.3663.0 7/15/2002 Dell
scsidev.inf Not Available
SCSI\PROCESSOR&VEN_DELL&PROD_PV22XS&REV_E.10\4&1537843A&2&260
DELL PV22XS Backplane No SYSTEM 5.2.3663.0 7/15/2002 Dell
scsidev.inf Not Available
SCSI\PROCESSOR&VEN_DELL&PROD_PV22XS&REV_E.10\4&1537843A&2&360
Disk drive No DISKDRIVE 5.2.3663.0 7/15/2002 (Standard disk drives)
disk.inf Not Available
SCSI\DISK&VEN_PERC&PROD__LD__0_PERCRAID&REV_\4&1537843A&2&400
RAID Virtual Device No SYSTEM 5.2.3663.0 7/15/2002 American Megatrends, Inc. scsidev.inf Not Available
SCSI\OTHER&VEN___RAID&PROD__DUMMYDEVICE&REV_0000\4&1537843A&2&4F0
PCI busNo SYSTEM 5.2.3663.0 7/15/2002 (Standard system devices)
machine.inf Not Available ACPI\PNP0A03\5
DELL PERC 3/QC Plus RAID Controller No SCSIADAPTER 5.2.22.4 12/3/2002
DELL oem5.inf Not Available
PCI\VEN_101E&DEV_1960&SUBSYS_05031028&REV_01\3&474B838&0&08
DELL PV22XS Backplane No SYSTEM 5.2.3663.0 7/15/2002 Dell
scsidev.inf Not Available
SCSI\PROCESSOR&VEN_DELL&PROD_PV22XS&REV_E.10\4&24CFDEA1&7&060
DELL PV22XS Backplane No SYSTEM 5.2.3663.0 7/15/2002 Dell
scsidev.inf Not Available
SCSI\PROCESSOR&VEN_DELL&PROD_PV22XS&REV_E.10\4&24CFDEA1&7&160
DELL PV22XS Backplane No SYSTEM 5.2.3663.0 7/15/2002 Dell
scsidev.inf Not Available
SCSI\PROCESSOR&VEN_DELL&PROD_PV22XS&REV_E.10\4&24CFDEA1&7&260
DELL PV22XS Backplane No SYSTEM 5.2.3663.0 7/15/2002 Dell
scsidev.inf Not Available
SCSI\PROCESSOR&VEN_DELL&PROD_PV22XS&REV_E.10\4&24CFDEA1&7&360
Disk drive No DISKDRIVE 5.2.3663.0 7/15/2002 (Standard disk drives)
disk.inf Not Available
SCSI\DISK&VEN_PERC&PROD__LD__0_PERCRAID&REV_\4&24CFDEA1&7&400
RAID Virtual Device No SYSTEM 5.2.3663.0 7/15/2002 American Megatrends, Inc. scsidev.inf Not Available
SCSI\OTHER&VEN___RAID&PROD__DUMMYDEVICE&REV_0000\4&24CFDEA1&7&4F0

Copyright Dell

DELL PERC 3/QC Plus RAID Controller No SCSIADAPTER 5.2.22.4 12/3/2002
DELL oem5.inf Not Available
PCI\VEN_101E&DEV_1960&SUBSYS_05031028&REV_01\3&474B838&0&10
DELL PV22XS Backplane No SYSTEM 5.2.3663.0 7/15/2002 Dell
scsidev.inf Not Available
SCSI\PROCESSOR&VEN_DELL&PROD_PV22XS&REV_E.10\4&5C6DBF0&2&060
DELL PV22XS Backplane No SYSTEM 5.2.3663.0 7/15/2002 Dell
scsidev.inf Not Available
SCSI\PROCESSOR&VEN_DELL&PROD_PV22XS&REV_E.10\4&5C6DBF0&2&160
DELL PV22XS Backplane No SYSTEM 5.2.3663.0 7/15/2002 Dell
scsidev.inf Not Available
SCSI\PROCESSOR&VEN_DELL&PROD_PV22XS&REV_E.10\4&5C6DBF0&2&260
DELL PV22XS Backplane No SYSTEM 5.2.3663.0 7/15/2002 Dell
scsidev.inf Not Available
SCSI\PROCESSOR&VEN_DELL&PROD_PV22XS&REV_E.10\4&5C6DBF0&2&360
Disk drive No DISKDRIVE 5.2.3663.0 7/15/2002 (Standard disk drives)
disk.inf Not Available
SCSI\DISK&VEN_PERC&PROD__LD__0_PERCRAID&REV_\4&5C6DBF0&2&400
RAID Virtual Device No SYSTEM 5.2.3663.0 7/15/2002 American
Megatrends, Inc. scsidev.inf Not Available
SCSI\OTHER&VEN___RAID&PROD__DUMMYDEVICE&REV_0000\4&5C6DBF0&2&4F
0
PCI bus No SYSTEM 5.2.3663.0 7/15/2002 (Standard system devices)
machine.inf Not Available ACPI\PNP0A03\6
PCI bus No SYSTEM 5.2.3663.0 7/15/2002 (Standard system devices)
machine.inf Not Available ACPI\PNP0A03\7
QLogic QLA23xx PCI Fibre Channel Adapter No SCSIADAPTER 8.2.2.10
4/23/2003 QLogic oem10.inf Not Available
PCI\VEN_1077&DEV_2312&SUBSYS_01001077&REV_02\3&20FEA912&0&08
Qlogic processor device No SYSTEM 5.2.3663.0 7/15/2002 QLOGIC
scsidev.inf Not Available
SCSI\PROCESSOR&VEN_QLOGIC&PROD_PSEUDO_LUN&REV_\4&E923D&1&07F0
ACPI Fixed Feature Button No SYSTEM 5.2.3663.0 7/15/2002
(Standard system devices) machine.inf Not Available
ACPI\FIXEDBUTTON\2&DABA3FF&0
Logical Disk Manager No SYSTEM 5.2.3663.0 7/15/2002 (Standard
system devices)machine.inf Not Available ROOT\DMIO\0000
Volume Manager No SYSTEM 5.2.3663.0 7/15/2002 (Standard
system devices)machine.inf Not Available ROOT\FTDISK\0000
Generic volume No VOLUME 5.2.3663.0 7/15/2002 Microsoft
volume.inf Not Available
STORAGE\VOLUME\1&30A96598&0&SIGNATURE9FA99FA9OFFSET7E00LENGTH43
CF44C00
Generic volume No VOLUME 5.2.3663.0 7/15/2002 Microsoft
volume.inf Not Available
STORAGE\VOLUME\1&30A96598&0&SIGNATUREF58E7B1OFFSET7E00LENGTH290
0144400
Generic volume No VOLUME 5.2.3663.0 7/15/2002 Microsoft
volume.inf Not Available
STORAGE\VOLUME\1&30A96598&0&SIGNATUREF58E7B1OFFSET290014C200LEN
GTH16BFDB4E00
Generic volume No VOLUME 5.2.3663.0 7/15/2002 Microsoft
volume.inf Not Available
STORAGE\VOLUME\1&30A96598&0&SIGNATUREF58E7B1OFFSET3FBFF01000LEN
GTH6400297200

Copyright Dell

Generic volume No VOLUME 5.2.3663.0 7/15/2002 Microsoft
volume.inf Not Available
STORAGE\VOLUME\1&30A96598&0&SIGNATUREF58E7B3OFFSET7E00LENGTH2900144400
Generic volume No VOLUME 5.2.3663.0 7/15/2002 Microsoft
volume.inf Not Available
STORAGE\VOLUME\1&30A96598&0&SIGNATUREF58E7B3OFFSET290014C200LENGTH16BFDB4E00
Generic volume No VOLUME 5.2.3663.0 7/15/2002 Microsoft
volume.inf Not Available
STORAGE\VOLUME\1&30A96598&0&SIGNATUREF58E7B3OFFSET3FBFF01000LENGTH6400297200
Generic volume No VOLUME 5.2.3663.0 7/15/2002 Microsoft
volume.inf Not Available
STORAGE\VOLUME\1&30A96598&0&SIGNATUREF58E7B4OFFSET7E00LENGTH2900144400
Generic volume No VOLUME 5.2.3663.0 7/15/2002 Microsoft
volume.inf Not Available
STORAGE\VOLUME\1&30A96598&0&SIGNATUREF58E7B4OFFSET290014C200LENGTH16BFDB4E00
Generic volume No VOLUME 5.2.3663.0 7/15/2002 Microsoft
volume.inf Not Available
STORAGE\VOLUME\1&30A96598&0&SIGNATUREF58E7B4OFFSET3FBFF01000LENGTH6400297200
Generic volume No VOLUME 5.2.3663.0 7/15/2002 Microsoft
volume.inf Not Available
STORAGE\VOLUME\1&30A96598&0&SIGNATUREF58E7B2OFFSET7E00LENGTH2900144400
Generic volume No VOLUME 5.2.3663.0 7/15/2002 Microsoft
volume.inf Not Available
STORAGE\VOLUME\1&30A96598&0&SIGNATUREF58E7B2OFFSET290014C200LENGTH16BFDB4E00
Generic volume No VOLUME 5.2.3663.0 7/15/2002 Microsoft
volume.inf Not Available
STORAGE\VOLUME\1&30A96598&0&SIGNATUREF58E7B2OFFSET3FBFF01000LENGTH6400297200
Generic volume No VOLUME 5.2.3663.0 7/15/2002 Microsoft
volume.inf Not Available
STORAGE\VOLUME\1&30A96598&0&SIGNATUREF58E7B0OFFSET7E00LENGTH2900144400
Generic volume No VOLUME 5.2.3663.0 7/15/2002 Microsoft
volume.inf Not Available
STORAGE\VOLUME\1&30A96598&0&SIGNATUREF58E7B0OFFSET290014C200LENGTH16BFDB4E00
Generic volume No VOLUME 5.2.3663.0 7/15/2002 Microsoft
volume.inf Not Available
STORAGE\VOLUME\1&30A96598&0&SIGNATUREF58E7B0OFFSET3FBFF01000LENGTH6400297200
Generic volume No VOLUME 5.2.3663.0 7/15/2002 Microsoft
volume.inf Not Available
STORAGE\VOLUME\1&30A96598&0&SIGNATURE1E24D8F0OFFSET7E00LENGTH3E7FCAF800
AFD Networking Support Environment Not Available LEGACYDRIVER Not Available
Not Available Not Available Not Available Not Available
ROOT\LEGACY_AFD\0000

Copyright Dell

Beep Not Available LEGACYDRIVER Not Available Not Available Not Available Not Available Not Available ROOT\LEGACY_BEEP\0000
CRC Disk Filter Driver Not Available LEGACYDRIVER Not Available Not Available Not Available Not Available Not Available ROOT\LEGACY_CRCDISK\0000
dac2w2k Not Available LEGACYDRIVER Not Available Not Available Not Available Not Available Not Available ROOT\LEGACY_DAC2W2K\0000
dmboot Not Available LEGACYDRIVER Not Available Not Available Not Available Not Available Not Available ROOT\LEGACY_DMBOOT\0000
dmload Not Available LEGACYDRIVER Not Available Not Available Not Available Not Available Not Available ROOT\LEGACY_DMLOAD\0000
em Not Available LEGACYDRIVER Not Available Not Available Not Available Not Available Not Available ROOT\LEGACY_EM\0000
Fips Not Available LEGACYDRIVER Not Available Not Available Not Available Not Available Not Available ROOT\LEGACY_FIPS\0000
Generic Packet Classifier Not Available LEGACYDRIVER Not Available Not Available Not Available Not Available Not Available ROOT\LEGACY_GPC\0000
IPSEC driver Not Available LEGACYDRIVER Not Available Not Available Not Available Not Available Not Available ROOT\LEGACY_IPSEC\0000
ksecdd Not Available LEGACYDRIVER Not Available Not Available Not Available Not Available Not Available ROOT\LEGACY_KSECDD\0000
macxp32 Not Available LEGACYDRIVER Not Available Not Available Not Available Not Available Not Available ROOT\LEGACY_MACXP32\0000
mnmdd Not Available LEGACYDRIVER Not Available Not Available Not Available Not Available Not Available ROOT\LEGACY_MNMDD\0000
mountmgr Not Available LEGACYDRIVER Not Available Not Available Not Available Not Available Not Available ROOT\LEGACY_MOUNTMGR\0000
NDIS System Driver Not Available LEGACYDRIVER Not Available Not Available Not Available Not Available Not Available ROOT\LEGACY_NDIS\0000
Remote Access NDIS TAPI Driver Not Available LEGACYDRIVER Not Available Not Available Not Available Not Available Not Available ROOT\LEGACY_NDISTAPI\0000
NDIS Usermode I/O Protocol Not Available LEGACYDRIVER Not Available Not Available Not Available Not Available Not Available ROOT\LEGACY_NDISUIO\0000
NDProxy Not Available LEGACYDRIVER Not Available Not Available Not Available Not Available Not Available ROOT\LEGACY_NDPROXY\0000
NetBios over Tcpip Not Available LEGACYDRIVER Not Available Not Available Not Available Not Available Not Available ROOT\LEGACY_NETBT\0000
Null Not Available LEGACYDRIVER Not Available Not Available Not Available Not Available Not Available ROOT\LEGACY_NULL\0000
Partition Manager Not Available LEGACYDRIVER Not Available Not Available Not Available Not Available Not Available ROOT\LEGACY_PARTMGR\0000
ParVdm Not Available LEGACYDRIVER Not Available Not Available Not Available Not Available Not Available ROOT\LEGACY_PARVDM\0000
qlvika Not Available LEGACYDRIVER Not Available Not Available Not Available Not Available Not Available ROOT\LEGACY_QLVIKA\0000
Remote Access Auto Connection Driver Not Available LEGACYDRIVER Not Available Not Available Not Available Not Available Not Available ROOT\LEGACY_RASACD\0000
RDPCDD Not Available LEGACYDRIVER Not Available Not Available Not Available Not Available Not Available ROOT\LEGACY_RDPCDD\0000
TCP/IP Protocol Driver Not Available LEGACYDRIVER Not Available Not Available Not Available Not Available Not Available ROOT\LEGACY_TCPIP\0000
VGA Display Controller. Not Available LEGACYDRIVER Not Available Not Available Not Available Not Available Not Available ROOT\LEGACY_VGASAVE\0000

Copyright Dell

volsnap Not Available LEGACYDRIVER Not Available Not Available Not Available
Not Available Not Available ROOT\LEGACY_VOLSNAP\0000
Remote Access IP ARP Driver Not Available LEGACYDRIVER Not Available Not
Available Not Available Not Available Not Available
ROOT\LEGACY_WANARP\0000
Audio Codecs No MEDIA 5.2.3663.0 7/15/2002 (Standard system devices)
wave.inf Not Available ROOT\MEDIA\MS_MMACM
Legacy Audio Drivers No MEDIA 5.2.3663.0 7/15/2002 (Standard system
devices) wave.inf Not Available ROOT\MEDIA\MS_MMDRV
Media Control Devices No MEDIA 5.2.3663.0 7/15/2002 (Standard system
devices) wave.inf Not Available ROOT\MEDIA\MS_MMMCI
Legacy Video Capture Devices No MEDIA 5.2.3663.0 7/15/2002 (Standard
system devices)wave.inf Not Available ROOT\MEDIA\MS_MMVCD
Video Codecs No MEDIA 5.2.3663.0 7/15/2002 (Standard system devices)
wave.inf Not Available ROOT\MEDIA\MS_MMVID
WAN Miniport (L2TP) No NET 5.2.3663.0 7/15/2002 Microsoft
netrasa.inf Not Available ROOT\MS_L2TPMINIPORT\0000
WAN Miniport (IP) No NET 5.2.3663.0 7/15/2002 Microsoft
netrasa.inf Not Available ROOT\MS_NDISWANIP\0000
WAN Miniport (PPPOE) No NET 5.2.3663.0 7/15/2002 Microsoft
netrasa.inf Not Available ROOT\MS_PPPOEMINIPORT\0000
WAN Miniport (PPTP) No NET 5.2.3663.0 7/15/2002 Microsoft
netrasa.inf Not Available ROOT\MS_PPTPMINIPORT\0000
Direct Parallel No NET 5.2.3663.0 7/15/2002 Microsoft netrasa.inf
Not Available ROOT\MS_PTIMINIPORT\0000
Terminal Server Device Redirector No SYSTEM 5.2.3663.0 7/15/2002
(Standard system devices) machine.inf Not Available ROOT\RDPDR\0000
Terminal Server Keyboard Driver No SYSTEM 5.2.3663.0 7/15/2002
(Standard system devices) machine.inf Not Available ROOT\RDP_KBD\0000
Terminal Server Mouse Driver No SYSTEM 5.2.3663.0 7/15/2002
(Standard system devices) machine.inf Not Available ROOT\RDP_MOU\0000
Plug and Play Software Device Enumerator No SYSTEM 5.2.3663.0
7/15/2002 (Standard system devices) machine.inf Not Available
ROOT\SYSTEM\0000
Microcode Update Device No SYSTEM 5.2.3663.0 7/15/2002
(Standard system devices) machine.inf Not Available ROOT\SYSTEM\0001

[Environment Variables]

Variable Value User Name
ClusterLog C:\WINDOWS\Cluster\cluster.log <SYSTEM>
ComSpec %SystemRoot%\system32\cmd.exe <SYSTEM>
NUMBER_OF_PROCESSORS 8 <SYSTEM>
OS Windows_NT <SYSTEM>
Path
%SystemRoot%\system32;%SystemRoot%;%SystemRoot%\System32\Wbem;C:\MSTP
CC.422\SETUP\scripts\utility;C:\Program Files\Microsoft SQL Server\MSSQL\Binn;.;C:\Program
Files\Microsoft SQL Server\80\Tools\BINN <SYSTEM>
PATHEXT .COM;.EXE;.BAT;.CMD;.VBS;.VBE;.JS;.JSE;.WSF;.WSH <SYSTEM>
PROCESSOR_ARCHITECTURE x86 <SYSTEM>
PROCESSOR_IDENTIFIER x86 Family 15 Model 2 Stepping 5, GenuineIntel <SYSTEM>
PROCESSOR_LEVEL 15 <SYSTEM>
PROCESSOR_REVISION 0205 <SYSTEM>
TEMP %SystemRoot%\TEMP <SYSTEM>
TMP %SystemRoot%\TEMP <SYSTEM>

Copyright Dell

windir %SystemRoot% <SYSTEM>
TEMP %USERPROFILE%\Local Settings\Temp NT AUTHORITY\SYSTEM
TMP %USERPROFILE%\Local Settings\Temp NT AUTHORITY\SYSTEM
TEMP %USERPROFILE%\Local Settings\Temp PE6500\Administrator
TMP %USERPROFILE%\Local Settings\Temp PE6500\Administrator

[Print Jobs]

Document Size Owner Notify Status Time Submitted Start Time Until Time
Elapsed Time Pages Printed Job ID Priority Parameters Driver Print Processor
Host Print Queue Data Type Name

[Network Connections]

Local Name Remote Name Type Status User Name

[Running Tasks]

Name Path Process ID Priority Min Working Set Max Working Set Start
Time Version Size File Date
system idle process Not Available 0 0 Not Available Not Available Not
Available Not Available Not Available Not Available
system Not Available 4 8 0 1413120 Not Available Not Available
Not Available Not Available
smss.exe c:\windows\system32\smss.exe 368 11 204800 1413120
5/19/2003 11:34 AM 5.2.3663.0 (main.020715-1506) 46.00 KB (47,104 bytes)
7/29/2002 1:57 PM
csrss.exe Not Available 416 13 Not Available Not Available 5/19/2003
11:34 AM Not Available Not Available Not Available
winlogon.exe c:\windows\system32\winlogon.exe 440 13 204800 1413120
5/19/2003 11:34 AM 5.2.3663.0 (main.020715-1506) 512.00 KB (524,288 bytes)
7/29/2002 2:04 PM
services.exe c:\windows\system32\services.exe 640 9 204800 1413120
5/19/2003 11:34 AM 5.2.3663.0 (main.020715-1506) 99.00 KB (101,376 bytes)
7/29/2002 1:55 PM
lsass.exe c:\windows\system32\lsass.exe 652 9 204800 1413120
5/19/2003 11:34 AM 5.2.3663.0 (main.020715-1506) 13.00 KB (13,312 bytes)
7/29/2002 1:27 PM
svchost.exe c:\windows\system32\svchost.exe 812 8 204800 1413120
5/19/2003 11:34 AM 5.2.3663.0 (main.020715-1506) 12.00 KB (12,288 bytes)
7/29/2002 1:58 PM
svchost.exe c:\windows\system32\svchost.exe 864 8 204800 1413120
5/19/2003 11:34 AM 5.2.3663.0 (main.020715-1506) 12.00 KB (12,288 bytes)
7/29/2002 1:58 PM
svchost.exe c:\windows\system32\svchost.exe 968 8 204800 1413120
5/19/2003 11:34 AM 5.2.3663.0 (main.020715-1506) 12.00 KB (12,288 bytes)
7/29/2002 1:58 PM
explorer.exe c:\windows\explorer.exe 1388 8 204800 1413120 5/19/2003
11:35 AM 6.00.3663.0 (main.020715-1506) 989.50 KB (1,013,248 bytes)
7/29/2002 1:18 PM
sqlmangr.exe c:\program files\microsoft sql server\80\tools\binn\sqlmangr.exe 1464 8
204800 1413120 5/19/2003 11:35 AM 2000.080.0760.00 72.57 KB
(74,308 bytes) 5/8/2003 4:33 PM

Copyright Dell

mmc.exe c:\windows\system32\mmc.exe 1548 8 204800 1413120
5/19/2003 11:36 AM 5.2.3663.0 (main.020715-1506) 758.00 KB (776,192 bytes)
7/29/2002 1:29 PM
dmremote.exe c:\windows\system32\dmremote.exe 1596 8 204800 1413120
5/19/2003 11:36 AM 5.2.3663.0 (main.020715-1506) 14.50 KB (14,848 bytes)
7/29/2002 1:16 PM
dmadmin.exe c:\windows\system32\dmadmin.exe 1612 8 204800 1413120
5/19/2003 11:36 AM 5.2.3663.0 (main.020715-1506) 212.00 KB (217,088 bytes)
7/29/2002 1:16 PM
notepad.exe c:\windows\system32\notepad.exe 1724 8 204800 1413120
5/19/2003 11:37 AM 5.2.3663.0 (main.020715-1506) 66.00 KB (67,584 bytes)
7/29/2002 1:35 PM
cmd.exe c:\windows\system32\cmd.exe 1816 8 204800 1413120
5/19/2003 11:39 AM 5.2.3663.0 (main.020715-1506) 371.00 KB (379,904 bytes)
7/29/2002 1:11 PM
sqlservr.exe c:\program files\microsoft sql server\mssql\binn\sqlservr.exe 1828 13
204800 1413120 5/19/2003 11:39 AM 2000.080.0760.00 7.17 MB
(7,520,337 bytes) 5/8/2003 4:32 PM
cmd.exe c:\windows\system32\cmd.exe 1956 8 204800 1413120
5/19/2003 11:39 AM 5.2.3663.0 (main.020715-1506) 371.00 KB (379,904 bytes)
7/29/2002 1:11 PM
mspaint.exe c:\windows\system32\mspaint.exe 1520 8 204800 1413120
5/20/2003 11:10 AM 5.2.3663.0 (main.020715-1506) 333.50 KB (341,504 bytes)
9/25/2002 12:04 PM
helpctr.exe c:\windows\pchealth\helpctr\binaries\helpctr.exe 572 8 204800
1413120 5/20/2003 11:32 AM 5.2.3663.0 (main.020715-1506) 670.00 KB
(686,080 bytes) 9/25/2002 12:08 PM
helpsvc.exe c:\windows\pchealth\helpctr\binaries\helpsvc.exe916 8 204800
1413120 5/20/2003 11:32 AM 5.2.3663.0 (main.020715-1506) 683.50 KB
(699,904 bytes) 9/25/2002 12:08 PM
wmiprvse.exe Not Available 964 8 Not Available Not Available 5/20/2003
11:32 AM Not Available Not Available Not Available

[Loaded Modules]

Name Version Size File Date Manufacturer Path
smss 5.2.3663.0 (main.020715-1506) 46.00 KB (47,104 bytes)7/29/2002 1:57 PM
Microsoft Corporation c:\windows\system32\smss.exe
ntdll 5.2.3663.0 (main.020715-1506) 697.50 KB (714,240 bytes) 7/29/2002 1:36 PM
Microsoft Corporation c:\windows\system32\ntdll.dll
winlogon 5.2.3663.0 (main.020715-1506) 512.00 KB (524,288 bytes) 7/29/2002 2:04
PM Microsoft Corporation c:\windows\system32\winlogon.exe
kernel32 5.2.3663.0 (main.020715-1506) 934.50 KB (956,928 bytes) 7/29/2002 1:25
PM Microsoft Corporation c:\windows\system32\kernel32.dll
msvcrt 7.0.3663.0 (main.020715-1506) 319.50 KB (327,168 bytes) 7/29/2002 1:33 PM
Microsoft Corporation c:\windows\system32\msvcrt.dll
advapi32 5.2.3663.0 (main.020715-1506) 526.00 KB (538,624 bytes) 7/29/2002 1:09
PM Microsoft Corporation c:\windows\system32\advapi32.dll
rpcrt4 5.2.3663.0 (main.020715-1506) 544.50 KB (557,568 bytes) 7/29/2002 1:51 PM
Microsoft Corporation c:\windows\system32\rpcrt4.dll
user32 5.2.3663.0 (main.020715-1506) 547.50 KB (560,640 bytes) 7/29/2002 2:01 PM
Microsoft Corporation c:\windows\system32\user32.dll
gdi32 5.2.3663.0 (main.020715-1506) 246.00 KB (251,904 bytes) 7/29/2002 1:20 PM
Microsoft Corporation c:\windows\system32\gdi32.dll

Copyright Dell

userenv5.2.3663.0 (main.020715-1506) 710.00 KB (727,040 bytes) 7/29/2002 2:01 PM
Microsoft Corporation c:\windows\system32\userenv.dll
nddeapi5.2.3663.0 (main.020715-1506) 15.00 KB (15,360 bytes)7/29/2002 1:33 PM
Microsoft Corporation c:\windows\system32\nddeapi.dll
crypt32 5.131.3663.0 (main.020715-1506) 545.00 KB (558,080 bytes) 7/29/2002 1:14 PM Microsoft Corporation c:\windows\system32\crypt32.dll
msasn15.2.3663.0 (main.020715-1506) 51.00 KB (52,224 bytes)7/29/2002 1:31 PM
Microsoft Corporation c:\windows\system32\msasn1.dll
secur325.2.3663.0 (main.020715-1506) 57.00 KB (58,368 bytes)7/29/2002 1:55 PM
Microsoft Corporation c:\windows\system32\secur32.dll
winsta 5.2.3663.0 (main.020715-1506) 48.00 KB (49,152 bytes)7/29/2002 2:05 PM
Microsoft Corporation c:\windows\system32\winsta.dll
netapi32 5.2.3663.0 (main.020715-1506) 309.50 KB (316,928 bytes) 7/29/2002 1:34 PM Microsoft Corporation c:\windows\system32\netapi32.dll
profmap 5.2.3663.0 (main.020715-1506) 21.00 KB (21,504 bytes)7/29/2002 1:50 PM
Microsoft Corporation c:\windows\system32\profmap.dll
regapi 5.2.3663.0 (main.020715-1506) 47.00 KB (48,128 bytes)7/29/2002 1:51 PM
Microsoft Corporation c:\windows\system32\regapi.dll
ws2_32 5.2.3663.0 (main.020715-1506) 77.00 KB (78,848 bytes)7/29/2002 2:06 PM
Microsoft Corporation c:\windows\system32\ws2_32.dll
ws2help 5.2.3663.0 (main.020715-1506) 19.00 KB (19,456 bytes)7/29/2002 2:06 PM
Microsoft Corporation c:\windows\system32\ws2help.dll
authz 5.2.3663.0 (main.020715-1506) 56.50 KB (57,856 bytes)7/29/2002 1:09 PM
Microsoft Corporation c:\windows\system32\authz.dll
psapi 5.2.3663.0 (main.020715-1506) 21.00 KB (21,504 bytes)7/29/2002 1:50 PM
Microsoft Corporation c:\windows\system32\psapi.dll
version 5.2.3663.0 (main.020715-1506) 16.50 KB (16,896 bytes)7/29/2002 2:02 PM
Microsoft Corporation c:\windows\system32\version.dll
setupapi 5.2.3663.0 (main.020715-1506) 917.50 KB (939,520 bytes) 7/29/2002 1:55 PM Microsoft Corporation c:\windows\system32\setupapi.dll
msgina 5.2.3663.0 (main.020715-1506) 1.19 MB (1,252,864 bytes) 7/29/2002 1:32 PM
Microsoft Corporation c:\windows\system32\msgina.dll
shsvcs 6.00.3663.0 (main.020715-1506) 122.50 KB (125,440 bytes) 7/29/2002 1:56 PM Microsoft Corporation c:\windows\system32\shsvcs.dll
shlwapi 6.00.3663.0 (main.020715-1506) 269.00 KB (275,456 bytes) 7/29/2002 1:56 PM Microsoft Corporation c:\windows\system32\shlwapi.dll
sfc 5.2.3663.0 (main.020715-1506) 4.50 KB (4,608 bytes) 7/29/2002 1:55 PM
Microsoft Corporation c:\windows\system32\sfc.dll
sfc_os 5.2.3663.0 (main.020715-1506) 130.00 KB (133,120 bytes) 7/29/2002 1:55 PM
Microsoft Corporation c:\windows\system32\sfc_os.dll
wintrust 5.131.3663.0 (main.020715-1506) 155.00 KB (158,720 bytes) 7/29/2002 2:05 PM Microsoft Corporation c:\windows\system32\wintrust.dll
ole32 5.2.3663.0 (main.020715-1506) 1.08 MB (1,134,592 bytes) 7/29/2002 1:48 PM
Microsoft Corporation c:\windows\system32\ole32.dll
imagehlp 5.2.3663.0 (main.020715-1506) 123.00 KB (125,952 bytes) 7/29/2002 1:22 PM Microsoft Corporation c:\windows\system32\imagehlp.dll
comctl32 6.0 (main.020715-1506) 905.00 KB (926,720 bytes) 9/25/2002 6:55 AM
Microsoft Corporation c:\windows\winsxs\x86_microsoft.windows.common-controls_6595b64144ccf1df_6.0.100.0_x-ww_8417450b\comctl32.dll
winscard 5.2.3663.0 (main.020715-1506) 93.50 KB (95,744 bytes)7/29/2002 2:05 PM
Microsoft Corporation c:\windows\system32\winscard.dll
wtsapi32 5.2.3663.0 (main.020715-1506) 17.00 KB (17,408 bytes)7/29/2002 2:07 PM
Microsoft Corporation c:\windows\system32\wtsapi32.dll
sxs 5.2.3663.0 (main.020715-1506) 685.50 KB (701,952 bytes) 7/29/2002 1:58 PM
Microsoft Corporation c:\windows\system32\sxs.dll

Copyright Dell

winmm 5.2.3663.0 (main.020715-1506) 163.00 KB (166,912 bytes) 7/29/2002 2:04 PM
Microsoft Corporation c:\windows\system32\winmm.dll
rsaenh 5.2.3663.0 (main.020715-1506) 174.07 KB (178,248 bytes) 7/29/2002 1:51 PM
Microsoft Corporation c:\windows\system32\rsaenh.dll
wldap32 5.2.3663.0 (main.020715-1506) 167.00 KB (171,008 bytes) 7/29/2002 2:05 PM Microsoft Corporation c:\windows\system32\wldap32.dll
cscdll 5.2.3663.0 (main.020715-1506) 92.50 KB (94,720 bytes)7/29/2002 1:14 PM
Microsoft Corporation c:\windows\system32\cscdll.dll
wlnotify 5.2.3663.0 (main.020715-1506) 84.50 KB (86,528 bytes)7/29/2002 2:05 PM
Microsoft Corporation c:\windows\system32\wlnotify.dll
winspool 5.2.3663.0 (main.020715-1506) 131.50 KB (134,656 bytes) 7/29/2002 2:05 PM Microsoft Corporation c:\windows\system32\winspool.drv
mpr 5.2.3663.0 (main.020715-1506) 55.00 KB (56,320 bytes)7/29/2002 1:30 PM
Microsoft Corporation c:\windows\system32\mpr.dll
shell32 6.00.3663.0 (main.020715-1506) 7.69 MB (8,067,072 bytes) 7/29/2002 1:56 PM Microsoft Corporation c:\windows\system32\shell32.dll
comctl32 5.82 (main.020715-1506) 559.50 KB (572,928 bytes) 9/25/2002 6:55 AM Microsoft Corporation c:\windows\winsxs\x86_microsoft.windows.common-controls_6595b64144ccf1df_5.82.0.0_x-ww_8a69ba05\comctl32.dll
uxtheme 6.00.3663.0 (main.020715-1506) 190.50 KB (195,072 bytes)
7/29/2002 2:02 PM Microsoft Corporation c:\windows\system32\uxtheme.dll
samlib 5.2.3663.0 (main.020715-1506) 40.50 KB (41,472 bytes)7/29/2002 1:54 PM
Microsoft Corporation c:\windows\system32\samlib.dll
cscui 5.2.3663.0 (main.020715-1506) 299.00 KB (306,176 bytes) 7/29/2002 1:14 PM
Microsoft Corporation c:\windows\system32\cscui.dll
oleaut32 5.2.3663.0 483.50 KB (495,104 bytes) 7/29/2002 1:48 PM
Microsoft Corporation c:\windows\system32\oleaut32.dll
clbcatq 2001.12.4593.0 (main.020715-1506) 465.50 KB (476,672 bytes) 9/25/2002 12:04 PM Microsoft Corporation c:\windows\system32\clbcatq.dll
comres 2001.12.4593.0 (main.020715-1506) 778.00 KB (796,672 bytes) 7/29/2002 1:14 PM Microsoft Corporation c:\windows\system32\comres.dll
ntmarta 5.2.3663.0 (main.020715-1506) 110.50 KB (113,152 bytes) 7/29/2002 1:36 PM
Microsoft Corporation c:\windows\system32\ntmarta.dll
wbemprox 5.2.3663.0 (main.020715-1506) 16.00 KB (16,384 bytes)9/25/2002 12:04 PM
Microsoft Corporation c:\windows\system32\wbem\wbemprox.dll
wbemcomn 5.2.3663.0 (main.020715-1506) 205.00 KB (209,920 bytes) 9/25/2002 12:04 PM Microsoft Corporation c:\windows\system32\wbem\wbemcomn.dll
wbemsvc 5.2.3663.0 (main.020715-1506) 42.50 KB (43,520 bytes)9/25/2002 12:04 PM
Microsoft Corporation c:\windows\system32\wbem\wbemsvc.dll
fastprox5.2.3663.0 (main.020715-1506) 434.50 KB (444,928 bytes) 9/25/2002 12:04 PM
Microsoft Corporation c:\windows\system32\wbem\fastprox.dll
msvcp60 6.05.2144.0 388.00 KB (397,312 bytes) 7/29/2002 1:33 PM
Microsoft Corporation c:\windows\system32\msvcp60.dll
ntdsapi 5.2.3663.0 (main.020715-1506) 67.00 KB (68,608 bytes)7/29/2002 1:36 PM
Microsoft Corporation c:\windows\system32\ntdsapi.dll
dnsapi 5.2.3663.0 (main.020715-1506) 141.50 KB (144,896 bytes) 7/29/2002 1:16 PM
Microsoft Corporation c:\windows\system32\dnsapi.dll
services 5.2.3663.0 (main.020715-1506) 99.00 KB (101,376 bytes) 7/29/2002 1:55 PM Microsoft Corporation c:\windows\system32\services.exe
scesrv 5.2.3663.0 (main.020715-1506) 301.00 KB (308,224 bytes) 7/29/2002 1:54 PM
Microsoft Corporation c:\windows\system32\scesrv.dll
umpnpmgr 5.2.3663.0 (main.020715-1506) 115.00 KB (117,760 bytes) 7/29/2002 2:01 PM Microsoft Corporation c:\windows\system32\umpnpmgr.dll
ncobjapi 5.2.3663.0 (main.020715-1506) 33.00 KB (33,792 bytes)7/29/2002 1:33 PM
Microsoft Corporation c:\windows\system32\ncobjapi.dll

Copyright Dell

eventlog 5.2.3663.0 (main.020715-1506) 58.50 KB (59,904 bytes)7/29/2002 1:18 PM
Microsoft Corporation c:\windows\system32\eventlog.dll
lsass 5.2.3663.0 (main.020715-1506) 13.00 KB (13,312 bytes)7/29/2002 1:27 PM
Microsoft Corporation c:\windows\system32\lsass.exe
lsasrv 5.2.3663.0 (main.020715-1506) 711.00 KB (728,064 bytes) 7/29/2002 1:27 PM
Microsoft Corporation c:\windows\system32\lsasrv.dll
samsrv 5.2.3663.0 (main.020715-1506) 408.00 KB (417,792 bytes) 7/29/2002 1:54 PM
Microsoft Corporation c:\windows\system32\samsrv.dll
cryptdll 5.2.3663.0 (main.020715-1506) 30.00 KB (30,720 bytes)7/29/2002 1:14 PM
Microsoft Corporation c:\windows\system32\cryptdll.dll
msprivs 5.2.3663.0 (main.020715-1506) 44.00 KB (45,056 bytes)7/29/2002 1:32 PM
Microsoft Corporation c:\windows\system32\msprivs.dll
kerberos 5.2.3663.0 (main.020715-1506) 299.00 KB (306,176 bytes) 7/29/2002 1:25 PM Microsoft Corporation c:\windows\system32\kerberos.dll
msv1_0 5.2.3663.0 (main.020715-1506) 114.50 KB (117,248 bytes) 7/29/2002 1:33 PM
Microsoft Corporation c:\windows\system32\msv1_0.dll
netlogon 5.2.3663.0 (main.020715-1506) 401.50 KB (411,136 bytes) 7/29/2002 1:34 PM Microsoft Corporation c:\windows\system32\netlogon.dll
w32time 5.2.3663.0 (main.020715-1506) 205.50 KB (210,432 bytes) 7/29/2002 2:02 PM Microsoft Corporation c:\windows\system32\w32time.dll
iphlpapi 5.2.3663.0 (main.020715-1506) 80.50 KB (82,432 bytes)7/29/2002 1:22 PM
Microsoft Corporation c:\windows\system32\iphlpapi.dll
schannel 5.2.3663.0 (main.020715-1506) 138.50 KB (141,824 bytes) 7/29/2002 1:54 PM Microsoft Corporation c:\windows\system32\schannel.dll
wdigest 5.2.3663.0 (main.020715-1506) 59.50 KB (60,928 bytes)7/29/2002 2:03 PM
Microsoft Corporation c:\windows\system32\wdigest.dll
rassfm 5.2.3663.0 (main.020715-1506) 20.50 KB (20,992 bytes)7/29/2002 1:50 PM
Microsoft Corporation c:\windows\system32\rassfm.dll
kdcsvc 5.2.3663.0 (main.020715-1506) 190.50 KB (195,072 bytes) 7/29/2002 1:25 PM
Microsoft Corporation c:\windows\system32\kdcsvc.dll
ntdsa 5.2.3663.0 (main.020715-1506) 1.40 MB (1,465,344 bytes) 7/29/2002 1:36 PM
Microsoft Corporation c:\windows\system32\ntdsa.dll
ntdsatq 5.2.3663.0 (main.020715-1506) 27.50 KB (28,160 bytes)7/29/2002 1:36 PM
Microsoft Corporation c:\windows\system32\ntdsatq.dll
mswsock 5.2.3663.0 (main.020715-1506) 243.50 KB (249,344 bytes) 7/29/2002 1:33 PM Microsoft Corporation c:\windows\system32\mswsock.dll
esent 5.2.3663.0 (main.020715-1506) 925.50 KB (947,712 bytes) 7/29/2002 1:18 PM
Microsoft Corporation c:\windows\system32\esent.dll
certcli 5.2.3663.0 (main.020715-1506) 215.00 KB (220,160 bytes) 7/29/2002 1:10 PM
Microsoft Corporation c:\windows\system32\certcli.dll
atl 3.05.2144 82.00 KB (83,968 bytes)7/29/2002 1:09 PM Microsoft Corporation
c:\windows\system32\atl.dll
cryptui 5.131.3663.0 (main.020715-1506) 463.50 KB (474,624 bytes) 7/29/2002 1:14 PM Microsoft Corporation c:\windows\system32\cryptui.dll
scecli 5.2.3663.0 (main.020715-1506) 174.00 KB (178,176 bytes) 7/29/2002 1:54 PM
Microsoft Corporation c:\windows\system32\scecli.dll
dssenh 5.2.3663.0 (main.020715-1506) 129.07 KB (132,168 bytes) 7/29/2002 1:17 PM
Microsoft Corporation c:\windows\system32\dssenh.dll
svchost 5.2.3663.0 (main.020715-1506) 12.00 KB (12,288 bytes)7/29/2002 1:58 PM
Microsoft Corporation c:\windows\system32\svchost.exe
rpcss 5.2.3663.0 (main.020715-1506) 266.00 KB (272,384 bytes) 7/29/2002 1:51 PM
Microsoft Corporation c:\windows\system32\rpcss.dll
wshtcpip 5.2.3663.0 (main.020715-1506) 17.00 KB (17,408 bytes)7/29/2002 2:07 PM
Microsoft Corporation c:\windows\system32\wshtcpip.dll

Copyright Dell

termsrv 5.2.3663.0 (main.020715-1506) 215.00 KB (220,160 bytes) 9/25/2002 12:04 PM
Microsoft Corporation c:\windows\system32\termsrv.dll
icaapi 5.2.3663.0 (main.020715-1506) 10.00 KB (10,240 bytes)9/25/2002 12:04 PM
Microsoft Corporation c:\windows\system32\icaapi.dll
mstlsapi 5.2.3663.0 (main.020715-1506) 103.00 KB (105,472 bytes) 7/29/2002 1:33
PM Microsoft Corporation c:\windows\system32\mstlsapi.dll
activeds 5.2.3663.0 (main.020715-1506) 184.50 KB (188,928 bytes) 7/29/2002 1:08
PM Microsoft Corporation c:\windows\system32\activeds.dll
adsldpc 5.2.3663.0 (main.020715-1506) 139.50 KB (142,848 bytes) 7/29/2002 1:09 PM
Microsoft Corporation c:\windows\system32\adsldpc.dll
credui 5.2.3663.0 (main.020715-1506) 161.00 KB (164,864 bytes) 7/29/2002 1:14 PM
Microsoft Corporation c:\windows\system32\credui.dll
wkssvc 5.2.3663.0 (main.020715-1506) 122.00 KB (124,928 bytes) 7/29/2002 2:05 PM
Microsoft Corporation c:\windows\system32\wkssvc.dll
dmserver 5.2.3663.0 (main.020715-1506) 22.00 KB (22,528 bytes)7/29/2002 1:16 PM
Microsoft Corporation c:\windows\system32\dmserver.dll
srvsvc 5.2.3663.0 (main.020715-1506) 87.50 KB (89,600 bytes)7/29/2002 1:57 PM
Microsoft Corporation c:\windows\system32\srvsvc.dll
wmisvc 5.2.3663.0 (main.020715-1506) 113.50 KB (116,224 bytes) 9/25/2002 12:04 PM
Microsoft Corporation c:\windows\system32\wbem\wmisvc.dll
vssapi 5.2.3663.0 (main.020715-1506) 471.00 KB (482,304 bytes) 7/29/2002 2:02 PM
Microsoft Corporation c:\windows\system32\vssapi.dll
es 2001.12.4593.0 (main.020715-1506) 218.00 KB (223,232 bytes) 7/29/2002 1:18
PM Microsoft Corporation c:\windows\system32\es.dll
sens 5.2.3663.0 (main.020715-1506) 35.00 KB (35,840 bytes)7/29/2002 1:55 PM
Microsoft Corporation c:\windows\system32\sens.dll
wbemcore 5.2.3663.0 (main.020715-1506) 448.50 KB (459,264 bytes) 9/25/2002
12:04 PM Microsoft Corporation c:\windows\system32\wbem\wbemcore.dll
esscli 5.2.3663.0 (main.020715-1506) 232.00 KB (237,568 bytes) 9/25/2002 12:04 PM
Microsoft Corporation c:\windows\system32\wbem\esscli.dll
wmiutils5.2.3663.0 (main.020715-1506) 88.50 KB (90,624 bytes)9/25/2002 12:04 PM
Microsoft Corporation c:\windows\system32\wbem\wmiutils.dll
repdrvfs 5.2.3663.0 (main.020715-1506) 140.00 KB (143,360 bytes) 9/25/2002
12:04 PM Microsoft Corporation c:\windows\system32\wbem\repdrvfs.dll
wmiprvsd 5.2.3663.0 (main.020715-1506) 403.50 KB (413,184 bytes) 9/25/2002
12:04 PM Microsoft Corporation c:\windows\system32\wbem\wmiprvsd.dll
wbemess 5.2.3663.0 (main.020715-1506) 253.00 KB (259,072 bytes) 9/25/2002
12:04 PM Microsoft Corporation c:\windows\system32\wbem\wbemess.dll
ncprov 5.2.3663.0 (main.020715-1506) 42.50 KB (43,520 bytes)9/25/2002 12:04 PM
Microsoft Corporation c:\windows\system32\wbem\ncprov.dll
netman 5.2.3663.0 (main.020715-1506) 147.00 KB (150,528 bytes) 7/29/2002 1:34 PM
Microsoft Corporation c:\windows\system32\netman.dll
mprapi 5.2.3663.0 (main.020715-1506) 78.00 KB (79,872 bytes)7/29/2002 1:30 PM
Microsoft Corporation c:\windows\system32\mprapi.dll
rtutils 5.2.3663.0 (main.020715-1506) 31.00 KB (31,744 bytes)7/29/2002 1:52 PM
Microsoft Corporation c:\windows\system32\rtutils.dll
rasapi32 5.2.3663.0 (main.020715-1506) 217.00 KB (222,208 bytes) 7/29/2002 1:50
PM Microsoft Corporation c:\windows\system32\rasapi32.dll
rasman 5.2.3663.0 (main.020715-1506) 55.00 KB (56,320 bytes)7/29/2002 1:50 PM
Microsoft Corporation c:\windows\system32\rasman.dll
tapi32 5.2.3663.0 (main.020715-1506) 169.50 KB (173,568 bytes) 7/29/2002 1:59 PM
Microsoft Corporation c:\windows\system32\tapi32.dll
wzcsvc 5.2.3663.0 (main.020715-1506) 271.00 KB (277,504 bytes) 7/16/2002 8:48 AM
Microsoft Corporation c:\windows\system32\wzcsvc.dll

Copyright Dell

wmi 5.2.3663.0 (main.020715-1506) 6.50 KB (6,656 bytes) 7/29/2002 2:05 PM
Microsoft Corporation c:\windows\system32\wmi.dll
dhcpcsvc 5.2.3663.0 (main.020715-1506) 101.00 KB (103,424 bytes) 7/29/2002 1:16
PM Microsoft Corporation c:\windows\system32\dhcpcsvc.dll
wzcsapi5.2.3663.0 (main.020715-1506) 24.00 KB (24,576 bytes)7/16/2002 8:48 AM
Microsoft Corporation c:\windows\system32\wzcsapi.dll
netshell 5.2.3663.0 (main.020715-1506) 1.57 MB (1,648,128 bytes) 7/29/2002 1:35 PM
Microsoft Corporation c:\windows\system32\netshell.dll
clusapi 5.2.3663.0 (main.020715-1506) 54.50 KB (55,808 bytes)7/29/2002 1:11 PM
Microsoft Corporation c:\windows\system32\clusapi.dll
hnetcfg 5.2.3663.0 (main.020715-1506) 241.50 KB (247,296 bytes) 7/29/2002 1:20 PM
Microsoft Corporation c:\windows\system32\hnetcfg.dll
wininet 6.00.3663.0 (main.020715-1506) 581.00 KB (594,944 bytes) 7/29/2002 2:04
PM Microsoft Corporation c:\windows\system32\wininet.dll
rasdlg 5.2.3663.0 (main.020715-1506) 637.00 KB (652,288 bytes) 7/29/2002 1:50 PM
Microsoft Corporation c:\windows\system32\rasdlg.dll
netcfgx 5.2.3663.0 (main.020715-1506) 616.00 KB (630,784 bytes) 7/29/2002 1:34 PM
Microsoft Corporation c:\windows\system32\netcfgx.dll
winipsec 5.2.3663.0 (main.020715-1506) 29.00 KB (29,696 bytes)7/29/2002 2:04 PM
Microsoft Corporation c:\windows\system32\winipsec.dll
pchsvc 5.2.3663.0 (main.020715-1506) 30.00 KB (30,720 bytes)9/25/2002 12:08 PM
Microsoft Corporation c:\windows\pchealth\helpctr\binaries\pchsvc.dll
wbemcons 5.2.3663.0 (main.020715-1506) 69.00 KB (70,656 bytes)9/25/2002 12:04 PM
Microsoft Corporation c:\windows\system32\wbem\wbemcons.dll
explorer 6.00.3663.0 (main.020715-1506) 989.50 KB (1,013,248 bytes)
7/29/2002 1:18 PM Microsoft Corporation c:\windows\explorer.exe
browseui 6.00.3663.0 (main.020715-1506) 999.50 KB (1,023,488 bytes)
7/29/2002 1:10 PM Microsoft Corporation c:\windows\system32\browseui.dll
shdocvw 6.00.3663.0 (main.020715-1506) 1.28 MB (1,341,952 bytes)
7/29/2002 1:55 PM Microsoft Corporation c:\windows\system32\shdocvw.dll
apphelp5.2.3663.0 (main.020715-1506) 117.00 KB (119,808 bytes) 7/29/2002 1:09 PM
Microsoft Corporation c:\windows\system32\apphelp.dll
themeui6.00.3663.0 (main.020715-1506) 360.00 KB (368,640 bytes) 7/29/2002 1:59
PM Microsoft Corporation c:\windows\system32\themeui.dll
msimg32 5.2.3663.0 (main.020715-1506) 4.50 KB (4,608 bytes) 7/29/2002 1:32 PM
Microsoft Corporation c:\windows\system32\msimg32.dll
linkinfo 5.2.3663.0 (main.020715-1506) 15.50 KB (15,872 bytes)7/29/2002 1:27 PM
Microsoft Corporation c:\windows\system32\linkinfo.dll
ntshrui 6.00.3663.0 (main.020715-1506) 134.50 KB (137,728 bytes) 7/29/2002 1:36
PM Microsoft Corporation c:\windows\system32\ntshrui.dll
urlmon 6.00.3663.0 (main.020715-1506) 442.00 KB (452,608 bytes) 7/29/2002 2:01
PM Microsoft Corporation c:\windows\system32\urlmon.dll
webcheck 6.00.3663.0 (main.020715-1506) 253.50 KB (259,584 bytes)
7/29/2002 2:04 PM Microsoft Corporation c:\windows\system32\webcheck.dll
wsock32 5.2.3663.0 (main.020715-1506) 22.00 KB (22,528 bytes)7/29/2002 2:07 PM
Microsoft Corporation c:\windows\system32\wsock32.dll
stobject5.2.3663.0 (main.020715-1506) 116.50 KB (119,296 bytes) 7/29/2002 1:58 PM
Microsoft Corporation c:\windows\system32\stobject.dll
batmeter 6.00.3663.0 (main.020715-1506) 28.00 KB (28,672 bytes)7/29/2002 1:10
PM Microsoft Corporation c:\windows\system32\batmeter.dll
powrprof 6.00.3663.0 (main.020715-1506) 14.00 KB (14,336 bytes)7/29/2002 1:49
PM Microsoft Corporation c:\windows\system32\powrprof.dll
printui 5.2.3663.0 (main.020715-1506) 522.00 KB (534,528 bytes) 7/29/2002 1:49 PM
Microsoft Corporation c:\windows\system32\printui.dll

Copyright Dell

cfgmgr32 5.2.3663.0 (main.020715-1506) 17.00 KB (17,408 bytes)7/29/2002 1:11 PM
Microsoft Corporation c:\windows\system32\cfgmgr32.dll
drprov 5.2.3663.0 (main.020715-1506) 12.00 KB (12,288 bytes)7/29/2002 1:17 PM
Microsoft Corporation c:\windows\system32\drprov.dll
ntlanman 5.2.3663.0 (main.020715-1506) 39.50 KB (40,448 bytes)7/29/2002 1:36 PM
Microsoft Corporation c:\windows\system32\ntlanman.dll
netui0 5.2.3663.0 (main.020715-1506) 73.00 KB (74,752 bytes)7/29/2002 1:35 PM
Microsoft Corporation c:\windows\system32\netui0.dll
netui1 5.2.3663.0 (main.020715-1506) 176.50 KB (180,736 bytes) 7/29/2002 1:35 PM
Microsoft Corporation c:\windows\system32\netui1.dll
davclnt 5.2.3663.0 (main.020715-1506) 23.00 KB (23,552 bytes)7/29/2002 1:15 PM
Microsoft Corporation c:\windows\system32\davclnt.dll
browselc 6.00.3663.0 (main.020715-1506) 61.50 KB (62,976 bytes)7/29/2002 1:10 PM Microsoft Corporation c:\windows\system32\browselc.dll
shdoclc 6.00.3663.0 (main.020715-1506) 521.00 KB (533,504 bytes) 7/29/2002 1:55 PM Microsoft Corporation c:\windows\system32\shdoclc.dll
wzshlstb 3.0 (32-bit) 24.07 KB (24,644 bytes)11/22/2000 8:00 AM WinZip Computing, Inc. c:\progra~1\winzip\wzshlstb.dll
shimgvw 6.00.3663.0 (main.020715-1506) 417.50 KB (427,520 bytes)
7/29/2002 1:56 PM Microsoft Corporation c:\windows\system32\shimgvw.dll
gdiplus 5.2.3663.0 (main.020715-1506) 1.65 MB (1,728,512 bytes) 9/25/2002 6:55 AM
Microsoft Corporation
c:\windows\winsxs\x86_microsoft.windows.gdiplus_6595b64144ccf1df_1.0.3000.0_x-ww_4a2ca156\gdiplus.dll
zipfldr 6.00.3663.0 (main.020715-1506) 314.50 KB (322,048 bytes) 7/29/2002 2:07 PM Microsoft Corporation c:\windows\system32\zipfldr.dll
sendmail 6.00.3663.0 (main.020715-1506) 54.00 KB (55,296 bytes)7/29/2002 1:55 PM Microsoft Corporation c:\windows\system32\sendmail.dll
mydocs 6.00.3663.0 (main.020715-1506) 87.00 KB (89,088 bytes)7/29/2002 1:33 PM
Microsoft Corporation c:\windows\system32\mydocs.dll
sqlmangr 2000.080.0760.00 72.57 KB (74,308 bytes)5/8/2003 4:33 PM
Microsoft Corporation c:\program files\microsoft sql server\80\tools\binn\sqlmangr.exe
sqlunirl 2000.080.0728.00 176.56 KB (180,800 bytes) 7/29/2002 1:57 PM
Microsoft Corporation c:\windows\system32\sqlunirl.dll
comdlg32 6.00.3663.0 (main.020715-1506) 255.00 KB (261,120 bytes)
7/29/2002 1:11 PM Microsoft Corporation c:\windows\system32\comdlg32.dll
w95scm 2000.080.0760.00 48.56 KB (49,728 bytes)5/8/2003 4:32 PM
Microsoft Corporation c:\program files\microsoft sql server\80\tools\binn\w95scm.dll
odbc32 3.520.8713.0 212.00 KB (217,088 bytes) 7/29/2002 1:47 PM Microsoft Corporation c:\windows\system32\odbc32.dll
sqlsvc 2000.080.0760.00 92.56 KB (94,784 bytes)5/8/2003 4:32 PM Microsoft Corporation c:\program files\microsoft sql server\80\tools\binn\sqlsvc.dll
odbcbcp 2000.081.9030.00 24.00 KB (24,576 bytes)7/29/2002 1:47 PM
Microsoft Corporation c:\windows\system32\odbcbcp.dll
sqlresld 2000.080.0382.00 28.56 KB (29,248 bytes)5/8/2003 4:32 PM Microsoft Corporation c:\program files\microsoft sql server\80\tools\binn\sqlresld.dll
odbcint 3.520.8713.0 92.00 KB (94,208 bytes)7/29/2002 1:47 PM Microsoft Corporation
c:\windows\system32\odbcint.dll
resutils 5.2.3663.0 (main.020715-1506) 56.00 KB (57,344 bytes)7/29/2002 1:51 PM
Microsoft Corporation c:\windows\system32\resutils.dll
mfc42u 6.05.2178.0 960.00 KB (983,040 bytes) 7/29/2002 1:29 PM Microsoft Corporation c:\windows\system32\mfc42u.dll
sqlsvc 2000.080.0194.00 24.00 KB (24,576 bytes)5/8/2003 4:32 PM Microsoft Corporation c:\program files\microsoft sql server\80\tools\binn\resources\1033\sqlsvc.rll

Copyright Dell

sqlmangr 2000.080.0194.00 96.00 KB (98,304 bytes)5/8/2003 4:33 PM
Microsoft Corporation c:\program files\microsoft sql
server\80\tools\binn\resources\1033\sqlmangr.rll
mmc 5.2.3663.0 (main.020715-1506) 758.00 KB (776,192 bytes) 7/29/2002 1:29 PM
Microsoft Corporation c:\windows\system32\mmc.exe
oleacc 4.2.5406.0 (main.020715-1506) 164.50 KB (168,448 bytes) 7/29/2002 1:48 PM
Microsoft Corporation c:\windows\system32\oleacc.dll
mmcbase 5.2.3663.0 (main.020715-1506) 68.00 KB (69,632 bytes)7/29/2002 1:29 PM
Microsoft Corporation c:\windows\system32\mmcbase.dll
mmcndmgr 5.2.3663.0 (main.020715-1506) 1.08 MB (1,136,640 bytes) 7/29/2002 1:29
PM Microsoft Corporation c:\windows\system32\mmcndmgr.dll
msxml3 8.40.8806.0 1.06 MB (1,107,968 bytes) 7/29/2002 1:33 PM Microsoft
Corporation c:\windows\system32\msxml3.dll
mycomput 5.2.3663.0 (main.020715-1506) 91.00 KB (93,184 bytes)7/29/2002 1:33 PM
Microsoft Corporation c:\windows\system32\mycomput.dll
ntmsmgr 5.2.3663.0 (main.020715-1506) 475.50 KB (486,912 bytes) 7/29/2002 1:36
PM Microsoft Corporation c:\windows\system32\ntmsmgr.dll
ntmsapi 5.2.3663.0 (main.020715-1506) 42.00 KB (43,008 bytes)7/29/2002 1:36 PM
Microsoft Corporation c:\windows\system32\ntmsapi.dll
dfrgsnap 5.2.3663.0 (main.020715-1506) 36.00 KB (36,864 bytes)7/29/2002 1:16 PM
Microsoft Corp. and Executive Software International, Inc.
c:\windows\system32\dfrgsnap.dll
dfrgres 5.2.3663.0 (main.020715-1506) 50.50 KB (51,712 bytes)7/29/2002 1:16 PM
Microsoft Corp. and Executive Software International, Inc.
c:\windows\system32\dfrgres.dll
dmdskmgr 5.2.3663.0 (main.020715-1506) 153.50 KB (157,184 bytes) 7/29/2002 1:16
PM Microsoft Corporation c:\windows\system32\dmdskmgr.dll
dmutil 5.2.3663.0 (main.020715-1506) 50.50 KB (51,712 bytes)7/16/2002 8:46 AM
Microsoft Corporation c:\windows\system32\dmutil.dll
dmdskres 5.2.3663.0 (main.020715-1506) 116.00 KB (118,784 bytes) 7/29/2002 1:16
PM Microsoft Corporation c:\windows\system32\dmdskres.dll
els 5.2.3663.0 (main.020715-1506) 168.00 KB (172,032 bytes) 7/29/2002 1:17 PM
Microsoft Corporation c:\windows\system32\els.dll
riched32 5.2.3663.0 (main.020715-1506) 3.50 KB (3,584 bytes) 7/29/2002 1:51 PM
Microsoft Corporation c:\windows\system32\riched32.dll
riched20 5.31.23.1217 394.50 KB (403,968 bytes) 7/29/2002 1:51 PM
Microsoft Corporation c:\windows\system32\riched20.dll
filemgmt 5.2.3663.0 (main.020715-1506) 313.50 KB (321,024 bytes) 7/29/2002 1:18
PM Microsoft Corporation c:\windows\system32\filemgmt.dll
localsec 5.2.3663.0 (main.020715-1506) 206.00 KB (210,944 bytes) 7/29/2002 1:27
PM Microsoft Corporation c:\windows\system32\localsec.dll
adsnt 5.2.3663.0 (main.020715-1506) 236.50 KB (242,176 bytes) 7/29/2002 1:09 PM
Microsoft Corporation c:\windows\system32\adsnt.dll
smlogcfg 5.2.3663.0 (main.020715-1506) 333.00 KB (340,992 bytes) 7/29/2002 1:57
PM Microsoft Corporation c:\windows\system32\smlogcfg.dll
pdh 5.2.3663.0 (main.020715-1506) 262.00 KB (268,288 bytes) 7/29/2002 1:49 PM
Microsoft Corporation c:\windows\system32\pdh.dll
devmgr 5.2.3663.0 (main.020715-1506) 263.00 KB (269,312 bytes) 7/29/2002 1:15 PM
Microsoft Corporation c:\windows\system32\devmgr.dll
dmdlgs 5.2.3663.0 (main.020715-1506) 271.00 KB (277,504 bytes) 7/29/2002 1:16 PM
Microsoft Corporation c:\windows\system32\dmdlgs.dll
dmview 5.2.3663.0 (main.020715-1506) 61.50 KB (62,976 bytes)7/29/2002 1:16 PM
Microsoft Corporation c:\windows\system32\dmview.ocx
mlang 6.00.3663.0 (main.020715-1506) 564.50 KB (578,048 bytes) 7/29/2002 1:29
PM Microsoft Corporation c:\windows\system32\mlang.dll

Copyright Dell

vds_ps 5.2.3663.0 (main.020715-1506) 21.00 KB (21,504 bytes)7/29/2002 2:02 PM
Microsoft Corporation c:\windows\system32\vds_ps.dll
dmivcitf 5.2.3663.0 (main.020715-1506) 50.00 KB (51,200 bytes)7/29/2002 1:16 PM
Microsoft Corporation c:\windows\system32\dmivcitf.dll
dmintf 5.2.3663.0 (main.020715-1506) 19.50 KB (19,968 bytes)7/29/2002 1:16 PM
Microsoft Corporation c:\windows\system32\dmintf.dll
dmremote 5.2.3663.0 (main.020715-1506) 14.50 KB (14,848 bytes)7/29/2002 1:16 PM
Microsoft Corporation c:\windows\system32\dmremote.exe
dmadmin 5.2.3663.0 (main.020715-1506) 212.00 KB (217,088 bytes) 7/29/2002 1:16 PM Microsoft Corporation c:\windows\system32\dmadmin.exe
osuninst 5.2.3663.0 (main.020715-1506) 114.50 KB (117,248 bytes) 7/29/2002 1:48 PM Microsoft Corporation c:\windows\system32\osuninst.dll
cabinet 5.2.3663.0 (main.020715-1506) 54.00 KB (55,296 bytes)7/29/2002 1:10 PM
Microsoft Corporation c:\windows\system32\cabinet.dll
fmifs 5.2.3663.0 (main.020715-1506) 17.00 KB (17,408 bytes)7/29/2002 1:19 PM
Microsoft Corporation c:\windows\system32\fmifs.dll
ulib 5.2.3663.0 (main.020715-1506) 265.00 KB (271,360 bytes) 7/29/2002 2:00 PM
Microsoft Corporation c:\windows\system32\ulib.dll
ifsutil 5.2.3663.0 (main.020715-1506) 71.50 KB (73,216 bytes)7/29/2002 1:22 PM
Microsoft Corporation c:\windows\system32\ifsutil.dll
notepad 5.2.3663.0 (main.020715-1506) 66.00 KB (67,584 bytes)7/29/2002 1:35 PM
Microsoft Corporation c:\windows\system32\notepad.exe
cmd 5.2.3663.0 (main.020715-1506) 371.00 KB (379,904 bytes) 7/29/2002 1:11 PM
Microsoft Corporation c:\windows\system32\cmd.exe
sqlservr 2000.080.0760.00 7.17 MB (7,520,337 bytes) 5/8/2003 4:32 PM
Microsoft Corporation c:\program files\microsoft sql server\mssql\binn\sqlservr.exe
opends60 2000.080.0194.00 24.06 KB (24,639 bytes)5/8/2003 4:32 PM
Microsoft Corporation c:\program files\microsoft sql server\mssql\binn\opends60.dll
ums 2000.080.0760.00 52.55 KB (53,808 bytes)5/8/2003 4:32 PM Microsoft Corporation c:\program files\microsoft sql server\mssql\binn\ums.dll
sqlsort 2000.080.0760.00 576.56 KB (590,396 bytes) 5/8/2003 4:32 PM
Microsoft Corporation c:\program files\microsoft sql server\mssql\binn\sqlsort.dll
msvcirt 7.0.3663.0 (main.020715-1506) 49.50 KB (50,688 bytes)7/29/2002 1:33 PM
Microsoft Corporation c:\windows\system32\msvcirt.dll
sqlevn70 2000.080.0760.00 28.00 KB (28,672 bytes)5/8/2003 4:32 PM
Microsoft Corporation c:\program files\microsoft sql server\mssql\binn\resources\1033\sqlevn70.rll
xolehlp 2001.12.4593.0 (main.020715-1506) 8.00 KB (8,192 bytes) 9/25/2002 12:04 PM
Microsoft Corporation c:\windows\system32\xolehlp.dll
msdtcprx 2001.12.4593.0 (main.020715-1506) 405.50 KB (415,232 bytes)
9/25/2002 12:04 PM Microsoft Corporation c:\windows\system32\msdtcprx.dll
mtxclu 2001.12.4593.0 (main.020715-1506) 72.50 KB (74,240 bytes)7/29/2002 1:33 PM
Microsoft Corporation c:\windows\system32\mtxclu.dll
winrnr 5.2.3663.0 (main.020715-1506) 14.50 KB (14,848 bytes)7/29/2002 2:05 PM
Microsoft Corporation c:\windows\system32\winrnr.dll
rasadhlp 5.2.3663.0 (main.020715-1506) 6.00 KB (6,144 bytes) 7/29/2002 1:50 PM
Microsoft Corporation c:\windows\system32\rasadhlp.dll
ssnetlib 2000.080.0760.00 80.56 KB (82,492 bytes)5/8/2003 4:32 PM Microsoft Corporation c:\program files\microsoft sql server\mssql\binn\ssnetlib.dll
ssnmpn70 2000.080.0534.00 24.56 KB (25,148 bytes)5/8/2003 4:32 PM
Microsoft Corporation c:\program files\microsoft sql server\mssql\binn\ssnmpn70.dll
security 5.2.3663.0 (main.020715-1506) 5.00 KB (5,120 bytes) 7/29/2002 1:55 PM
Microsoft Corporation c:\windows\system32\security.dll
ssmslpcn 2000.080.0760.00 28.56 KB (29,244 bytes)5/8/2003 4:32 PM
Microsoft Corporation c:\program files\microsoft sql server\mssql\binn\ssmslpcn.dll

Copyright Dell

ssmsqlgc 2000.080.0760.00 32.56 KB (33,340 bytes)5/9/2003 8:24 AM
Microsoft Corporation c:\program files\microsoft sql server\mssql\binn\ssmsqlgc.dll
qlvipl Not Available 92.05 KB (94,262 bytes)2/19/2003 5:45 PM Not Available
c:\windows\system32\qlvipl.dll
sqloledb 2000.081.8713.02 484.00 KB (495,616 bytes) 9/25/2002 12:07 PM
Microsoft Corporation c:\program files\common files\system\ole db\sqloledb.dll
msdart 2.72.8713.0 built by: (dagbuild) 140.00 KB (143,360 bytes) 7/29/2002 1:31 PM
Microsoft Corporation c:\windows\system32\msdart.dll
msdatl3 2.72.8713.0 built by: (dagbuild) 84.00 KB (86,016 bytes)9/25/2002 12:07 PM
Microsoft Corporation c:\program files\common files\system\ole db\msdatl3.dll
oledb32 2.72.8713.0 built by: (dagbuild) 424.00 KB (434,176 bytes) 9/25/2002 12:07 PM
Microsoft Corporation c:\program files\common files\system\ole db\oledb32.dll
oledb32r 2.72.8713.0 built by: (dagbuild) 68.00 KB (69,632 bytes)9/25/2002 12:07 PM
Microsoft Corporation c:\program files\common files\system\ole db\oledb32r.dll
xpstar 2000.080.0760.00 280.56 KB (287,296 bytes) 5/8/2003 4:32 PM
Microsoft Corporation c:\program files\microsoft sql server\mssql\binn\xpstar.dll
sqlresld 2000.080.0382.00 28.56 KB (29,248 bytes)5/8/2003 4:32 PM Microsoft
Corporation c:\program files\microsoft sql server\mssql\binn\sqlresld.dll
sqlsvc 2000.080.0760.00 92.56 KB (94,784 bytes)5/8/2003 4:32 PM Microsoft
Corporation c:\program files\microsoft sql server\mssql\binn\sqlsvc.dll
w95scm 2000.080.0760.00 48.56 KB (49,728 bytes)5/8/2003 4:32 PM
Microsoft Corporation c:\program files\microsoft sql server\mssql\binn\w95scm.dll
shfolder 6.00.3663.0 (main.020715-1506) 22.50 KB (23,040 bytes)7/29/2002 1:56 PM
Microsoft Corporation c:\windows\system32\shfolder.dll
sqlsvc 2000.080.0194.00 24.00 KB (24,576 bytes)5/8/2003 4:32 PM Microsoft
Corporation c:\program files\microsoft sql server\mssql\binn\resources\1033\sqlsvc.rll
xpstar 2000.080.0760.00 36.00 KB (36,864 bytes)5/8/2003 4:32 PM Microsoft
Corporation c:\program files\microsoft sql server\mssql\binn\resources\1033\xpstar.rll
mspaint 5.2.3663.0 (main.020715-1506) 333.50 KB (341,504 bytes) 9/25/2002 12:04 PM
Microsoft Corporation c:\windows\system32\mspaint.exe
imm32 5.2.3663.0 (main.020715-1506) 104.00 KB (106,496 bytes) 7/29/2002 1:22 PM
Microsoft Corporation c:\windows\system32\imm32.dll
helpctr 5.2.3663.0 (main.020715-1506) 670.00 KB (686,080 bytes) 9/25/2002 12:08 PM
Microsoft Corporation c:\windows\pchealth\helpctr\binaries\helpctr.exe
hcappres 5.2.3663.0 (main.020715-1506) 6.50 KB (6,656 bytes) 9/25/2002 12:08 PM
Microsoft Corporation c:\windows\pchealth\helpctr\binaries\hcappres.dll
itss 5.2.3663.0 (main.020715-1506) 118.50 KB (121,344 bytes) 7/29/2002 1:24 PM
Microsoft Corporation c:\windows\system32\itss.dll
pchshell 5.2.3663.0 (main.020715-1506) 94.00 KB (96,256 bytes)9/25/2002 12:08 PM
Microsoft Corporation c:\windows\pchealth\helpctr\binaries\pchshell.dll
mshtml 6.00.3663.0 (main.020715-1506) 2.57 MB (2,690,560 bytes) 7/29/2002 1:32
PM Microsoft Corporation c:\windows\system32\mshtml.dll
msimtf 5.2.3663.0 (main.020715-1506) 141.00 KB (144,384 bytes) 7/29/2002 1:32 PM
Microsoft Corporation c:\windows\system32\msimtf.dll
msctf 5.2.3663.0 (main.020715-1506) 273.00 KB (279,552 bytes) 7/29/2002 1:31 PM
Microsoft Corporation c:\windows\system32\msctf.dll
jscript 5.6.0.7727 412.00 KB (421,888 bytes) 7/29/2002 1:24 PM Microsoft
Corporation c:\windows\system32\jscript.dll
msls31 3.10.349.0 137.00 KB (140,288 bytes) 7/29/2002 1:32 PM Microsoft
Corporation c:\windows\system32\msls31.dll
mshtmled 6.00.3663.0 (main.020715-1506) 424.00 KB (434,176 bytes)
7/29/2002 1:32 PM Microsoft Corporation c:\windows\system32\mshtmled.dll
vbscript 5.6.0.7727 388.00 KB (397,312 bytes) 7/29/2002 2:02 PM Microsoft
Corporation c:\windows\system32\vbscript.dll

Copyright Dell

mfc42 6.05.2178.0 960.00 KB (983,040 bytes) 7/29/2002 1:29 PM Microsoft Corporation c:\windows\system32\mfc42.dll
msinfo 5.2.3663.0 (main.020715-1506) 352.00 KB (360,448 bytes) 9/25/2002 12:08 PM Microsoft Corporation c:\windows\pchealth\helpctr\binaries\msinfo.dll
helpsvc 5.2.3663.0 (main.020715-1506) 683.50 KB (699,904 bytes) 9/25/2002 12:08 PM Microsoft Corporation c:\windows\pchealth\helpctr\binaries\helpsvc.exe

[Services]

Display Name Name State Start Mode Service Type Path Error Control Start Name Tag ID
Alerter Alerter Stopped Disabled Share Process c:\windows\system32\svchost.exe -k localservice Normal NT AUTHORITY\LocalService 0
Application Layer Gateway Service ALG Stopped Manual Own Process c:\windows\system32\alg.exe Normal NT AUTHORITY\LocalService 0
Application Management AppMgmt Stopped Manual Share Process c:\windows\system32\svchost.exe -k netsvcs Normal LocalSystem 0
Windows Audio AudioSrv Stopped Disabled Share Process c:\windows\system32\svchost.exe -k netsvcs Normal LocalSystem 0
Background Intelligent Transfer Service BITS Stopped Manual Share Process c:\windows\system32\svchost.exe -k netsvcs Normal LocalSystem 0
Computer Browser Browser Stopped Manual Share Process c:\windows\system32\svchost.exe -k netsvcs Normal LocalSystem 0
Indexing Service CiSvc Stopped Manual Share Process c:\windows\system32\cisvc.exe Normal LocalSystem 0
ClipBook ClipSrv Stopped Disabled Own Process c:\windows\system32\clipsrv.exe Normal LocalSystem 0
COM+ System Application COMSysApp Stopped Manual Own Process c:\windows\system32\dllhost.exe /processid:{02d4b3f1-fd88-11d1-960d-00805fc79235} Normal LocalSystem 0
Cryptographic Services CryptSvc Stopped Disabled Share Process c:\windows\system32\svchost.exe -k netsvcs Normal LocalSystem 0
Distributed File System Dfs Stopped Manual Own Process c:\windows\system32\dfssvc.exe Normal LocalSystem 0
DHCP Client Dhcp Stopped Manual Share Process c:\windows\system32\svchost.exe -k networkservice Normal NT AUTHORITY\NetworkService 0
Logical Disk Manager Administrative Service dmadmin Running Manual Share Process c:\windows\system32\dmadmin.exe /com Normal LocalSystem 0
Logical Disk Manager dmserver Running Auto Share Process c:\windows\system32\svchost.exe -k netsvcs Normal LocalSystem 0
DNS Client Dnscache Stopped Manual Share Process c:\windows\system32\svchost.exe -k networkservice Normal NT AUTHORITY\NetworkService 0
Error Reporting Service ERSvc Stopped Manual Share Process c:\windows\system32\svchost.exe -k netsvcs Ignore LocalSystem 0
Event Log Eventlog Running Auto Share Process c:\windows\system32\services.exe Normal LocalSystem 0
COM+ Event System EventSystem Running Manual Share Process c:\windows\system32\svchost.exe -k netsvcs Normal LocalSystem 0
Help and Support helpsvc Running Manual Share Process c:\windows\system32\svchost.exe -k netsvcs Normal LocalSystem 0
Human Interface Device Access HidServ Stopped Disabled Share Process c:\windows\system32\svchost.exe -k netsvcs Normal LocalSystem 0

Copyright Dell

HTTP SSL HTTPFilter Stopped Manual Share Process
c:\windows\system32\lsass.exe Normal LocalSystem 0
IMAPI CD-Burning COM Service ImapiService Stopped Disabled Own
Process "c:\windows\system32\imapi.exe" Normal LocalSystem 0
Intersite Messaging IsmServ Stopped Disabled Own Process
c:\windows\system32\ismserv.exe Normal LocalSystem 0
Kerberos Key Distribution Center kdc Stopped Disabled Share Process
c:\windows\system32\lsass.exe Normal LocalSystem 0
Server lanmanserver Running Auto Share Process
c:\windows\system32\svchost.exe -k netsvcs Normal LocalSystem 0
Workstation lanmanworkstation Running Auto Share Process
c:\windows\system32\svchost.exe -k netsvcs Normal LocalSystem 0
License Logging LicenseService Stopped Manual Own Process
c:\windows\system32\llssrv.exe Normal NT AUTHORITY\NetworkService 0
TCP/IP NetBIOS Helper LmHosts Stopped Manual Share Process
c:\windows\system32\svchost.exe -k localservice Normal NT
AUTHORITY\LocalService 0
Messenger Messenger Stopped Disabled Share Process
c:\windows\system32\svchost.exe -k netsvcs Normal LocalSystem 0
NetMeeting Remote Desktop Sharing mnmsrvc Stopped Disabled Own
Process c:\windows\system32\mnmsrvc.exe Normal LocalSystem 0
Distributed Transaction Coordinator MSDTC Stopped Manual Own Process
c:\windows\system32\msdtc.exe Normal NT AUTHORITY\NetworkService 0
Windows Installer MSIServer Stopped Manual Share Process
c:\windows\system32\msiexec.exe /v Normal LocalSystem 0
MSSQLSERVER MSSQLSERVER Stopped Manual Own Process
c:\progra~1\micros~1\mssql\binn\sqlservr.exe Normal LocalSystem 0
MSSQLServerADHelper MSSQLServerADHelper Stopped Manual Own Process
c:\program files\microsoft sql server\80\tools\binn\sqladhlp.exe Normal LocalSystem
0
Network DDE NetDDE Stopped Disabled Share Process
c:\windows\system32\netdde.exe Normal LocalSystem 0
Network DDE DSDM NetDDEdsdm Stopped Disabled Share Process
c:\windows\system32\netdde.exe Normal LocalSystem 0
Net Logon Netlogon Stopped Manual Share Process
c:\windows\system32\lsass.exe Normal LocalSystem 0
Network Connections Netman Running Manual Share Process
c:\windows\system32\svchost.exe -k netsvcs Normal LocalSystem 0
Network Location Awareness (NLA) Nla Stopped Disabled Share Process
c:\windows\system32\svchost.exe -k netsvcs Normal LocalSystem 0
File Replication NtFrs Stopped Manual Own Process c:\windows\system32\ntfrs.exe
Ignore LocalSystem 0
NT LM Security Support Provider NtLmSsp Stopped Disabled Share
Process c:\windows\system32\lsass.exe Normal LocalSystem 0
Removable Storage NtmsSvc Stopped Manual Share Process
c:\windows\system32\svchost.exe -k netsvcs Normal LocalSystem 0
Plug and Play PlugPlay Running Auto Share Process
c:\windows\system32\services.exe Normal LocalSystem 0
IPSEC Services PolicyAgent Stopped Manual Share Process
c:\windows\system32\lsass.exe Normal LocalSystem 0
Protected Storage ProtectedStorage Stopped Manual Share Process
c:\windows\system32\lsass.exe Normal LocalSystem 0
Remote Access Auto Connection Manager RasAuto Stopped Manual Share
Process c:\windows\system32\svchost.exe -k netsvcs Normal LocalSystem 0

Copyright Dell

Remote Access Connection Manager RasMan Stopped Manual Share Process
c:\windows\system32\svchost.exe -k netsvcs Normal LocalSystem 0
Remote Desktop Help Session Manager RDSessMgr Stopped Manual Own Process
c:\windows\system32\sessmgr.exe Normal LocalSystem 0
Routing and Remote Access RemoteAccess Stopped Disabled Share Process
c:\windows\system32\svchost.exe -k netsvcs Normal LocalSystem 0
Remote Registry RemoteRegistry Stopped Manual Share Process
c:\windows\system32\svchost.exe -k regsvc Normal NT AUTHORITY\LocalService
0
Remote Procedure Call (RPC) Locator RpcLocator Stopped Manual Own Process
c:\windows\system32\locator.exe Normal NT AUTHORITY\NetworkService
0
Remote Procedure Call (RPC) RpcSs Running Auto Share Process
c:\windows\system32\svchost -k rpcss Normal LocalSystem 0
Resultant Set of Policy Provider RSoPProv Stopped Manual Share Process
c:\windows\system32\rsopprov.exe Normal LocalSystem 0
Special Administration Console Helper sacsvr Stopped Manual Share Process
c:\windows\system32\svchost.exe -k netsvcs Normal LocalSystem 0
Security Accounts Manager SamSs Running Auto Share Process
c:\windows\system32\lsass.exe Normal LocalSystem 0
Smart Card SCardSvr Stopped Manual Share Process
c:\windows\system32\scardsvr.exe Ignore NT AUTHORITY\LocalService 0
Task Scheduler Schedule Stopped Manual Share Process
c:\windows\system32\svchost.exe -k netsvcs Normal LocalSystem 0
Secondary Logon seclogon Stopped Manual Share Process
c:\windows\system32\svchost.exe -k netsvcs Ignore LocalSystem 0
System Event Notification SENS Running Manual Share Process
c:\windows\system32\svchost.exe -k netsvcs Normal LocalSystem 0
Internet Connection Firewall (ICF) / Internet Connection Sharing (ICS) SharedAccess
Stopped Disabled Share Process c:\windows\system32\svchost.exe -k
netsvcs Normal LocalSystem 0
Shell Hardware Detection ShellHWDetection Stopped Manual Share Process
c:\windows\system32\svchost.exe -k netsvcs Ignore LocalSystem 0
Print Spooler Spooler Stopped Manual Own Process
c:\windows\system32\spoolsv.exe Normal LocalSystem 0
SQLSERVERAGENT SQLSERVERAGENT Stopped Manual Own Process
c:\progra~1\micros~1\mssql\binn\sqlagent.exe Normal LocalSystem 0
Windows Image Acquisition (WIA) stisvc Stopped Disabled Share Process
c:\windows\system32\svchost.exe -k imgsvc Normal NT AUTHORITY\LocalService
0
Microsoft Software Shadow Copy Provider swprv Stopped Manual Own Process
c:\windows\system32\svchost.exe -k swprv Normal LocalSystem 0
Performance Logs and Alerts SysmonLog Stopped Manual Own Process
c:\windows\system32\smlogsvc.exe Normal NT Authority\NetworkService 0
Telephony TapiSrv Stopped Manual Share Process
c:\windows\system32\svchost.exe -k tapisrv Normal LocalSystem 0
Terminal Services TermService Running Manual Share Process
c:\windows\system32\svchost.exe -k termsvcs Normal LocalSystem 0
Themes Themes Stopped Disabled Share Process
c:\windows\system32\svchost.exe -k netsvcs Normal LocalSystem 0
Telnet TlntSvr Stopped Disabled Own Process c:\windows\system32\tlntsvr.exe
Normal NT AUTHORITY\LOCAL SERVICE 0
Distributed Link Tracking Server TrkSvr Stopped Manual Share Process
c:\windows\system32\svchost.exe -k netsvcs Normal LocalSystem 0

Copyright Dell

Distributed Link Tracking Client TrkWks Stopped Manual Share Process
c:\windows\system32\svchost.exe -k netsvcs Normal LocalSystem 0
Terminal Services Session Directory Tssdis Stopped Disabled Own Process
c:\windows\system32\tssdis.exe Normal LocalSystem 0
Upload Manager uploadmgr Stopped Disabled Share Process
c:\windows\system32\svchost.exe -k netsvcs Normal LocalSystem 0
Uninterruptible Power Supply UPS Stopped Manual Own Process
c:\windows\system32\ups.exe Normal NT AUTHORITY\LocalService 0
Virtual Disk Service vds Stopped Disabled Own Process
c:\windows\system32\vds.exe Normal LocalSystem 0
Volume Shadow Copy VSS Stopped Manual Own Process
c:\windows\system32\vssvc.exe Normal LocalSystem 0
Windows Time W32Time Stopped Manual Share Process
c:\windows\system32\svchost.exe -k netsvcs Normal LocalSystem 0
WebClient WebClient Stopped Disabled Share Process
c:\windows\system32\svchost.exe -k localservice Normal NT
AUTHORITY\LocalService 0
WinHTTP Web Proxy Auto-Discovery Service WinHttpAutoProxySvc Stopped Manual
Share Process c:\windows\system32\svchost.exe -k localservice Normal NT
AUTHORITY\LocalService 0
Windows Management Instrumentation winmgmt Running Auto Share Process
c:\windows\system32\svchost.exe -k netsvcs Ignore LocalSystem 0
Portable Media Serial Number WmdmPmSp Stopped Manual Share Process
c:\windows\system32\svchost.exe -k netsvcs Normal LocalSystem 0
Windows Management Instrumentation Driver Extensions Wmi Stopped Manual
Share Process c:\windows\system32\svchost.exe -k netsvcs Normal LocalSystem
0
WMI Performance Adapter WmiApSrv Stopped Manual Own Process
c:\windows\system32\wbem\wmiapsrv.exe Normal LocalSystem 0
Automatic Updates wuauserv Stopped Manual Share Process
c:\windows\system32\svchost.exe -k netsvcs Normal LocalSystem 0
Wireless Configuration WZCSVC Stopped Manual Share Process
c:\windows\system32\svchost.exe -k netsvcs Normal LocalSystem 0

[Program Groups]

Group Name Name User Name
Accessories Default User:Accessories Default User
Accessories\Accessibility Default User:Accessories\Accessibility Default User
Accessories\Entertainment Default User:Accessories\Entertainment Default User
Startup Default User:Startup Default User
Accessories All Users:Accessories All Users
Accessories\Accessibility All Users:Accessories\Accessibility All Users
Accessories\Communications All Users:Accessories\Communications All Users
Accessories\Entertainment All Users:Accessories\Entertainment All Users
Accessories\System Tools All Users:Accessories\System Tools All Users
Administrative Tools All Users:Administrative Tools All Users
Microsoft SQL Server All Users:Microsoft SQL Server All Users
Startup All Users:Startup All Users
WinZip All Users:WinZip All Users
Accessories NT AUTHORITY\SYSTEM:Accessories NT AUTHORITY\SYSTEM
Accessories\Accessibility NT AUTHORITY\SYSTEM:Accessories\Accessibility NT
AUTHORITY\SYSTEM
Accessories\Entertainment NT AUTHORITY\SYSTEM:Accessories\Entertainment NT
AUTHORITY\SYSTEM

Copyright Dell

Startup NT AUTHORITY\SYSTEM:Startup NT AUTHORITY\SYSTEM
Accessories PE6500\Administrator:Accessories PE6500\Administrator
Accessories\Accessibility PE6500\Administrator:Accessories\Accessibility
PE6500\Administrator
Accessories\Entertainment PE6500\Administrator:Accessories\Entertainment
PE6500\Administrator
Administrative Tools PE6500\Administrator:Administrative Tools PE6500\Administrator
QLogic Corporation PE6500\Administrator:QLogic Corporation PE6500\Administrator
QLogic Corporation\SANblade Control VIX PE6500\Administrator:QLogic
Corporation\SANblade Control VIX PE6500\Administrator
Startup PE6500\Administrator:Startup PE6500\Administrator

[Startup Programs]

Program Command User Name Location
desktop desktop.ini NT AUTHORITY\SYSTEM Startup
desktop desktop.ini PE6500\Administrator Startup
desktop desktop.ini .DEFAULT Startup
desktop desktop.ini All Users Common Startup
Service Manager c:\progra~1\micros~1\80\tools\binn\sqlmangr.exe /n All Users
Common Startup
KernelFaultCheck %systemroot%\system32\dumprep 0 -k All Users
HKLM\SOFTWARE\Microsoft\Windows\CurrentVersion\Run

[OLE Registration]

Object Local Server
Sound (OLE2) sndrec32.exe
Media Clip mplay32.exe
Video Clip mplay32.exe /avi
MIDI Sequence mplay32.exe /mid
Sound Not Available
Media Clip Not Available
Windows Media Player 7 Not Available
WordPad Document "%programfiles%\windows nt\accessories\wordpad.exe"
Windows Media Services DRM Storage object Not Available
Bitmap Image mspaint.exe

[Windows Error Reporting]

Time Type Details

[Internet Settings]

[Internet Explorer]

[Following are sub-categories of this main category]
[Summary]

Item Value
Version 6.0.3663.0
Build 63663
Application Path C:\Program Files\Internet Explorer

Copyright Dell

Language English (United States)
Active Printer Not Available

Cipher Strength 128-bit
Content Advisor Disabled
IEAK Install No

[File Versions]

File Version Size Date Path Company
actxprxy.dll 6.0.3663.0 95 KB 7/29/2002 1:08:47 PM C:\WINDOWS\system32 Microsoft Corporation
actxprxy.dll 6.0.3663.0 95 KB 7/29/2002 1:08:47 PM . Microsoft Corporation
advpack.dll 6.0.3663.0 93 KB 7/29/2002 1:09:03 PM C:\WINDOWS\system32 Microsoft Corporation
advpack.dll 6.0.3663.0 93 KB 7/29/2002 1:09:03 PM . Microsoft Corporation
asctrls.ocx 6.0.3663.0 89 KB 7/29/2002 1:09:36 PM C:\WINDOWS\system32 Microsoft Corporation
asctrls.ocx 6.0.3663.0 89 KB 7/29/2002 1:09:36 PM . Microsoft Corporation
browselc.dll 6.0.3663.0 62 KB 7/29/2002 1:10:34 PM C:\WINDOWS\system32 Microsoft Corporation
browselc.dll 6.0.3663.0 62 KB 7/29/2002 1:10:34 PM . Microsoft Corporation
browseui.dll 6.0.3663.0 1,000 KB 7/29/2002 1:10:35 PM C:\WINDOWS\system32 Microsoft Corporation
browseui.dll 6.0.3663.0 1,000 KB 7/29/2002 1:10:35 PM . Microsoft Corporation
cdfview.dll 6.0.3663.0 141 KB 7/29/2002 1:10:50 PM C:\WINDOWS\system32 Microsoft Corporation
cdfview.dll 6.0.3663.0 141 KB 7/29/2002 1:10:50 PM . Microsoft Corporation
comctl32.dll 5.82.3663.0 560 KB 7/29/2002 1:11:51 PM C:\WINDOWS\system32 Microsoft Corporation
comctl32.dll 5.82.3663.0 560 KB 7/29/2002 1:11:51 PM . Microsoft Corporation
dxtrans.dll 6.3.3663.0 188 KB 7/29/2002 1:17:50 PM C:\WINDOWS\system32 Microsoft Corporation
dxtrans.dll 6.3.3663.0 188 KB 7/29/2002 1:17:50 PM . Microsoft Corporation
dxtmsft.dll 6.3.3663.0 332 KB 7/29/2002 1:17:49 PM C:\WINDOWS\system32 Microsoft Corporation
dxtmsft.dll 6.3.3663.0 332 KB 7/29/2002 1:17:49 PM . Microsoft Corporation
iecont.dll <File Missing> Not Available Not Available Not Available Not Available
iecontlc.dll <File Missing> Not Available Not Available Not Available Not Available
iedkcs32.dll 16.0.3663.0 292 KB 7/29/2002 1:22:03 PM C:\WINDOWS\system32 Microsoft Corporation
iedkcs32.dll 16.0.3663.0 292 KB 7/29/2002 1:22:03 PM . Microsoft Corporation
iepeers.dll 6.0.3663.0 229 KB 7/29/2002 1:22:08 PM C:\WINDOWS\system32 Microsoft Corporation
iepeers.dll 6.0.3663.0 229 KB 7/29/2002 1:22:08 PM . Microsoft Corporation
iesetup.dll 6.0.3663.0 59 KB 7/29/2002 1:22:09 PM C:\WINDOWS\system32 Microsoft Corporation
iesetup.dll 6.0.3663.0 59 KB 7/29/2002 1:22:09 PM . Microsoft Corporation
ieuinit.inf Not Available 19 KB 7/29/2002 1:22:11 PM C:\WINDOWS\system32 Not Available
ieuinit.inf Not Available 19 KB 7/29/2002 1:22:11 PM . Not Available
iexplore.exe 6.0.3663.0 90 KB 7/29/2002 1:22:12 PM C:\Program Files\Internet Explorer Microsoft Corporation

Copyright Dell

imgutil.dll 6.0.3663.0 30 KB 7/29/2002 1:22:31 PM C:\WINDOWS\system32 Microsoft Corporation
imgutil.dll 6.0.3663.0 30 KB 7/29/2002 1:22:31 PM . Microsoft Corporation
inetcpl.cpl 6.0.3663.0 296 KB 7/29/2002 1:22:35 PM C:\WINDOWS\system32 Microsoft Corporation
inetcpl.cpl 6.0.3663.0 296 KB 7/29/2002 1:22:35 PM . Microsoft Corporation
inetcplc.dll 6.0.3663.0 108 KB 7/29/2002 1:22:35 PM C:\WINDOWS\system32 Microsoft Corporation
inetcplc.dll 6.0.3663.0 108 KB 7/29/2002 1:22:35 PM . Microsoft Corporation
inseng.dll 6.0.3663.0 71 KB 7/29/2002 1:22:48 PM C:\WINDOWS\system32 Microsoft Corporation
inseng.dll 6.0.3663.0 71 KB 7/29/2002 1:22:48 PM . Microsoft Corporation
mlang.dll 6.0.3663.0 565 KB 7/29/2002 1:29:34 PM C:\WINDOWS\system32 Microsoft Corporation
mlang.dll 6.0.3663.0 565 KB 7/29/2002 1:29:34 PM . Microsoft Corporation
msencode.dll 2000.7.25.0 92 KB 7/29/2002 1:31:53 PM C:\WINDOWS\system32 Not Available
msencode.dll 2000.7.25.0 92 KB 7/29/2002 1:31:53 PM . Not Available
mshta.exe 6.0.3663.0 27 KB 7/29/2002 1:32:11 PM C:\WINDOWS\system32 Microsoft Corporation
mshta.exe 6.0.3663.0 27 KB 7/29/2002 1:32:11 PM . Microsoft Corporation
mshtml.dll 6.0.3663.0 2,628 KB 7/29/2002 1:32:12 PM C:\WINDOWS\system32 Microsoft Corporation
mshtml.dll 6.0.3663.0 2,628 KB 7/29/2002 1:32:12 PM . Microsoft Corporation
mshtml.tlb 6.0.3663.0 1,319 KB 7/29/2002 1:32:13 PM C:\WINDOWS\system32 Microsoft Corporation
mshtml.tlb 6.0.3663.0 1,319 KB 7/29/2002 1:32:13 PM . Microsoft Corporation
mshtmled.dll 6.0.3663.0 424 KB 7/29/2002 1:32:13 PM C:\WINDOWS\system32 Microsoft Corporation
mshtmled.dll 6.0.3663.0 424 KB 7/29/2002 1:32:13 PM . Microsoft Corporation
mshtmler.dll 6.0.3663.0 55 KB 7/29/2002 1:32:14 PM C:\WINDOWS\system32 Microsoft Corporation
mshtmler.dll 6.0.3663.0 55 KB 7/29/2002 1:32:14 PM . Microsoft Corporation
msident.dll 6.0.3663.0 47 KB 7/29/2002 1:32:16 PM C:\WINDOWS\system32 Microsoft Corporation
msident.dll 6.0.3663.0 47 KB 7/29/2002 1:32:16 PM . Microsoft Corporation
msidntld.dll 6.0.3663.0 15 KB 7/29/2002 1:32:17 PM C:\WINDOWS\system32 Microsoft Corporation
msidntld.dll 6.0.3663.0 15 KB 7/29/2002 1:32:17 PM . Microsoft Corporation
msieftp.dll 6.0.3663.0 232 KB 7/29/2002 1:32:17 PM C:\WINDOWS\system32 Microsoft Corporation
msieftp.dll 6.0.3663.0 232 KB 7/29/2002 1:32:17 PM . Microsoft Corporation
msrating.dll 6.0.3663.0 132 KB 7/29/2002 1:33:02 PM C:\WINDOWS\system32 Microsoft Corporation
msrating.dll 6.0.3663.0 132 KB 7/29/2002 1:33:02 PM . Microsoft Corporation
mstime.dll 6.0.3663.0 490 KB 7/29/2002 1:33:14 PM C:\WINDOWS\system32 Microsoft Corporation
mstime.dll 6.0.3663.0 490 KB 7/29/2002 1:33:14 PM . Microsoft Corporation
occache.dll 6.0.3663.0 88 KB 7/29/2002 1:36:56 PM C:\WINDOWS\system32 Microsoft Corporation
occache.dll 6.0.3663.0 88 KB 7/29/2002 1:36:56 PM . Microsoft Corporation
proctexe.ocx 6.3.3663.0 78 KB 7/29/2002 1:50:00 PM C:\WINDOWS\system32 Intel Corporation

Copyright Dell

proctexe.ocx 6.3.3663.0 78 KB 7/29/2002 1:50:00 PM . Intel Corporation
sendmail.dll 6.0.3663.0 54 KB 7/29/2002 1:55:07 PM C:\WINDOWS\system32
Microsoft Corporation
sendmail.dll 6.0.3663.0 54 KB 7/29/2002 1:55:07 PM . Microsoft Corporation
shdoclc.dll 6.0.3663.0 521 KB 7/29/2002 1:55:57 PM C:\WINDOWS\system32
Microsoft Corporation
shdoclc.dll 6.0.3663.0 521 KB 7/29/2002 1:55:57 PM . Microsoft Corporation
shdocvw.dll 6.0.3663.0 1,311 KB 7/29/2002 1:55:57 PM
C:\WINDOWS\system32 Microsoft Corporation
shdocvw.dll 6.0.3663.0 1,311 KB 7/29/2002 1:55:57 PM . Microsoft
Corporation
shfolder.dll 6.0.3663.0 23 KB 7/29/2002 1:56:01 PM C:\WINDOWS\system32
Microsoft Corporation
shfolder.dll 6.0.3663.0 23 KB 7/29/2002 1:56:01 PM . Microsoft Corporation
shlwapi.dll 6.0.3663.0 269 KB 7/29/2002 1:56:04 PM C:\WINDOWS\system32
Microsoft Corporation
shlwapi.dll 6.0.3663.0 269 KB 7/29/2002 1:56:04 PM . Microsoft Corporation
tdc.ocx 1.3.0.3130 57 KB 7/29/2002 1:59:22 PM C:\WINDOWS\system32
Microsoft Corporation
tdc.ocx 1.3.0.3130 57 KB 7/29/2002 1:59:22 PM . Microsoft Corporation
url.dll 6.0.3663.0 40 KB 7/29/2002 2:01:36 PM C:\WINDOWS\system32
Microsoft Corporation
url.dll 6.0.3663.0 40 KB 7/29/2002 2:01:36 PM . Microsoft Corporation
urlmon.dll 6.0.3663.0 442 KB 7/29/2002 2:01:37 PM C:\WINDOWS\system32
Microsoft Corporation
urlmon.dll 6.0.3663.0 442 KB 7/29/2002 2:01:37 PM . Microsoft Corporation
webcheck.dll 6.0.3663.0 254 KB 7/29/2002 2:04:06 PM C:\WINDOWS\system32
Microsoft Corporation
webcheck.dll 6.0.3663.0 254 KB 7/29/2002 2:04:06 PM . Microsoft Corporation
wininet.dll 6.0.3663.0 581 KB 7/29/2002 2:04:46 PM C:\WINDOWS\system32
Microsoft Corporation
wininet.dll 6.0.3663.0 581 KB 7/29/2002 2:04:46 PM . Microsoft Corporation

[Connectivity]

Item Value
Connection Preference Never dial

LAN Settings

AutoConfigProxy Not Available
AutoProxyDetectMode Disabled
AutoConfigURL
Proxy Disabled
ProxyServer
ProxyOverride

[Cache]

[Following are sub-categories of this main category]
[Summary]

Item Value
Page Refresh Type Automatic

Copyright Dell

Temporary Internet Files Folder C:\Documents and Settings\Administrator.PE6500\Local Settings\Temporary Internet Files
Total Disk Space Not Available
Available Disk Space Not Available
Maximum Cache Size Not Available
Available Cache Size Not Available

[List of Objects]

Program File Status CodeBase
No cached object information available

[Content]

[Following are sub-categories of this main category]
[Summary]

Item Value
Content Advisor Disabled

[Personal Certificates]

Issued To Issued By Validity Signature Algorithm
No personal certificate information available

[Other People Certificates]

Issued To Issued By Validity Signature Algorithm
No other people certificate information available

[Publishers]

Name
No publisher information available

[Security]

Zone Security Level
My Computer Custom
Local intranet Medium-low
Trusted sites Low
Internet Medium
Restricted sites High

Client Configuration Parameters

COM+ Settings

TPCC.AllTxns:
Activation:
Enable Object Pooling selected
Minimum Pool Size: 110

Copyright Dell

Maximum Pool Size: 110
Creation Timeout: 60,000
Enable Object Construction
Enable Just in Time Activation
Concurrency:
Concurrency Required

TPCC Application Registry Parameters

```
Windows Registry Editor Version 5.00

[HKEY_LOCAL_MACHINE\SOFTWARE\Microsoft\TPCC]
"Path"="c:\\inetpub\\wwwroot\\"
"NumberOfDeliveryThreads"=dword:00000013
"MaxConnections"=dword:00002ee0
"MaxPendingDeliveries"=dword:000005dc
"DB_Protocol"="DBLIB"
"TxnMonitor"="COM"
"DbServer"="pe6500"
"DbName"="tpcc"
"DbUser"="sa"
"DbPassword"=""
"COM_SinglePool"="YES"
```

Microsoft Internet Information Server Registry Parameters

```
[HKEY_LOCAL_MACHINE\SYSTEM\CurrentControlSet\Services\InetInfo]

[HKEY_LOCAL_MACHINE\SYSTEM\CurrentControlSet\Services\InetInfo\Parameters]
"ListenBackLog"=dword:00000019
"DispatchEntries"=hex(7):4c,00,44,00,41,00,50,00,53,00,56,00,43,00,00,00,00,00
"PoolThreadLimit"=dword:000000be
"ThreadTimeout"=dword:00015180

[HKEY_LOCAL_MACHINE\SYSTEM\CurrentControlSet\Services\InetInfo\Performance]
"Library"="infoctrs.dll"
"Open"="OpenINFOPerformanceData"
"Close"="CloseINFOPerformanceData"
"Collect"="CollectINFOPerformanceData"
"Last Counter"=dword:00000842
"Last Help"=dword:00000843
"First Counter"=dword:00000802
"First Help"=dword:00000803
"Library Validation Code"=hex:de,fc,ed,18,0a,98,c0,01,10,25,00,00,00,00,00,00
"WbemAdapFileTime"=hex:00,60,4e,96,aa,40,bf,01
"WbemAdapFileSize"=dword:00002510
"WbemAdapStatus"=dword:00000000
```

World Wide Web Service Registry Parameters

```
Windows Registry Editor Version 5.00

[HKEY_LOCAL_MACHINE\SYSTEM\CurrentControlSet\Services\W3SVC]
"Type"=dword:00000020
"Start"=dword:00000002
"ErrorControl"=dword:00000001
"ImagePath"=hex(2):43,00,3a,00,5c,00,57,00,49,00,4e,00,4e,00,54,00,5c,00,53,00,\
  79,00,73,00,74,00,65,00,6d,00,33,00,32,00,5c,00,69,00,6e,00,65,00,74,00,73,\
  00,72,00,76,00,5c,00,69,00,6e,00,65,00,74,00,69,00,6e,00,66,00,6f,00,2e,00,\
  65,00,78,00,65,00,00,00
```


Copyright Dell

```
"DisplayName"="World Wide Web Publishing Service"
"DependOnService"=hex(7):49,00,49,00,53,00,41,00,44,00,4d,00,49,00,4e,00,00,00,\
  00,00
"DependOnGroup"=hex(7):00,00
"ObjectName"="LocalSystem"
"Description"="Provides Web connectivity and administration through the Internet Information
Services snap-in."

[HKEY_LOCAL_MACHINE\SYSTEM\CurrentControlSet\Services\W3SVC\ASP]
"NOTE"="This is for backward compatibility only."

[HKEY_LOCAL_MACHINE\SYSTEM\CurrentControlSet\Services\W3SVC\ASP\Parameters]

[HKEY_LOCAL_MACHINE\SYSTEM\CurrentControlSet\Services\W3SVC\Parameters]
"MajorVersion"=dword:00000005
"MinorVersion"=dword:00000000
"InstallPath"="C:\\WINNT\\System32\\inetsrv"
"CertMapList"="C:\\WINNT\\System32\\inetsrv\\iiscrmap.dll"
"AccessDeniedMessage"="Error: Access is Denied."
"Filter DLLs"=""
"LogFileDirectory"="C:\\WINNT\\System32\\LogFiles"
"AcceptExOutstanding"=dword:00000028

[HKEY_LOCAL_MACHINE\SYSTEM\CurrentControlSet\Services\W3SVC\Parameters\ADCLaun
ch]

[HKEY_LOCAL_MACHINE\SYSTEM\CurrentControlSet\Services\W3SVC\Parameters\ADCLaun
ch\AdvancedDataFactory]

[HKEY_LOCAL_MACHINE\SYSTEM\CurrentControlSet\Services\W3SVC\Parameters\ADCLaun
ch\RDSServer.DataFactory]

[HKEY_LOCAL_MACHINE\SYSTEM\CurrentControlSet\Services\W3SVC\Parameters\Script
Map]

[HKEY_LOCAL_MACHINE\SYSTEM\CurrentControlSet\Services\W3SVC\Parameters\Virtual
Roots]
"/"="c:\\inetpub\\wwwroot,,205"
"/Scripts"="c:\\inetpub\\scripts,,204"
"/IISHelp"="c:\\winnt\\help\\iishelp,,201"
"/IISAdmin"="C:\\WINNT\\System32\\inetsrv\\iisadmin,,201"
"/IISSamples"="c:\\inetpub\\iissamples,,201"
"/MSADC"="c:\\program files\\common files\\system\\msadc,,205"
"/_vti_bin"="C:\\Program Files\\Common Files\\Microsoft Shared\\Web Server
Extensions\\40\\isapi,,205"
"/Rpc"="C:\\WINNT\\System32\\RpcProxy,,4"
"/Printers"="C:\\WINNT\\web\\printers,,201"

[HKEY_LOCAL_MACHINE\SYSTEM\CurrentControlSet\Services\W3SVC\Performance]
"Library"="w3ctrs.dll"
"Open"="OpenW3PerformanceData"
"Close"="CloseW3PerformanceData"
"Collect"="CollectW3PerformanceData"
"Last Counter"=dword:000008e6
"Last Help"=dword:000008e7
```


Copyright Dell

```
"First Counter"=dword:00000844
"First Help"=dword:00000845
"Library Validation Code"=hex:86,2b,a6,1b,0a,98,c0,01,10,3d,00,00,00,00,00,00
"WbemAdapFileTime"=hex:00,60,4e,96,aa,40,bf,01
"WbemAdapFileSize"=dword:00003d10
"WbemAdapStatus"=dword:00000000

[HKEY_LOCAL_MACHINE\SYSTEM\CurrentControlSet\Services\W3SVC\Security]
"Security"=hex:01,00,14,80,a0,00,00,00,ac,00,00,00,14,00,00,00,30,00,00,00,02,\
  00,1c,00,01,00,00,00,02,80,14,00,ff,01,0f,00,01,01,00,00,00,00,00,01,00,00,\
  00,00,02,00,70,00,04,00,00,00,00,00,18,00,fd,01,02,00,01,01,00,00,00,00,00,\
  05,12,00,00,00,74,00,6f,00,00,00,1c,00,ff,01,0f,00,01,02,00,00,00,00,00,05,\
  20,00,00,00,20,02,00,00,72,00,73,00,00,00,18,00,8d,01,02,00,01,01,00,00,00,\
  00,00,05,0b,00,00,00,20,02,00,00,00,00,1c,00,fd,01,02,00,01,02,00,00,00,00,\
  00,05,20,00,00,00,23,02,00,00,72,00,73,00,01,01,00,00,00,00,00,05,12,00,00,\
  00,01,01,00,00,00,00,00,05,12,00,00,00

[HKEY_LOCAL_MACHINE\SYSTEM\CurrentControlSet\Services\W3SVC\Enum]
"0"="Root\\LEGACY_W3SVC\\0000"
"Count"=dword:00000001
"NextInstance"=dword:00000001
```

Microsoft Windows 2000 Server System Information Report for PE1500

```
System Information report written at: 05/20/2003 11:15:25 AM
[System Information]

[ Following are sub-categories of this main category ]

[System Summary]

Item  Value
OS Name     Microsoft Windows 2000 Server
Version     5.0.2195 Service Pack 1 Build 2195
OS Manufacturer   Microsoft Corporation
System Name CLIENT1
System Manufacturer     Dell Computer Corporation
System Model      PowerEdge 1500SC
System Type X86-based PC
Processor   x86 Family 6 Model 11 Stepping 1 GenuineIntel ~1130 Mhz
BIOS Version      Phoenix ROM BIOS PLUS Version 1.10 A02
Windows Directory C:\WINNT
System Directory  C:\WINNT\System32
Boot Device \Device\Harddisk0\Partition1
Locale      United States
User Name   CLIENT1\Administrator
Time Zone   Central Daylight Time
Total Physical Memory   523,764 KB
Available Physical Memory     301,112 KB
Total Virtual Memory    1,801,580 KB
Available Virtual Memory      1,378,024 KB
Page File Space   1,277,816 KB
Page File   C:\pagefile.sys
```


Copyright Dell

```
[Hardware Resources]

[ Following are sub-categories of this main category ]

[Conflicts/Sharing]

Resource    Device
IRQ 11      Standard OpenHCD USB Host Controller
IRQ 11      PCI standard host CPU bridge

[DMA]

Channel     Device      Status
4     Direct memory access controller     OK
2     Standard floppy disk controller     OK

[Forced Hardware]

Device      PNP Device ID
No Forced Hardware

[I/O]

Address Range     Device      Status
0x0000-0x03AF     PCI bus     OK
0x0000-0x03AF     Direct memory access controller     OK
0x03B0-0x03DF     PCI bus     OK
0x03B0-0x03DF     ATI Technologies Inc. RAGE XL PCI   OK
0x03E0-0x0FFF     PCI bus     OK
0xE000-0xEFFF     PCI bus     OK
0xECC0-0xECFF     Intel(R) PRO/100 S Server Adapter   OK
0xEC80-0xECBF     Intel(R) PRO/100 S Server Adapter #2      OK
0xE800-0xE8FF     ATI Technologies Inc. RAGE XL PCI   OK
0x03C0-0x03DF     ATI Technologies Inc. RAGE XL PCI   OK
0x0A79-0x0A79     ISAPNP Read Data Port   OK
0x0279-0x0279     ISAPNP Read Data Port   OK
0x02F4-0x02F7     ISAPNP Read Data Port   OK
0x0080-0x009F     Direct memory access controller     OK
0x00C0-0x00DF     Direct memory access controller     OK
0x00F0-0x00FF     Numeric data processor  OK
0x0020-0x003F     Programmable interrupt controller   OK
0x00A0-0x00BF     Programmable interrupt controller   OK
0x04D0-0x04D1     Programmable interrupt controller   OK
0x0061-0x0061     System speaker    OK
0x0040-0x005F     System timer      OK
0x03F0-0x03F5     Standard floppy disk controller     OK
0x03F7-0x03F7     Standard floppy disk controller     OK
0x0060-0x0060     Standard 101/102-Key or Microsoft Natural PS/2
Keyboard    OK
0x0064-0x0064     Standard 101/102-Key or Microsoft Natural PS/2
Keyboard    OK
0x03F8-0x03FF     Communications Port (COM1)    OK
0x0378-0x037F     ECP Printer Port (LPT1) OK
0x0778-0x077F     ECP Printer Port (LPT1) OK
0x0070-0x007F     System CMOS/real time clock   OK
```


Copyright Dell

```
0x0814-0x085B     System board      OK
0x0820-0x083F     System board      OK
0x0580-0x058F     System board      OK
0x0C00-0x0CD7     System board      OK
0x0F50-0x0F58     System board      OK
0x00E0-0x00EF     System board      OK
0x08B0-0x08BF     Standard Dual Channel PCI IDE Controller  OK
0x08C0-0x08C3     Standard Dual Channel PCI IDE Controller  OK
0x01F0-0x01F7     Primary IDE Channel     OK
0x03F6-0x03F6     Primary IDE Channel     OK
0x0170-0x0177     Secondary IDE Channel   OK
0x0376-0x0376     Secondary IDE Channel   OK
0xD000-0xDFFF     PCI bus     OK
0xDC00-0xDCFF     Adaptec AIC-7899 Ultra160/m PCI SCSI Card OK
0xD800-0xD8FF     Adaptec AIC-7899 Ultra160/m PCI SCSI Card OK
0xD400-0xD4FF     QLogic QLA23xx PCI Fibre Channel Adapter  OK
0xC000-0xCFFF     PCI bus     OK

[IRQs]

IRQ Number  Device
9     Microsoft ACPI-Compliant System
17    Intel(R) PRO/100 S Server Adapter
20    Intel(R) PRO/100 S Server Adapter #2
13    Numeric data processor
6     Standard floppy disk controller
1     Standard 101/102-Key or Microsoft Natural PS/2 Keyboard
12    PS/2 Compatible Mouse
4     Communications Port (COM1)
8     System CMOS/real time clock
14    Primary IDE Channel
11    Standard OpenHCD USB Host Controller
11    PCI standard host CPU bridge
29    Adaptec AIC-7899 Ultra160/m PCI SCSI Card
30    Adaptec AIC-7899 Ultra160/m PCI SCSI Card
28    QLogic QLA23xx PCI Fibre Channel Adapter

[Memory]

Range Device      Status
0xA0000-0xBFFFF   PCI bus     OK
0xA0000-0xBFFFF   ATI Technologies Inc. RAGE XL PCI   OK
0xD0000-0xE7FFF   PCI bus     OK
0xFD000000-0xFE1FFFFF   PCI bus     OK
0xFD000000-0xFE1FFFFF   ATI Technologies Inc. RAGE XL PCI   OK
0xFE143000-0xFE143FFF   Intel(R) PRO/100 S Server Adapter   OK
0xFE120000-0xFE13FFFF   Intel(R) PRO/100 S Server Adapter   OK
0xFE142000-0xFE142FFF   Intel(R) PRO/100 S Server Adapter #2      OK
0xFE100000-0xFE11FFFF   Intel(R) PRO/100 S Server Adapter #2      OK
0xFE141000-0xFE141FFF   ATI Technologies Inc. RAGE XL PCI   OK
0xFE140000-0xFE140FFF   Standard OpenHCD USB Host Controller      OK
0xFEA00000-0xFEBFFFFF   PCI bus     OK
0xFEB02000-0xFEB02FFF   Adaptec AIC-7899 Ultra160/m PCI SCSI Card OK
0xFEB01000-0xFEB01FFF   Adaptec AIC-7899 Ultra160/m PCI SCSI Card OK
0xFEB00000-0xFEB00FFF   QLogic QLA23xx PCI Fibre Channel Adapter  OK
```


Copyright Dell

```
0xFE800000-0xFE9FFFFF   PCI bus     OK
0x0000-0x9FFFF    System board      OK
0x100000-0x1FFFFFFF     System board      OK
0xF0000-0xFFFFF   System board      OK
0xFEC00000-0xFEC0FFFF   System board      OK
0xFEE00000-0xFEE0FFFF   System board      OK
0xFFE00000-0xFFFFFFFF   System board      OK

[Components]

[ Following are sub-categories of this main category ]

[Multimedia]

[ Following are sub-categories of this main category ]

[Audio Codecs]

Codec Manufacturer      Description Status      File  Version     Size
      Creation Date
c:\winnt\system32\iac25_32.ax Intel Corporation Indeo® audio software
      OK    C:\WINNT\System32\IAC25_32.AX 2.05.53     195.00 KB
(199,680 bytes)   7/26/2000 7:00:00 AM
c:\winnt\system32\msg723.acm  Microsoft Corporation         OK
      C:\WINNT\System32\MSG723.ACM  4.4.3385    106.77 KB (109,328
bytes)      3/29/2002 12:38:55 PM
c:\winnt\system32\lhacm.acm   Microsoft Corporation         OK
      C:\WINNT\System32\LHACM.ACM   4.4.3385    33.27 KB (34,064 bytes)
      3/29/2002 12:38:55 PM
c:\winnt\system32\tssoft32.acm      DSP GROUP, INC.         OK
      C:\WINNT\System32\TSSOFT32.ACM      1.01  9.27 KB (9,488 bytes)
      7/26/2000 7:00:00 AM
c:\winnt\system32\msgsm32.acm Microsoft Corporation         OK
      C:\WINNT\System32\MSGSM32.ACM 5.00.2134.1 22.27 KB (22,800 bytes)
      7/26/2000 7:00:00 AM
c:\winnt\system32\msg711.acm  Microsoft Corporation         OK
      C:\WINNT\System32\MSG711.ACM  5.00.2134.1 10.27 KB (10,512 bytes)
      7/26/2000 7:00:00 AM
c:\winnt\system32\msadp32.acm Microsoft Corporation         OK
      C:\WINNT\System32\MSADP32.ACM 5.00.2134.1 14.77 KB (15,120 bytes)
      7/26/2000 7:00:00 AM
c:\winnt\system32\imaadp32.acm      Microsoft Corporation         OK
      C:\WINNT\System32\IMAADP32.ACM      5.00.2134.1 16.27 KB (16,656
bytes)      7/26/2000 7:00:00 AM

[Video Codecs]

Codec Manufacturer      Description Status      File  Version     Size
      Creation Date
c:\winnt\system32\ir50_32.dll Intel Corporation Indeo® video 5.10 OK
      C:\WINNT\System32\IR50_32.DLL R.5.10.15.2.55    737.50 KB
(755,200 bytes)   7/26/2000 7:00:00 AM
c:\winnt\system32\msh261.drv  Microsoft Corporation         OK
      C:\WINNT\System32\MSH261.DRV  4.4.3385    163.77 KB (167,696
bytes)      3/29/2002 12:38:55 PM
```


Copyright Dell

```
c:\winnt\system32\msh263.drv  Microsoft Corporation         OK
      C:\WINNT\System32\MSH263.DRV  4.4.3385    252.27 KB (258,320
bytes)      3/29/2002 12:38:34 PM
c:\winnt\system32\msvidc32.dll      Microsoft Corporation         OK
      C:\WINNT\System32\MSVIDC32.DLL      5.00.2134.1 27.27 KB (27,920
bytes)      7/26/2000 7:00:00 AM
c:\winnt\system32\msrle32.dll Microsoft Corporation         OK
      C:\WINNT\System32\MSRLE32.DLL 5.00.2134.1 10.77 KB (11,024 bytes)
      7/26/2000 7:00:00 AM
c:\winnt\system32\ir32_32.dll Intel(R) Corporation          OK
      C:\WINNT\System32\IR32_32.DLL Not Available     194.50 KB
(199,168 bytes)   7/26/2000 7:00:00 AM
c:\winnt\system32\iccvid.dll  Radius Inc.       OK
      C:\WINNT\System32\ICCVID.DLL  1.10.0.6    108.00 KB (110,592
bytes)      7/26/2000 7:00:00 AM

[CD-ROM]

Item  Value
Drive D:
Description CD-ROM Drive
Media Loaded      False
Media Type  CD-ROM
Name  LG CD-ROM CRD-8482B
Manufacturer      (Standard CD-ROM drives)
Status      OK
Transfer Rate     Not Available
SCSI Target ID    0
PNP Device ID     IDE\CDROMLG_CD-ROM_CRD-
8482B_____________________1.05____\5&129881D0&0&0.0.0


[Sound Device]

Item  Value
No sound devices

[Display]

Item  Value
Name  ATI Technologies Inc. RAGE XL PCI
PNP Device ID
      PCI\VEN_1002&DEV_4752&SUBSYS_011C1028&REV_27\3&13C0B0C5&0&70
Adapter Type      ATI RAGE XL PCI, ATI Technologies Inc. compatible
Adapter Description     ATI Technologies Inc. RAGE XL PCI
Adapter RAM 4.00 MB (4,194,304 bytes)
Installed Drivers atidrab.dll
Driver Version    5.00.2179.1
INF File    display.inf (atirage3 section)
Color Planes      1
Color Table Entries     256
Resolution  1024 x 768 x 60 hertz
Bits/Pixel  8
```


Copyright Dell

```
[Infrared]

Item  Value
No infrared devices

[Input]

[ Following are sub-categories of this main category ]

[Keyboard]

Item  Value
Description Standard 101/102-Key or Microsoft Natural PS/2 Keyboard
Name  Enhanced (101- or 102-key)
Layout      00000409
PNP Device ID     ACPI\PNP0303\4&639D4DC&0
NumberOfFunctionKeys    12


[Pointing Device]

Item  Value
Hardware Type     PS/2 Compatible Mouse
Number of Buttons 3
Status      OK
PNP Device ID     ACPI\PNP0F13\4&639D4DC&0
Power Management Supported    False
Double Click Threshold  6
Handedness  Right Handed Operation


[Modem]

Item  Value
No modems

[Network]

[ Following are sub-categories of this main category ]

[Adapter]

Item  Value
Name  [00000000] RAS Async Adapter
Adapter Type      Not Available
Product Name      RAS Async Adapter
Installed   True
PNP Device ID     Not Available
Last Reset  5/16/2003 5:19:06 AM
Index 0
Service Name      AsyncMac
IP Address  Not Available
IP Subnet   Not Available
Default IP Gateway      Not Available
DHCP Enabled      False
```


Copyright Dell

```
DHCP Server Not Available
DHCP Lease Expires      Not Available
DHCP Lease Obtained     Not Available
MAC Address Not Available
Service Name      Not Available

Name  [00000001] WAN Miniport (L2TP)
Adapter Type      Not Available
Product Name      WAN Miniport (L2TP)
Installed   True
PNP Device ID     ROOT\MS_L2TPMINIPORT\0000
Last Reset  5/16/2003 5:19:06 AM
Index 1
Service Name      Rasl2tp
IP Address  Not Available
IP Subnet   Not Available
Default IP Gateway      Not Available
DHCP Enabled      False
DHCP Server Not Available
DHCP Lease Expires      Not Available
DHCP Lease Obtained     Not Available
MAC Address Not Available
Service Name      Rasl2tp
Driver      c:\winnt\system32\drivers\rasl2tp.sys (50800, 5.00.2179.1)

Name  [00000002] WAN Miniport (PPTP)
Adapter Type      Wide Area Network (WAN)
Product Name      WAN Miniport (PPTP)
Installed   True
PNP Device ID     ROOT\MS_PPTPMINIPORT\0000
Last Reset  5/16/2003 5:19:06 AM
Index 2
Service Name      PptpMiniport
IP Address  Not Available
IP Subnet   Not Available
Default IP Gateway      Not Available
DHCP Enabled      False
DHCP Server Not Available
DHCP Lease Expires      Not Available
DHCP Lease Obtained     Not Available
MAC Address 50:50:54:50:30:30
Service Name      PptpMiniport
Driver      c:\winnt\system32\drivers\raspptp.sys (47856, 5.00.2160.1)

Name  [00000003] Direct Parallel
Adapter Type      Not Available
Product Name      Direct Parallel
Installed   True
PNP Device ID     ROOT\MS_PTIMINIPORT\0000
Last Reset  5/16/2003 5:19:06 AM
Index 3
Service Name      Raspti
IP Address  Not Available
IP Subnet   Not Available
Default IP Gateway      Not Available
```


Copyright Dell

```
DHCP Enabled      False
DHCP Server Not Available
DHCP Lease Expires      Not Available
DHCP Lease Obtained     Not Available
MAC Address Not Available
Service Name      Raspti
Driver      c:\winnt\system32\drivers\raspti.sys (16880, 5.00.2146.1)

Name  [00000004] WAN Miniport (IP)
Adapter Type      Not Available
Product Name      WAN Miniport (IP)
Installed   True
PNP Device ID     ROOT\MS_NDISWANIP\0000
Last Reset  5/16/2003 5:19:06 AM
Index 4
Service Name      NdisWan
IP Address  Not Available
IP Subnet   Not Available
Default IP Gateway      Not Available
DHCP Enabled      False
DHCP Server Not Available
DHCP Lease Expires      Not Available
DHCP Lease Obtained     Not Available
MAC Address Not Available
Service Name      NdisWan
Driver      c:\winnt\system32\drivers\ndiswan.sys (90768, 5.00.2184.1)

Name  [00000005] Intel 82544EI-based XT Gigabit Adapter
Adapter Type      Not Available
Product Name      Intel 82544EI-based XT Gigabit Adapter
Installed   True
PNP Device ID
      PCI\VEN_8086&DEV_1008&SUBSYS_011C1028&REV_02\3&29E81982&0&10
Last Reset  5/16/2003 5:19:06 AM
Index 5
Service Name      E1000
IP Address  Not Available
IP Subnet   Not Available
Default IP Gateway      Not Available
DHCP Enabled      True
DHCP Server Not Available
DHCP Lease Expires      Not Available
DHCP Lease Obtained     Not Available
MAC Address Not Available
Service Name      E1000
Driver      c:\winnt\system32\drivers\e1000nt5.sys (73696,
3.40.340.0000)

Name  [00000006] Intel(R) PRO/100 S Server Adapter
Adapter Type      Ethernet 802.3
Product Name      Intel(R) PRO/100 S Server Adapter
Installed   True
PNP Device ID
      PCI\VEN_8086&DEV_1229&SUBSYS_10508086&REV_0D\3&13C0B0C5&0&20
Last Reset  5/16/2003 5:19:06 AM
```


Copyright Dell

```
Index 6
Service Name      E100B
IP Address  192.1.10.100
IP Subnet   255.255.255.0
Default IP Gateway      Not Available
DHCP Enabled      False
DHCP Server Not Available
DHCP Lease Expires      Not Available
DHCP Lease Obtained     Not Available
MAC Address 00:02:B3:89:63:82
Service Name      E100B
IRQ Number  17
I/O Port    0xECC0-0xECFF
Driver      c:\winnt\system32\drivers\e100bnt5.sys (123152,
5.41.27.0000)

Name  [00000007] Intel(R) PRO/100 S Server Adapter
Adapter Type      Ethernet 802.3
Product Name      Intel(R) PRO/100 S Server Adapter
Installed   True
PNP Device ID
      PCI\VEN_8086&DEV_1229&SUBSYS_10508086&REV_0D\3&13C0B0C5&0&30
Last Reset  5/16/2003 5:19:06 AM
Index 7
Service Name      E100B
IP Address  192.1.1.1
IP Subnet   255.255.255.0
Default IP Gateway      Not Available
DHCP Enabled      False
DHCP Server Not Available
DHCP Lease Expires      Not Available
DHCP Lease Obtained     Not Available
MAC Address 00:02:B3:8C:F2:98
Service Name      E100B
IRQ Number  20
I/O Port    0xEC80-0xECBF
Driver      c:\winnt\system32\drivers\e100bnt5.sys (123152,
5.41.27.0000)


[Protocol]

Item  Value
Name  MSAFD Tcpip [TCP/IP]
ConnectionlessService   False
GuaranteesDelivery      True
GuaranteesSequencing    True
MaximumAddressSize      16 bytes
MaximumMessageSize      0 bytes
MessageOriented   False
MinimumAddressSize      16 bytes
PseudoStreamOriented    False
SupportsBroadcasting    False
SupportsConnectData     False
SupportsDisconnectData  False
```


Copyright Dell

```
SupportsEncryption      False
SupportsExpeditedData   True
SupportsGracefulClosing True
SupportsGuaranteedBandwidth   False
SupportsMulticasting    False

Name  MSAFD Tcpip [UDP/IP]
ConnectionlessService   True
GuaranteesDelivery      False
GuaranteesSequencing    False
MaximumAddressSize      16 bytes
MaximumMessageSize      65467 bytes
MessageOriented   True
MinimumAddressSize      16 bytes
PseudoStreamOriented    False
SupportsBroadcasting    True
SupportsConnectData     False
SupportsDisconnectData  False
SupportsEncryption      False
SupportsExpeditedData   False
SupportsGracefulClosing False
SupportsGuaranteedBandwidth   False
SupportsMulticasting    True

Name  RSVP UDP Service Provider
ConnectionlessService   True
GuaranteesDelivery      False
GuaranteesSequencing    False
MaximumAddressSize      16 bytes
MaximumMessageSize      65467 bytes
MessageOriented   True
MinimumAddressSize      16 bytes
PseudoStreamOriented    False
SupportsBroadcasting    True
SupportsConnectData     False
SupportsDisconnectData  False
SupportsEncryption      True
SupportsExpeditedData   False
SupportsGracefulClosing False
SupportsGuaranteedBandwidth   False
SupportsMulticasting    True

Name  RSVP TCP Service Provider
ConnectionlessService   False
GuaranteesDelivery      True
GuaranteesSequencing    True
MaximumAddressSize      16 bytes
MaximumMessageSize      0 bytes
MessageOriented   False
MinimumAddressSize      16 bytes
PseudoStreamOriented    False
SupportsBroadcasting    False
SupportsConnectData     False
SupportsDisconnectData  False
SupportsEncryption      True
```


Copyright Dell

```
SupportsExpeditedData   True
SupportsGracefulClosing True
SupportsGuaranteedBandwidth   False
SupportsMulticasting    False

Name  MSAFD NetBIOS [\Device\NetBT_Tcpip_{3E4E49AF-0B8F-46D4-AD06-
B595EC94A4C3}] SEQPACKET 4
ConnectionlessService   False
GuaranteesDelivery      True
GuaranteesSequencing    True
MaximumAddressSize      20 bytes
MaximumMessageSize      64000 bytes
MessageOriented   True
MinimumAddressSize      20 bytes
PseudoStreamOriented    False
SupportsBroadcasting    False
SupportsConnectData     False
SupportsDisconnectData  False
SupportsEncryption      False
SupportsExpeditedData   False
SupportsGracefulClosing False
SupportsGuaranteedBandwidth   False
SupportsMulticasting    False

Name  MSAFD NetBIOS [\Device\NetBT_Tcpip_{3E4E49AF-0B8F-46D4-AD06-
B595EC94A4C3}] DATAGRAM 4
ConnectionlessService   True
GuaranteesDelivery      False
GuaranteesSequencing    False
MaximumAddressSize      20 bytes
MaximumMessageSize      64000 bytes
MessageOriented   True
MinimumAddressSize      20 bytes
PseudoStreamOriented    False
SupportsBroadcasting    True
SupportsConnectData     False
SupportsDisconnectData  False
SupportsEncryption      False
SupportsExpeditedData   False
SupportsGracefulClosing False
SupportsGuaranteedBandwidth   False
SupportsMulticasting    False

Name  MSAFD NetBIOS [\Device\NetBT_Tcpip_{3C8CADDF-D7E4-4BA8-B1D9-
969B42211330}] SEQPACKET 3
ConnectionlessService   False
GuaranteesDelivery      True
GuaranteesSequencing    True
MaximumAddressSize      20 bytes
MaximumMessageSize      64000 bytes
MessageOriented   True
MinimumAddressSize      20 bytes
PseudoStreamOriented    False
SupportsBroadcasting    False
SupportsConnectData     False
```


Copyright Dell

```
SupportsDisconnectData  False
SupportsEncryption      False
SupportsExpeditedData   False
SupportsGracefulClosing False
SupportsGuaranteedBandwidth   False
SupportsMulticasting    False

Name  MSAFD NetBIOS [\Device\NetBT_Tcpip_{3C8CADDF-D7E4-4BA8-B1D9-
969B42211330}] DATAGRAM 3
ConnectionlessService   True
GuaranteesDelivery      False
GuaranteesSequencing    False
MaximumAddressSize      20 bytes
MaximumMessageSize      64000 bytes
MessageOriented   True
MinimumAddressSize      20 bytes
PseudoStreamOriented    False
SupportsBroadcasting    True
SupportsConnectData     False
SupportsDisconnectData  False
SupportsEncryption      False
SupportsExpeditedData   False
SupportsGracefulClosing False
SupportsGuaranteedBandwidth   False
SupportsMulticasting    False

Name  MSAFD NetBIOS [\Device\NetBT_Tcpip_{67D62213-4A1D-4A86-9ADF-
EF52C0C1F8DF}] SEQPACKET 0
ConnectionlessService   False
GuaranteesDelivery      True
GuaranteesSequencing    True
MaximumAddressSize      20 bytes
MaximumMessageSize      64000 bytes
MessageOriented   True
MinimumAddressSize      20 bytes
PseudoStreamOriented    False
SupportsBroadcasting    False
SupportsConnectData     False
SupportsDisconnectData  False
SupportsEncryption      False
SupportsExpeditedData   False
SupportsGracefulClosing False
SupportsGuaranteedBandwidth   False
SupportsMulticasting    False

Name  MSAFD NetBIOS [\Device\NetBT_Tcpip_{67D62213-4A1D-4A86-9ADF-
EF52C0C1F8DF}] DATAGRAM 0
ConnectionlessService   True
GuaranteesDelivery      False
GuaranteesSequencing    False
MaximumAddressSize      20 bytes
MaximumMessageSize      64000 bytes
MessageOriented   True
MinimumAddressSize      20 bytes
PseudoStreamOriented    False
```


Copyright Dell

```
SupportsBroadcasting    True
SupportsConnectData     False
SupportsDisconnectData  False
SupportsEncryption      False
SupportsExpeditedData   False
SupportsGracefulClosing False
SupportsGuaranteedBandwidth   False
SupportsMulticasting    False

Name  MSAFD NetBIOS [\Device\NetBT_Tcpip_{6457AAC4-5D98-4B79-8F6C-
8D234A496C87}] SEQPACKET 1
ConnectionlessService   False
GuaranteesDelivery      True
GuaranteesSequencing    True
MaximumAddressSize      20 bytes
MaximumMessageSize      64000 bytes
MessageOriented   True
MinimumAddressSize      20 bytes
PseudoStreamOriented    False
SupportsBroadcasting    False
SupportsConnectData     False
SupportsDisconnectData  False
SupportsEncryption      False
SupportsExpeditedData   False
SupportsGracefulClosing False
SupportsGuaranteedBandwidth   False
SupportsMulticasting    False

Name  MSAFD NetBIOS [\Device\NetBT_Tcpip_{6457AAC4-5D98-4B79-8F6C-
8D234A496C87}] DATAGRAM 1
ConnectionlessService   True
GuaranteesDelivery      False
GuaranteesSequencing    False
MaximumAddressSize      20 bytes
MaximumMessageSize      64000 bytes
MessageOriented   True
MinimumAddressSize      20 bytes
PseudoStreamOriented    False
SupportsBroadcasting    True
SupportsConnectData     False
SupportsDisconnectData  False
SupportsEncryption      False
SupportsExpeditedData   False
SupportsGracefulClosing False
SupportsGuaranteedBandwidth   False
SupportsMulticasting    False

Name  MSAFD NetBIOS [\Device\NetBT_Tcpip_{0630F94E-070D-4D57-8C49-
676CC7BF20DE}] SEQPACKET 2
ConnectionlessService   False
GuaranteesDelivery      True
GuaranteesSequencing    True
MaximumAddressSize      20 bytes
MaximumMessageSize      64000 bytes
MessageOriented   True
```


Copyright Dell

```
MinimumAddressSize      20 bytes
PseudoStreamOriented    False
SupportsBroadcasting    False
SupportsConnectData     False
SupportsDisconnectData  False
SupportsEncryption      False
SupportsExpeditedData   False
SupportsGracefulClosing False
SupportsGuaranteedBandwidth   False
SupportsMulticasting    False

Name  MSAFD NetBIOS [\Device\NetBT_Tcpip_{0630F94E-070D-4D57-8C49-
676CC7BF20DE}] DATAGRAM 2
ConnectionlessService   True
GuaranteesDelivery      False
GuaranteesSequencing    False
MaximumAddressSize      20 bytes
MaximumMessageSize      64000 bytes
MessageOriented   True
MinimumAddressSize      20 bytes
PseudoStreamOriented    False
SupportsBroadcasting    True
SupportsConnectData     False
SupportsDisconnectData  False
SupportsEncryption      False
SupportsExpeditedData   False
SupportsGracefulClosing False
SupportsGuaranteedBandwidth   False
SupportsMulticasting    False


[WinSock]

Item  Value
File  c:\winnt\system32\winsock.dll
Version     3.10
Size  2.80 KB (2,864 bytes)

File  c:\winnt\system32\wsock32.dll
Version     5.00.2195.1207
Size  21.27 KB (21,776 bytes)


[Ports]

[ Following are sub-categories of this main category ]

[Serial]

Item  Value
Name  COM1
Status      OK
PNP Device ID     ACPI\PNP0501\1
Maximum Input Buffer Size     Not Available
Maximum Output Buffer Size    Not Available
```


Copyright Dell

```
Settable Baud Rate      Not Available
Settable Data Bits      Not Available
Settable Flow Control   Not Available
Settable Parity   Not Available
Settable Parity Check   Not Available
Settable Stop Bits      Not Available
Settable RLSD     Not Available
Supports RLSD     Not Available
Supports 16 Bit Mode    Not Available
Supports Special Characters   Not Available
Baud Rate   9600
Bits/Byte   8
Stop Bits   1
Parity      None
Busy  -1
Abort Read/Write on Error     Not Available
Binary Mode Enabled     Not Available
Continue XMit on XOff   Not Available
CTS Outflow Control     Not Available
Discard NULL Bytes      Not Available
DSR Outflow Control     Not Available
DSR Sensitivity   Not Available
DTR Flow Control Type   Not Available
EOF Character     Not Available
Error Replace Character Not Available
Error Replacement Enabled     Not Available
Event Character   Not Available
Parity Check Enabled    -1
RTS Flow Control Type   Not Available
XOff Character    19
XOffXMit Threshold      512
XOn Character     17
XOnXMit Threshold 2048
XOnXOff InFlow Control  Not Available
XOnXOff OutFlow Control Not Available
IRQ Number  4
I/O Port    0x03F8-0x03FF
Driver      c:\winnt\system32\drivers\serial.sys (62448, 5.00.2134.1)


[Parallel]

Item  Value
Name  LPT1
PNP Device ID     ACPI\PNP0401\4&639D4DC&0


[Storage]

[ Following are sub-categories of this main category ]

[Drives]

Item  Value
Drive A:
```


Copyright Dell

```
Description 3 1/2 Inch Floppy Drive

Drive C:
Description Local Fixed Disk
Compressed  False
File System NTFS
Size  16.95 GB (18,202,509,312 bytes)
Free Space  12.87 GB (13,824,237,568 bytes)
Volume Name
Volume Serial Number    309C10C1
Partition   Disk #0, Partition #0
Partition Size    16.95 GB (18,202,512,384 bytes)
Starting Offset   32256 bytes
Drive Description Disk drive
Drive Manufacturer      (Standard disk drives)
Drive Model SEAGATE ST318203LC SCSI Disk Device
Drive BytesPerSector    512
Drive MediaLoaded True
Drive MediaType   Fixed hard disk media
Drive Partitions  1
Drive SCSIBus     0
Drive SCSILogicalUnit   0
Drive SCSIPort    2
Drive SCSITargetId      0
Drive SectorsPerTrack   63
Drive Size  18202544640 bytes
Drive TotalCylinders    2213
Drive TotalSectors      35551845
Drive TotalTracks 564315
Drive TracksPerCylinder 255


[SCSI]

Item  Value
Name  Adaptec AIC-7899 Ultra160/m PCI SCSI Card
Caption     Adaptec AIC-7899 Ultra160/m PCI SCSI Card
Driver      adpu160m
Status      OK
PNP Device ID
      PCI\VEN_9005&DEV_00CF&SUBSYS_011C1028&REV_01\3&1070020&0&10
Device ID   PCI\VEN_9005&DEV_00CF&SUBSYS_011C1028&REV_01\3&1070020&0&10
Device Map  Not Available
Index Not Available
Max Number Controlled   Not Available
IRQ Number  29
I/O Port    0xDC00-0xDCFF
Driver      c:\winnt\system32\drivers\adpu160m.sys (64432, v3.10a)

Name  Adaptec AIC-7899 Ultra160/m PCI SCSI Card
Caption     Adaptec AIC-7899 Ultra160/m PCI SCSI Card
Driver      adpu160m
Status      OK
PNP Device ID
      PCI\VEN_9005&DEV_00CF&SUBSYS_011C1028&REV_01\3&1070020&0&11
```


Copyright Dell

```
Device ID   PCI\VEN_9005&DEV_00CF&SUBSYS_011C1028&REV_01\3&1070020&0&11
Device Map  Not Available
Index Not Available
Max Number Controlled   Not Available
IRQ Number  30
I/O Port    0xD800-0xD8FF
Driver      c:\winnt\system32\drivers\adpu160m.sys (64432, v3.10a)

Name  QLogic QLA23xx PCI Fibre Channel Adapter
Caption     QLogic QLA23xx PCI Fibre Channel Adapter
Driver      ql2300
Status      OK
PNP Device ID
      PCI\VEN_1077&DEV_2312&SUBSYS_01001077&REV_02\3&1070020&0&30
Device ID   PCI\VEN_1077&DEV_2312&SUBSYS_01001077&REV_02\3&1070020&0&30
Device Map  Not Available
Index Not Available
Max Number Controlled   Not Available
IRQ Number  28
I/O Port    0xD400-0xD4FF
Driver      c:\winnt\system32\drivers\ql2300.sys (445836, 8.2.2.10 Beta
1A (W2K VI))


[Printing]

Name  Port Name   Server Name
No printing information

[Problem Devices]

Device      PNP Device ID     Error Code
Intel 82544EI-based XT Gigabit Adapter
      PCI\VEN_8086&DEV_1008&SUBSYS_011C1028&REV_02\3&29E81982&0&10
      22

[USB]

Device      PNP Device ID
Standard OpenHCD USB Host Controller
      PCI\VEN_1166&DEV_0220&SUBSYS_02201166&REV_05\3&13C0B0C5&0&7A
USB Root Hub      USB\ROOT_HUB\4&1A0F8909&0

[Software Environment]

[ Following are sub-categories of this main category ]

[Drivers]

Name  Description File  Type  Started     Start Mode  State Status
      Error Control     Accept Pause      Accept Stop
abiosdsk    Abiosdsk    Not Available     Kernel Driver     False
      Disabled    Stopped     OK    Ignore      False False
abp480n5    abp480n5    Not Available     Kernel Driver     False
      Disabled    Stopped     OK    Normal      False False
```


Copyright Dell

```
acpi  Microsoft ACPI Driver   c:\winnt\system32\drivers\acpi.sys
      Kernel Driver     True  Boot  Running     OK    Normal      False
      True
acpiec      ACPIEC      c:\winnt\system32\drivers\acpiec.sys
      Kernel Driver     False Disabled    Stopped     OK    Normal
      False False
adpu160m    adpu160m    c:\winnt\system32\drivers\adpu160m.sys
      Kernel Driver     True  Boot  Running     OK    Normal      False
      True
afd   AFD Networking Support Environment
      c:\winnt\system32\drivers\afd.sys   Kernel Driver     True  Auto
      Running     OK    Normal      False True
aha154x     Aha154x     Not Available     Kernel Driver     False
      Disabled    Stopped     OK    Normal      False False
aic116x     aic116x     Not Available     Kernel Driver     False
      Disabled    Stopped     OK    Normal      False False
aic78u2     aic78u2     Not Available     Kernel Driver     False
      Disabled    Stopped     OK    Normal      False False
aic78xx     aic78xx     Not Available     Kernel Driver     False
      Disabled    Stopped     OK    Normal      False False
ami0nt      ami0nt      Not Available     Kernel Driver     False
      Disabled    Stopped     OK    Normal      False False
amsint      amsint      Not Available     Kernel Driver     False
      Disabled    Stopped     OK    Normal      False False
asc   asc   Not Available     Kernel Driver     False Disabled
      Stopped     OK    Normal      False False
asc3350p    asc3350p    Not Available     Kernel Driver     False
      Disabled    Stopped     OK    Normal      False False
asc3550     asc3550     Not Available     Kernel Driver     False
      Disabled    Stopped     OK    Normal      False False
asyncmac    RAS Asynchronous Media Driver
      c:\winnt\system32\drivers\asyncmac.sys    Kernel Driver     False
      Manual      Stopped     OK    Normal      False False
atapi Standard IDE/ESDI Hard Disk Controller
      c:\winnt\system32\drivers\atapi.sys Kernel Driver     True  Boot
      Running     OK    Normal      False True
atdisk      Atdisk      Not Available     Kernel Driver     False
      Disabled    Stopped     OK    Ignore      False False
atirage3    atirage3    c:\winnt\system32\drivers\atimpab.sys
      Kernel Driver     True  Manual      Running     OK    Ignore
      False True
atmarpc     ATM ARP Client Protocol
      c:\winnt\system32\drivers\atmarpc.sys     Kernel Driver     False
      Manual      Stopped     OK    Normal      False False
audstub     Audio Stub Driver c:\winnt\system32\drivers\audstub.sys
      Kernel Driver     True  Manual      Running     OK    Normal
      False True
beep  Beep  c:\winnt\system32\drivers\beep.sys  Kernel Driver     True
      System      Running     OK    Normal      False True
buslogic    BusLogic    Not Available     Kernel Driver     False
      Disabled    Stopped     OK    Normal      False False
cd20xrnt    cd20xrnt    Not Available     Kernel Driver     False
      Disabled    Stopped     OK    Normal      False False
```


Copyright Dell

```
cdaudio     Cdaudio     c:\winnt\system32\drivers\cdaudio.sys
      Kernel Driver     False System      Stopped     OK    Ignore
      False False
cdfs  Cdfs  c:\winnt\system32\drivers\cdfs.sys  File System Driver
      True  Disabled    Running     OK    Normal      False True
cdrom CD-ROM Driver     c:\winnt\system32\drivers\cdrom.sys Kernel
Driver      True  System      Running     OK    Normal      False True
changer     Changer     Not Available     Kernel Driver     False
      System      Stopped     OK    Ignore      False False
cpqarray    Cpqarray    Not Available     Kernel Driver     False
      Disabled    Stopped     OK    Normal      False False
cpqarry2    cpqarry2    Not Available     Kernel Driver     False
      Disabled    Stopped     OK    Normal      False False
cpqfcalm    cpqfcalm    Not Available     Kernel Driver     False
      Disabled    Stopped     OK    Normal      False False
cpqfws2e    cpqfws2e    Not Available     Kernel Driver     False
      Disabled    Stopped     OK    Normal      False False
dac960nt    dac960nt    Not Available     Kernel Driver     False
      Disabled    Stopped     OK    Normal      False False
deckzpsx    deckzpsx    Not Available     Kernel Driver     False
      Disabled    Stopped     OK    Normal      False False
dfsdriver   DfsDriver   c:\winnt\system32\drivers\dfs.sys   File System
Driver      True  Boot  Running     OK    Normal      False True
disk  Disk Driver c:\winnt\system32\drivers\disk.sys  Kernel Driver
      True  Boot  Running     OK    Normal      False True
diskperf    Diskperf    c:\winnt\system32\drivers\diskperf.sys
      Kernel Driver     True  Boot  Running     OK    Normal      False
      True
dmboot      dmboot      c:\winnt\system32\drivers\dmboot.sys
      Kernel Driver     False Disabled    Stopped     OK    Normal
      False False
dmio  Logical Disk Manager Driver   c:\winnt\system32\drivers\dmio.sys
      Kernel Driver     True  Boot  Running     OK    Normal      False
      True
dmload      dmload      c:\winnt\system32\drivers\dmload.sys
      Kernel Driver     True  Boot  Running     OK    Normal      False
      True
e1000 Intel(R) PRO/1000 Adapter Driver
      c:\winnt\system32\drivers\e1000nt5.sys    Kernel Driver     False
      Manual      Stopped     OK    Normal      False False
e100b Intel(R) PRO Adapter Driver
      c:\winnt\system32\drivers\e100bnt5.sys    Kernel Driver     True
      Manual      Running     OK    Normal      False True
efs   EFS   c:\winnt\system32\drivers\efs.sys   File System Driver
      True  Disabled    Running     OK    Normal      False True
fastfat     Fastfat     c:\winnt\system32\drivers\fastfat.sys     File
System Driver     True  Disabled    Running     OK    Normal      False
      True
fd16_700    Fd16_700    Not Available     Kernel Driver     False
      Disabled    Stopped     OK    Normal      False False
fdc   Floppy Disk Controller Driver c:\winnt\system32\drivers\fdc.sys
      Kernel Driver     True  Manual      Running     OK    Normal
      False True
fireport    fireport    Not Available     Kernel Driver     False
      Disabled    Stopped     OK    Normal      False False
```


Copyright Dell

```
flashpnt    flashpnt    Not Available     Kernel Driver     False
      Disabled    Stopped     OK    Normal      False False
flpydisk    Floppy Disk Driver
      c:\winnt\system32\drivers\flpydisk.sys    Kernel Driver     True
      Manual      Running     OK    Normal      False True
ftdisk      Volume Manager Driver
      c:\winnt\system32\drivers\ftdisk.sys      Kernel Driver     True
      Boot  Running     OK    Normal      False True
gpc   Generic Packet Classifier     c:\winnt\system32\drivers\msgpc.sys
      Kernel Driver     True  Manual      Running     OK    Normal
      False True
i8042prt    i8042 Keyboard and PS/2 Mouse Port Driver
      c:\winnt\system32\drivers\i8042prt.sys    Kernel Driver     True
      System      Running     OK    Normal      False True
ini910u     ini910u     Not Available     Kernel Driver     False
      Disabled    Stopped     OK    Normal      False False
intelide    IntelIde    Not Available     Kernel Driver     False
      Disabled    Stopped     OK    Normal      False False
ipfilterdriver    IP Traffic Filter Driver
      c:\winnt\system32\drivers\ipfltdrv.sys    Kernel Driver     False
      Manual      Stopped     OK    Normal      False False
ipinip      IP in IP Tunnel Driver
      c:\winnt\system32\drivers\ipinip.sys      Kernel Driver     False
      Manual      Stopped     OK    Normal      False False
ipnat IP Network Address Translator c:\winnt\system32\drivers\ipnat.sys
      Kernel Driver     False Manual      Stopped     OK    Normal
      False False
ipsec IPSEC driver      c:\winnt\system32\drivers\ipsec.sys Kernel
Driver      False Manual      Stopped     OK    Normal      False False
ipsraidn    ipsraidn    Not Available     Kernel Driver     False
      Disabled    Stopped     OK    Normal      False False
isapnp      PnP ISA/EISA Bus Driver
      c:\winnt\system32\drivers\isapnp.sys      Kernel Driver     True
      Boot  Running     OK    Critical    False True
kbdclass    Keyboard Class Driver
      c:\winnt\system32\drivers\kbdclass.sys    Kernel Driver     True
      System      Running     OK    Normal      False True
ksecdd      KSecDD      c:\winnt\system32\drivers\ksecdd.sys
      Kernel Driver     True  Boot  Running     OK    Normal      False
      True
lbrtfdc     lbrtfdc     Not Available     Kernel Driver     False
      System      Stopped     OK    Ignore      False False
lp6nds35    lp6nds35    Not Available     Kernel Driver     False
      Disabled    Stopped     OK    Normal      False False
mnmdd mnmdd c:\winnt\system32\drivers\mnmdd.sys Kernel Driver     True
      System      Running     OK    Ignore      False True
modem Modem c:\winnt\system32\drivers\modem.sys Kernel Driver     False
      Manual      Stopped     OK    Ignore      False False
mouclass    Mouse Class Driver
      c:\winnt\system32\drivers\mouclass.sys    Kernel Driver     True
      System      Running     OK    Normal      False True
mountmgr    MountMgr    c:\winnt\system32\drivers\mountmgr.sys
      Kernel Driver     True  Boot  Running     OK    Normal      False
      True
```


Copyright Dell

```
mraid35x    mraid35x    Not Available     Kernel Driver     False
      Disabled    Stopped     OK    Normal      False False
mrxsmb      MRXSMB      c:\winnt\system32\drivers\mrxsmb.sys      File
System Driver     True  System      Running     OK    Normal      False
      True
msfs  Msfs  c:\winnt\system32\drivers\msfs.sys  File System Driver
      True  System      Running     OK    Normal      False True
mskssrv     Microsoft Streaming Service Proxy
      c:\winnt\system32\drivers\mskssrv.sys     Kernel Driver     False
      Manual      Stopped     OK    Normal      False False
mspclock    Microsoft Streaming Clock Proxy
      c:\winnt\system32\drivers\mspclock.sys    Kernel Driver     False
      Manual      Stopped     OK    Normal      False False
mspqm Microsoft Streaming Quality Manager Proxy
      c:\winnt\system32\drivers\mspqm.sys Kernel Driver     False
      Manual      Stopped     OK    Normal      False False
mup   Mup   c:\winnt\system32\drivers\mup.sys   File System Driver
      True  Boot  Running     OK    Normal      False True
ncrc710     Ncrc710     Not Available     Kernel Driver     False
      Disabled    Stopped     OK    Normal      False False
ndis  NDIS System Driver      c:\winnt\system32\drivers\ndis.sys
      Kernel Driver     True  Boot  Running     OK    Normal      False
      True
ndistapi    Remote Access NDIS TAPI Driver
      c:\winnt\system32\drivers\ndistapi.sys    Kernel Driver     True
      Manual      Running     OK    Normal      False True
ndiswan     Remote Access NDIS WAN Driver
      c:\winnt\system32\drivers\ndiswan.sys     Kernel Driver     True
      Manual      Running     OK    Normal      False True
ndproxy     NDIS Proxy  c:\winnt\system32\drivers\ndproxy.sys
      Kernel Driver     True  Manual      Running     OK    Normal
      False True
netbios     NetBIOS Interface c:\winnt\system32\drivers\netbios.sys
      File System Driver      True  System      Running     OK
      Normal      False True
netbt NetBios over Tcpip      c:\winnt\system32\drivers\netbt.sys
      Kernel Driver     True  System      Running     OK    Normal
      False True
netdetect   NetDetect   c:\winnt\system32\drivers\netdtect.sys
      Kernel Driver     False Manual      Stopped     OK    Normal
      False False
npfs  Npfs  c:\winnt\system32\drivers\npfs.sys  File System Driver
      True  System      Running     OK    Normal      False True
ntfs  Ntfs  c:\winnt\system32\drivers\ntfs.sys  File System Driver
      True  Disabled    Running     OK    Normal      False True
null  Null  c:\winnt\system32\drivers\null.sys  Kernel Driver     True
      System      Running     OK    Normal      False True
nwlnkflt    IPX Traffic Filter Driver
      c:\winnt\system32\drivers\nwlnkflt.sys    Kernel Driver     False
      Manual      Stopped     OK    Normal      False False
nwlnkfwd    IPX Traffic Forwarder Driver
      c:\winnt\system32\drivers\nwlnkfwd.sys    Kernel Driver     False
      Manual      Stopped     OK    Normal      False False
```


Copyright Dell

```
openhci     Microsoft USB Open Host Controller Driver
      c:\winnt\system32\drivers\openhci.sys     Kernel Driver     True
      Manual      Running     OK    Normal      False True
parallel    Parallel class driver
      c:\winnt\system32\drivers\parallel.sys    Kernel Driver     True
      Manual      Running     OK    Normal      False True
parport     Parallel port driver
      c:\winnt\system32\drivers\parport.sys     Kernel Driver     True
      System      Running     OK    Ignore      False True
partmgr     PartMgr     c:\winnt\system32\drivers\partmgr.sys
      Kernel Driver     True  Boot  Running     OK    Normal      False
      True
parvdm      ParVdm      c:\winnt\system32\drivers\parvdm.sys
      Kernel Driver     True  Auto  Running     OK    Ignore      False
      True
pci   PCI Bus Driver    c:\winnt\system32\drivers\pci.sys   Kernel
Driver      True  Boot  Running     OK    Critical    False True
pcidump     PCIDump     Not Available     Kernel Driver     False
      System      Stopped     OK    Ignore      False False
pciide      PCIIde      c:\winnt\system32\drivers\pciide.sys
      Kernel Driver     True  Boot  Running     OK    Normal      False
      True
pcmcia      Pcmcia      c:\winnt\system32\drivers\pcmcia.sys
      Kernel Driver     False Disabled    Stopped     OK    Normal
      False False
pdcomp      PDCOMP      Not Available     Kernel Driver     False
      Manual      Stopped     OK    Ignore      False False
pdframe     PDFRAME     Not Available     Kernel Driver     False
      Manual      Stopped     OK    Ignore      False False
pdreli      PDRELI      Not Available     Kernel Driver     False
      Manual      Stopped     OK    Ignore      False False
pdrframe    PDRFRAME    Not Available     Kernel Driver     False
      Manual      Stopped     OK    Ignore      False False
pptpminiport      WAN Miniport (PPTP)
      c:\winnt\system32\drivers\raspptp.sys     Kernel Driver     True
      Manual      Running     OK    Normal      False True
ptilink     Direct Parallel Link Driver
      c:\winnt\system32\drivers\ptilink.sys     Kernel Driver     True
      Manual      Running     OK    Normal      False True
ql1080      ql1080      Not Available     Kernel Driver     False
      Disabled    Stopped     OK    Normal      False False
ql10wnt     Ql10wnt     Not Available     Kernel Driver     False
      Disabled    Stopped     OK    Normal      False False
ql1240      ql1240      Not Available     Kernel Driver     False
      Disabled    Stopped     OK    Normal      False False
ql2100      ql2100      Not Available     Kernel Driver     False
      Disabled    Stopped     OK    Normal      False False
ql2300      ql2300      c:\winnt\system32\drivers\ql2300.sys
      Kernel Driver     True  Boot  Running     OK    Normal      False
      True
qlvika      qlvika      c:\winnt\system32\drivers\qlvika.sys
      Kernel Driver     True  Auto  Running     OK    Normal      False
      True
```


Copyright Dell

```
rasacd      Remote Access Auto Connection Driver
      c:\winnt\system32\drivers\rasacd.sys      Kernel Driver     True
      System      Running     OK    Normal      False True
rasl2tp     WAN Miniport (L2TP)
      c:\winnt\system32\drivers\rasl2tp.sys     Kernel Driver     True
      Manual      Running     OK    Normal      False True
raspti      Direct Parallel   c:\winnt\system32\drivers\raspti.sys
      Kernel Driver     True  Manual      Running     OK    Normal
      False True
rca   Microsoft Streaming Network Raw Channel Access
      c:\winnt\system32\drivers\rca.sys   Kernel Driver     False
      Manual      Stopped     OK    Normal      False False
rdbss Rdbss c:\winnt\system32\drivers\rdbss.sys File System Driver
      True  System      Running     OK    Normal      False True
rdpwd RDPWD c:\winnt\system32\drivers\rdpwd.sys Kernel Driver     False
      Manual      Stopped     OK    Ignore      False False
redbook     Digital CD Audio Playback Filter Driver
      c:\winnt\system32\drivers\redbook.sys     Kernel Driver     False
      System      Stopped     OK    Normal      False False
serenum     Serenum Filter Driver
      c:\winnt\system32\drivers\serenum.sys     Kernel Driver     True
      Manual      Running     OK    Normal      False True
serial      Serial port driver
      c:\winnt\system32\drivers\serial.sys      Kernel Driver     True
      System      Running     OK    Ignore      False True
sfloppy     Sfloppy     c:\winnt\system32\drivers\sfloppy.sys
      Kernel Driver     False System      Stopped     OK    Ignore
      False False
sglfb sglfb Not Available     Kernel Driver     False System
      Stopped     OK    Normal      False False
simbad      Simbad      Not Available     Kernel Driver     False
      Disabled    Stopped     OK    Normal      False False
sparrow     Sparrow     Not Available     Kernel Driver     False
      Disabled    Stopped     OK    Normal      False False
spud  Special Purpose Utility Driver
      c:\winnt\system32\drivers\spud.sys  Kernel Driver     True
      Manual      Running     OK    Normal      False True
srv   Srv   c:\winnt\system32\drivers\srv.sys   File System Driver
      True  Manual      Running     OK    Normal      False True
swenum      Software Bus Driver
      c:\winnt\system32\drivers\swenum.sys      Kernel Driver     True
      Manual      Running     OK    Normal      False True
symc810     symc810     Not Available     Kernel Driver     False
      Disabled    Stopped     OK    Normal      False False
symc8xx     symc8xx     Not Available     Kernel Driver     False
      Disabled    Stopped     OK    Normal      False False
sym_hi      sym_hi      Not Available     Kernel Driver     False
      Disabled    Stopped     OK    Normal      False False
tcpip TCP/IP Protocol Driver  c:\winnt\system32\drivers\tcpip.sys
      Kernel Driver     True  System      Running     OK    Normal
      False True
tdasync     TDASYNC     c:\winnt\system32\drivers\tdasync.sys
      Kernel Driver     False Manual      Stopped     OK    Ignore
      False False
```


Copyright Dell

```
tdipx TDIPX c:\winnt\system32\drivers\tdipx.sys Kernel Driver     False
      Manual      Stopped     OK    Ignore      False False
tdnetb      TDNETB      c:\winnt\system32\drivers\tdnetb.sys
      Kernel Driver     False Manual      Stopped     OK    Ignore
      False False
tdpipe      TDPIPE      c:\winnt\system32\drivers\tdpipe.sys
      Kernel Driver     False Manual      Stopped     OK    Ignore
      False False
tdspx TDSPX c:\winnt\system32\drivers\tdspx.sys Kernel Driver     False
      Manual      Stopped     OK    Ignore      False False
tdtcp TDTCP c:\winnt\system32\drivers\tdtcp.sys Kernel Driver     False
      Manual      Stopped     OK    Ignore      False False
termdd      Terminal Device Driver
      c:\winnt\system32\drivers\termdd.sys      Kernel Driver     False
      Disabled    Stopped     OK    Normal      False False
tga   tga   Not Available     Kernel Driver     False System
      Stopped     OK    Ignore      False False
udfs  Udfs  c:\winnt\system32\drivers\udfs.sys  File System Driver
      False Disabled    Stopped     OK    Normal      False False
ultra66     ultra66     Not Available     Kernel Driver     False
      Disabled    Stopped     OK    Normal      False False
update      Microcode Update Driver
      c:\winnt\system32\drivers\update.sys      Kernel Driver     True
      Manual      Running     OK    Normal      False True
usbhub      Microsoft USB Standard Hub Driver
      c:\winnt\system32\drivers\usbhub.sys      Kernel Driver     True
      Manual      Running     OK    Normal      False True
vgasave     VgaSave     c:\winnt\system32\drivers\vga.sys   Kernel
Driver      True  System      Running     OK    Ignore      False True
wanarp      Remote Access IP ARP Driver
      c:\winnt\system32\drivers\wanarp.sys      Kernel Driver     True
      Manual      Running     OK    Normal      False True
wdica WDICA Not Available     Kernel Driver     False Manual
      Stopped     OK    Ignore      False False

[Environment Variables]

Variable    Value User Name
ComSpec     %SystemRoot%\system32\cmd.exe <SYSTEM>
HOME  C:/   <SYSTEM>
NUMBER_OF_PROCESSORS    1     <SYSTEM>
OS    Windows_NT  <SYSTEM>
Os2LibPath  %SystemRoot%\system32\os2\dll;      <SYSTEM>
Path
      C:\mksnt;C:\WINNT\system32;C:\WINNT;C:\WINNT\System32\Wbem;C:\SQL
_2K_STD\x86\binn;.;C:\Program Files\Microsoft SQL Server\80\Tools\BINN
      <SYSTEM>
PATHEXT     .COM;.EXE;.BAT;.CMD;.VBS;.VBE;.JS;.JSE;.WSF;.WSH
      <SYSTEM>
PROCESSOR_ARCHITECTURE  x86   <SYSTEM>
PROCESSOR_IDENTIFIER    x86 Family 6 Model 11 Stepping 1, GenuineIntel
      <SYSTEM>
PROCESSOR_LEVEL   6     <SYSTEM>
PROCESSOR_REVISION      0b01  <SYSTEM>
ROOTDIR     C:/   <SYSTEM>
```


Copyright Dell

```
SHELL C:/mksnt/sh.exe   <SYSTEM>
TEMP  %SystemRoot%\TEMP <SYSTEM>
TMP   %SystemRoot%\TEMP <SYSTEM>
TMPDIR      C:/WINNT/TEMP     <SYSTEM>
windir      %SystemRoot%      <SYSTEM>
TEMP  %USERPROFILE%\Local Settings\Temp   CLIENT1\Administrator
TMP   %USERPROFILE%\Local Settings\Temp   CLIENT1\Administrator

[Jobs]

[ Following are sub-categories of this main category ]

[Print]

Document    Size  Owner Notify      Status      Time Submitted    Start
Time  Until Time  Elapsed Time      Pages Printed     Job ID
      Priority    Parameters  Driver Name Print Processor   Host Print
Queue Data Type   Name
Unknown     Unknown     Unknown     Unknown     Unknown     Unknown
      Unknown     Unknown     Unknown     Unknown     Unknown
      Unknown     Unknown     Unknown     Unknown     Unknown
      Unknown     Unknown

[Network Connections]

Local Name  Remote Name Type  Status      User Name
No network connections information

[Running Tasks]

Name  Path  Process ID  Priority    Min Working Set   Max Working Set
      Start Time  Version     Size  File Date
system idle process     Not Available     0     0     Not Available
      Not Available     Not Available     Unknown     Unknown
      Unknown
system      Not Available     8     8     0     1413120     Not
Available   Unknown     Unknown     Unknown
smss.exe    c:\winnt\system32\smss.exe    160   11    204800
      1413120     5/16/2003 10:19:30 AM   5.00.2195.31      44.27 KB
(45,328 bytes)    7/26/2000 7:00:00 AM
csrss.exe   Not Available     184   13    Not Available     Not
Available   5/16/2003 10:19:33 AM   Unknown     Unknown     Unknown
winlogon.exe      c:\winnt\system32\winlogon.exe      204   13
      204800      1413120     5/16/2003 10:19:34 AM   5.00.2195.1600
      172.77 KB (176,912 bytes)     7/26/2000 7:00:00 AM
services.exe      c:\winnt\system32\services.exe      232   9
      204800      1413120     5/16/2003 10:19:35 AM   5.00.2134.1 86.77
KB (88,848 bytes) 7/26/2000 7:00:00 AM
lsass.exe   c:\winnt\system32\lsass.exe   244   13    204800
      1413120     5/16/2003 10:19:35 AM   5.00.2195.1620    32.77 KB
(33,552 bytes)    7/26/2000 7:00:00 AM
svchost.exe c:\winnt\system32\svchost.exe 404   8     204800
      1413120     5/16/2003 10:19:38 AM   5.00.2134.1 7.77 KB (7,952
bytes)      7/26/2000 7:00:00 AM
```


Copyright Dell

```
msdtc.exe   c:\winnt\system32\msdtc.exe   428   8     204800
      1413120     5/16/2003 10:19:38 AM   1999.9.3421.3     6.77 KB
(6,928 bytes)     3/29/2002 6:39:39 AM
svchost.exe c:\winnt\system32\svchost.exe 532   8     204800
      1413120     5/16/2003 10:19:40 AM   5.00.2134.1 7.77 KB (7,952
bytes)      7/26/2000 7:00:00 AM
regsvc.exe  c:\winnt\system32\regsvc.exe  560   8     204800
      1413120     5/16/2003 10:19:40 AM   5.00.2195.31      65.27 KB
(66,832 bytes)    7/26/2000 7:00:00 AM
mstask.exe  c:\winnt\system32\mstask.exe  572   8     204800
      1413120     5/16/2003 10:19:40 AM   4.71.2137.1 115.27 KB
(118,032 bytes)   3/29/2002 12:38:49 PM
winmgmt.exe c:\winnt\system32\wbem\winmgmt.exe  608   8     204800
      1413120     5/16/2003 10:19:41 AM   1.50.1085.0009    192.08 KB
(196,685 bytes)   7/26/2000 7:00:00 AM
inetinfo.exe      c:\winnt\system32\inetsrv\inetinfo.exe    664   8
      204800      1413120     5/16/2003 10:19:42 AM   5.00.0984   14.27
KB (14,608 bytes) 3/29/2002 6:39:28 AM
explorer.exe      c:\winnt\explorer.exe   800   8     204800
      1413120     5/16/2003 10:19:49 AM   5.00.3103.1000    237.27 KB
(242,960 bytes)   7/26/2000 7:00:00 AM
svchost.exe c:\winnt\system32\svchost.exe 1016  8     204800
      1413120     5/16/2003 10:20:06 AM   5.00.2134.1 7.77 KB (7,952
bytes)      7/26/2000 7:00:00 AM
dllhost.exe Not Available     788   8     Not Available     Not
Available   5/16/2003 10:24:35 AM   Unknown     Unknown     Unknown
dllhost.exe Not Available     868   8     Not Available     Not
Available   5/16/2003 10:24:37 AM   Unknown     Unknown     Unknown
mmc.exe     c:\winnt\system32\mmc.exe     1896  8     204800
      1413120     5/20/2003 11:14:40 AM   5.00.2153.1 589.27 KB
(603,408 bytes)   7/26/2000 7:00:00 AM
rsvp.exe    c:\winnt\system32\rsvp.exe    2048  8     204800
      1413120     5/20/2003 11:15:08 AM   5.00.2167.1 172.77 KB
(176,912 bytes)   7/26/2000 7:00:00 AM

[Loaded Modules]

Name  Version     Size  File Date   Manufacturer      Path
traffic.dll 5.00.2139.1 30.77 KB (31,504 bytes) 7/26/2000 7:00:00 AM
      Microsoft Corporation   c:\winnt\system32\traffic.dll
rsvp.exe    5.00.2167.1 172.77 KB (176,912 bytes)     7/26/2000 7:00:00
AM    Microsoft Corporation   c:\winnt\system32\rsvp.exe
wbemprox.dll      1.50.1085.0015    40.08 KB (41,040 bytes) 7/26/2000
7:00:00 AM  Microsoft Corporation   c:\winnt\system32\wbem\wbemprox.dll
mlang.dll   5.00.3103.1000    510.77 KB (523,024 bytes)     7/26/2000
7:00:00 AM  Microsoft Corporation   c:\winnt\system32\mlang.dll
rassapi.dll 5.00.2188.1 14.27 KB (14,608 bytes) 7/26/2000 7:00:00 AM
      Microsoft Corporation   c:\winnt\system32\rassapi.dll
adsnt.dll   5.00.2195.1600    194.27 KB (198,928 bytes)     7/26/2000
7:00:00 AM  Microsoft Corporation   c:\winnt\system32\adsnt.dll
dbghelp.dll 5.00.2195.1 159.27 KB (163,088 bytes)     7/26/2000 7:00:00
AM    Microsoft Corporation   c:\winnt\system32\dbghelp.dll
localsec.dll      5.00.2195.1340    227.27 KB (232,720 bytes)
      7/26/2000 7:00:00 AM    Microsoft Corporation
      c:\winnt\system32\localsec.dll
```


Copyright Dell

```
devmgr.dll  5.00.2166.1 215.77 KB (220,944 bytes)     7/26/2000 7:00:00
AM    Microsoft Corporation   c:\winnt\system32\devmgr.dll
filemgmt.dll      5.00.2134.1 287.27 KB (294,160 bytes)     7/26/2000
7:00:00 AM  Microsoft Corporation   c:\winnt\system32\filemgmt.dll
pdh.dll     5.00.2195.1600    143.27 KB (146,704 bytes)     7/26/2000
7:00:00 AM  Microsoft Corporation   c:\winnt\system32\pdh.dll
smlogcfg.dll      5.00.2163.1 273.27 KB (279,824 bytes)     7/26/2000
7:00:00 AM  Microsoft Corporation   c:\winnt\system32\smlogcfg.dll
cabinet.dll 5.00.2147.1 54.77 KB (56,080 bytes) 7/26/2000 7:00:00 AM
      Microsoft Corporation   c:\winnt\system32\cabinet.dll
msinfo32.dll      5.00.2177.1 312.27 KB (319,760 bytes)     3/29/2002
12:38:52 PM Microsoft Corporation   c:\program files\common
files\microsoft shared\msinfo\msinfo32.dll
riched20.dll      5.30.23.1203      421.27 KB (431,376 bytes)
      7/26/2000 7:00:00 AM    Microsoft Corporation
      c:\winnt\system32\riched20.dll
riched32.dll      5.00.2134.1 3.77 KB (3,856 bytes)   7/26/2000 7:00:00
AM    Microsoft Corporation   c:\winnt\system32\riched32.dll
els.dll     5.00.2175.1 151.27 KB (154,896 bytes)     7/26/2000 7:00:00
AM    Microsoft Corporation   c:\winnt\system32\els.dll
ntmsmgr.dll 1,0,0,1     427.77 KB (438,032 bytes)     7/26/2000 7:00:00
AM    Microsoft Corporation and HighGround Systems, Inc.
      c:\winnt\system32\ntmsmgr.dll
mmfutil.dll 1.50.1085.0000    32.06 KB (32,829 bytes) 7/26/2000 7:00:00
AM    Microsoft Corporation   c:\winnt\system32\mmfutil.dll
logdrive.dll      1.50.1085.0000    200.06 KB (204,863 bytes)
      7/26/2000 7:00:00 AM    Microsoft Corporation
      c:\winnt\system32\logdrive.dll
dfrgres.dll 5.00.2150.1 27.50 KB (28,160 bytes) 7/26/2000 7:00:00 AM
      Executive Software International, Inc.
      c:\winnt\system32\dfrgres.dll
dfrgsnap.dll      5.00.2195.31      41.77 KB (42,768 bytes) 7/26/2000
7:00:00 AM  Executive Software International, Inc.
      c:\winnt\system32\dfrgsnap.dll
dmdskres.dll      2191.1.296.2      119.00 KB (121,856 bytes)
      7/26/2000 7:00:00 AM    Microsoft Corp., VERITAS Software
      c:\winnt\system32\dmdskres.dll
dmutil.dll  2195.23.297.2     42.27 KB (43,280 bytes) 7/26/2000 7:00:00
AM    VERITAS Software Corp.  c:\winnt\system32\dmutil.dll
ntmsapi.dll 5.00.1948.1 50.27 KB (51,472 bytes) 7/26/2000 7:00:00 AM
      Microsoft Corporation   c:\winnt\system32\ntmsapi.dll
dmdskmgr.dll      2195.1600.297.3   160.27 KB (164,112 bytes)
      7/26/2000 7:00:00 AM    Microsoft Corp., VERITAS Software
      c:\winnt\system32\dmdskmgr.dll
mycomput.dll      5.00.2134.1 107.77 KB (110,352 bytes)     7/26/2000
7:00:00 AM  Microsoft Corporation   c:\winnt\system32\mycomput.dll
mmcndmgr.dll      5.00.2178.1 815.27 KB (834,832 bytes)     7/26/2000
7:00:00 AM  Microsoft Corporation   c:\winnt\system32\mmcndmgr.dll
mfc42u.dll  6.00.8665.0 972.05 KB (995,384 bytes)     7/26/2000 7:00:00
AM    Microsoft Corporation   c:\winnt\system32\mfc42u.dll
mmc.exe     5.00.2153.1 589.27 KB (603,408 bytes)     7/26/2000 7:00:00
AM    Microsoft Corporation   c:\winnt\system32\mmc.exe
tapisrv.dll 5.00.2186.1 168.77 KB (172,816 bytes)     7/26/2000 7:00:00
AM    Microsoft Corporation   c:\winnt\system32\tapisrv.dll
```


Copyright Dell

```
msonsext.dll      9.0.3503    548.06 KB (561,210 bytes)     11/3/1999
4:38:34 PM  Microsoft Corporation
      c:\progra~1\common~1\micros~1\webfol~1\msonsext.dll
wzshlstb.dll      3.0 (32-bit)      24.07 KB (24,644 bytes) 4/19/2000
8:00:00 AM  WinZip Computing, Inc.  c:\progra~1\winzip\wzshlstb.dll
faxshell.dll      5.00.2134.1 8.27 KB (8,464 bytes)   7/26/2000 7:00:00
AM    Microsoft Corporation   c:\winnt\system32\faxshell.dll
msacm32.dll 5.00.2134.1 65.27 KB (66,832 bytes) 7/26/2000 7:00:00 AM
      Microsoft Corporation   c:\winnt\system32\msacm32.dll
avifil32.dll      5.00.2134.1 76.27 KB (78,096 bytes) 7/26/2000 7:00:00
AM    Microsoft Corporation   c:\winnt\system32\avifil32.dll
msvfw32.dll 5.00.2134.1 113.77 KB (116,496 bytes)     7/26/2000 7:00:00
AM    Microsoft Corporation   c:\winnt\system32\msvfw32.dll
docprop2.dll      5.00.2178.1 297.77 KB (304,912 bytes)     7/26/2000
7:00:00 AM  Microsoft Corporation   c:\winnt\system32\docprop2.dll
mydocs.dll  5.00.2920.0000    55.77 KB (57,104 bytes) 7/26/2000 7:00:00
AM    Microsoft Corporation   c:\winnt\system32\mydocs.dll
wininet.dll 5.00.3103.1000    456.77 KB (467,728 bytes)     7/26/2000
7:00:00 AM  Microsoft Corporation   c:\winnt\system32\wininet.dll
shdoclc.dll 5.00.3103.1000    324.50 KB (332,288 bytes)     7/26/2000
7:00:00 AM  Microsoft Corporation   c:\winnt\system32\shdoclc.dll
msi.dll     1.11.1314.0 1.72 MB (1,798,928 bytes)     7/26/2000 7:00:00
AM    Microsoft Corporation   c:\winnt\system32\msi.dll
urlmon.dll  5.00.3103.1000    440.77 KB (451,344 bytes)     7/26/2000
7:00:00 AM  Microsoft Corporation   c:\winnt\system32\urlmon.dll
ntshrui.dll 5.00.2134.1 46.77 KB (47,888 bytes) 7/26/2000 7:00:00 AM
      Microsoft Corporation   c:\winnt\system32\ntshrui.dll
linkinfo.dll      5.00.2134.1 15.77 KB (16,144 bytes) 7/26/2000 7:00:00
AM    Microsoft Corporation   c:\winnt\system32\linkinfo.dll
browselc.dll      5.00.3103.1000    34.50 KB (35,328 bytes) 7/26/2000
7:00:00 AM  Microsoft Corporation   c:\winnt\system32\browselc.dll
powrprof.dll      5.00.3103.1000    13.27 KB (13,584 bytes) 7/26/2000
7:00:00 AM  Microsoft Corporation   c:\winnt\system32\powrprof.dll
batmeter.dll      5.00.2920.0000    20.27 KB (20,752 bytes) 7/26/2000
7:00:00 AM  Microsoft Corporation   c:\winnt\system32\batmeter.dll
stobject.dll      5.00.2195.1387    79.27 KB (81,168 bytes) 7/26/2000
7:00:00 AM  Microsoft Corporation   c:\winnt\system32\stobject.dll
webcheck.dll      5.00.3103.1000    251.77 KB (257,808 bytes)
      7/26/2000 7:00:00 AM    Microsoft Corporation
      c:\winnt\system32\webcheck.dll
browseui.dll      5.00.3103.1000    788.77 KB (807,696 bytes)
      7/26/2000 7:00:00 AM    Microsoft Corporation
      c:\winnt\system32\browseui.dll
shdocvw.dll 5.00.3103.1000    1.05 MB (1,104,144 bytes)     7/26/2000
7:00:00 AM  Microsoft Corporation   c:\winnt\system32\shdocvw.dll
explorer.exe      5.00.3103.1000    237.27 KB (242,960 bytes)
      7/26/2000 7:00:00 AM    Microsoft Corporation
      c:\winnt\explorer.exe
tpcc_com_all.dll  1, 0, 0, 1  80.00 KB (81,920 bytes) 3/29/2002 1:34:10
PM          c:\inetpub\wwwroot\tpcc_c~2.dll
qlvipl.dll  Not Available     92.05 KB (94,262 bytes) 1/17/2003
11:10:28 AM Not Available     c:\winnt\system32\qlvipl.dll
dbmsqlgc.dll      2000.080.0760.00  32.56 KB (33,340 bytes) 1/20/2003
1:27:17 PM  Microsoft Corporation   c:\winnt\system32\dbmsqlgc.dll
```


Copyright Dell

```
dbnetlib.dll      2000.081.9031     60.00 KB (61,440 bytes) 9/27/2002
1:22:44 PM  Microsoft Corporation   c:\winnt\system32\dbnetlib.dll
ntwdblib.dll      2000.080.0194.00  268.06 KB (274,489 bytes)
      3/29/2002 1:07:29 PM    Microsoft Corporation
      c:\winnt\system32\ntwdblib.dll
tpcc_dblib.dll    Not Available     28.00 KB (28,672 bytes) 3/29/2002
1:34:08 PM  Not Available     c:\inetpub\wwwroot\tpcc_dblib.dll
tpcc_com.dll      Not Available     24.00 KB (24,576 bytes) 3/29/2002
1:34:09 PM  Not Available     c:\inetpub\wwwroot\tpcc_com.dll
tpcc.dll    0, 4, 0, 0  92.00 KB (94,208 bytes) 3/29/2002 1:34:08 PM
      Microsoft   c:\inetpub\wwwroot\tpcc.dll
iwrps.dll   5.00.2182.1 8.77 KB (8,976 bytes)   3/29/2002 6:39:35 AM
      Microsoft Corporation   c:\winnt\system32\inetsrv\iwrps.dll
wamps.dll   5.00.2159.1 7.27 KB (7,440 bytes)   3/29/2002 6:39:35 AM
      Microsoft Corporation   c:\winnt\system32\inetsrv\wamps.dll
wshom.ocx   5.1.0.4615  72.05 KB (73,776 bytes) 7/26/2000 7:00:00 AM
      Microsoft Corporation   c:\winnt\system32\wshom.ocx
wamregps.dll      5.00.2159.1 7.27 KB (7,440 bytes)   3/29/2002 6:39:34
AM    Microsoft Corporation   c:\winnt\system32\wamregps.dll
scrrun.dll  5.1.0.5010  144.05 KB (147,512 bytes)     7/26/2000 7:00:00
AM    Microsoft Corporation   c:\winnt\system32\scrrun.dll
iisext.dll  5.00.2195.1613    41.77 KB (42,768 bytes) 3/29/2002 6:39:29
AM    Microsoft Corporation   c:\winnt\system32\iisext.dll
adsiis.dll  5.00.2195.1613    238.77 KB (244,496 bytes)     3/29/2002
6:39:29 AM  Microsoft Corporation   c:\winnt\system32\adsiis.dll
vbscript.dll      5.1.0.5010  428.06 KB (438,330 bytes)     7/26/2000
7:00:00 AM  Microsoft Corporation   c:\winnt\system32\vbscript.dll
asptxn.dll  5.00.0954   29.77 KB (30,480 bytes) 3/29/2002 6:39:31 AM
      Microsoft Corporation   c:\winnt\system32\inetsrv\asptxn.dll
asp.dll     5.00.0984   322.27 KB (330,000 bytes)     3/29/2002 6:39:31
AM    Microsoft Corporation   c:\winnt\system32\inetsrv\asp.dll
mfc42.dll   6.00.8665.0 972.05 KB (995,383 bytes)     7/26/2000 7:00:00
AM    Microsoft Corporation   c:\winnt\system32\mfc42.dll
wam.dll     5.00.0984   70.77 KB (72,464 bytes) 3/29/2002 6:39:33 AM
      Microsoft Corporation   c:\winnt\system32\inetsrv\wam.dll
odbcint.dll 3.520.9001.0      88.00 KB (90,112 bytes) 1/20/2003 1:27:07
PM    Microsoft Corporation   c:\winnt\system32\odbcint.dll
comdlg32.dll      5.00.3103.1000    236.77 KB (242,448 bytes)
      7/26/2000 7:00:00 AM    Microsoft Corporation
      c:\winnt\system32\comdlg32.dll
odbc32.dll  3.520.9030.0      196.00 KB (200,704 bytes)     1/20/2003
1:27:07 PM  Microsoft Corporation   c:\winnt\system32\odbc32.dll
comsvcs.dll 2000.2.3449.0     1.22 MB (1,277,712 bytes)     3/29/2002
6:39:25 AM  Microsoft Corporation   c:\winnt\system32\comsvcs.dll
iislog.dll  5.00.0984   75.77 KB (77,584 bytes) 3/29/2002 6:39:28 AM
      Microsoft Corporation   c:\winnt\system32\inetsrv\iislog.dll
ntlsapi.dll 5.00.2134.1 6.77 KB (6,928 bytes)   7/26/2000 7:00:00 AM
      Microsoft Corporation   c:\winnt\system32\ntlsapi.dll
httpext.dll 0.9.3940.2  418.27 KB (428,304 bytes)     3/29/2002 6:39:28
AM    Microsoft Corporation   c:\winnt\system32\inetsrv\httpext.dll
fpexedll.dll      4.0.2.4022  20.06 KB (20,541 bytes) 3/29/2002 6:39:24
AM    Microsoft Corporation   c:\program files\common files\microsoft
shared\web server extensions\40\bin\fpexedll.dll
md5filt.dll 5.00.0984   32.77 KB (33,552 bytes) 3/29/2002 6:39:32 AM
      Microsoft Corporation   c:\winnt\system32\inetsrv\md5filt.dll
```


Copyright Dell

```
gzip.dll    5.00.0984   30.27 KB (30,992 bytes) 3/29/2002 6:39:32 AM
      Microsoft Corporation   c:\winnt\system32\inetsrv\gzip.dll
compfilt.dll      5.00.0984   22.27 KB (22,800 bytes) 3/29/2002 6:39:31
AM    Microsoft Corporation   c:\winnt\system32\inetsrv\compfilt.dll
sspifilt.dll      5.00.0984   43.27 KB (44,304 bytes) 3/29/2002 6:39:32
AM    Microsoft Corporation   c:\winnt\system32\inetsrv\sspifilt.dll
iscomlog.dll      5.00.0984   24.77 KB (25,360 bytes) 3/29/2002 6:39:28
AM    Microsoft Corporation   c:\winnt\system32\inetsrv\iscomlog.dll
lonsint.dll 5.00.0984   11.77 KB (12,048 bytes) 3/29/2002 6:39:29 AM
      Microsoft Corporation   c:\winnt\system32\inetsrv\lonsint.dll
inetsloc.dll      5.00.0984   20.27 KB (20,752 bytes) 3/29/2002 6:39:29
AM    Microsoft Corporation   c:\winnt\system32\inetsloc.dll
iisfecnv.dll      5.00.0984   7.27 KB (7,440 bytes)   3/29/2002 6:39:34
AM    Microsoft Corporation   c:\winnt\system32\inetsrv\iisfecnv.dll
isatq.dll   5.00.0984   60.27 KB (61,712 bytes) 3/29/2002 6:39:30 AM
      Microsoft Corporation   c:\winnt\system32\inetsrv\isatq.dll
infocomm.dll      5.00.0984   229.77 KB (235,280 bytes)     3/29/2002
6:39:28 AM  Microsoft Corporation
      c:\winnt\system32\inetsrv\infocomm.dll
w3svc.dll   5.00.0984   342.77 KB (350,992 bytes)     3/29/2002 6:39:33
AM    Microsoft Corporation   c:\winnt\system32\inetsrv\w3svc.dll
security.dll      5.00.2154.1 5.77 KB (5,904 bytes)   7/26/2000 7:00:00
AM    Microsoft Corporation   c:\winnt\system32\security.dll
svcext.dll  5.00.0984   39.77 KB (40,720 bytes) 3/29/2002 6:39:29 AM
      Microsoft Corporation   c:\winnt\system32\inetsrv\svcext.dll
admexs.dll  5.00.0984   27.77 KB (28,432 bytes) 3/29/2002 6:39:28 AM
      Microsoft Corporation   c:\winnt\system32\inetsrv\admexs.dll
wamreg.dll  5.00.0984   45.77 KB (46,864 bytes) 3/29/2002 6:39:33 AM
      Microsoft Corporation   c:\winnt\system32\inetsrv\wamreg.dll
metadata.dll      5.00.0984   68.27 KB (69,904 bytes) 3/29/2002 6:39:29
AM    Microsoft Corporation   c:\winnt\system32\inetsrv\metadata.dll
iismap.dll  5.00.0984   55.77 KB (57,104 bytes) 3/29/2002 6:39:29 AM
      Microsoft Corporation   c:\winnt\system32\iismap.dll
nsepm.dll   5.00.0984   43.27 KB (44,304 bytes) 3/29/2002 6:39:29 AM
      Microsoft Corporation   c:\winnt\system32\inetsrv\nsepm.dll
admwprox.dll      5.00.0984   31.77 KB (32,528 bytes) 3/29/2002 6:39:34
AM    Microsoft Corporation   c:\winnt\system32\admwprox.dll
coadmin.dll 5.00.0984   39.27 KB (40,208 bytes) 3/29/2002 6:39:30 AM
      Microsoft Corporation   c:\winnt\system32\inetsrv\coadmin.dll
iisadmin.dll      5.00.0984   15.27 KB (15,632 bytes) 3/29/2002 6:39:28
AM    Microsoft Corporation   c:\winnt\system32\inetsrv\iisadmin.dll
rpcref.dll  5.00.0984   4.27 KB (4,368 bytes)   3/29/2002 6:39:29 AM
      Microsoft Corporation   c:\winnt\system32\inetsrv\rpcref.dll
iisrtl.dll  5.00.0984   120.27 KB (123,152 bytes)     3/29/2002 6:39:29
AM    Microsoft Corporation   c:\winnt\system32\iisrtl.dll
inetinfo.exe      5.00.0984   14.27 KB (14,608 bytes) 3/29/2002 6:39:28
AM    Microsoft Corporation   c:\winnt\system32\inetsrv\inetinfo.exe
netui1.dll  5.00.2134.1 210.27 KB (215,312 bytes)     7/26/2000 7:00:00
AM    Microsoft Corporation   c:\winnt\system32\netui1.dll
netui0.dll  5.00.2134.1 70.27 KB (71,952 bytes) 7/26/2000 7:00:00 AM
      Microsoft Corporation   c:\winnt\system32\netui0.dll
ntlanman.dll      5.00.2157.1 35.27 KB (36,112 bytes) 7/26/2000 7:00:00
AM    Microsoft Corporation   c:\winnt\system32\ntlanman.dll
wshnetbs.dll      5.00.2134.1 7.77 KB (7,952 bytes)   7/26/2000 7:00:00
AM    Microsoft Corporation   c:\winnt\system32\wshnetbs.dll
```


Copyright Dell

```
rapilib.dll 5.00.2167.1 25.27 KB (25,872 bytes) 7/26/2000 7:00:00 AM
      Microsoft Corporation   c:\winnt\system32\rapilib.dll
rsvpsp.dll  5.00.2167.1 74.77 KB (76,560 bytes) 7/26/2000 7:00:00 AM
      Microsoft Corporation   c:\winnt\system32\rsvpsp.dll
ntmarta.dll 5.00.2158.1 98.77 KB (101,136 bytes)      7/26/2000 7:00:00
AM    Microsoft Corporation   c:\winnt\system32\ntmarta.dll
provthrd.dll      1.50.1085.0000    68.07 KB (69,708 bytes) 3/29/2002
12:38:49 PM Microsoft Corporation   c:\winnt\system32\wbem\provthrd.dll
ntevt.dll   1.50.1085.0000    192.06 KB (196,669 bytes)     7/26/2000
7:00:00 AM  Microsoft Corporation   c:\winnt\system32\wbem\ntevt.dll
perfos.dll  5.00.2155.1 21.27 KB (21,776 bytes) 7/26/2000 7:00:00 AM
      Microsoft Corporation   c:\winnt\system32\perfos.dll
psapi.dll   5.00.2134.1 28.27 KB (28,944 bytes) 7/26/2000 7:00:00 AM
      Microsoft Corporation   c:\winnt\system32\psapi.dll
framedyn.dll      1.50.1085.0000    164.05 KB (167,992 bytes)
      7/26/2000 7:00:00 AM    Microsoft Corporation
      c:\winnt\system32\wbem\framedyn.dll
cimwin32.dll      1.50.1085.0016    1.02 MB (1,073,232 bytes)
      7/26/2000 7:00:00 AM    Microsoft Corporation
      c:\winnt\system32\wbem\cimwin32.dll
wbemsvc.dll 1.50.1085.0007    40.07 KB (41,036 bytes) 7/26/2000 7:00:00
AM    Microsoft Corporation   c:\winnt\system32\wbem\wbemsvc.dll
wbemess.dll 1.50.1085.0007    364.07 KB (372,804 bytes)     7/26/2000
7:00:00 AM  Microsoft Corporation   c:\winnt\system32\wbem\wbemess.dll
fastprox.dll      1.50.1085.0007    144.08 KB (147,536 bytes)
      7/26/2000 7:00:00 AM    Microsoft Corporation
      c:\winnt\system32\wbem\fastprox.dll
wbemcore.dll      1.50.1085.0008    628.07 KB (643,140 bytes)
      7/26/2000 7:00:00 AM    Microsoft Corporation
      c:\winnt\system32\wbem\wbemcore.dll
wbemcomn.dll      1.50.1085.0007    692.07 KB (708,675 bytes)
      7/26/2000 7:00:00 AM    Microsoft Corporation
      c:\winnt\system32\wbem\wbemcomn.dll
winmgmt.exe 1.50.1085.0009    192.08 KB (196,685 bytes)     7/26/2000
7:00:00 AM  Microsoft Corporation   c:\winnt\system32\wbem\winmgmt.exe
msidle.dll  5.00.2920.0000    6.27 KB (6,416 bytes)   7/26/2000 7:00:00
AM    Microsoft Corporation   c:\winnt\system32\msidle.dll
mstask.exe  4.71.2137.1 115.27 KB (118,032 bytes)     3/29/2002
12:38:49 PM Microsoft Corporation   c:\winnt\system32\mstask.exe
regsvc.exe  5.00.2195.31      65.27 KB (66,832 bytes) 7/26/2000 7:00:00
AM    Microsoft Corporation   c:\winnt\system32\regsvc.exe
rasdlg.dll  5.00.2194.1 514.27 KB (526,608 bytes)     7/26/2000 7:00:00
AM    Microsoft Corporation   c:\winnt\system32\rasdlg.dll
netcfgx.dll 5.00.2195.1618    533.77 KB (546,576 bytes)     7/26/2000
7:00:00 AM  Microsoft Corporation   c:\winnt\system32\netcfgx.dll
rasmans.dll 5.00.2195.27      146.77 KB (150,288 bytes)     7/26/2000
7:00:00 AM  Microsoft Corporation   c:\winnt\system32\rasmans.dll
wmi.dll     5.00.2191.1 6.27 KB (6,416 bytes)   7/26/2000 7:00:00 AM
      Microsoft Corporation   c:\winnt\system32\wmi.dll
netshell.dll      5.00.2195.1600    456.77 KB (467,728 bytes)
      7/26/2000 7:00:00 AM    Microsoft Corporation
      c:\winnt\system32\netshell.dll
netman.dll  5.00.2195.1600    89.27 KB (91,408 bytes) 7/26/2000 7:00:00
AM    Microsoft Corporation   c:\winnt\system32\netman.dll
```


Copyright Dell

```
sens.dll    5.00.2163.1 36.77 KB (37,648 bytes) 7/26/2000 7:00:00 AM
      Microsoft Corporation   c:\winnt\system32\sens.dll
es.dll      1999.9.3422.21    231.77 KB (237,328 bytes)     7/26/2000
7:00:00 AM  Microsoft Corporation   c:\winnt\system32\es.dll
mtxoci.dll  1999.9.3421.3     109.27 KB (111,888 bytes)     3/29/2002
6:39:39 AM  Microsoft Corporation   c:\winnt\system32\mtxoci.dll
resutils.dll      5.00.2195.1613    39.77 KB (40,720 bytes) 7/26/2000
7:00:00 AM  Microsoft Corporation   c:\winnt\system32\resutils.dll
clusapi.dll 5.00.2195.1613    54.27 KB (55,568 bytes) 7/26/2000 7:00:00
AM    Microsoft Corporation   c:\winnt\system32\clusapi.dll
msvcp50.dll 5.00.7051   552.50 KB (565,760 bytes)     7/26/2000 7:00:00
AM    Microsoft Corporation   c:\winnt\system32\msvcp50.dll
xolehlp.dll 1999.9.3421.3     17.27 KB (17,680 bytes) 3/29/2002 6:39:39
AM    Microsoft Corporation   c:\winnt\system32\xolehlp.dll
msdtclog.dll      1999.9.3421.3     89.77 KB (91,920 bytes) 3/29/2002
6:39:39 AM  Microsoft Corporation   c:\winnt\system32\msdtclog.dll
mtxclu.dll  1999.9.3421.3     50.27 KB (51,472 bytes) 7/26/2000 7:00:00
AM    Microsoft Corporation   c:\winnt\system32\mtxclu.dll
msdtcprx.dll      2000.2.3449.0     625.77 KB (640,784 bytes)
      3/29/2002 6:39:27 AM    Microsoft Corporation
      c:\winnt\system32\msdtcprx.dll
txfaux.dll  1999.9.3422.24    341.27 KB (349,456 bytes)     3/29/2002
6:39:39 AM  Microsoft Corporation   c:\winnt\system32\txfaux.dll
msdtctm.dll 2000.2.3449.0     1.07 MB (1,120,528 bytes)     3/29/2002
6:39:26 AM  Microsoft Corporation   c:\winnt\system32\msdtctm.dll
msdtc.exe   1999.9.3421.3     6.77 KB (6,928 bytes)   3/29/2002 6:39:39
AM    Microsoft Corporation   c:\winnt\system32\msdtc.exe
rasadhlp.dll      5.00.2168.1 7.27 KB (7,440 bytes)   7/26/2000 7:00:00
AM    Microsoft Corporation   c:\winnt\system32\rasadhlp.dll
winrnr.dll  5.00.2160.1 18.77 KB (19,216 bytes) 7/26/2000 7:00:00 AM
      Microsoft Corporation   c:\winnt\system32\winrnr.dll
rnr20.dll   5.00.2195.1207    35.77 KB (36,624 bytes) 7/26/2000 7:00:00
AM    Microsoft Corporation   c:\winnt\system32\rnr20.dll
wshtcpip.dll      5.00.2134.1 17.27 KB (17,680 bytes) 7/26/2000 7:00:00
AM    Microsoft Corporation   c:\winnt\system32\wshtcpip.dll
dhcpcsvc.dll      5.00.2153.1 88.77 KB (90,896 bytes) 7/26/2000 7:00:00
AM    Microsoft Corporation   c:\winnt\system32\dhcpcsvc.dll
tapi32.dll  5.00.2182.1 123.27 KB (126,224 bytes)     7/26/2000 7:00:00
AM    Microsoft Corporation   c:\winnt\system32\tapi32.dll
rasman.dll  5.00.2188.1 54.77 KB (56,080 bytes) 7/26/2000 7:00:00 AM
      Microsoft Corporation   c:\winnt\system32\rasman.dll
rasapi32.dll      5.00.2188.1 189.77 KB (194,320 bytes)     7/26/2000
7:00:00 AM  Microsoft Corporation   c:\winnt\system32\rasapi32.dll
iphlpapi.dll      5.00.2173.2 67.77 KB (69,392 bytes) 7/26/2000 7:00:00
AM    Microsoft Corporation   c:\winnt\system32\iphlpapi.dll
msafd.dll   5.00.2195.1614    102.77 KB (105,232 bytes)     7/26/2000
7:00:00 AM  Microsoft Corporation   c:\winnt\system32\msafd.dll
rpcss.dll   5.00.2195.1600    229.27 KB (234,768 bytes)     7/26/2000
7:00:00 AM  Microsoft Corporation   c:\winnt\system32\rpcss.dll
svchost.exe 5.00.2134.1 7.77 KB (7,952 bytes)   7/26/2000 7:00:00 AM
      Microsoft Corporation   c:\winnt\system32\svchost.exe
iissuba.dll 5.00.0984   9.77 KB (10,000 bytes)  7/26/2000 7:00:00 AM
      Microsoft Corporation   c:\winnt\system32\iissuba.dll
scecli.dll  5.00.2191.1 105.27 KB (107,792 bytes)     7/26/2000 7:00:00
AM    Microsoft Corporation   c:\winnt\system32\scecli.dll
```


Copyright Dell

```
atl.dll     3.00.8449   57.56 KB (58,938 bytes) 7/26/2000 7:00:00 AM
      Microsoft Corporation   c:\winnt\system32\atl.dll
certcli.dll 5.00.2175.1 132.27 KB (135,440 bytes)     7/26/2000 7:00:00
AM    Microsoft Corporation   c:\winnt\system32\certcli.dll
esent.dll   6.0.3940.4  1.08 MB (1,135,888 bytes)     7/26/2000 7:00:00
AM    Microsoft Corporation   c:\winnt\system32\esent.dll
mswsock.dll 5.00.2195.1207    62.77 KB (64,272 bytes) 7/26/2000 7:00:00
AM    Microsoft Corporation   c:\winnt\system32\mswsock.dll
ntdsatq.dll 5.00.2195.1284    31.27 KB (32,016 bytes) 7/26/2000 7:00:00
AM    Microsoft Corporation   c:\winnt\system32\ntdsatq.dll
ntdsa.dll   5.00.2195.1600    987.27 KB (1,010,960 bytes)   7/26/2000
7:00:00 AM  Microsoft Corporation   c:\winnt\system32\ntdsa.dll
kdcsvc.dll  5.00.2195.1284    133.77 KB (136,976 bytes)     7/26/2000
7:00:00 AM  Microsoft Corporation   c:\winnt\system32\kdcsvc.dll
sfmapi.dll  5.00.2134.1 38.77 KB (39,696 bytes) 7/26/2000 7:00:00 AM
      Microsoft Corporation   c:\winnt\system32\sfmapi.dll
rtutils.dll 5.00.2168.1 43.77 KB (44,816 bytes) 7/26/2000 7:00:00 AM
      Microsoft Corporation   c:\winnt\system32\rtutils.dll
adsldpc.dll 5.00.2195.1600    125.77 KB (128,784 bytes)     7/26/2000
7:00:00 AM  Microsoft Corporation   c:\winnt\system32\adsldpc.dll
activeds.dll      5.00.2172.1 172.77 KB (176,912 bytes)     7/26/2000
7:00:00 AM  Microsoft Corporation   c:\winnt\system32\activeds.dll
mprapi.dll  5.00.2181.1 79.27 KB (81,168 bytes) 7/26/2000 7:00:00 AM
      Microsoft Corporation   c:\winnt\system32\mprapi.dll
rassfm.dll  5.00.2195.1179    21.27 KB (21,776 bytes) 7/26/2000 7:00:00
AM    Microsoft Corporation   c:\winnt\system32\rassfm.dll
mpr.dll     5.00.2195.1340    53.27 KB (54,544 bytes) 7/26/2000 7:00:00
AM    Microsoft Corporation   c:\winnt\system32\mpr.dll
schannel.dll      5.00.2195.1163    137.27 KB (140,560 bytes)
      7/26/2000 7:00:00 AM    Microsoft Corporation
      c:\winnt\system32\schannel.dll
netlogon.dll      5.00.2195.1600    348.27 KB (356,624 bytes)
      7/26/2000 7:00:00 AM    Microsoft Corporation
      c:\winnt\system32\netlogon.dll
msv1_0.dll  5.00.2195.1620    92.77 KB (94,992 bytes) 7/26/2000 7:00:00
AM    Microsoft Corporation   c:\winnt\system32\msv1_0.dll
kerberos.dll      5.00.2195.1378    197.77 KB (202,512 bytes)
      7/26/2000 7:00:00 AM    Microsoft Corporation
      c:\winnt\system32\kerberos.dll
msprivs.dll 5.00.2154.1 41.50 KB (42,496 bytes) 7/26/2000 7:00:00 AM
      Microsoft Corporation   c:\winnt\system32\msprivs.dll
samsrv.dll  5.00.2195.1609    343.27 KB (351,504 bytes)     7/26/2000
7:00:00 AM  Microsoft Corporation   c:\winnt\system32\samsrv.dll
lsasrv.dll  5.00.2195.1620    475.27 KB (486,672 bytes)     7/26/2000
7:00:00 AM  Microsoft Corporation   c:\winnt\system32\lsasrv.dll
lsass.exe   5.00.2195.1620    32.77 KB (33,552 bytes) 7/26/2000 7:00:00
AM    Microsoft Corporation   c:\winnt\system32\lsass.exe
wmicore.dll 5.00.2178.1 70.77 KB (72,464 bytes) 7/26/2000 7:00:00 AM
      Microsoft Corporation   c:\winnt\system32\wmicore.dll
seclogon.dll      5.00.2135.1 15.77 KB (16,144 bytes) 7/26/2000 7:00:00
AM    Microsoft Corporation   c:\winnt\system32\seclogon.dll
psbase.dll  5.00.2195.1600    111.77 KB (114,448 bytes)     7/26/2000
7:00:00 AM  Microsoft Corporation   c:\winnt\system32\psbase.dll
cryptsvc.dll      5.00.2181.1 61.77 KB (63,248 bytes) 7/26/2000 7:00:00
AM    Microsoft Corporation   c:\winnt\system32\cryptsvc.dll
```


Copyright Dell

```
cryptdll.dll      5.00.2135.1 41.27 KB (42,256 bytes) 7/26/2000 7:00:00
AM    Microsoft Corporation   c:\winnt\system32\cryptdll.dll
wkssvc.dll  5.00.2195.1175    95.27 KB (97,552 bytes) 7/26/2000 7:00:00
AM    Microsoft Corporation   c:\winnt\system32\wkssvc.dll
srvsvc.dll  5.00.2178.1 79.27 KB (81,168 bytes) 7/26/2000 7:00:00 AM
      Microsoft Corporation   c:\winnt\system32\srvsvc.dll
cfgmgr32.dll      5.00.2134.1 16.77 KB (17,168 bytes) 7/26/2000 7:00:00
AM    Microsoft Corporation   c:\winnt\system32\cfgmgr32.dll
dmserver.dll      2195.23.297.2     11.77 KB (12,048 bytes) 7/26/2000
7:00:00 AM  VERITAS Software Corp.  c:\winnt\system32\dmserver.dll
winsta.dll  5.00.2195.32      36.27 KB (37,136 bytes) 7/26/2000 7:00:00
AM    Microsoft Corporation   c:\winnt\system32\winsta.dll
icmp.dll    5.00.2134.1 7.27 KB (7,440 bytes)   7/26/2000 7:00:00 AM
      Microsoft Corporation   c:\winnt\system32\icmp.dll
lmhsvc.dll  5.00.2134.1 9.27 KB (9,488 bytes)   7/26/2000 7:00:00 AM
      Microsoft Corporation   c:\winnt\system32\lmhsvc.dll
eventlog.dll      5.00.2178.1 43.77 KB (44,816 bytes) 7/26/2000 7:00:00
AM    Microsoft Corporation   c:\winnt\system32\eventlog.dll
ntdsapi.dll 5.00.2160.1 56.27 KB (57,616 bytes) 7/26/2000 7:00:00 AM
      Microsoft Corporation   c:\winnt\system32\ntdsapi.dll
scesrv.dll  5.00.2188.1 225.77 KB (231,184 bytes)     7/26/2000 7:00:00
AM    Microsoft Corporation   c:\winnt\system32\scesrv.dll
umpnpmgr.dll      5.00.2182.1 86.27 KB (88,336 bytes) 7/26/2000 7:00:00
AM    Microsoft Corporation   c:\winnt\system32\umpnpmgr.dll
services.exe      5.00.2134.1 86.77 KB (88,848 bytes) 7/26/2000 7:00:00
AM    Microsoft Corporation   c:\winnt\system32\services.exe
clbcatq.dll 2000.2.3449.0     496.27 KB (508,176 bytes)     3/29/2002
6:39:25 AM  Microsoft Corporation   c:\winnt\system32\clbcatq.dll
oleaut32.dll      2.40.4514   600.27 KB (614,672 bytes)     7/26/2000
7:00:00 AM  Microsoft Corporation   c:\winnt\system32\oleaut32.dll
cscui.dll   5.00.2195.1387    227.27 KB (232,720 bytes)     7/26/2000
7:00:00 AM  Microsoft Corporation   c:\winnt\system32\cscui.dll
winspool.drv      5.00.2195.1340    109.77 KB (112,400 bytes)
      7/26/2000 7:00:00 AM    Microsoft Corporation
      c:\winnt\system32\winspool.drv
winscard.dll      5.00.2134.1 77.27 KB (79,120 bytes) 7/26/2000 7:00:00
AM    Microsoft Corporation   c:\winnt\system32\winscard.dll
wlnotify.dll      5.00.2195.1163    53.27 KB (54,544 bytes) 7/26/2000
7:00:00 AM  Microsoft Corporation   c:\winnt\system32\wlnotify.dll
cscdll.dll  5.00.2195.1600    98.27 KB (100,624 bytes)      7/26/2000
7:00:00 AM  Microsoft Corporation   c:\winnt\system32\cscdll.dll
lz32.dll    5.00.2134.1 9.77 KB (10,000 bytes)  7/26/2000 7:00:00 AM
      Microsoft Corporation   c:\winnt\system32\lz32.dll
version.dll 5.00.2134.1 15.77 KB (16,144 bytes) 7/26/2000 7:00:00 AM
      Microsoft Corporation   c:\winnt\system32\version.dll
rsabase.dll 5.00.2195.1391    129.27 KB (132,368 bytes)     7/26/2000
7:00:00 AM  Microsoft Corporation   c:\winnt\system32\rsabase.dll
mscat32.dll 5.131.2134.1      7.77 KB (7,952 bytes)   7/26/2000 7:00:00
AM    Microsoft Corporation   c:\winnt\system32\mscat32.dll
ole32.dll   5.00.2195.1607    965.27 KB (988,432 bytes)     7/26/2000
7:00:00 AM  Microsoft Corporation   c:\winnt\system32\ole32.dll
imagehlp.dll      5.00.2195.1 125.27 KB (128,272 bytes)     7/26/2000
7:00:00 AM  Microsoft Corporation   c:\winnt\system32\imagehlp.dll
msasn1.dll  5.00.2134.1 51.27 KB (52,496 bytes) 7/26/2000 7:00:00 AM
      Microsoft Corporation   c:\winnt\system32\msasn1.dll
```


Copyright Dell

```
crypt32.dll 5.131.2195.1340   464.77 KB (475,920 bytes)     7/26/2000
7:00:00 AM  Microsoft Corporation   c:\winnt\system32\crypt32.dll
wintrust.dll      5.131.2143.1      162.27 KB (166,160 bytes)
      7/26/2000 7:00:00 AM    Microsoft Corporation
      c:\winnt\system32\wintrust.dll
setupapi.dll      5.00.2195.1608    552.77 KB (566,032 bytes)
      7/26/2000 7:00:00 AM    Microsoft Corporation
      c:\winnt\system32\setupapi.dll
winmm.dll   5.00.2161.1 184.77 KB (189,200 bytes)     7/26/2000 7:00:00
AM    Microsoft Corporation   c:\winnt\system32\winmm.dll
comctl32.dll      5.81  537.77 KB (550,672 bytes)     7/26/2000 7:00:00
AM    Microsoft Corporation   c:\winnt\system32\comctl32.dll
shlwapi.dll 5.00.3103.1000    282.27 KB (289,040 bytes)     7/26/2000
7:00:00 AM  Microsoft Corporation   c:\winnt\system32\shlwapi.dll
shell32.dll 5.00.3103.1000    2.25 MB (2,358,032 bytes)     7/26/2000
7:00:00 AM  Microsoft Corporation   c:\winnt\system32\shell32.dll
msgina.dll  5.00.2195.1600    323.27 KB (331,024 bytes)     7/26/2000
7:00:00 AM  Microsoft Corporation   c:\winnt\system32\msgina.dll
wsock32.dll 5.00.2195.1207    21.27 KB (21,776 bytes) 7/26/2000 7:00:00
AM    Microsoft Corporation   c:\winnt\system32\wsock32.dll
dnsapi.dll  5.00.2195.1600    127.77 KB (130,832 bytes)     7/26/2000
7:00:00 AM  Microsoft Corporation   c:\winnt\system32\dnsapi.dll
wldap32.dll 5.00.2195.1175    155.27 KB (158,992 bytes)     7/26/2000
7:00:00 AM  Microsoft Corporation   c:\winnt\system32\wldap32.dll
ws2help.dll 5.00.2134.1 17.77 KB (18,192 bytes) 7/26/2000 7:00:00 AM
      Microsoft Corporation   c:\winnt\system32\ws2help.dll
ws2_32.dll  5.00.2195.1340    68.77 KB (70,416 bytes) 7/26/2000 7:00:00
AM    Microsoft Corporation   c:\winnt\system32\ws2_32.dll
samlib.dll  5.00.2160.1 46.27 KB (47,376 bytes) 7/26/2000 7:00:00 AM
      Microsoft Corporation   c:\winnt\system32\samlib.dll
netrap.dll  5.00.2134.1 11.27 KB (11,536 bytes) 7/26/2000 7:00:00 AM
      Microsoft Corporation   c:\winnt\system32\netrap.dll
netapi32.dll      5.00.2195.1600    303.27 KB (310,544 bytes)
      7/26/2000 7:00:00 AM    Microsoft Corporation
      c:\winnt\system32\netapi32.dll
profmap.dll 5.00.2181.1 29.27 KB (29,968 bytes) 7/26/2000 7:00:00 AM
      Microsoft Corporation   c:\winnt\system32\profmap.dll
secur32.dll 5.00.2195.1600    47.27 KB (48,400 bytes) 7/26/2000 7:00:00
AM    Microsoft Corporation   c:\winnt\system32\secur32.dll
sfc.dll     5.00.2195.1618    90.05 KB (92,216 bytes) 7/26/2000 7:00:00
AM    Microsoft Corporation   c:\winnt\system32\sfc.dll
nddeapi.dll 5.00.2137.1 15.27 KB (15,632 bytes) 7/26/2000 7:00:00 AM
      Microsoft Corporation   c:\winnt\system32\nddeapi.dll
userenv.dll 5.00.2195.1600    359.27 KB (367,888 bytes)     7/26/2000
7:00:00 AM  Microsoft Corporation   c:\winnt\system32\userenv.dll
user32.dll  5.00.2195.1600    392.77 KB (402,192 bytes)     7/26/2000
7:00:00 AM  Microsoft Corporation   c:\winnt\system32\user32.dll
gdi32.dll   5.00.2195.1340    228.77 KB (234,256 bytes)     7/26/2000
7:00:00 AM  Microsoft Corporation   c:\winnt\system32\gdi32.dll
rpcrt4.dll  5.00.2195.1615    436.27 KB (446,736 bytes)     7/26/2000
7:00:00 AM  Microsoft Corporation   c:\winnt\system32\rpcrt4.dll
advapi32.dll      5.00.2195.1600    349.27 KB (357,648 bytes)
      7/26/2000 7:00:00 AM    Microsoft Corporation
      c:\winnt\system32\advapi32.dll
```


Copyright Dell

```
kernel32.dll      5.00.2195.1600    713.27 KB (730,384 bytes)
      7/26/2000 7:00:00 AM    Microsoft Corporation
      c:\winnt\system32\kernel32.dll
msvcrt.dll  6.10.8637.0 288.09 KB (295,000 bytes)     7/26/2000 7:00:00
AM    Microsoft Corporation   c:\winnt\system32\msvcrt.dll
winlogon.exe      5.00.2195.1600    172.77 KB (176,912 bytes)
      7/26/2000 7:00:00 AM    Microsoft Corporation
      c:\winnt\system32\winlogon.exe
sfcfiles.dll      5.00.2195.1 973.27 KB (996,624 bytes)     7/26/2000
7:00:00 AM  Microsoft Corporation   c:\winnt\system32\sfcfiles.dll
ntdll.dll   5.00.2195.1600    475.27 KB (486,672 bytes)     7/26/2000
7:00:00 AM  Microsoft Corporation   c:\winnt\system32\ntdll.dll
smss.exe    5.00.2195.31      44.27 KB (45,328 bytes) 7/26/2000 7:00:00
AM    Microsoft Corporation   c:\winnt\system32\smss.exe

[Services]

Display Name      Name  State Start Mode  Service Type      Path  Error
Control     Start Name  Tag ID
Alerter     Alerter     Stopped     Manual      Share Process
      c:\winnt\system32\services.exe      Normal      LocalSystem 0
Application Management  AppMgmt     Stopped     Manual      Share
Process     c:\winnt\system32\services.exe      Normal      LocalSystem
      0
Computer Browser  Browser     Stopped     Manual      Share Process
      c:\winnt\system32\services.exe      Normal      LocalSystem 0
Indexing Service  cisvc Stopped     Manual      Share Process
      c:\winnt\system32\cisvc.exe   Normal      LocalSystem 0
ClipBook    ClipSrv     Stopped     Manual      Own Process
      c:\winnt\system32\clipsrv.exe Normal      LocalSystem 0
Distributed File System Dfs   Stopped     Manual      Own Process
      c:\winnt\system32\dfssvc.exe  Normal      LocalSystem 0
DHCP Client Dhcp  Stopped     Manual      Share Process
      c:\winnt\system32\services.exe      Normal      LocalSystem 0
Logical Disk Manager Administrative Service     dmadmin     Stopped
      Manual      Share Process     c:\winnt\system32\dmadmin.exe /com
      Normal      LocalSystem 0
Logical Disk Manager    dmserver    Running     Auto  Share Process
      c:\winnt\system32\services.exe      Normal      LocalSystem 0
DNS Client  Dnscache    Stopped     Manual      Share Process
      c:\winnt\system32\services.exe      Normal      LocalSystem 0
Event Log   Eventlog    Running     Auto  Share Process
      c:\winnt\system32\services.exe      Normal      LocalSystem 0
COM+ Event System EventSystem Running     Manual      Share Process
      c:\winnt\system32\svchost.exe -k netsvcs  Normal      LocalSystem
      0
Fax Service Fax   Stopped     Manual      Own Process
      c:\winnt\system32\faxsvc.exe  Normal      LocalSystem 0
IIS Admin Service IISADMIN    Running     Auto  Share Process
      c:\winnt\system32\inetsrv\inetinfo.exe    Normal      LocalSystem
      0
Intersite Messaging     IsmServ     Stopped     Disabled    Own Process
      c:\winnt\system32\ismserv.exe Normal      LocalSystem 0
Kerberos Key Distribution Center    kdc   Stopped     Disabled    Share
Process     c:\winnt\system32\lsass.exe   Normal      LocalSystem 0
```


Copyright Dell

```
Server      lanmanserver      Running     Auto  Share Process
      c:\winnt\system32\services.exe      Normal      LocalSystem 0
Workstation lanmanworkstation Running     Auto  Share Process
      c:\winnt\system32\services.exe      Normal      LocalSystem 0
License Logging Service LicenseService    Stopped     Manual      Own
Process     c:\winnt\system32\llssrv.exe  Normal      LocalSystem 0
TCP/IP NetBIOS Helper Service LmHosts     Running     Auto  Share
Process     c:\winnt\system32\services.exe      Normal      LocalSystem
      0
Messenger   Messenger   Stopped     Manual      Share Process
      c:\winnt\system32\services.exe      Normal      LocalSystem 0
NetMeeting Remote Desktop Sharing   mnmsrvc     Stopped     Manual
      Own Process c:\winnt\system32\mnmsrvc.exe Normal      LocalSystem
      0
Distributed Transaction Coordinator MSDTC Running     Auto  Own Process
      c:\winnt\system32\msdtc.exe   Normal      LocalSystem 0
Windows Installer MSIServer   Stopped     Manual      Share Process
      c:\winnt\system32\msiexec.exe /v    Normal      LocalSystem 0
Network DDE NetDDE      Stopped     Manual      Share Process
      c:\winnt\system32\netdde.exe  Normal      LocalSystem 0
Network DDE DSDM  NetDDEdsdm  Stopped     Manual      Share Process
      c:\winnt\system32\netdde.exe  Normal      LocalSystem 0
Net Logon   Netlogon    Stopped     Manual      Share Process
      c:\winnt\system32\lsass.exe   Normal      LocalSystem 0
Network Connections     Netman      Running     Manual      Share
Process     c:\winnt\system32\svchost.exe -k netsvcs  Normal
      LocalSystem 0
File Replication  NtFrs Stopped     Manual      Own Process
      c:\winnt\system32\ntfrs.exe   Ignore      LocalSystem 0
NT LM Security Support Provider     NtLmSsp     Stopped     Manual
      Share Process     c:\winnt\system32\lsass.exe   Normal
      LocalSystem 0
Removable Storage NtmsSvc     Stopped     Manual      Share Process
      c:\winnt\system32\svchost.exe -k netsvcs  Normal      LocalSystem
      0
Plug and Play     PlugPlay    Running     Auto  Share Process
      c:\winnt\system32\services.exe      Normal      LocalSystem 0
IPSEC Policy Agent      PolicyAgent Stopped     Manual      Share
Process     c:\winnt\system32\lsass.exe   Normal      LocalSystem 0
Protected Storage ProtectedStorage  Running     Auto  Share Process
      c:\winnt\system32\services.exe      Normal      LocalSystem 0
Remote Access Auto Connection Manager     RasAuto     Stopped
      Manual      Share Process     c:\winnt\system32\svchost.exe -k
netsvcs     Normal      LocalSystem 0
Remote Access Connection Manager    RasMan      Stopped     Manual
      Share Process     c:\winnt\system32\svchost.exe -k netsvcs
      Normal      LocalSystem 0
Routing and Remote Access     RemoteAccess      Stopped     Disabled
      Share Process     c:\winnt\system32\svchost.exe -k netsvcs
      Normal      LocalSystem 0
Remote Registry Service RemoteRegistry    Running     Auto  Own Process
      c:\winnt\system32\regsvc.exe  Normal      LocalSystem 0
Remote Procedure Call (RPC) Locator RpcLocator  Stopped     Manual
      Own Process c:\winnt\system32\locator.exe Normal      LocalSystem
      0
```


Copyright Dell

```
Remote Procedure Call (RPC)   RpcSs Running     Auto  Share Process
      c:\winnt\system32\svchost -k rpcss  Normal      LocalSystem 0
QoS RSVP    RSVP  Running     Manual      Own Process
      c:\winnt\system32\rsvp.exe -s Normal      LocalSystem 0
Security Accounts Manager     SamSs Running     Auto  Share Process
      c:\winnt\system32\lsass.exe   Normal      LocalSystem 0
Smart Card Helper SCardDrv    Stopped     Manual      Share Process
      c:\winnt\system32\scardsvr.exe      Ignore      LocalSystem 0
Smart Card  SCardSvr    Stopped     Manual      Share Process
      c:\winnt\system32\scardsvr.exe      Ignore      LocalSystem 0
Task Scheduler    Schedule    Running     Auto  Share Process
      c:\winnt\system32\mstask.exe  Normal      LocalSystem 0
RunAs Service     seclogon    Running     Auto  Share Process
      c:\winnt\system32\services.exe      Ignore      LocalSystem 0
System Event Notification     SENS  Running     Auto  Share Process
      c:\winnt\system32\svchost.exe -k netsvcs  Normal      LocalSystem
      0
Internet Connection Sharing   SharedAccess      Stopped     Manual
      Share Process     c:\winnt\system32\svchost.exe -k netsvcs
      Normal      LocalSystem 0
Print Spooler     Spooler     Stopped     Manual      Own Process
      c:\winnt\system32\spoolsv.exe Normal      LocalSystem 0
Performance Logs and Alerts   SysmonLog   Stopped     Manual      Own
Process     c:\winnt\system32\smlogsvc.exe      Normal      LocalSystem
      0
Telephony   TapiSrv     Running     Manual      Share Process
      c:\winnt\system32\svchost.exe -k tapisrv  Normal      LocalSystem
      0
Terminal Services TermService Stopped     Disabled    Own Process
      c:\winnt\system32\termsrv.exe Normal      LocalSystem 0
Telnet      TlntSvr     Stopped     Manual      Own Process
      c:\winnt\system32\tlntsvr.exe Normal      LocalSystem 0
Distributed Link Tracking Server    TrkSvr      Stopped     Manual
      Share Process     c:\winnt\system32\services.exe      Normal
      LocalSystem 0
Distributed Link Tracking Client    TrkWks      Stopped     Manual
      Share Process     c:\winnt\system32\services.exe      Normal
      LocalSystem 0
Uninterruptible Power Supply  UPS   Stopped     Manual      Own Process
      c:\winnt\system32\ups.exe     Normal      LocalSystem 0
Utility Manager   UtilMan     Stopped     Manual      Own Process
      c:\winnt\system32\utilman.exe Normal      LocalSystem 0
Windows Time      W32Time     Stopped     Manual      Share Process
      c:\winnt\system32\services.exe      Normal      LocalSystem 0
World Wide Web Publishing Service   W3SVC Running     Auto  Share
Process     c:\winnt\system32\inetsrv\inetinfo.exe    Normal
      LocalSystem 0
Windows Management Instrumentation  WinMgmt     Running     Auto  Own
Process     c:\winnt\system32\wbem\winmgmt.exe  Ignore      LocalSystem
      0
Windows Management Instrumentation Driver Extensions  Wmi   Running
      Manual      Share Process     c:\winnt\system32\services.exe
      Normal      LocalSystem 0

[Program Groups]
```


Copyright Dell

```
Group Name  Name  User Name
Accessories Default User:Accessories      Default User
Accessories\Accessibility     Default User:Accessories\Accessibility
      Default User
Accessories\Entertainment     Default User:Accessories\Entertainment
      Default User
Accessories\System Tools      Default User:Accessories\System Tools
      Default User
Startup     Default User:Startup    Default User
Accessories All Users:Accessories   All Users
Accessories\Accessibility     All Users:Accessories\Accessibility All
Users
Accessories\Communications    All Users:Accessories\Communications
      All Users
Accessories\Entertainment     All Users:Accessories\Entertainment All
Users
Accessories\Games All Users:Accessories\Games   All Users
Accessories\System Tools      All Users:Accessories\System Tools  All
Users
Administrative Tools    All Users:Administrative Tools      All Users
Microsoft SQL Server    All Users:Microsoft SQL Server      All Users
MKS Toolkit All Users:MKS Toolkit   All Users
Startup     All Users:Startup All Users
WinZip      All Users:WinZip  All Users
Accessories CLIENT1\Administrator:Accessories   CLIENT1\Administrator
Accessories\Accessibility
      CLIENT1\Administrator:Accessories\Accessibility
      CLIENT1\Administrator
Accessories\Entertainment
      CLIENT1\Administrator:Accessories\Entertainment
      CLIENT1\Administrator
Accessories\System Tools      CLIENT1\Administrator:Accessories\System
Tools CLIENT1\Administrator
Administrative Tools    CLIENT1\Administrator:Administrative Tools
      CLIENT1\Administrator
QLogic Corporation      CLIENT1\Administrator:QLogic Corporation
      CLIENT1\Administrator
QLogic Corporation\SANblade Control VIX   CLIENT1\Administrator:QLogic
Corporation\SANblade Control VIX    CLIENT1\Administrator
Startup     CLIENT1\Administrator:Startup CLIENT1\Administrator

[Startup Programs]

Program     Command     User Name   Location
No startup program information

[OLE Registration]

Object      Local Server
Sound (OLE2)      sndrec32.exe
Media Clip  mplay32.exe
Video Clip  mplay32.exe /avi
MIDI Sequence     mplay32.exe /mid
Sound Not Available
```


Copyright Dell

```
Media Clip  Not Available
Image Document    "C:\Program Files\Windows
NT\Accessories\ImageVue\KodakImg.exe"
WordPad Document  "%ProgramFiles%\Windows NT\Accessories\WORDPAD.EXE"
Windows Media Services DRM Storage object Not Available
Bitmap Image      C:\WINNT\System32\mspaint.exe

[Internet Explorer 5]

[ Following are sub-categories of this main category ]

[Summary]

Item  Value
Version     5.00.3103.1000
Build 53103.1000
Product ID  51876-OEM-0001501-00000
Application Path  C:\Program Files\Internet Explorer
Language    English (United States)
Active Printer    Not Available

Cipher Strength   56-bit
Content Advisor   Disabled
IEAK Install      No

[File Versions]

File  Version     Size  Date  Path  Company
advapi32.dll      5.0.2195.1600     349 KB      7/26/2000 7:00:00 AM
      C:\WINNT\system32 Microsoft Corporation
advapi32.dll      5.0.2195.1600     349 KB      7/26/2000 7:00:00 AM
      .     Microsoft Corporation
advpack.dll 5.0.3103.1000     87 KB 7/26/2000 7:00:00 AM
      C:\WINNT\system32 Microsoft Corporation
advpack.dll 5.0.3103.1000     87 KB 7/26/2000 7:00:00 AM    .
      Microsoft Corporation
browselc.dll      5.0.3103.1000     35 KB 7/26/2000 7:00:00 AM
      C:\WINNT\system32 Microsoft Corporation
browselc.dll      5.0.3103.1000     35 KB 7/26/2000 7:00:00 AM    .
      Microsoft Corporation
browseui.dll      5.0.3103.1000     789 KB      7/26/2000 7:00:00 AM
      C:\WINNT\system32 Microsoft Corporation
browseui.dll      5.0.3103.1000     789 KB      7/26/2000 7:00:00 AM
      .     Microsoft Corporation
ckcnv.exe   5.0.2189.1  9 KB  7/26/2000 7:00:00 AM    C:\WINNT\system32
      Microsoft Corporation
ckcnv.exe   5.0.2189.1  9 KB  7/26/2000 7:00:00 AM    .     Microsoft
Corporation
comctl32.dll      5.81.3103.1000    538 KB      7/26/2000 7:00:00 AM
      C:\WINNT\system32 Microsoft Corporation
comctl32.dll      5.81.3103.1000    538 KB      7/26/2000 7:00:00 AM
      .     Microsoft Corporation
crypt32.dll 5.131.2195.1340   465 KB      7/26/2000 7:00:00 AM
      C:\WINNT\system32 Microsoft Corporation
```


Copyright Dell

```
crypt32.dll 5.131.2195.1340   465 KB      7/26/2000 7:00:00 AM    .
      Microsoft Corporation
enhsig.dll  <File Missing>    Not Available     Not Available     Not
Available   Not Available
iemigrat.dll      <File Missing>    Not Available     Not Available
      Not Available     Not Available
iesetup.dll 5.0.3103.1000     57 KB 7/26/2000 7:00:00 AM
      C:\WINNT\system32 Microsoft Corporation
iesetup.dll 5.0.3103.1000     57 KB 7/26/2000 7:00:00 AM    .
      Microsoft Corporation
iexplore.exe      5.0.2920.0  59 KB 7/26/2000 7:00:00 AM    C:\Program
Files\Internet Explorer Microsoft Corporation
imagehlp.dll      5.0.2195.1  125 KB      7/26/2000 7:00:00 AM
      C:\WINNT\system32 Microsoft Corporation
imagehlp.dll      5.0.2195.1  125 KB      7/26/2000 7:00:00 AM    .
      Microsoft Corporation
imghelp.dll <File Missing>    Not Available     Not Available     Not
Available   Not Available
inseng.dll  5.0.3103.1000     72 KB 7/26/2000 7:00:00 AM
      C:\WINNT\system32 Microsoft Corporation
inseng.dll  5.0.3103.1000     72 KB 7/26/2000 7:00:00 AM    .
      Microsoft Corporation
jobexec.dll 5.0.0.1     47 KB 7/26/2000 7:00:00 AM    C:\WINNT\system32
      Microsoft Corporation
jobexec.dll 5.0.0.1     47 KB 7/26/2000 7:00:00 AM    .     Microsoft
Corporation
jscript.dll 5.1.0.5010  476 KB      7/26/2000 7:00:00 AM
      C:\WINNT\system32 Microsoft Corporation
jscript.dll 5.1.0.5010  476 KB      7/26/2000 7:00:00 AM    .
      Microsoft Corporation
jsproxy.dll 5.0.2920.0  13 KB 7/26/2000 7:00:00 AM    C:\WINNT\system32
      Microsoft Corporation
jsproxy.dll 5.0.2920.0  13 KB 7/26/2000 7:00:00 AM    .     Microsoft
Corporation
msaahtml.dll      <File Missing>    Not Available     Not Available
      Not Available     Not Available
mshtml.dll  5.0.3103.1000     2292 KB     7/26/2000 7:00:00 AM
      C:\WINNT\system32 Microsoft Corporation
mshtml.dll  5.0.3103.1000     2292 KB     7/26/2000 7:00:00 AM    .
      Microsoft Corporation
msjava.dll  5.0.3310.0  922 KB      7/26/2000 7:00:00 AM
      C:\WINNT\system32 Microsoft Corporation
msjava.dll  5.0.3310.0  922 KB      7/26/2000 7:00:00 AM    .
      Microsoft Corporation
msoss.dll   <File Missing>    Not Available     Not Available     Not
Available   Not Available
msxml.dll   8.0.5226.0  506 KB      7/26/2000 7:00:00 AM
      C:\WINNT\system32 Microsoft Corporation
msxml.dll   8.0.5226.0  506 KB      7/26/2000 7:00:00 AM    .
      Microsoft Corporation
occache.dll 5.0.3103.1000     86 KB 7/26/2000 7:00:00 AM
      C:\WINNT\system32 Microsoft Corporation
occache.dll 5.0.3103.1000     86 KB 7/26/2000 7:00:00 AM    .
      Microsoft Corporation
```


Copyright Dell

```
ole32.dll   5.0.2195.1607     965 KB      7/26/2000 7:00:00 AM
      C:\WINNT\system32 Microsoft Corporation
ole32.dll   5.0.2195.1607     965 KB      7/26/2000 7:00:00 AM    .
      Microsoft Corporation
oleaut32.dll      2.40.4514.1 600 KB      7/26/2000 7:00:00 AM
      C:\WINNT\system32 Microsoft Corporation
oleaut32.dll      2.40.4514.1 600 KB      7/26/2000 7:00:00 AM    .
      Microsoft Corporation
olepro32.dll      5.0.4514.1  160 KB      7/26/2000 7:00:00 AM
      C:\WINNT\system32 Microsoft Corporation
olepro32.dll      5.0.4514.1  160 KB      7/26/2000 7:00:00 AM    .
      Microsoft Corporation
rsabase.dll 5.0.2195.1391     129 KB      7/26/2000 7:00:00 AM
      C:\WINNT\system32 Microsoft Corporation
rsabase.dll 5.0.2195.1391     129 KB      7/26/2000 7:00:00 AM    .
      Microsoft Corporation
rsaenh.dll  <File Missing>    Not Available     Not Available     Not
Available   Not Available
rsapi32.dll <File Missing>    Not Available     Not Available     Not
Available   Not Available
rsasig.dll  <File Missing>    Not Available     Not Available     Not
Available   Not Available
schannel.dll      5.0.2195.0  137 KB      7/26/2000 7:00:00 AM
      C:\WINNT\system32 Microsoft Corporation
schannel.dll      5.0.2195.0  137 KB      7/26/2000 7:00:00 AM    .
      Microsoft Corporation
shdoc401.dll      <File Missing>    Not Available     Not Available
      Not Available     Not Available
shdocvw.dll 5.0.3103.1000     1078 KB     7/26/2000 7:00:00 AM
      C:\WINNT\system32 Microsoft Corporation
shdocvw.dll 5.0.3103.1000     1078 KB     7/26/2000 7:00:00 AM    .
      Microsoft Corporation
shell32.dll 5.0.3103.1000     2303 KB     7/26/2000 7:00:00 AM
      C:\WINNT\system32 Microsoft Corporation
shell32.dll 5.0.3103.1000     2303 KB     7/26/2000 7:00:00 AM    .
      Microsoft Corporation
shlwapi.dll 5.0.3103.1000     282 KB      7/26/2000 7:00:00 AM
      C:\WINNT\system32 Microsoft Corporation
shlwapi.dll 5.0.3103.1000     282 KB      7/26/2000 7:00:00 AM    .
      Microsoft Corporation
url.dll     5.0.2920.0  82 KB 7/26/2000 7:00:00 AM    C:\WINNT\system32
      Microsoft Corporation
url.dll     5.0.2920.0  82 KB 7/26/2000 7:00:00 AM    .     Microsoft
Corporation
urlmon.dll  5.0.3103.1000     441 KB      7/26/2000 7:00:00 AM
      C:\WINNT\system32 Microsoft Corporation
urlmon.dll  5.0.3103.1000     441 KB      7/26/2000 7:00:00 AM    .
      Microsoft Corporation
vbscript.dll      5.1.0.5010  428 KB      7/26/2000 7:00:00 AM
      C:\WINNT\system32 Microsoft Corporation
vbscript.dll      5.1.0.5010  428 KB      7/26/2000 7:00:00 AM    .
      Microsoft Corporation
webcheck.dll      5.0.3103.1000     252 KB      7/26/2000 7:00:00 AM
      C:\WINNT\system32 Microsoft Corporation
```


Copyright Dell

```
webcheck.dll      5.0.3103.1000     252 KB      7/26/2000 7:00:00 AM
      .     Microsoft Corporation
win.com     5.0.2134.1  24 KB 7/26/2000 7:00:00 AM    C:\WINNT\system32
      Microsoft Corporation
win.com     5.0.2134.1  24 KB 7/26/2000 7:00:00 AM    .     Microsoft
Corporation
wininet.dll 5.0.3103.1000     457 KB      7/26/2000 7:00:00 AM
      C:\WINNT\system32 Microsoft Corporation
wininet.dll 5.0.3103.1000     457 KB      7/26/2000 7:00:00 AM    .
      Microsoft Corporation
winsock.dll 3.10.0.103  3 KB  7/26/2000 7:00:00 AM    C:\WINNT\system32
      Microsoft Corporation
winsock.dll 3.10.0.103  3 KB  7/26/2000 7:00:00 AM    .     Microsoft
Corporation
wintrust.dll      5.131.2143.1      162 KB      7/26/2000 7:00:00 AM
      C:\WINNT\system32 Microsoft Corporation
wintrust.dll      5.131.2143.1      162 KB      7/26/2000 7:00:00 AM
      .     Microsoft Corporation
wsock.vxd   <File Missing>    Not Available     Not Available     Not
Available   Not Available
wsock32.dll 5.0.2195.1207     21 KB 7/26/2000 7:00:00 AM
      C:\WINNT\system32 Microsoft Corporation
wsock32.dll 5.0.2195.1207     21 KB 7/26/2000 7:00:00 AM    .
      Microsoft Corporation
wsock32n.dll      <File Missing>    Not Available     Not Available
      Not Available     Not Available

[Connectivity]

Item  Value
Connection Preference   Never dial
EnableHttp1.1     1
ProxyHttp1.1      0

LAN Settings

AutoConfigProxy   wininet.dll
AutoProxyDetectMode     Enabled
AutoConfigURL
Proxy Disabled
ProxyServer
ProxyOverride

[Cache]

[ Following are sub-categories of this main category ]

[Summary]

Item  Value
Page Refresh Type Automatic
Temporary Internet Files Folder     C:\Documents and
Settings\Administrator\Local Settings\Temporary Internet Files
Total Disk Space  17359 MB
Available Disk Space    13183 MB
```


Copyright Dell

```
Maximum Cache Size      542 MB
Available Cache Size    542 MB

[List of Objects]

Program File      Status      CodeBase
No cached object information available

[Content]

[ Following are sub-categories of this main category ]

[Summary]

Item  Value
Content Advisor   Disabled

[Personal Certificates]

Issued To   Issued By   Validity    Signature Algorithm
Administrator     Administrator     3/29/2002 to 3/5/2102   sha1RSA

[Other People Certificates]

Issued To   Issued By   Validity    Signature Algorithm
No other people certificate information available

[Publishers]

Name
No publisher information available

[Security]

Zone  Security Level
Local intranet    Medium-low
Trusted sites     Low
Internet    Medium
Restricted sites  High
```


Copyright Dell

Appendix C – Tunable Parameters

RTE Input Parameters

BenchCraft Configuration File

Profile: 6720_40_6_01
File Path: G:\Delivery_logs\M46\6720_40_6_01.pro
Version: 1.0.1
Number of Engines: 10

Name: DRIVER2A
Description: RTE2A
Directory: c:\tpcclog\rte2a.log
Machine: RTE2A
Parameter Set: PARAM2
Index: 0
Seed: 98176
Configured Users: 6720
Pipe Name: DRIVER43501360
Connect Rate: 2000
Start Rate: 0
CLIENT_NURAND: 208
CPU: 0

Name: DRIVER2B
Description: RTE2B
Directory: c:\tpcclog\rte2b.log
Machine: RTE2B
Parameter Set: PARAM2
Index: 100000000
Seed: 98176
Configured Users: 6720
Pipe Name: DRIVER40641161
Connect Rate: 2000
Start Rate: 0
CLIENT_NURAND: 208
CPU: 0

Name: DRIVER3A
Description: RTE3A
Directory: c:\tpcclog\rte3a.log
Machine: RTE3A
Parameter Set: PARAM2
Index: 200000000
Seed: 98176
Configured Users: 6720
Pipe Name: DRIVER371721555
Connect Rate: 2000
Start Rate: 0
CLIENT_NURAND: 208
CPU: 0

Copyright Dell

Name: DRIVER3B
Description: RTE3B
Directory: c:\tpcclog\rte3b.log
Machine: RTE3B
Parameter Set: PARAM2
Index: 300000000
Seed: 98176
Configured Users: 6720
Pipe Name: DRIVER341837462
Connect Rate: 2000
Start Rate: 0
CLIENT_NURAND: 208
CPU: 0

Name: DRIVER4A
Description: RTE4A
Directory: c:\tpcclog\rte4a.log
Machine: RTE4A
Parameter Set: PARAM2
Index: 400000000
Seed: 98176
Configured Users: 6720
Pipe Name: DRIVER311984373
Connect Rate: 2000
Start Rate: 0
CLIENT_NURAND: 208
CPU: 0

Name: DRIVER4B
Description: RTE4B
Directory: c:\tpcclog\rte4b.log
Machine: RTE4B
Parameter Set: PARAM2
Index: 500000000
Seed: 98176
Configured Users: 6720
Pipe Name: DRIVER282107740
Connect Rate: 2000
Start Rate: 0
CLIENT_NURAND: 208
CPU: 0

Name: DRIVER5A
Description: RTE5A
Directory: c:\tpcclog\rte5a.log
Machine: RTE5A
Parameter Set: PARAM2
Index: 600000000
Seed: 98176
Configured Users: 6720
Pipe Name: DRIVER252204459
Connect Rate: 2000
Start Rate: 0
CLIENT_NURAND: 208
CPU: 0

Copyright Dell

Name: DRIVER5B
Description: RTE5B
Directory: c:\tpcclog\rte5b.log
Machine: RTE5B
Parameter Set: PARAM2
Index: 700000000
Seed: 98176
Configured Users: 6720
Pipe Name: DRIVER222420160
Connect Rate: 2000
Start Rate: 0
CLIENT_NURAND: 208
CPU: 0

Name: DRIVER6A
Description: RTE6A
Directory: c:\tpcclog\rte6a.log
Machine: RTE6A
Parameter Set: PARAM2
Index: 800000000
Seed: 98176
Configured Users: 6720
Pipe Name: DRIVER192556896
Connect Rate: 2000
Start Rate: 0
CLIENT_NURAND: 208
CPU: 0

Name: DRIVER6B
Description: RTE6B
Directory: c:\tpcclog\rte6b.log
Machine: RTE6B
Parameter Set: PARAM2
Index: 900000000
Seed: 98176
Configured Users: 6720
Pipe Name: DRIVER162653836
Connect Rate: 2000
Start Rate: 0
CLIENT_NURAND: 208
CPU: 0

Number of User groups: 40

Driver Engine: DRIVER2A
IIS Server: CLIENT1_1
SQL Server: PE6500
User: sa
Protocol: Html
w_id Range: 1 - 168
w_id Max Warehouse: 6720
Scale: Normal
User Count: 1680
District id: 1

Copyright Dell

Scale Down: No

Driver Engine: DRIVER2A
IIS Server: CLIENT2_1
SQL Server: PE6500
User: sa
Protocol: Html
w_id Range: 169 - 336
w_id Max Warehouse: 6720
Scale: Normal
User Count: 1680
District id: 1
Scale Down: No

Driver Engine: DRIVER2A
IIS Server: CLIENT3_1
SQL Server: PE6500
User: sa
Protocol: Html
w_id Range: 337 - 504
w_id Max Warehouse: 6720
Scale: Normal
User Count: 1680
District id: 1
Scale Down: No

Driver Engine: DRIVER2A
IIS Server: CLIENT1_1
SQL Server: PE6500
User: sa
Protocol: Html
w_id Range: 505 - 672
w_id Max Warehouse: 6720
Scale: Normal
User Count: 1680
District id: 1
Scale Down: No

Driver Engine: DRIVER2B
IIS Server: CLIENT5_1
SQL Server: PE6500
User: sa
Protocol: Html
w_id Range: 673 - 840
w_id Max Warehouse: 6720
Scale: Normal
User Count: 1680
District id: 1
Scale Down: No

Driver Engine: DRIVER2B
IIS Server: CLIENT6_1
SQL Server: PE6500
User: sa
Protocol: Html

Copyright Dell

w_id Range: 841 - 1008
w_id Max Warehouse: 6720
Scale: Normal
User Count: 1680
District id: 1
Scale Down: No

Driver Engine: DRIVER2B
IIS Server: CLIENT7_1
SQL Server: PE6500
User: sa
Protocol: Html
w_id Range: 1009 - 1176
w_id Max Warehouse: 6720
Scale: Normal
User Count: 1680
District id: 1
Scale Down: No

Driver Engine: DRIVER2B
IIS Server: CLIENT5_1
SQL Server: PE6500
User: sa
Protocol: Html
w_id Range: 1177 - 1344
w_id Max Warehouse: 6720
Scale: Normal
User Count: 1680
District id: 1
Scale Down: No

Driver Engine: DRIVER3A
IIS Server: CLIENT1_1
SQL Server: PE6500
User: sa
Protocol: Html
w_id Range: 1345 - 1512
w_id Max Warehouse: 6720
Scale: Normal
User Count: 1680
District id: 1
Scale Down: No

Driver Engine: DRIVER3A
IIS Server: CLIENT2_1
SQL Server: PE6500
User: sa
Protocol: Html
w_id Range: 1513 - 1680
w_id Max Warehouse: 6720
Scale: Normal
User Count: 1680
District id: 1
Scale Down: No

Copyright Dell

Driver Engine: DRIVER3A
IIS Server: CLIENT3_1
SQL Server: PE6500
User: sa
Protocol: Html
w_id Range: 1681 - 1848
w_id Max Warehouse: 6720
Scale: Normal
User Count: 1680
District id: 1
Scale Down: No

Driver Engine: DRIVER3A
IIS Server: CLIENT2_1
SQL Server: PE6500
User: sa
Protocol: Html
w_id Range: 1849 - 2016
w_id Max Warehouse: 6720
Scale: Normal
User Count: 1680
District id: 1
Scale Down: No

Driver Engine: DRIVER3B
IIS Server: CLIENT5_1
SQL Server: PE6500
User: sa
Protocol: Html
w_id Range: 2017 - 2184
w_id Max Warehouse: 6720
Scale: Normal
User Count: 1680
District id: 1
Scale Down: No

Driver Engine: DRIVER3B
IIS Server: CLIENT6_1
SQL Server: PE6500
User: sa
Protocol: Html
w_id Range: 2185 - 2352
w_id Max Warehouse: 6720
Scale: Normal
User Count: 1680
District id: 1
Scale Down: No

Driver Engine: DRIVER3B
IIS Server: CLIENT7_1
SQL Server: PE6500
User: sa
Protocol: Html
w_id Range: 2353 - 2520
w_id Max Warehouse: 6720

Copyright Dell

Scale: Normal
User Count: 1680
District id: 1
Scale Down: No

Driver Engine: DRIVER3B
IIS Server: CLIENT6_1
SQL Server: PE6500
User: sa
Protocol: Html
w_id Range: 2521 - 2688
w_id Max Warehouse: 6720
Scale: Normal
User Count: 1680
District id: 1
Scale Down: No

Driver Engine: DRIVER4A
IIS Server: CLIENT1_1
SQL Server: PE6500
User: sa
Protocol: Html
w_id Range: 2689 - 2856
w_id Max Warehouse: 6720
Scale: Normal
User Count: 1680
District id: 1
Scale Down: No

Driver Engine: DRIVER4A
IIS Server: CLIENT2_1
SQL Server: PE6500
User: sa
Protocol: Html
w_id Range: 2857 - 3024
w_id Max Warehouse: 6720
Scale: Normal
User Count: 1680
District id: 1
Scale Down: No

Driver Engine: DRIVER4A
IIS Server: CLIENT3_1
SQL Server: PE6500
User: sa
Protocol: Html
w_id Range: 3025 - 3192
w_id Max Warehouse: 6720
Scale: Normal
User Count: 1680
District id: 1
Scale Down: No

Driver Engine: DRIVER4A
IIS Server: CLIENT3_1

Copyright Dell

SQL Server: PE6500
User: sa
Protocol: Html
w_id Range: 3193 - 3360
w_id Max Warehouse: 6720
Scale: Normal
User Count: 1680
District id: 1
Scale Down: No

Driver Engine: DRIVER4B
IIS Server: CLIENT5_1
SQL Server: PE6500
User: sa
Protocol: Html
w_id Range: 3361 - 3528
w_id Max Warehouse: 6720
Scale: Normal
User Count: 1680
District id: 1
Scale Down: No

Driver Engine: DRIVER4B
IIS Server: CLIENT6_1
SQL Server: PE6500
User: sa
Protocol: Html
w_id Range: 3529 - 3696
w_id Max Warehouse: 6720
Scale: Normal
User Count: 1680
District id: 1
Scale Down: No

Driver Engine: DRIVER4B
IIS Server: CLIENT7_1
SQL Server: PE6500
User: sa
Protocol: Html
w_id Range: 3697 - 3864
w_id Max Warehouse: 6720
Scale: Normal
User Count: 1680
District id: 1
Scale Down: No

Driver Engine: DRIVER4B
IIS Server: CLIENT7_1
SQL Server: PE6500
User: sa
Protocol: Html
w_id Range: 3865 - 4032
w_id Max Warehouse: 6720
Scale: Normal
User Count: 1680

Copyright Dell

District id: 1
Scale Down: No

Driver Engine: DRIVER5A
IIS Server: CLIENT1_1
SQL Server: PE6500
User: sa
Protocol: Html
w_id Range: 4033 - 4200
w_id Max Warehouse: 6720
Scale: Normal
User Count: 1680
District id: 1
Scale Down: No

Driver Engine: DRIVER5A
IIS Server: CLIENT2_1
SQL Server: PE6500
User: sa
Protocol: Html
w_id Range: 4201 - 4368
w_id Max Warehouse: 6720
Scale: Normal
User Count: 1680
District id: 1
Scale Down: No

Driver Engine: DRIVER5A
IIS Server: CLIENT3_1
SQL Server: PE6500
User: sa
Protocol: Html
w_id Range: 4369 - 4536
w_id Max Warehouse: 6720
Scale: Normal
User Count: 1680
District id: 1
Scale Down: No

Driver Engine: DRIVER5A
IIS Server: CLIENT1_1
SQL Server: PE6500
User: sa
Protocol: Html
w_id Range: 4537 - 4704
w_id Max Warehouse: 6720
Scale: Normal
User Count: 1680
District id: 1
Scale Down: No

Driver Engine: DRIVER5B
IIS Server: CLIENT5_1
SQL Server: PE6500
User: sa

Copyright Dell

Protocol: Html
w_id Range: 4705 - 4872
w_id Max Warehouse: 6720
Scale: Normal
User Count: 1680
District id: 1
Scale Down: No

Driver Engine: DRIVER5B
IIS Server: CLIENT6_1
SQL Server: PE6500
User: sa
Protocol: Html
w_id Range: 4873 - 5040
w_id Max Warehouse: 6720
Scale: Normal
User Count: 1680
District id: 1
Scale Down: No

Driver Engine: DRIVER5B
IIS Server: CLIENT7_1
SQL Server: PE6500
User: sa
Protocol: Html
w_id Range: 5041 - 5208
w_id Max Warehouse: 6720
Scale: Normal
User Count: 1680
District id: 1
Scale Down: No

Driver Engine: DRIVER5B
IIS Server: CLIENT5_1
SQL Server: PE6500
User: sa
Protocol: Html
w_id Range: 5209 - 5376
w_id Max Warehouse: 6720
Scale: Normal
User Count: 1680
District id: 1
Scale Down: No

Driver Engine: DRIVER6A
IIS Server: CLIENT1_1
SQL Server: PE6500
User: sa
Protocol: Html
w_id Range: 5377 - 5544
w_id Max Warehouse: 6720
Scale: Normal
User Count: 1680
District id: 1
Scale Down: No

Copyright Dell

Driver Engine: DRIVER6A
IIS Server: CLIENT2_1
SQL Server: PE6500
User: sa
Protocol: Html
w_id Range: 5545 - 5712
w_id Max Warehouse: 6720
Scale: Normal
User Count: 1680
District id: 1
Scale Down: No

Driver Engine: DRIVER6A
IIS Server: CLIENT3_1
SQL Server: PE6500
User: sa
Protocol: Html
w_id Range: 5713 - 5880
w_id Max Warehouse: 6720
Scale: Normal
User Count: 1680
District id: 1
Scale Down: No

Driver Engine: DRIVER6A
IIS Server: CLIENT2_1
SQL Server: PE6500
User: sa
Protocol: Html
w_id Range: 5881 - 6048
w_id Max Warehouse: 6720
Scale: Normal
User Count: 1680
District id: 1
Scale Down: No

Driver Engine: DRIVER6B
IIS Server: CLIENT5_1
SQL Server: PE6500
User: sa
Protocol: Html
w_id Range: 6049 - 6216
w_id Max Warehouse: 6720
Scale: Normal
User Count: 1680
District id: 1
Scale Down: No

Driver Engine: DRIVER6B
IIS Server: CLIENT6_1
SQL Server: PE6500
User: sa
Protocol: Html
w_id Range: 6217 - 6384

Copyright Dell

w_id Max Warehouse: 6720
Scale: Normal
User Count: 1680
District id: 1
Scale Down: No

Driver Engine: DRIVER6B
IIS Server: CLIENT7_1
SQL Server: PE6500
User: sa
Protocol: Html
w_id Range: 6385 - 6552
w_id Max Warehouse: 6720
Scale: Normal
User Count: 1680
District id: 1
Scale Down: No

Driver Engine: DRIVER6B
IIS Server: CLIENT6_1
SQL Server: PE6500
User: sa
Protocol: Html
w_id Range: 6553 - 6720
w_id Max Warehouse: 6720
Scale: Normal
User Count: 1680
District id: 1
Scale Down: No
Number of Parameter Sets: 2

PARAM2
Slightly tweaked parameter set

	Txn Weight	Think Time	Key Time	RT Delay	RT Fence	Menu Delay
New Order	44.84	12.04	18.02	0.10	5.00	0.10
Payment	43.04	12.04	3.02	0.10	5.00	0.10
Delivery	4.04	5.04	2.02	0.10	5.00	0.10
Stock Level	4.04	5.04	2.02	0.10	20.00	0.10
Order Status	4.04	10.04	2.02	0.10	5.00	0.10

~Default
Default Parameter Set

	Txn Weight	Think Time	Key Time	RT Delay	RT Fence	Menu Delay
New Order	10.00	12.05	18.01	0.10	5.00	0.10
Payment	10.00	12.05	3.01	0.10	5.00	0.10
Delivery	1.00	5.05	2.01	0.10	5.00	0.10
Stock Level	1.00	5.05	2.01	0.10	20.00	0.10
Order Status	1.00	10.05	2.01	0.10	5.00	0.10

Copyright Dell

Appendix D – Disk Storage

TPC-C 60 Day Space Requirements						
Warehouses	**7000**				**TpmC**	**84,595.22**
Table	**Rows**	**Data KB**	**Index KB**	**Extra 5% KB**	**8hr Space**	**Total Space KB**
Warehouse	7000	752	48	40		840
District	70000	7784	64	392		8240
Customer	210000000	152727280	9107184	8,091,723		169926187
History	210000000	11666680	160		2,255,875	11666840
NewOrder	63000000	996048	2312			998360
Orders	210000000	6436784	2927088		1,244,620	9363872
OrderLine	2099998534	131249912	277824		25,378,549	131527736
Item	100000	9528	64	480		10072
Stock	700000000	224000008	418728	11,220,937		235639673
Total		527,094,776	12,733,472	19,313,572	28,879,044	559,141,820
	MB					
Dynamic Space	145,853	Sum of Data for Order, Orderline and History				
Static Space	400,184	Sum of Data+Index+5%-Dynamic Space				
Free Space	na	Total Allocated Spac - (Dynamic + Static Space)				
Daily Growth	28,202	(Dynamic Space/(W*62.5))*tpmc				
Daily Spread	-	(Free Space -1.5*Daily Growth) Zero Assumed				
60 Day Space MB	2,092,316					
60 Day Space GB	**2,043.28**	**GB**				
Log Size	250,000	MB				
KB Per New Order	4.6921	KB				
8 hr log MB	186,060	MB				
8 hr log GB	**181.6996**	**GB**				
Space Usage	**GB Needed**	**Disks Measured**	**GB Priced**	**Disk Size**	**Formatted Size**	
60 Day Space DB	2,043.28	280	4724.45	18GB	16.873	
		0	0.00	9GB	8.195	
		0	0.00	4GB	3.999	
Total DB		**280.00**	**4724.45**	**9GB**		
8-hr log + mirror	363.3992	16	541.84	36GB	33.865	
OS, Swap	3	1	3.999	4GB		
Total Storage	**2,409.68**	**GB**	**5,270.29**	**GB**		

Copyright Dell

Appendix E - Price Quotation

Copyright Dell

PRICE QUOTE

LSI MegaRAID 1650-H Quotation

Date:	6/02/2003		
Company:	Dell Computers	**Phone Number:**	512-723-2285
Contact Name:	Michael Molloy	**Fax Number:**	

LSI Logic MegaRAID Enterprise 1650-H High Performance PCI-SCSI Raid Controller

Item	Part No.	MSRP
MegaRAID Series Enterprise 1650-H High Performance RAID Controller, 4 U160 SCSI Channels, 64MB SDRAM Memory, 2003 Performance Driver, Performance Firmware, Battery Back, and Manuals. Includes 3 year limited warranty.	5034536264A	$2998.00

MegaRaid Enterprise 1650-H Features

Deliverables

1. Windows 2003 Performance Driver
2. Utilities: Power Console Plus for Windows,
   Webbios and Control M pre-boot utilities.
3. Manuals (Optional): Hardware Guide, Software Guide and Driver Installation Guide.

Availability: By October 2003

- Intel GC80303 100mhz I/O processor
- 64 bit / 66mhz PCI
- LVD or Single Ended Support
- On board Battery Circuitry
- Supports up to 256mb ECC SDRAM

Conditions:

1. All pricing is quoted FOB USA; shipping and insurance are additional.
2. Terms of sale to be determined prior to shipment
3. Three-year limited warranty on parts and labor is offered for hardware products.

Submitted by: Siamak Iranpour **Date: June 02, 2003**

This quotation is valid for 90 days from the date shown and is subject to the conditions as listed.

Microsoft Corporation
One Microsoft Way
Redmond, WA 98052-6399

Tel 425 882 8080
Fax 425 936 7329
http://www.microsoft.com/

Microsoft

October 22, 2003

Dell Inc
Kong Yang
RR5
One Dell Way
Round Rock, TX 78682

Mr. Yang:

Here is the information you requested regarding pricing for several Microsoft products to be used in conjunction with your TPC-C benchmark testing.

All pricing shown is in US Dollars ($).

Part Number	Description	Unit Price	Quantity	Price
810-00846	**SQL Server 2000 Enterprise Edition** *Per processor licensing* *Discount Schedule: Open Program Level C* *Unit Price reflects a 17% discount from the retail unit price of $19,999.*	$16,541	4	$66,164
C11-00821	**Windows 2000 Server** *Server license only - No CALs* *Discount Schedule: Open Program - No Level* *Unit Price reflects a 8% discount from the retail unit price of $799.*	$738	6	$4,428
P72-00264	**Windows Server 2003, Enterprise Edition** *Server license only - No CALs* *Discount Schedule: Open Program - No Level* *Unit Price reflects a 40% discount from the retail unit price of $3,999.*	$2,399	1	$2,399
254-00170	**Visual C++ Standard** *No discounts applied*	$109	1	$109
PRO-PRORS-16U-01	**Database Server Support Package** *1 Year Term*	$1,950	3	$5,850

All products are currently orderable through Microsoft's normal distribution channels.

This quote is valid for the next 90 days.

If we can be of any further assistance, please contact Jamie Reding at (425) 703-0510 or jamiere@microsoft.com.

Reference ID: PCkoya0322107980
Please include this Reference ID in any correspondence regarding this price quote.