Hewlett-Packard Company

TPC Benchmark™ C
Full Disclosure Report
for
HP ProLiant DL585-G1/2.2GHz Dual Core
using
Microsoft SQL Server 2000 Enterprise Edition SP4
and
Windows Server 2003, Enterprise Edition SP1

First Edition
April 2005

© 2005 Hewlett-Packard Company. All rights reserved.

First Edition –April 2005

Hewlett-Packard Company (HP) believes that the information in this document is accurate as of the publication date. The information in this document is subject to change without notice. HP assumes no responsibility for any errors that may appear in this document. The pricing information in this document is believed to accurately reflect the current prices as of the publication date. However, HP provides no warranty of the pricing information in this document.

Benchmark results are highly dependent upon workload, specific application requirements, and system design and implementation. Relative system performance will vary as a result of these and other factors. Therefore, TPC Benchmark C should not be used as a substitute for a specific customer application benchmark when critical capacity planning and/or product evaluation decisions are contemplated.

All performance data contained in this report were obtained in a rigorously controlled environment. Results obtained in other operating environments may vary significantly. HP does not warrant or represent that a user can or will achieve similar performance expressed in transactions per minute (tpmC) or normalized price/performance ($/tpmC). No warranty of system performance or price/performance is expressed or implied in this report.

Copyright 2005 Hewlett-Packard Company.

All rights reserved. Permission is hereby granted to reproduce this document in whole or in part provided the copyright notice printed above is set forth in full text or on the title page of each item reproduced.

Printed in U.S.A., 2005
HP, NonStop, ProLiant DL585-G1, and ProLiant are registered trademarks of Hewlett-Packard Company.

Microsoft, Windows 2000, Windows Server 2003 and SQL Server 2000 are registered trademarks of Microsoft Corporation.

Xeon is a registered trademark of Intel.

Opteron is a registered trademark of AMD.

TPC Benchmark is a trademark of the Transaction Processing Performance Council.

Other product names mentioned in this document may be trademarks and/or registered trademarks of their respective companies.

© 2005 Hewlett-Packard Company. All rights reserved.

Table of Contents

TABLE OF CONTENTS **3**

PREFACE **5**

TPC BENCHMARK C OVERVIEW 5

ABSTRACT **6**

OVERVIEW 6
TPC BENCHMARK C METRICS 6
STANDARD AND EXECUTIVE SUMMARY STATEMENTS 6
AUDITOR 6

GENERAL ITEMS **10**

TEST SPONSOR 10
APPLICATION CODE AND DEFINITION STATEMENTS 10
PARAMETER SETTINGS 10
CONFIGURATION ITEMS 10

CLAUSE 1 RELATED ITEMS **12**

TABLE DEFINITIONS 12
PHYSICAL ORGANIZATION OF DATABASE 12
Benchmarked Configuration: *12*
PRICED CONFIGURATION VS. MEASURED CONFIGURATION: 13
INSERT AND DELETE OPERATIONS 13
PARTITIONING 14
REPLICATION, DUPLICATION OR ADDITIONS 14

CLAUSE 2 RELATED ITEMS **15**

RANDOM NUMBER GENERATION 15
INPUT/OUTPUT SCREEN LAYOUT 15
PRICED TERMINAL FEATURE VERIFICATION 15
PRESENTATION MANAGER OR INTELLIGENT TERMINAL 15
TRANSACTION STATISTICS 15
QUEUING MECHANISM 16

CLAUSE 3 RELATED ITEMS **17**

TRANSACTION SYSTEM PROPERTIES (ACID) 17
ATOMICITY 17
Completed Transactions *17*
Aborted Transactions *17*
CONSISTENCY 17
ISOLATION 17
DURABILITY 18
Durable Media Failure *18*
Instantaneous Interruption and Loss of Memory *19*

CLAUSE 4 RELATED ITEMS **20**

INITIAL CARDINALITY OF TABLES 20
DATABASE LAYOUT 20
TYPE OF DATABASE 21
DATABASE MAPPING 21
60 DAY SPACE 21

© 2005 Hewlett-Packard. All rights reserved.

CLAUSE 5 RELATED ITEMS **22**

THROUGHPUT 22
KEYING AND THINK TIMES 22
RESPONSE TIME FREQUENCY DISTRIBUTION CURVES AND OTHER GRAPHS 23
STEADY STATE DETERMINATION 28
WORK PERFORMED DURING STEADY STATE 28
MEASUREMENT PERIOD DURATION 28
REGULATION OF TRANSACTION MIX 29
TRANSACTION STATISTICS 29
CHECKPOINT COUNT AND LOCATION 30
CHECKPOINT DURATION 30

CLAUSE 6 RELATED ITEMS **31**

RTE DESCRIPTIONS 31
EMULATED COMPONENTS 31
FUNCTIONAL DIAGRAMS 31
NETWORKS 31
OPERATOR INTERVENTION 31

CLAUSE 7 RELATED ITEMS **32**

SYSTEM PRICING 32
AVAILABILITY, THROUGHPUT, AND PRICE PERFORMANCE 32
COUNTRY SPECIFIC PRICING 32
USAGE PRICING 32

CLAUSE 9 RELATED ITEMS **33**

AUDITOR'S REPORT 33
AVAILABILITY OF THE FULL DISCLOSURE REPORT 33

© 2005 Hewlett-Packard Company. All rights reserved.

Preface

The TPC Benchmark C was developed by the Transaction Processing Performance Council (TPC). The TPC was founded to define transaction processing benchmarks and to disseminate objective, verifiable performance data to the industry. This full disclosure report is based on the TPC Benchmark C Standard Specifications Version 5.3.

TPC Benchmark C Overview

The TPC describes this benchmark in Clause 0.1 of the specifications as follows:

TPC Benchmark™ C (TPC-C) is an OLTP workload. It is a mixture of read-only and update intensive transactions that simulate the activities found in complex OLTP application environments. It does so by exercising a breadth of system components associated with such environments, which are characterized by:

- The simultaneous execution of multiple transaction types that span a breadth of complexity
- On-line and deferred transaction execution modes
- Multiple on-line terminal sessions
- Moderate system and application execution time
- Significant disk input/output
- Transaction integrity (ACID properties)
- Non-uniform distribution of data access through primary and secondary keys
- Databases consisting of many tables with a wide variety of sizes, attributes, and relationships
- Contention on data access and update

The performance metric reported by TPC-C is a "business throughput" measuring the number of orders processed per minute. Multiple transactions are used to simulate the business activity of processing an order, and each transaction is subject to a response time constraint. The performance metric for this benchmark is expressed in transactions-per-minute-C (tpmC). To be compliant with the TPC-C standard, all references to tpmC results must include the tpmC rate, the associated price-per-tpmC, and the availability date of the priced configuration.

Although these specifications express implementation in terms of a relational data model with conventional locking scheme, the database may be implemented using any commercially available database management system (DBMS), database server, file system, or other data repository that provides a functionally equivalent implementation. The terms "table", "row", and "column" are used in this document only as examples of logical data structures.

TPC-C uses terminology and metrics that are similar to other benchmarks, originated by the TPC or others. Such similarity in terminology does not in any way imply that TPC-C results are comparable to other benchmarks. The only benchmark results comparable to TPC-C are other TPC-C results conformant with the same revision.

Despite the fact that this benchmark offers a rich environment that emulates many OLTP applications, this benchmark does not reflect the entire range of OLTP requirements. In addition, the extent to which a customer can achieve the results reported by a vendor is highly dependent on how closely TPC-C approximates the customer application. The relative performance of systems derived from this benchmark does not necessarily hold for other workloads or environments. Extrapolations to any other environment are not recommended.

Benchmark results are highly dependent upon workload, specific application requirements, and systems design and implementation. Relative system performance will vary as a result of these and other factors. Therefore, TPC-C should not be used as a substitute for a specific customer application benchmarking when critical capacity planning and/or product evaluation decisions are contemplated.

© 2005 Hewlett-Packard Company. All rights reserved.

Abstract

Overview

This report documents the methodology and results of the TPC Benchmark C test conducted on the HP ProLiant DL585-G1. The operating system used for the benchmark was Windows Server 2003, Enterprise Edition SP1. The DBMS used was Microsoft SQL Server 2000 Enterprise Edition SP4.

TPC Benchmark C Metrics

The standard TPC Benchmark C metrics, tpmC (transactions per minute), price per tpmC (three year capital cost per measured tpmC), and the availability date are reported as:

187,296 tpmC
USD $2.04 per tpmC

The availability date is May 31, 2005.

Standard and Executive Summary Statements

The following pages contain executive summary of results for this benchmark.

Auditor

The benchmark configuration, environment and methodology were audited by Lorna Livingtree of Performance Metrics, Inc. to verify compliance with the relevant TPC specifications.

© 2005 Hewlett-Packard Company. All rights reserved.

Hewlett-Packard Company	HP ProLiant DL585-G1 2.2GHz Dual Core 4P/8 core C/S with 8 HP ProLiant DL360G4	TPC-C Rev. 5.3 **Report Date: April 21, 2005**

Total System Cost	TPC-C Throughput	Price/Performance	Availability Date
USD $381,466	**187,296**	**USD $2.04**	**May 31, 2005**

Processors	Database Manager	Operating System	Other Software	Number of Users
4 AMD Opteron 2.2 GHz DC – Server 16 Intel Xeon 3.6 GHz – Clients	Microsoft SQL Server 2000 Enterprise Edition SP4	Windows Server 2003, Enterprise Edition SP1	Microsoft Visual C++ Microsoft COM+	**151680**

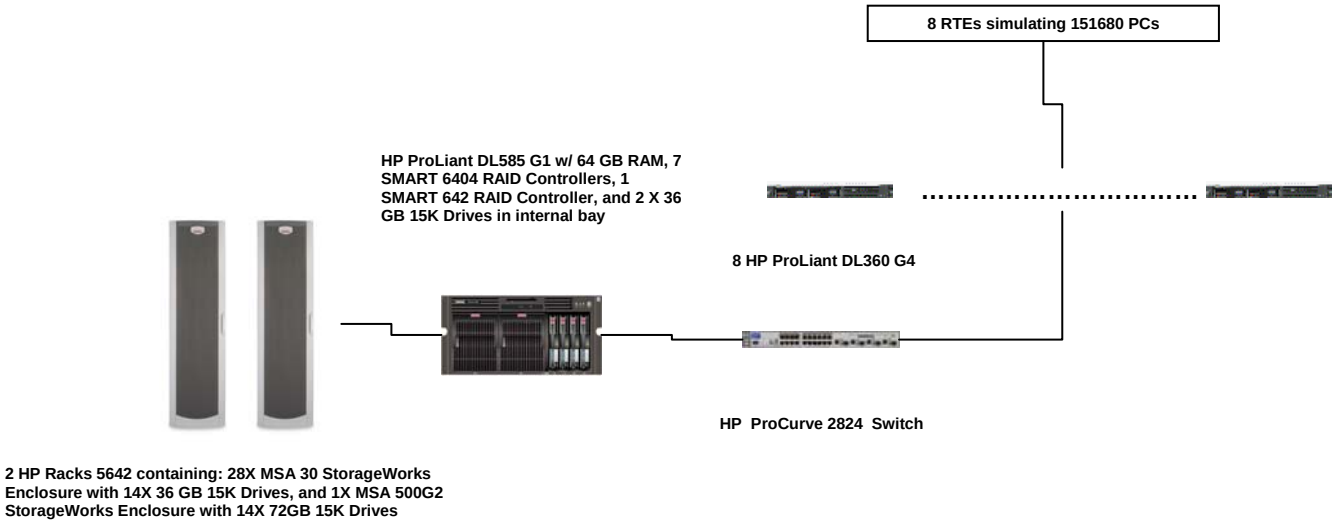

	Server		**Each Client**	
System Components	Quantity	Description	Quantity	Description
Processor	4	2.2 GHz DC AMD Opteron w/ 1M Cache	2	3.6 GHz Intel Xeon w/ 1MB cache
Memory	16	4 GB DDR (2 X 2 GB)	2	512MB
Disk Controllers	1 7 1	Integrated Smart 5i Controller SMART 6404 Array Controllers SMART 642 Array Controller	1	Integrated SMART 6i Controller
Disk Drives	14 394	72 GB SCSI Drive 36 GB SCSI Drive	2	36 GB SCSI Drive
Total Storage		14,314.18 GB		36 GB

© 2005 Hewlett-Packard Company. All rights reserved.

Hewlett-Packard Company	HP ProLiant DL585-G1 2.2GHz DC-4P/8C Client/Server	TPC-C Rev. 5.3 Report Date:	21-Apr-05

Description	Part Number	Third Party Brand	Pricing	Unit Price	Qty	Extended Price	3 yr. Maint. Price
Server Hardware							
DL585 2.2GHz dual core (2P) 2GB PC2700 with Dual port gigabit NIC	383357-001		1	15,999	1	15,999	
DL585 2.2GHz/2700 dual core Processor Option Kit	383391-B21		1	5,699	2	11,398	
4GB PC2100 DDR SDRAM DIMM 2x2048 WW	300682-B21		1	2,499	16	39,984	
HP Storageworks MSA 30 SB Storage	302969-B21		1	2,978	28	83,384	
HP Modular Smart Array 500 G2 Storage includes 2 Smart Array 642 Adapter	335880-B21		1	4,499	1	4,499	
HP Modular Smart Array 500 G2 Controller	335881-B21		1	2,499	1	2,499	
HP Smart Array 6404/256MB Controller	273914-B21		1	1,899	7	13,293	
HP s7540 17in. CRT Monitor	PF997AA#ABA		1	149	1	149	
HP PS/2 Scroll Mouse carbonite	DG169AV		1	5	1	5	
PS/2 Standard Keyboard	DG170AV#ABA		1	10	1	10	
HP 5642 Pallet Unassembled Rack	358254-B21		1	689	2	1,378	
UPS R1500 XR Low Voltage US	204404-001		1	866	1	866	
36GB 15K U320 Pluggable Hard Drive	286776-B22		1	299	394	117,806	
36GB 15K U320 Pluggable Hard Drive (10% Spares external drives)	286776-B22		1	299	40		11,960
72GB 15K U320 Pluggable Hard Drive	286778-B22		1	569	14	7,966	
72GB 15K U320 Pluggable Hard Drive (2 spares)	286778-B22		1	569	2		1,138
HP CP 3Y 4H 24x7 HW 500 Srs 4-Hour 24 Hour x 7 Day Coverage 3 Years	401782-002		1	1,795	1		1,795
Carepaq 3YR 24X7/4HR "FM-4E724-36 3YR 24X7/4HR EMPTY DISK ENCL"	171242-002		1	157	28		4,396
HP 3y 4h 24x7 MSA500 HW Support	U6456E		1	1,950	1		1,950
					Subtotal	**299,236**	**21,239**
Server Software							
Microsoft SQL Server 2000 Enterprise Edition(per processor)	810-00846	Microsoft	2	16,541	4	66,164	Incl Below
Microsoft Visual C++ Standard	254-00170	Microsoft	2	109	1	109	Incl Below
Microsoft Windows 2003 Server, Enterprise Edition SP1	P72-00264	Microsoft	2	2,399	1	2,399	Incl Below
Microsoft Problem Resolution Services		Microsoft	2	245	1		245
					Subtotal	**68,672**	**245**
Client Hardware							
HP DL360G4 X3.6GHz \ 1GB SCSI US Rack Server	360528-001		1	2,799	8	22,392	
Dual Integrated Gigabit NIC, Integrated Smart Array Controller 6i							
Intel Xeon 3.6GHz 1MB DL360G4 Processor	354583-B21		1	1,139	8	9,112	
36GB 15K U320 Pluggable Hard Drive	286776-B22		1	299	16	4,784	
FM-EL724-36 3YR 24X7 4HR ENTRY 300 SVR	162675-002		1	599	8		4,792
					Subtotal	**36,288**	**4,792**
Client Software							
Windows Server 2000, Standard Edition	C11-00821	Microsoft	2	738	8	5,904	Incl. Above
					Subtotal	**5,904**	**0**
User Connectivity							
HP ProCurve Switch 2824	J4903A#ABA		1	2499	1	2,499	
HP CP for HP ProCurve Networking products 3 Yr 4 hr/24x7	U2856E		1	1000	1		1,000
					Subtotal	**2,499**	**1,000**
Large Purchase and Cash discount (See Note 1)	16.0%		1			**($54,084)**	**($4,325)**
					Total	**$358,515**	**$22,951**

Prices used in TPC benchmarks reflect the actual prices a customer would pay for a one-time purchase of the stated components. Individually negotiated discounts are not permitted. Special prices based on assumptions about past or future purchases are not permitted. All discounts reflect standard pricing policies for the listed components. For complete details, see the pricing sections of the TPC benchmark pricing specifications. If you find that the stated prices are not available according to these terms, please inform the TPC at pricing@tpc.org. Thank you.

Three-Year Cost of Ownership: USD	**$381,466**
tpmC Rating:	**187296.00**
$ / tpmC: USD	**$2.04**

Pricing: 1=HP Direct 2= Microsoft

Note 1 = Discount based on HP Direct guidence and large cash purchase level.

Note2: The benchmark results and test methodology were audited by Lorna Livingtree of Performance Metrics, Inc.

Note3: For ordering information call 877.277.3366

© 2005 Hewlett-Packard Company. All rights reserved.

Numerical Quantities Summary

MQTH, Computed Maximum Qualified Throughput 187, 296 tpmC

Response Times (in seconds)	Average	90%	Maximum
New-Order	0.69	1.15	6.70
Payment	0.64	1.10	8.37
Order-Status	0.66	1.12	6.43
Delivery (interactive portion)	0.10	0.11	0.93
Delivery (deferred portion)	0.19	0.33	1.11
Stock-Level	1.34	1.94	7.01
Menu	0.10	0.11	0.93

Transaction Mix, in percent of total transaction	
New-Order	44.93%
Payment	43.05%
Order-Status	4.01%
Delivery	4.01%
Stock-Level	4.01%

Emulation Delay (in seconds)	Resp.Time	Menu
New-Order	0.10	0.10
Payment	0.10	0.10
Order-Status	0.10	0.10
Delivery (interactive)	0.10	0.10
Stock-Level	0.10	0.10

Keying/Think Times (in seconds)	Min.	Average	Max.
New-Order	18.00/0.00	18.02/12.06	18.26/120.61
Payment	3.00/0.00	3.02/12.06	3.26/120.61
Order-Status	2.00/0.00	2.02/10.06	2.26/100.61
Delivery (interactive)	2.00/0.00	2.02/5.07	2.25/50.61
Stock-Level	2.00/0.00	2.02/5.06	2.25/50.61

Test Duration	
Ramp-up time	34 minutes
Measurement interval	120 minutes
Transactions (all types) completed during measurement interval	52,033,964
Ramp down time	29 minutes

Checkpointing	
Number of checkpoints	4
Checkpoint interval	30 minutes

© 2005 Hewlett-Packard Company. All rights reserved.

General Items

Test Sponsor

A statement identifying the benchmark sponsor(s) and other participating companies must be provided.

This benchmark was sponsored by Hewlett-Packard Company. The benchmark was developed and engineered by Hewlett-Packard Company. Testing took place at HP benchmarking laboratories in Houston, Texas.

Application Code and Definition Statements

The application program (as defined in clause 2.1.7) must be disclosed. This includes, but is not limited to, the code implementing the five transactions and the terminal input output functions.

Appendix A contains all source code implemented in this benchmark.

Parameter Settings

Settings must be provided for all customer-tunable parameters and options which have been changed from the defaults found in actual products, including by not limited to:

- *Database options*
- *Recover/commit options*
- *Consistency locking options*
- *Operating system and application configuration parameters*

This requirement can be satisfied by providing a full list of all parameters.

Appendix C contains the tunable parameters to for the database, the operating system, and the transaction monitor.

Configuration Items

Diagrams of both measured and priced configurations must be provided, accompanied by a description of the differences.

The configuration diagram for both the tested and priced systems are included on the following page.

© 2005 Hewlett-Packard Company. All rights reserved.

Figure 1. Benchmarked Configuration

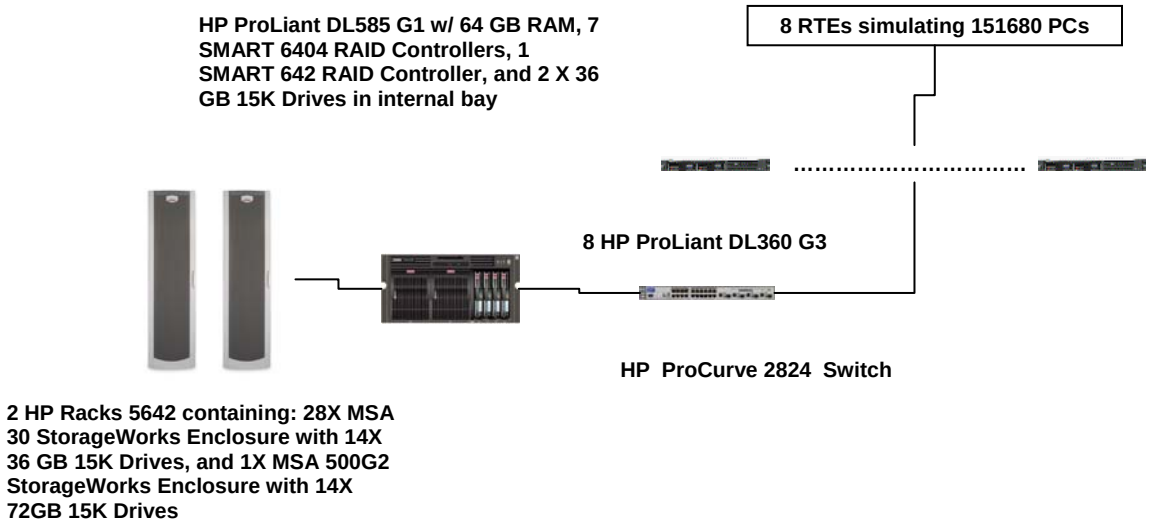

Figure 2. Priced Configuration

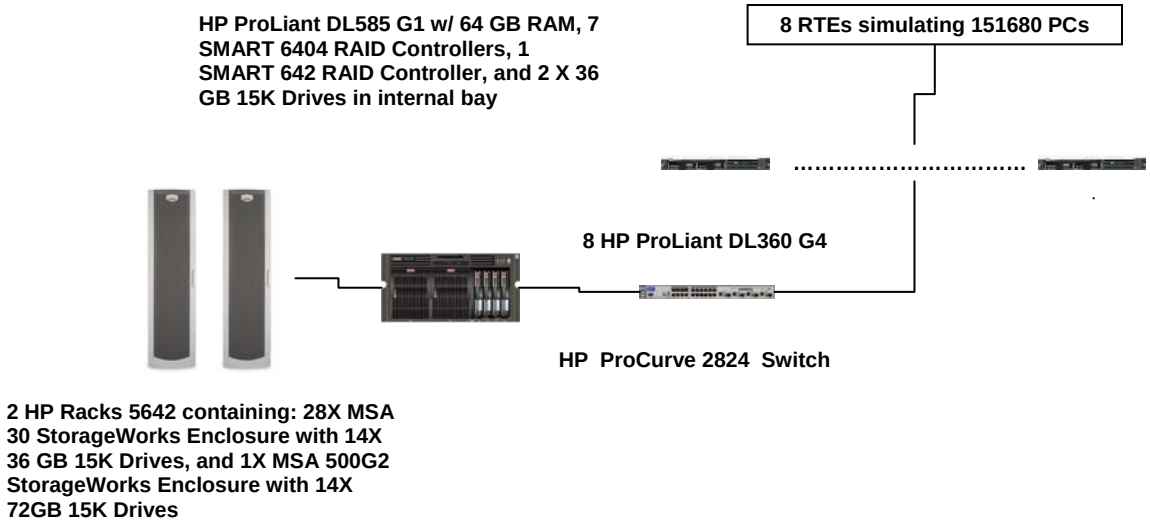

© 2005 Hewlett-Packard Company. All rights reserved.

Clause 1 Related Items

Table Definitions

Listing must be provided for all table definition statements and all other statements used to set up the database.

Appendix B contains the code used to define and load the database tables.

Physical Organization of Database

The physical organization of tables and indices within the database must be disclosed.
The tested configuration consisted of 392 drives at 36GB for database data, two 36GB drive for the operating system, and 14 drives at 72GB for database log. There were 392 X 36GB drives for database data on seven SMART 6404 controllers, 14 X 72GB drives for the SMART 642 controller connected to an MSA 500G2, and 2 X 36GB drives for the integrated Smart 5i controller.

Benchmarked Configuration:

Integrated Smart 5i Controller, Array A
LOGICAL DRIVE C: Total Capacity = 33.91 GB
Microsoft Windows Server 2003, Enterprise Edition SP1

SMART-642 Controller, Slot 3, Array A
LOGICAL DRIVE E: Total Capacity = 474.85 GB RAID 0+1
MSSQL_tpcc_log

SMART-6404 Controller, Slot 1A, Array A
LOGICAL DRIVE G: Total Capacity = 76.17GB RAID 0
Cs_fg
LOGICAL DRIVE W: Total Capacity = 436.70GB RAID 0+1
tpccback1

SMART-6404 Controller, Slot 1B, Array A
LOGICAL DRIVE G: Total Capacity = 76.17GB RAID 0
Cs_fg
LOGICAL DRIVE X: Total Capacity = 436.70GB RAID 0+1
tpccback2

SMART-6404 Controller, Slot 2A, Array A
LOGICAL DRIVE G: Total Capacity = 76.17GB RAID 0
Cs_fg

SMART-6404 Controller, Slot 2B, Array A
LOGICAL DRIVE G: Total Capacity = 76.17GB RAID 0
Cs_fg

SMART-6404 Controller, Slot 4A, Array A
LOGICAL DRIVE G: Total Capacity = 76.17GB RAID 0
Cs_fg

© 2005 Hewlett-Packard Company. All rights reserved.

SMART-6404 Controller, Slot 4B, Array A
LOGICAL DRIVE G: Total Capacity = 76.17GB RAID 0
Cs_fg

SMART-6404 Controller, Slot 5A, Array A
LOGICAL DRIVE G: Total Capacity = 76.17GB RAID 0
Cs_fg

SMART-6404 Controller, Slot 5B, Array A
LOGICAL DRIVE G: Total Capacity = 218.26GB RAID 0
Misc_fg

SMART-6404 Controller, Slot 6A, Array A
LOGICAL DRIVE G: Total Capacity = 76.17GB RAID 0
Cs_fg

SMART-6404 Controller, Slot 6B, Array A
LOGICAL DRIVE G: Total Capacity = 76.17GB RAID 0
Cs_fg

SMART-6404 Controller, Slot 7A, Array A
LOGICAL DRIVE G: Total Capacity = 76.17GB RAID 0
Cs_fg

SMART-6404 Controller, Slot 7B, Array A
LOGICAL DRIVE G: Total Capacity = 218.26GB RAID 0
Misc_fg

SMART-6404 Controller, Slot 8A, Array A
LOGICAL DRIVE G: Total Capacity = 76.17GB RAID 0
Cs_fg
LOGICAL DRIVE Y: Total Capacity = 436.70GB RAID 0+1
tpccback3

SMART-6404 Controller, Slot 8B, Array A
LOGICAL DRIVE G: Total Capacity = 76.17GB RAID 0
Cs_fg
LOGICAL DRIVE Z: Total Capacity = 436.70GB RAID 0+1
tpccback4

Priced Configuration vs. Measured Configuration:

The measured configuration used DL360G3 systems as the front end clients, and the priced configuration used DL360G4 systems.

Insert and Delete Operations

It must be ascertained that insert and/or delete operations to any of the tables can occur concurrently with the TPC-C transaction mix. Furthermore, any restrictions in the SUT database implementation that precludes inserts beyond the limits defined in Clause 1.4.11 must be disclosed. This includes the maximum number of rows that can be inserted and the minimum key value for these new rows.

All insert and delete functions were fully operational during the entire benchmark.

© 2005 Hewlett-Packard Company. All rights reserved.

Partitioning

While there are a few restrictions placed upon horizontal or vertical partitioning of tables and rows in the TPC-C benchmark, any such partitioning must be disclosed.

No partitioning was used in this benchmark.

Replication, Duplication or Additions

Replication of tables, if used, must be disclosed. Additional and/or duplicated attributes in any table must be disclosed along with a statement on the impact on performance.

No replications, duplications or additional attributes were used in this benchmark.

© 2005 Hewlett-Packard Company. All rights reserved.

Clause 2 Related Items

Random Number Generation

The method of verification for the random number generation must be described.

In the Benchcraft RTE from Microsoft, each driver engine uses an independent random number sequence. All of the users within a given driver draw from the same sequence.

The Benchcraft RTE computes random integers as described in “Random Numbers Generators: Good Ones Are Hard to Find." Communications of the ACM - October 1988 Volume 31 Number 10.

The seeds for each user were captured and verified by the auditor to be unique. In addition, the contents of the database were systematically searched, and randomly sampled by the auditor for patterns that would indicate the random number generator had affected any kind of a discernible pattern; none was found.

Input/Output Screen Layout

The actual layout of the terminal input/output screens must be disclosed.

All screen layouts followed the specifications exactly.

Priced Terminal Feature Verification

The method used to verify that the emulated terminals provide all the features described in Clause 2.2.2.4 must be explained. Although not specifically priced, the type and model of the terminals used for the demonstration in 8.1.3.3 must be disclosed and commercially available (including supporting software and maintenance).

The terminal attributes were verified by the auditor. The auditor manually exercised each specification on a representative HP ProLiant web server.

Presentation Manager or Intelligent Terminal

Any usage of presentation managers or intelligent terminals must be explained.

Application code running on the client machines implemented the TPC-C user interface. No presentation manager software or intelligent terminal features were used. The source code for the forms applications is listed in Appendix A.

Transaction Statistics

Table 2.1 lists the numerical quantities that Clauses 8.1.3.5 to 8.1.3.11 require.

Table 2.1 Transaction Statistics

Statistic		Value
New Order	Home warehouse order lines	99.00%
	Remote warehouse order lines	1.00%
	Rolled back transactions	1.00%
	Average items per order	10.00
Payment	Home warehouse payments	84.99%
	Remote warehouse payments	15.01%

© 2005 Hewlett-Packard Company. All rights reserved.

Statistic		Value
	Accessed by last name	60.01%
Order Status	Accessed by last name	60.04%
Transaction Mix	New Order Payment Order status Delivery Stock level	44.93% 43.05% 4.01% 4.01% 4.01%

Queuing Mechanism

The queuing mechanism used to defer the execution of the Delivery transaction must be disclosed.

Microsoft COM+ on each client machine served as the queuing mechanism to the database. Each delivery request was submitted to Microsoft COM+ asynchronously with control being returned to the client process immediately and the deferred delivery part completing asynchronously.

The source code is listed in Appendix A.

© 2005 Hewlett-Packard Company. All rights reserved.

Clause 3 Related Items

Transaction System Properties (ACID)

The results of the ACID tests must be disclosed along with a description of how the ACID requirements were met. This includes disclosing which case was followed for the execution of Isolation Test 7.

All ACID property tests were successful. The executions are described below.

Atomicity

The system under test must guarantee that the database transactions are atomic; the system will either perform all individual operations on the data or will assure that no partially completed operations leave any effects on the data.

Completed Transactions

A row was selected in a script from the warehouse, district and customer tables, and the balances noted. A payment transaction was started with the same warehouse, district and customer identifiers and a known amount. The payment transaction was committed and the rows were verified to contain correctly updated balances.

Aborted Transactions

A row was selected in a script from the warehouse, district and customer tables, and the balances noted. A payment transaction was started with the same warehouse, district and customer identifiers and a known amount. The payment transaction was rolled back and the rows were verified to contain the original balances.

Consistency

Consistency is the property of the application that requires any execution of a database transaction to take the database from one consistent state to another, assuming that the database is initially in a consistent state.

Consistency conditions one through four were tested using a script to issue queries to the database. The results of the queries verified that the database was consistent for all four tests.

A run was executed under full load lasting over two hours and included a checkpoint.

The script was executed again. The result of the same queries verified that the database remained consistent after the run.

Isolation

Sufficient conditions must be enabled at either the system or application level to ensure the required isolation defined above (clause 3.4.1) is obtained.

Isolation tests one through nine were executed using shell scripts to issue queries to the database. Each script included timestamps to demonstrate the concurrency of operations. The results of the queries were captured to files. The captured files were verified by the auditor to demonstrate the required isolation had been met.

In addition, the phantom tests and the stock level tests were executed and verified.

For Isolation test seven, case A was followed.

© 2005 Hewlett-Packard Company. All rights reserved.

Durability

The tested system must guarantee durability: the ability to preserve the effects of committed transaction and insure database consistency after recovery from any one of the failures listed in Clause 3.5.3.

Durable Media Failure

Loss of Data and Log

To demonstrate recovery from a permanent failure of durable medium containing DBMS logs and TPC-C tables, the following steps were executed. This test was executed on a fully scaled database of 15392 warehouses under a load of 15400 users.:

- The total number of New Orders was determined by the sum of D_NEXT_O_ID of all rows in the DISTRICT table giving the beginning count.
- The RTEs were started with 10% of the benchmark users.
- The test was allowed to run for a minimum of 10 minutes.
- One log disk was removed from the MSA 500 drive cabinet.
- Since the disk was mirrored, processing was not interrupted. This was verified by checking the users status on the RTE.
- One of the data disks was removed from one MSA 30 drive cabinet.
- When Microsoft SQL Server recorded errors about not being able to access the database, the RTE was shut down.
- Microsoft SQL Server was shutdown, and the system rebooted after replacing the pulled drives with new drives..
- After the RAID recovery process finished Microsoft SQL Server was started, and a dump of the transaction log was taken .
- The database was restored from backup and the transaction log dump was applied.
- Consistency condition #3 was executed and verified.
- Step 2 was repeated and the difference between the first and second counts was noted.
- An RTE report was generated for the entire run time giving the number of NEW-ORDERS successfully returned to the RTE.
- The counts in steps 12 and 13 were compared and the results verified that all committed transactions had been successfully recovered.
- Samples were taken from the RTE files and used to query the database to demonstrate successful transactions had corresponding rows in the ORDER table.

© 2005 Hewlett-Packard Company. All rights reserved.

Instantaneous Interruption and Loss of Memory

Because loss of power erases the contents of memory, the instantaneous interruption and the loss of memory tests were combined into a single test. This test was executed on a fully scaled database of 15392 warehouses (of which 15168 were used) under a full load of 151680 users. The following steps were executed:

- The total number of New Orders was determined by the sum of D_NEXT_O_ID of all rows in the DISTRICT table giving the beginning count.
- The RTE was started with 151680 users.
- The test was allowed to run for a minimum of 10 minutes.
- Pulling the power cords from the SUT induced system crash and loss of memory. No battery backup or Uninterruptible Power Supply (UPS) were used to preserve the contents of memory.
- The RTE was paused then stopped.
- Power was restored and the system restarted.
- Microsoft SQL Server was restarted and performed an automatic recovery.
- Consistency condition #3 was executed and verified.
- Step 1 was repeated and the difference between the first and second counts was noted.
- An RTE report was generated for the entire run time giving the number of NEW-ORDERS successfully returned to the RTE.
- The counts in step 9 and 10 were compared and the results verified that all committed transactions had been successfully recovered.
- Samples were taken from the RTE files and used to query the database to demonstrate successful transactions had corresponding rows in the ORDER table.

© 2005 Hewlett-Packard Company. All rights reserved.

Clause 4 Related Items

Initial Cardinality of Tables

The cardinality (e.g. number of rows) of each table, as it existed at the start of the benchmark run, must be disclosed. If the database was over-scaled and inactive rows of the WAREHOUSE table were deleted, the cardinality of the WAREHOUSE table as initially configured and the number of rows deleted must be disclosed.

Table 4.1 Number of Rows for Server

Table	Cardinality as built
Warehouse	15392
District	153920
Customer	461,760,000
History	461,760,000
Orders	461,760,000
New Order	138,528,000
Order Line	4,617,588,740
Stock	1,539,200,000
Item	100,000
Deleted Warehouses	0

Database Layout

The distribution of tables and logs across all media must be explicitly depicted for tested and priced systems.

The benchmarked configuration used 7 SMART-6404 Array controllers with 4 SCSI channels each. Each controller is capable of accessing up to 14 disk drives per channel and supports RAID 0, RAID 0+1, and RAID 5 per each logical volume configured. The data tables were stored on 14 RAID arrays of (28) 36GB 15K drives each. Each array was configured as RAID 0 and housed a logical drive for database data. Some of these controllers also housed a RAID 0+1 volume used for backup of the database. The SMART-642 Array controller was connected to an MSA 500G2 which had one array consisting of (14) 72GB 15K drives, and housed a RAID 0+1 logical volume for the database log. The operating system was housed internally on the integrated Smart 5i controller on a RAID 1 set of (2) 36GB 15K drives. The Array Accelerators on the data controllers were configured as 100% write cache and were enabled for all logical drives. The SMART 642 controller had no physical cache module installed, but the redundant controllers in the MSA 500G2 had cache enabled for the transaction log. All RAID volumes used hardware RAID.

Section 1.2 of this report details the distribution of database tables across all disks. The code that creates the file groups and tables is included in Appendix B.

© 2005 Hewlett-Packard Company. All rights reserved.

Type of Database

A statement must be provided that describes:

- *The data model implemented by DBMS used (e.g. relational, network, hierarchical).*
- *The database interface (e.g. embedded, call level) and access language (e.g. SQL, DL/1, COBOL read/write used to implement the TPC-C transaction. If more than one interface/access language is used to implement TPC-C, each interface/access language must be described and a list of which interface/access language is used with which transaction type must be disclosed.*

Microsoft SQL Server 2000 Enterprise Edition is a relational DBMS.

The interface used was Microsoft SQL Server stored procedures accessed with Remote Procedure Calls embedded in C code.

Database Mapping

The mapping of database partitions/replications must be explicitly described.

The database was not replicated.

60 Day Space

Details of the 60-day space computations along with proof that the database is configured to sustain 8 hours of growth for the dynamic tables (Order, Order-Line, and History) must be disclosed.

To calculate the space required to sustain the database log for 8 hours of growth at steady state, the following steps were followed:

- The free space on the log file was queried using *dbcc sqlperf(logspace).*
- Transactions were run against the database with a full load of users.
- The free space was again queried using *dbcc sqlperf(logspace).*
- The space used was calculated as the difference between the first and second query.
- The number of NEW-ORDERS was verified from the difference in the sum(d_next_o_id) taken from before and after the run.
- The space used was divided by the number of NEW-ORDERS giving a space used per NEW-ORDER transaction.
- The space used per transaction was multiplied by the measured tpmC rate times 480 minutes.

The same methodology was used to compute growth requirements for dynamic tables Order, Order-Line and History.

The details of both the 8-hour transaction log space requirement and the 60-day space requirement is shown in Appendix D.

© 2005 Hewlett-Packard Company. All rights reserved.

Clause 5 Related Items

Throughput

Measured tpmC must be reported

Measured tpmC 187,296tpmC
Price per tpmC USD $2.04

Response Times

Ninetieth percentile, maximum and average response times must be reported for all transaction types as well as for the menu response time.

Table 5.2: Response Times

Type	Average	90th %	Maximum
New-Order	0.69	1.15	6.70
Payment	0.64	1.10	8.37
Order-Status	0.66	1.12	6.43
Interactive Delivery	0.10	0.11	0.93
Deferred Delivery	0.19	0.33	1.11
Stock-Level	1.34	1.94	7.01
Menu	0.10	0.11	0.93

Keying and Think Times

The minimum, the average, and the maximum keying and think times must be reported for each transaction type.

Table 5.3: Keying Times

Type	Minimum	Average	Maximum
New-Order	18.00	18.02	18.26
Payment	3.00	3.02	3.26
Order-Status	2.00	2.02	2.26
Interactive Delivery	2.00	2.02	2.25
Stock-Level	2.00	2.02	2.25

© 2005 Hewlett-Packard Company. All rights reserved.

Table 5.4: Think Times

Type	Minimum	Average	Maximum
New-Order	0.00	12.06	120.61
Payment	0.00	12.06	120.61
Order-Status	0.00	10.06	100.61
Interactive Delivery	0.00	5.07	50. 61
Stock-Level	0.00	5.06	50. 61

Response Time Frequency Distribution Curves and Other Graphs

Response Time frequency distribution curves (see Clause 5.6.1) must be reported for each transaction type.

The performance curve for response times versus throughput (see Clause 5.6.2) must be reported for the New-Order transaction.

Think Time frequency distribution curves (see Clause 5.6.3) must be reported for each transaction type.

Keying Time frequency distribution curves (see Clause 5.6.4) must be reported for each transaction type.

A graph of throughput versus elapsed time (see Clause 5.6.5) must be reported for the New-Order transaction.

© 2005 Hewlett-Packard Company. All rights reserved.

Figure 2. New Order Response Time Distribution

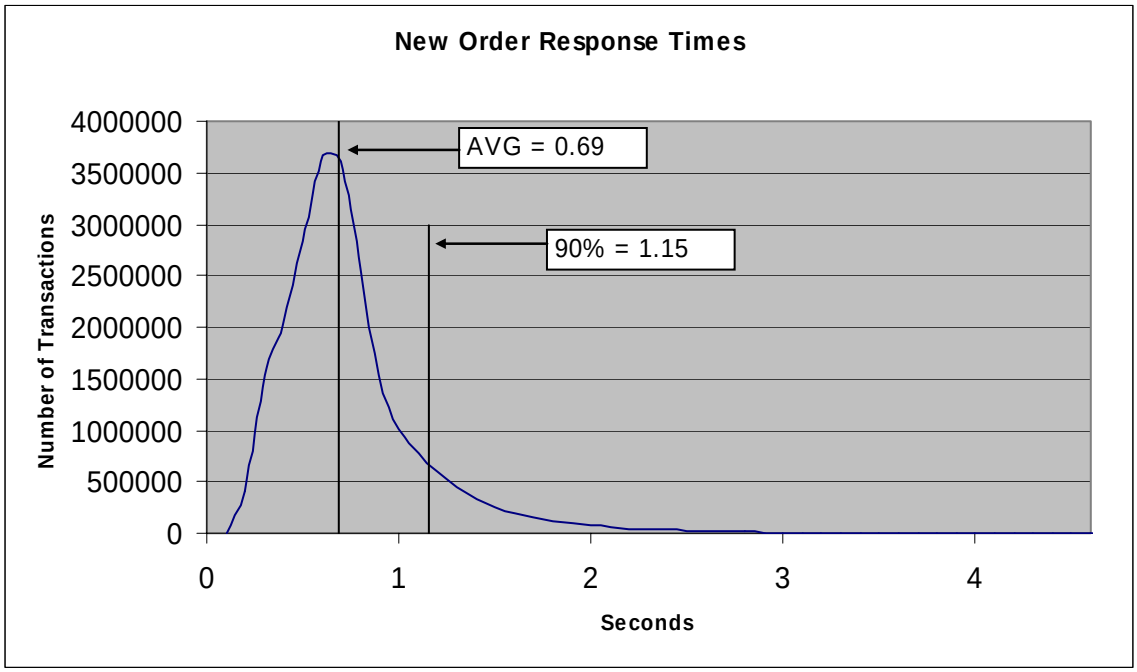

Figure 3. Payment Response Time Distribution

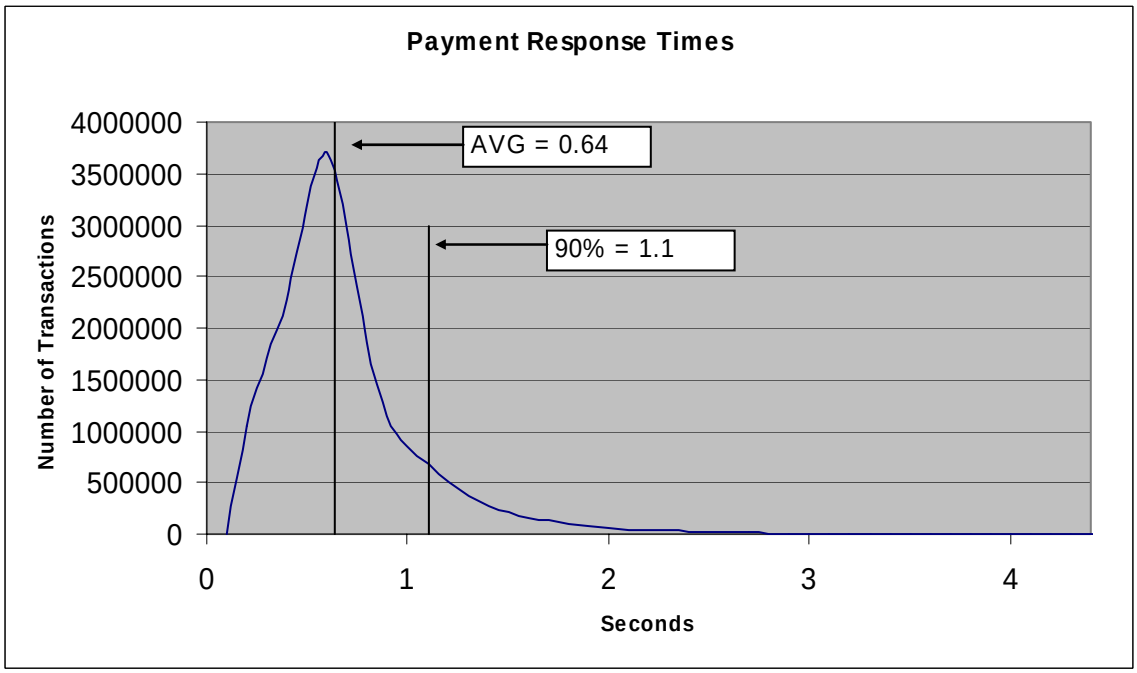

© 2005 Hewlett-Packard Company. All rights reserved.

Figure 4. Order Status Response Time Distribution

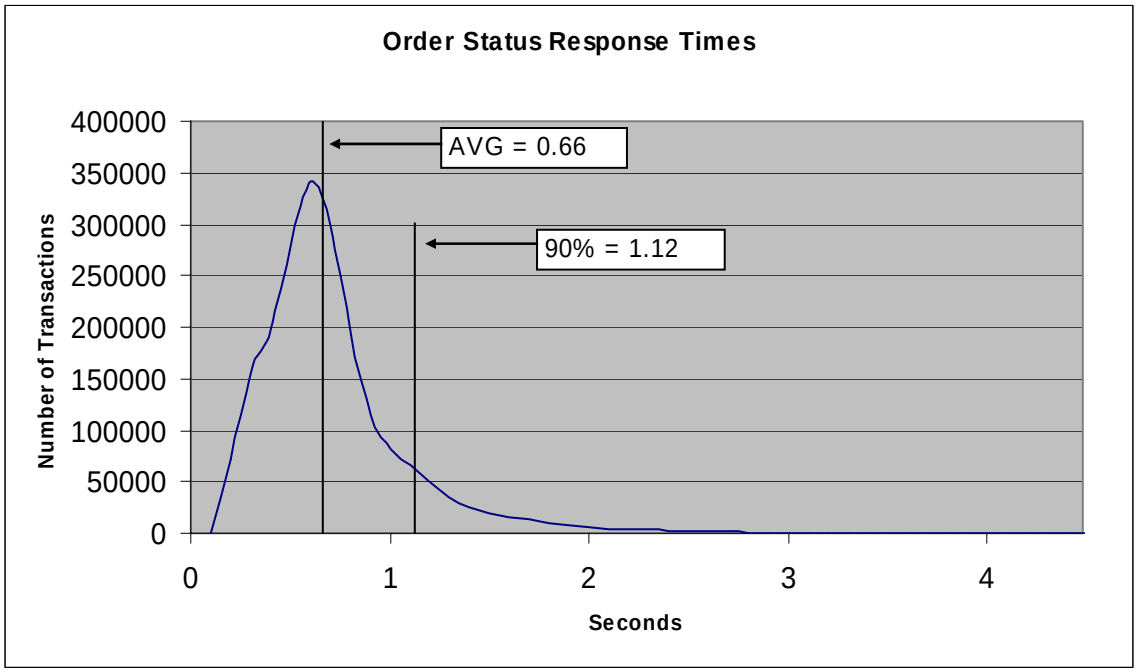

Figure 5. Delivery Response Time Distribution

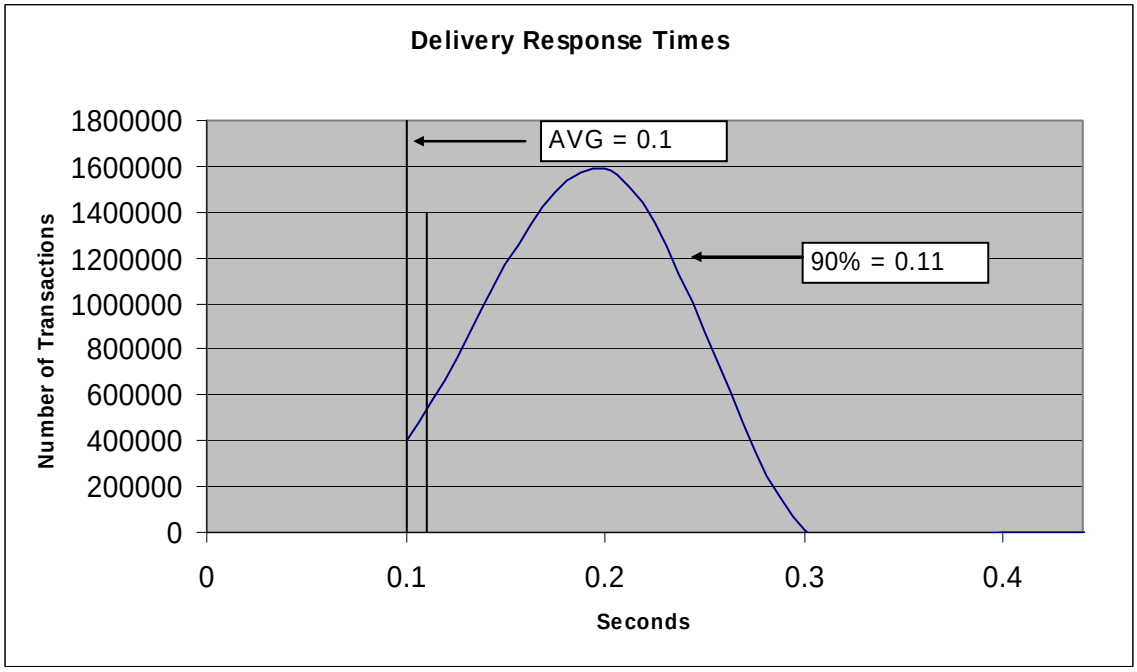

© 2005 Hewlett-Packard Company. All rights reserved.

Figure 6. Stock Level Response Time Distribution

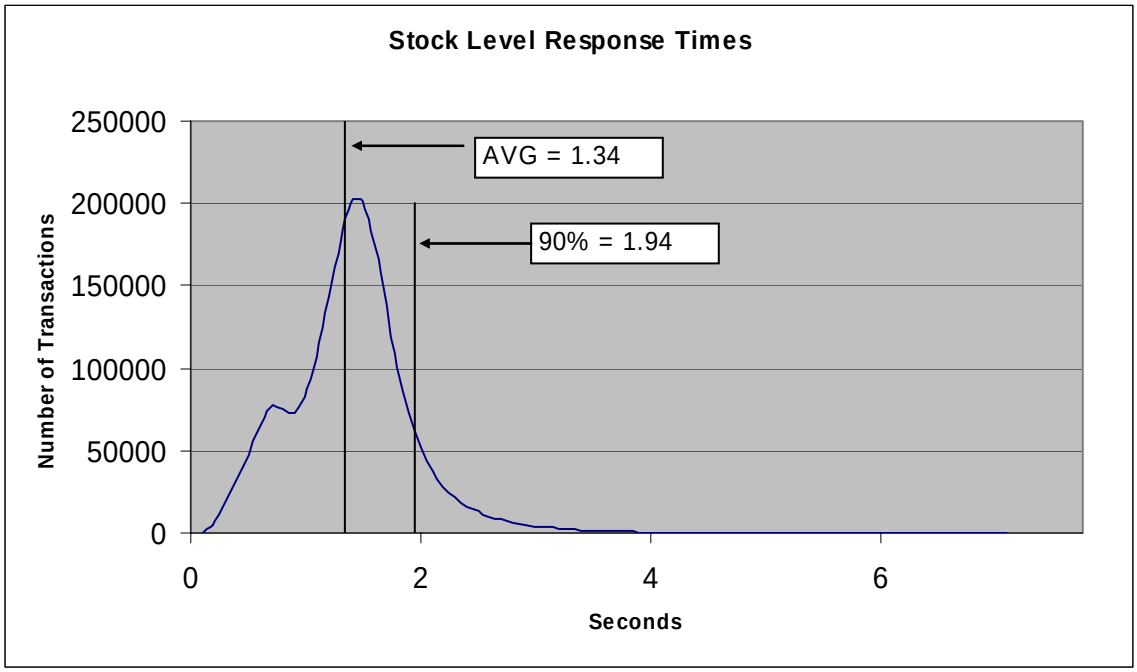

Figure 7. Response Time vs. Throughput

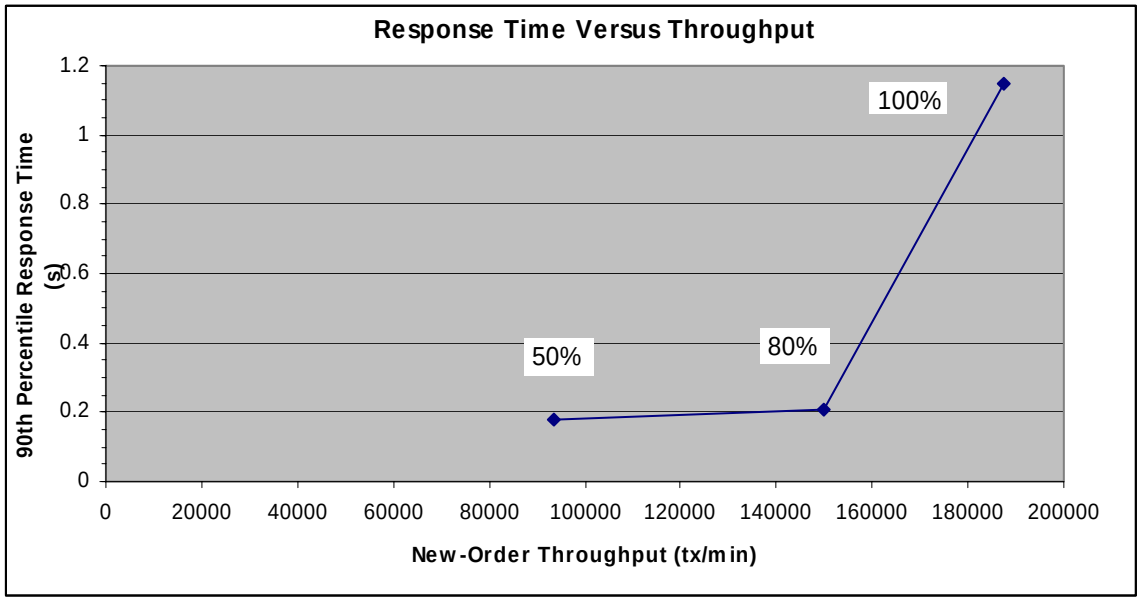

© 2005 Hewlett-Packard Company. All rights reserved.

Figure 8. New Order Think Time Distribution

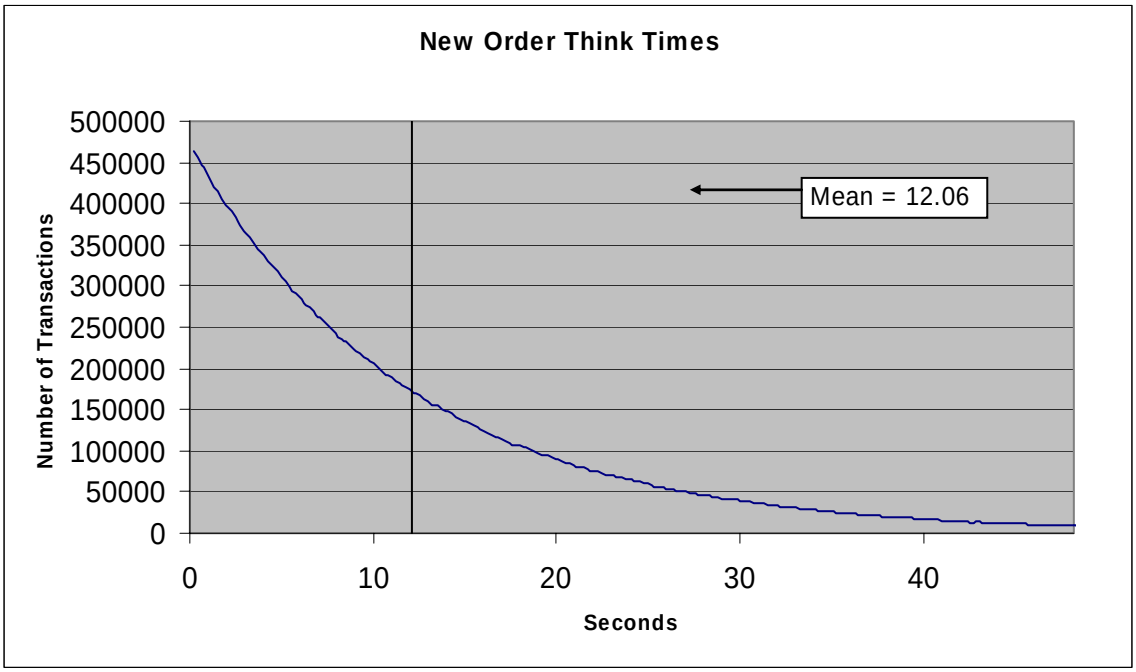

Figure 9. Throughput vs. Time Distribution

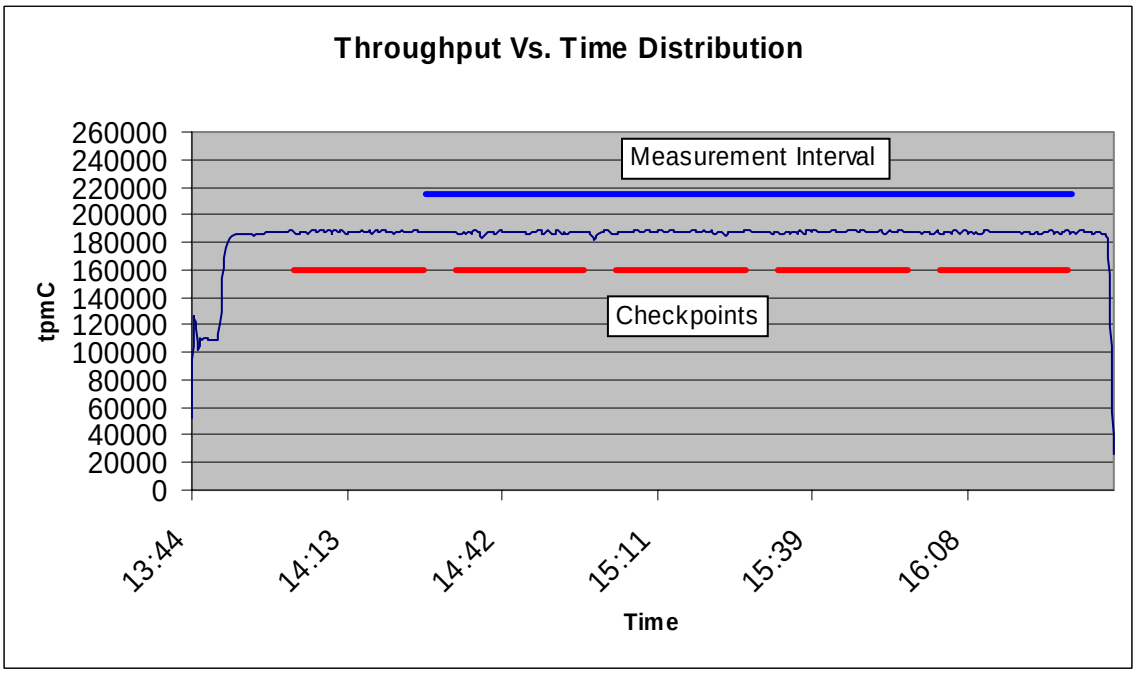

© 2005 Hewlett-Packard Company. All rights reserved.

Steady State Determination

The method used to determine that the SUT had reached a steady state prior to commencing the measurement interval must be disclosed.

Steady state was determined using real time monitor utilities from the RTE. Steady state was further confirmed by the throughput data collected during the run and graphed in Figure 10.

Work Performed During Steady State

A description of how the work normally performed during a sustained test (for example checkpointing, writing redo/undo log records, etc.), actually occurred during the measurement interval must be reported.

The RTE generated the required input data to choose a transaction from the menu. This data was timestamped. The input screen for the requested transaction was returned and timestamped. The difference between these two timestamps was the menu response time. The RTE writes to the log file once per transaction on selective fields such as order id. There is one log file per driver engine.

The RTE generated the required input data for the chosen transaction. It waited to complete the minimum required key time before transmitting the input screen. The transmission was timestamped. The return of the screen with the required response data was timestamped. The difference between these two timestamps was the response time for that transaction.

The RTE then waited the required think time interval before repeating the process starting at selecting a transaction from the menu.

The RTE transmissions were sent to application processes running on the client machines through Ethernet LANs. These client application processes handled all screen I/O as well as all requests to the database on the server. The applications communicated with the database server over gigabit Ethernet LANs using DBLIB and RPC calls.

To perform checkpoints at specific intervals, the SQL Server *recovery interval* was set to 96 and a script was written to schedule multiple checkpoints at specific intervals. The script included a wait time between each checkpoint equal to 30 minutes so that the checkpoint interval was an integral multiple of the measurement interval, which was 120 minutes. The checkpoint script was started manually after the RTE had all users logged in and the database had achieved steady state.

At each checkpoint, Microsoft SQL Server wrote to disk all memory pages that had been updated but not yet physically written to disk. The positioning of the measurement interval is depicted on the graph in Figure 10.

Measurement Period Duration

A statement of the duration of the measurement interval for the reported Maximum Qualified Throughput (tpmC) must be included.

The reported measured interval was exactly 120 minutes long.

© 2005 Hewlett-Packard Company. All rights reserved.

Regulation of Transaction Mix

The method of regulation of the transaction mix (e.g., card decks or weighted random distribution) must be described. If weighted distribution is used and the RTE adjusts the weights associated with each transaction type, the maximum adjustments to the weight from the initial value must be disclosed.

The RTE was given a weighted random distribution, which was not adjusted during the run.

Transaction Statistics

The percentage of the total mix for each transaction type must be disclosed. The percentage of New-Order transactions rolled back as a result of invalid item number must be disclosed. The average number of order-lines entered per New-Order transaction must be disclosed. The percentage of remote order lines per New-Order transaction must be disclosed. The percentage of remote Payment transactions must be disclosed. The percentage of customer selections by customer last name in the Payment and Order-Status transactions must be disclosed. The percentage of Delivery transactions skipped due to there being fewer than necessary orders in the New-Order table must be disclosed.

Table 5.5: Transaction Statistics

Statistic		Value
New Order	Home warehouse order lines	99.00%
	Remote warehouse order lines	1.00%
	Rolled back transactions	1.00%
	Average items per order	10.00
Payment	Home warehouse payments	84.99%
	Remote warehouse payments	15.01%
	Accessed by last name	60.01%
Delivery	Skipped transactions (interactive)	0
	Skipped transactions (deferred)	0
Order Status	Accessed by last name	60.04%
Transaction Mix	New Order	44.93%
	Payment	43.05%
	Order status	4.01%
	Delivery	4.01%
	Stock level	4.01%

© 2005 Hewlett-Packard Company. All rights reserved.

Checkpoint Count and Location

The number of checkpoints in the Measurement Interval, the time in seconds from the start of the Measurement Interval to the first checkpoint, and the Checkpoint Interval must be disclosed.

The initial checkpoint was started 34 minutes after the start of the ramp-up. Subsequent checkpoints occurred every 30 minutes. Each checkpoint in the measurement interval lasted approximately 24 minutes. The measurement interval contains four checkpoints.

Checkpoint Duration

The start time and duration in seconds of at least the four longest checkpoints during the Measurement Interval must be disclosed.

Checkpoint Start Time	Duration
14:33:34.55pm.	24 minutes, 0 second
15:03:31.52pm	24 minutes, 0 seconds
15:33:28.52pm.	24 minutes, 0 seconds
16:03:25.54pm	24 minutes, 0 seconds

© 2005 Hewlett-Packard Company. All rights reserved.

Clause 6 Related Items

RTE Descriptions

If the RTE is commercially available, then its inputs must be specified. Otherwise, a description must be supplied of what inputs (e.g., scripts) to the RTE had been used.

The RTE used was Microsoft Benchcraft RTE. Benchcraft is a proprietary tool provided by Microsoft and is not commercially available. The RTE's input is listed in Appendix A.

Emulated Components

It must be demonstrated that the functionality and performance of the components being emulated in the Driver System are equivalent to the priced system. The results of the test described in Clause 6.6.3.4 must be disclosed.

The driver system consisted of 8 HP ProLiant servers. These driver machines emulated the users' web browsers.

Functional Diagrams

A complete functional diagram of both the benchmark configuration and the configuration of the proposed (target) system must be disclosed. A detailed list of all hardware and software functionality being performed on the Driver System and its interface to the SUT must be disclosed.

The driver system performed the data generation and input functions of the priced display device. It also captured the input and output data and timestamps for post-processing of the reported metrics. No other functionality was included on the driver system.

Section 1.4 of this report contains detailed diagrams of both the benchmark configuration and the priced configuration.

Networks

The network configuration of both the tested services and proposed (target) services that are being represented and a thorough explanation of exactly which parts of the proposed configuration are being replaced with the Driver System must be disclosed.

The bandwidth of the networks used in the tested/priced configuration must be disclosed.

In the tested configuration, 8 driver (RTE) machines were connected through a gigabit Ethernet switch to the client machines at 1Gbs, thus providing the path from the RTEs to the clients. The server (SUT) was connected to the clients through a gigabit Ethernet switch on a separate LAN.

The priced configuration was connected in the same manner as the tested configuration.

Operator Intervention

If the configuration requires operator intervention (see Clause 6.6.6), the mechanism and the frequency of this intervention must be disclosed.

This configuration does not require any operator intervention to sustain eight hours of the reported throughput.

© 2005 Hewlett-Packard Company. All rights reserved.

Clause 7 Related Items

System Pricing

A detailed list of hardware and software used in the priced system must be reported. Each separately orderable item must have vendor part number, description, and release/revision level, and either general availability status or committed delivery data. If package-pricing is used, vendor part number of the package and a description uniquely identifying each of the components of the package must be disclosed. Pricing source and effective date(s) of price(s) must also be reported.

The total 3 year price of the entire configuration must be reported, including: hardware, software, and maintenance charges. Separate component pricing is recommended. The basis of all discounts used must be disclosed.

The details of the hardware and software are reported in the front of this report as part of the executive summary. All third party quotations are included at the end of this report as Appendix E.

Availability, Throughput, and Price Performance

The committed delivery date for general availability (availability date) of products used in the price calculation must be reported. When the priced system included products with different availability dates, the reported availability date for the priced system must be the date at which all components are committed to be available.

A statement of the measured tpmC as well as the respective calculations for the 5-year pricing, price/performance (price/tpmC), and the availability date must be included.

- **Maximum Qualified Throughput** **187,296tpmC**
- **Price per tpmC** **USD $2.04 per tpmC**
- **Availability** **May 31, 2005**

Country Specific Pricing

Additional Clause 7 related items may be included in the Full Disclosure Report for each country specific priced configuration. Country specific pricing is subject to Clause 7.1.7

This system is being priced for the United States of America.

Usage Pricing

For any usage pricing, the sponsor must disclose:

- *Usage level at which the component was priced.*
- *A statement of the company policy allowing such pricing.*

The component pricing based on usage is shown below:

- 8 Microsoft Windows Server 2000 Standard Edition
- 1 Microsoft Windows Server 2003, Enterprise Edition SP1
- 1 Microsoft SQL Server 2000 Enterprise Edition SP4 (per processor)
- 1 Microsoft Visual C++
- HP Servers include 3 years of support.

© 2005 Hewlett-Packard. All rights reserved.

Clause 9 Related Items

Auditor's Report

The auditor's name, address, phone number, and a copy of the auditor's attestation letter indicating compliance must be included in the Full Disclosure Report.

This implementation of the TPC Benchmark C was audited by Lorna Livingtree of Performance Metrics, Inc.

Performance Metrics, Inc.
PO Box 984
Klamath CA 95548
(phone) 707-482-0523
(fax) 707-482-0575
e-mail: lornaL@perfmetrics.com

Availability of the Full Disclosure Report

The Full Disclosure Report must be readily available to the public at a reasonable charge, similar to the charges for similar documents by the test sponsor. The report must be made available when results are made public. In order to use the phrase "TPC Benchmark™ C", the Full Disclosure Report must have been submitted to the TPC Administrator as well as written permission obtained to distribute same.

Requests for this TPC Benchmark C Full Disclosure Report should be sent to:

TPC
Presidio of San Francisco
Building 572B Ruger St. (surface)
P.O. Box 29920 (mail)
San Francisco, CA 94129-0920

or

Hewlett-Packard Company
Database Performance Engineering
P.O. Box 692000
Houston, TX 77269-2000

© 2005 Hewlett-Packard Company. All rights reserved.

PERFORMANCE METRICS INC.
TPC Certified Auditors

April 14, 2005

Mr. David Adams
Database Performance Engineer
Hewlett-Packard Company
20555 SH 249
Houston, TX 77070

I have verified by remote the TPC Benchmark™ C for the following configuration:

Platform: HP ProLiant DL585-G1
Database Manager: Microsoft SQL Server 2000 Enterprise Edition SP4
Operating System: Microsoft Windows Server 2003 Enterprise Edition SP1
Transaction Monitor: Microsoft COM+

System Under Test:				
CPU's	Memory	Disks (total)	90% Response	TpmC
4 dual core Opteron 2.2 GHz	Main: 64 GB	394 @ 36 GB 14 @ 72 GB	1.15	187,296

In my opinion, these performance results were produced in compliance with the TPC requirements for the benchmark. The following attributes of the benchmark were given special attention:

- The transactions were correctly implemented.
- The database files were properly sized.
- The database was properly scaled with 15,392 warehouses, of which, 15,168 were active during the measurement interval.
- The ACID properties were successfully demonstrated.
- Input data was generated according to the specified percentages.
- Eight hours of mirrored log space was present on the tested system.
- Eight hours of growth space for the dynamic tables was present on the tested system.
- The data for the 60 days space calculation was verified.

PO Box 984, Klamath, CA 95548
(707) 482-0523 fax: (707) 482-0575 email: LornaL@PerfMetrics.com

© 2005 Hewlett-Packard Company. All rights reserved.

PERFORMANCE METRICS INC.
TPC Certified Auditors

- The steady state portion of the test was 120 minutes.
- There was one complete checkpoint in steady state before the measured interval.
- There were 4 checkpoints started and completed inside the measured interval.
- The system pricing was checked for major components and maintenance.
- Third party quotes were verified for compliance.

Auditor Notes: None

Sincerely,

Lorna Livingtree

Lorna Livingtree
Auditor

PO Box 984, Klamath, CA 95548
(707) 482-0523 fax: (707) 482-0575 email: LornaL@PerfMetrics.com
Page 2

© 2005 Hewlett-Packard Company. All rights reserved.

Appendix A: Source Code

The client source code is listed below.

Methods.h

```
/*        FILE:                METHODS.H
 *                                     Microsoft
TPC-C Kit Ver. 4.20.000
 *                                     Copyright
Microsoft, 1999
 *              All Rights Reserved
 *
 *                                     not yet
audited
 *
 *        PURPOSE:  Header file for COM components.
 *
 *  Change history:
 *                  4.20.000 - first version
 */


enum COMPONENT_ERROR
{
          ERR_MISSING_REGISTRY_ENTRIES = 1,
          ERR_LOADDLL_FAILED,
          ERR_GETPROCADDR_FAILED,
          ERR_UNKNOWN_DB_PROTOCOL
};

class CCOMPONENT_ERR : public CBaseErr
{
          public:
                    CCOMPONENT_ERR(COMPONENT_ERROR
Err)
                    {
                              m_Error = Err;
                              m_szTextDetail = NULL;
                              m_SystemErr = 0;
                              m_szErrorText = NULL;
                    };

                    CCOMPONENT_ERR(COMPONENT_ERROR
Err, char *szTextDetail, DWORD dwSystemErr)
                    {
                              m_Error = Err;
                              m_szTextDetail = new
char[strlen(szTextDetail)+1];
                              strcpy( m_szTextDetail,
szTextDetail );
                              m_SystemErr =
dwSystemErr;
                              m_szErrorText = NULL;
                    };

                    ~CCOMPONENT_ERR()
                    {
                              if (m_szTextDetail !=
NULL)
                                        delete []
m_szTextDetail;
                              if (m_szErrorText !=
NULL)
                                        delete []
m_szErrorText;
                    };

                    COMPONENT_ERROR     m_Error;
                    char
          *m_szTextDetail;
                    char
          *m_szErrorText;
                    DWORD
          m_SystemErr;

                    int ErrorType() {return
ERR_TYPE_COMPONENT;};
                    int ErrorNum() {return m_Error;};
                    char *ErrorText();
};


static void WriteMessageToEventLog(LPTSTR lpszMsg);


/////////////////////////////////////////////////////
//////////////////////
// CTPCC_Common
class CTPCC_Common :
          public ITPCC,
          public IObjectControl,
          public IObjectConstruct,
          public
CComObjectRootEx<CComSingleThreadModel>
{
public:
BEGIN_COM_MAP(CTPCC_Common)
          COM_INTERFACE_ENTRY(ITPCC)
          COM_INTERFACE_ENTRY(IObjectControl)
          COM_INTERFACE_ENTRY(IObjectConstruct)
END_COM_MAP()

          CTPCC_Common();
          ~CTPCC_Common();

// ITPCC
public:
          HRESULT __stdcall NewOrder(
          VARIANT txn_in, VARIANT* txn_out);
          HRESULT __stdcall Payment(
          VARIANT txn_in, VARIANT* txn_out);
          HRESULT __stdcall Delivery(
          VARIANT txn_in, VARIANT* txn_out) {return
E_NOTIMPL;}
          HRESULT __stdcall StockLevel( VARIANT
txn_in, VARIANT* txn_out);
          HRESULT __stdcall OrderStatus(
          VARIANT txn_in, VARIANT* txn_out);

          HRESULT __stdcall CallSetComplete();

// IObjectControl
          STDMETHODIMP_(BOOL) CanBePooled() { return
m_bCanBePooled; }
          STDMETHODIMP Activate() { return S_OK; }
          // we don't support COM Services
transactions (no enlistment)
          STDMETHODIMP_(void) Deactivate() { /*
nothing to do */ }

// IObjectConstruct
          STDMETHODIMP Construct(IDispatch * pUnk);

          // helper methods
private:
          BOOL                m_bCanBePooled;
          CTPCC_BASE          *m_pTxn;

          struct COM_DATA
          {
                    int retval;
                    int error;
                    union
                    {
                              NEW_ORDER_DATA
          NewOrder;
                              PAYMENT_DATA
          Payment;
                              DELIVERY_DATA
          Delivery;
                              STOCK_LEVEL_DATA
          StockLevel;
                              ORDER_STATUS_DATA
          OrderStatus;
                    } u;
          };

};

/////////////////////////////////////////////////////
//////////////////////
// CTPCC
class CTPCC :
          public CTPCC_Common,
          public CComCoClass<CTPCC, &CLSID_TPCC>
{
public:
DECLARE_REGISTRY_RESOURCEID(IDR_TPCC)

BEGIN_COM_MAP(CTPCC)
          COM_INTERFACE_ENTRY2(IUnknown,
CComObjectRootEx)
          COM_INTERFACE_ENTRY_CHAIN(CTPCC_Common)
END_COM_MAP()
```


©2005 Hewlett-Packard Company. All rights reserved.

```
};


/////////////////////////////////////////////////////
//////////////////////
// CNewOrder
class CNewOrder :
          public CTPCC_Common,
          public CComCoClass<CNewOrder,
&CLSID_NewOrder>
{
public:
DECLARE_REGISTRY_RESOURCEID(IDR_NEWORDER)

BEGIN_COM_MAP(CNewOrder)
          COM_INTERFACE_ENTRY2(IUnknown,
CComObjectRootEx)
          COM_INTERFACE_ENTRY_CHAIN(CTPCC_Common)
END_COM_MAP()

// ITPCC
public:
//        HRESULT __stdcall NewOrder(
          VARIANT txn_in, VARIANT* txn_out) {return
E_NOTIMPL;}
          HRESULT __stdcall Payment(
          VARIANT txn_in, VARIANT* txn_out) {return
E_NOTIMPL;}
          HRESULT __stdcall StockLevel( VARIANT
txn_in, VARIANT* txn_out) {return E_NOTIMPL;}
          HRESULT __stdcall OrderStatus(
          VARIANT txn_in, VARIANT* txn_out) {return
E_NOTIMPL;}
};


          ////////////////////////////////////////
////////////////////////////////
// COrderStatus
class COrderStatus :
          public CTPCC_Common,
          public CComCoClass<COrderStatus,
&CLSID_OrderStatus>
{
public:
DECLARE_REGISTRY_RESOURCEID(IDR_ORDERSTATUS)

BEGIN_COM_MAP(COrderStatus)
          COM_INTERFACE_ENTRY2(IUnknown,
CComObjectRootEx)
          COM_INTERFACE_ENTRY_CHAIN(CTPCC_Common)
END_COM_MAP()

// ITPCC
public:
          HRESULT __stdcall NewOrder(
          VARIANT txn_in, VARIANT* txn_out) {return
E_NOTIMPL;}
          HRESULT __stdcall Payment(
          VARIANT txn_in, VARIANT* txn_out) {return
E_NOTIMPL;}
          HRESULT __stdcall StockLevel( VARIANT
txn_in, VARIANT* txn_out) {return E_NOTIMPL;}
//        HRESULT __stdcall OrderStatus(
          VARIANT txn_in, VARIANT* txn_out) {return
E_NOTIMPL;}
};


/////////////////////////////////////////////////////
//////////////////////
// CPayment
class CPayment :
          public CTPCC_Common,
          public CComCoClass<CPayment,
&CLSID_Payment>
{
public:
DECLARE_REGISTRY_RESOURCEID(IDR_PAYMENT)

BEGIN_COM_MAP(CPayment)
          COM_INTERFACE_ENTRY2(IUnknown,
CComObjectRootEx)
          COM_INTERFACE_ENTRY_CHAIN(CTPCC_Common)
END_COM_MAP()

// ITPCC
public:
          HRESULT __stdcall NewOrder(
          VARIANT txn_in, VARIANT* txn_out) {return
E_NOTIMPL;}
//        HRESULT __stdcall Payment(
          VARIANT txn_in, VARIANT* txn_out) {return
E_NOTIMPL;}
          HRESULT __stdcall StockLevel( VARIANT
txn_in, VARIANT* txn_out) {return E_NOTIMPL;}
          HRESULT __stdcall OrderStatus(
          VARIANT txn_in, VARIANT* txn_out) {return
E_NOTIMPL;}
};


/////////////////////////////////////////////////////
//////////////////////
// CStockLevel
class CStockLevel :
          public CTPCC_Common,
          public CComCoClass<CStockLevel,
&CLSID_StockLevel>
{
public:
DECLARE_REGISTRY_RESOURCEID(IDR_STOCKLEVEL)

BEGIN_COM_MAP(CStockLevel)
          COM_INTERFACE_ENTRY2(IUnknown,
CComObjectRootEx)
          COM_INTERFACE_ENTRY_CHAIN(CTPCC_Common)
END_COM_MAP()

// ITPCC
public:
          HRESULT __stdcall NewOrder(
          VARIANT txn_in, VARIANT* txn_out) {return
E_NOTIMPL;}
          HRESULT __stdcall Payment(
          VARIANT txn_in, VARIANT* txn_out) {return
E_NOTIMPL;}
//        HRESULT __stdcall StockLevel( VARIANT
txn_in, VARIANT* txn_out) {return E_NOTIMPL;}
          HRESULT __stdcall OrderStatus(
          VARIANT txn_in, VARIANT* txn_out) {return
E_NOTIMPL;}
};
```

ReadRegistry.cpp

```
/*        FILE:               READREGISTRY.CPP
 *                                    Microsoft
TPC-C Kit Ver. 4.20.000
 *                                    Copyright
Microsoft, 1999
 *              All Rights Reserved
 *
 *                                    not yet
audited
 *
 *        PURPOSE:  Implementation for TPC-C Tuxedo
class.
 *        Contact:  Charles Levine
(clevine@microsoft.com)
 *
 *  Change history:
 *                  4.20.000 - first version
 */


/* FUNCTION: ReadTPCCRegistrySettings
 *
 * PURPOSE:         This function reads the NT
registry for startup parameters. There parameters are
 *                            under the TPCC key.
 *
 * RETURNS          FALSE = no errors
 *                            TRUE  = error reading
registry
 */
BOOL ReadTPCCRegistrySettings( TPCCREGISTRYDATA *pReg
)
{
          HKEY      hKey;
          DWORD     size;
          DWORD     type;
          DWORD     dwTmp;
          char      szTmp[256];

          if ( RegOpenKeyEx(HKEY_LOCAL_MACHINE,
"SOFTWARE\\Microsoft\\TPCC", 0, KEY_READ, &hKey) !=
ERROR_SUCCESS )
                    return TRUE;

          // determine database protocol to use; may
be either ODBC or DBLIB
          pReg->eDB_Protocol = Unspecified;
          size = sizeof(szTmp);
```


©2005 Hewlett-Packard Company. All rights reserved.

```
        if ( RegQueryValueEx(hKey, "DB_Protocol",
0, &type, (BYTE *)&szTmp, &size) == ERROR_SUCCESS )
        {
                if ( !stricmp(szTmp,
szDBNames[ODBC]) )
                        pReg->eDB_Protocol =
ODBC;
                else if ( !stricmp(szTmp,
szDBNames[DBLIB]) )
                        pReg->eDB_Protocol =
DBLIB;
        }

        pReg->eTxnMon = None;
        // determine txn monitor to use; may be
either TUXEDO, or blank
        size = sizeof(szTmp);
        if ( RegQueryValueEx(hKey, "TxnMonitor", 0,
&type, (BYTE *)&szTmp, &size) == ERROR_SUCCESS )
        {
                if ( !stricmp(szTmp,
szTxnMonNames[TUXEDO]) )
                        pReg->eTxnMon = TUXEDO;
                else if ( !stricmp(szTmp,
szTxnMonNames[ENCINA]) )
                        pReg->eTxnMon = ENCINA;
                else if ( !stricmp(szTmp,
szTxnMonNames[COM]) )
                        pReg->eTxnMon = COM;
        }

        pReg->bCOM_SinglePool = FALSE;
        size = sizeof(szTmp);
        if ( RegQueryValueEx(hKey,
"COM_SinglePool", 0, &type, (BYTE *)&szTmp, &size) ==
ERROR_SUCCESS )
        {
                if ( !stricmp(szTmp, "YES") )
                        pReg->bCOM_SinglePool =
TRUE;
        }

        pReg->dwMaxConnections = 0;
        size = sizeof(dwTmp);
        if ( ( RegQueryValueEx(hKey,
"MaxConnections", 0, &type, (LPBYTE)&dwTmp, &size) ==
ERROR_SUCCESS )
                && (type == REG_DWORD) )
                pReg->dwMaxConnections = dwTmp;

        pReg->dwMaxPendingDeliveries = 0;
        size = sizeof(dwTmp);
        if ( ( RegQueryValueEx(hKey,
"MaxPendingDeliveries", 0, &type, (LPBYTE)&dwTmp,
&size) == ERROR_SUCCESS )
                && (type == REG_DWORD) )
                pReg->dwMaxPendingDeliveries =
dwTmp;

        pReg->dwNumberOfDeliveryThreads = 0;
        size = sizeof(dwTmp);
        if ( ( RegQueryValueEx(hKey,
"NumberOfDeliveryThreads", 0, &type, (LPBYTE)&dwTmp,
&size) == ERROR_SUCCESS )
                && (type == REG_DWORD) )
                pReg->dwNumberOfDeliveryThreads =
dwTmp;

        size = sizeof( pReg->szPath );
        if ( RegQueryValueEx(hKey, "Path", 0,
&type, (BYTE *)&pReg->szPath, &size) != ERROR_SUCCESS
)
                pReg->szPath[0] = 0;

        size = sizeof( pReg->szDbServer );
        if ( RegQueryValueEx(hKey, "DbServer", 0,
&type, (BYTE *)&pReg->szDbServer, &size) !=
ERROR_SUCCESS )
                pReg->szDbServer[0] = 0;

        size = sizeof( pReg->szDbName );
        if ( RegQueryValueEx(hKey, "DbName", 0,
&type, (BYTE *)&pReg->szDbName, &size) !=
ERROR_SUCCESS )
                pReg->szDbName[0] = 0;

        size = sizeof( pReg->szDbUser );
        if ( RegQueryValueEx(hKey, "DbUser", 0,
&type, (BYTE *)&pReg->szDbUser, &size) !=
ERROR_SUCCESS )
                pReg->szDbUser[0] = 0;

        size = sizeof( pReg->szDbPassword );
        if ( RegQueryValueEx(hKey, "DbPassword", 0,
&type, (BYTE *)&pReg->szDbPassword, &size) !=
ERROR_SUCCESS )
                pReg->szDbPassword[0] = 0;

        RegCloseKey(hKey);

        return FALSE;
}
```

ReadRegistry.h

```
/*      FILE:           ReadRegistry.h
 *                              Microsoft
TPC-C Kit Ver. 4.20.000
 *                              Copyright
Microsoft, 1999
 *              All Rights Reserved
 *
 *                              not audited
 *
 *      PURPOSE:  Header for registry related code.
 *
 *  Change history:
 *              4.20.000 - first version
 */

enum DBPROTOCOL { Unspecified, ODBC, DBLIB };
const char *szDBNames[] = { "Unspecified", "ODBC",
"DBLIB" };

enum TXNMON { None, TUXEDO, ENCINA, COM };
const char *szTxnMonNames[] = { "NONE", "TUXEDO",
"ENCINA", "COM" };

//This structure defines the data necessary to keep
distinct for each terminal or client connection.
typedef struct _TPCCREGISTRYDATA
{
        enum DBPROTOCOL eDB_Protocol;
        enum TXNMON eTxnMon;
        BOOL bCOM_SinglePool;
        DWORD dwMaxConnections;
        DWORD dwMaxPendingDeliveries;
        DWORD dwNumberOfDeliveryThreads;
        char szPath[128];
        char szDbServer[32];
        char szDbName[32];
        char szDbUser[32];
        char szDbPassword[32];
} TPCCREGISTRYDATA, *PTPCCREGISTRYDATA;

BOOL ReadTPCCRegistrySettings( TPCCREGISTRYDATA *pReg
);
```

WebcInt.dsw

```
Microsoft Developer Studio Workspace File, Format
Version 6.00
# WARNING: DO NOT EDIT OR DELETE THIS WORKSPACE FILE!

###############################################
##########################

Project:
"db_dblib_dll"=.\db_dblib_dll\db_dblib_dll.dsp -
Package Owner=<4>

Package=<5>
{{{
}}}

Package=<4>
{{{
}}}

###############################################
##########################

Project: "db_odbc_dll"=.\db_odbc_dll\db_odbc_dll.dsp
- Package Owner=<4>

Package=<5>
{{{
}}}

Package=<4>
{{{
```


©2005 Hewlett-Packard Company. All rights reserved.

```
}}}

###################################################
#########################

Project: "install"=.\install\install.dsp - Package
Owner=<4>

Package=<5>
{{{
}}}

Package=<4>
{{{
    Begin Project Dependency
    Project_Dep_Name isapi_dll
    End Project Dependency
    Begin Project Dependency
    Project_Dep_Name tuxapp
    End Project Dependency
    Begin Project Dependency
    Project_Dep_Name db_dblib_dll
    End Project Dependency
    Begin Project Dependency
    Project_Dep_Name db_odbc_dll
    End Project Dependency
    Begin Project Dependency
    Project_Dep_Name tm_com_dll
    End Project Dependency
    Begin Project Dependency
    Project_Dep_Name tm_tuxedo_dll
    End Project Dependency
    Begin Project Dependency
    Project_Dep_Name tpcc_com_all
    End Project Dependency
    Begin Project Dependency
    Project_Dep_Name tpcc_com_ps
    End Project Dependency
}}}

###################################################
#########################

Project: "isapi_dll"=.\isapi_dll\isapi_dll.dsp -
Package Owner=<4>

Package=<5>
{{{
}}}

Package=<4>
{{{
    Begin Project Dependency
    Project_Dep_Name db_dblib_dll
    End Project Dependency
    Begin Project Dependency
    Project_Dep_Name db_odbc_dll
    End Project Dependency
    Begin Project Dependency
    Project_Dep_Name tm_tuxedo_dll
    End Project Dependency
    Begin Project Dependency
    Project_Dep_Name tm_com_dll
    End Project Dependency
    Begin Project Dependency
    Project_Dep_Name tm_encina_dll
    End Project Dependency
}}}

###################################################
#########################

Project: "tm_com_dll"=.\tm_com_dll\tm_com_dll.dsp -
Package Owner=<4>

Package=<5>
{{{
}}}

Package=<4>
{{{
    Begin Project Dependency
    Project_Dep_Name tpcc_com_ps
    End Project Dependency
    Begin Project Dependency
    Project_Dep_Name tpcc_com_all
    End Project Dependency
}}}

###################################################
#########################

Project:
"tm_encina_dll"=.\tm_encina_dll\tm_encina_dll.dsp -
Package Owner=<4>

Package=<5>
{{{
}}}

Package=<4>
{{{
}}}

###################################################
#########################

Project:
"tm_tuxedo_dll"=.\tm_tuxedo_dll\tm_tuxedo_dll.dsp -
Package Owner=<4>

Package=<5>
{{{
}}}

Package=<4>
{{{
}}}

###################################################
#########################

Project:
"tpcc_com_all"=.\tpcc_com_all\tpcc_com_all.dsp -
Package Owner=<4>

Package=<5>
{{{
}}}

Package=<4>
{{{
    Begin Project Dependency
    Project_Dep_Name tpcc_com_ps
    End Project Dependency
}}}

###################################################
#########################

Project: "tpcc_com_ps"=.\tpcc_com_ps\tpcc_com_ps.dsp
- Package Owner=<4>

Package=<5>
{{{
}}}

Package=<4>
{{{
}}}

###################################################
#########################

Project: "tuxapp"=.\tuxapp\tuxapp.dsp - Package
Owner=<4>

Package=<5>
{{{
}}}

Package=<4>
{{{
    Begin Project Dependency
    Project_Dep_Name db_dblib_dll
    End Project Dependency
    Begin Project Dependency
    Project_Dep_Name db_odbc_dll
    End Project Dependency
}}}

###################################################
#########################

Global:

Package=<5>
{{{
}}}

Package=<3>
{{{
}}}

###################################################
#########################
```


©2005 Hewlett-Packard Company. All rights reserved.

WebcInt.dsw

```
Microsoft Developer Studio Workspace File, Format
Version 6.00
# WARNING: DO NOT EDIT OR DELETE THIS WORKSPACE FILE!

#####################################################
##########################

Project:
"db_dblib_dll"=.\db_dblib_dll\db_dblib_dll.dsp -
Package Owner=<4>

Package=<5>
{{{
}}}

Package=<4>
{{{
}}}

#####################################################
##########################

Project: "db_odbc_dll"=.\db_odbc_dll\db_odbc_dll.dsp
- Package Owner=<4>

Package=<5>
{{{
}}}

Package=<4>
{{{
}}}

#####################################################
##########################

Project: "install"=.\install\install.dsp - Package
Owner=<4>

Package=<5>
{{{
}}}

Package=<4>
{{{
    Begin Project Dependency
    Project_Dep_Name isapi_dll
    End Project Dependency
    Begin Project Dependency
    Project_Dep_Name tuxapp
    End Project Dependency
    Begin Project Dependency
    Project_Dep_Name db_dblib_dll
    End Project Dependency
    Begin Project Dependency
    Project_Dep_Name db_odbc_dll
    End Project Dependency
    Begin Project Dependency
    Project_Dep_Name tm_com_dll
    End Project Dependency
    Begin Project Dependency
    Project_Dep_Name tm_tuxedo_dll
    End Project Dependency
    Begin Project Dependency
    Project_Dep_Name tpcc_com_all
    End Project Dependency
    Begin Project Dependency
    Project_Dep_Name tpcc_com_ps
    End Project Dependency
}}}

#####################################################
##########################

Project: "isapi_dll"=.\isapi_dll\isapi_dll.dsp -
Package Owner=<4>

Package=<5>
{{{
}}}

Package=<4>
{{{
    Begin Project Dependency
    Project_Dep_Name db_dblib_dll
    End Project Dependency
    Begin Project Dependency
    Project_Dep_Name db_odbc_dll
    End Project Dependency
    Begin Project Dependency
    Project_Dep_Name tm_tuxedo_dll
    End Project Dependency
    Begin Project Dependency
    Project_Dep_Name tm_com_dll
    End Project Dependency
    Begin Project Dependency
    Project_Dep_Name tm_encina_dll
    End Project Dependency
}}}

#####################################################
##########################

Project: "tm_com_dll"=.\tm_com_dll\tm_com_dll.dsp -
Package Owner=<4>

Package=<5>
{{{
}}}

Package=<4>
{{{
    Begin Project Dependency
    Project_Dep_Name tpcc_com_ps
    End Project Dependency
    Begin Project Dependency
    Project_Dep_Name tpcc_com_all
    End Project Dependency
}}}

#####################################################
##########################

Project:
"tm_encina_dll"=.\tm_encina_dll\tm_encina_dll.dsp -
Package Owner=<4>

Package=<5>
{{{
}}}

Package=<4>
{{{
}}}

#####################################################
##########################

Project:
"tm_tuxedo_dll"=.\tm_tuxedo_dll\tm_tuxedo_dll.dsp -
Package Owner=<4>

Package=<5>
{{{
}}}

Package=<4>
{{{
}}}

#####################################################
##########################

Project:
"tpcc_com_all"=.\tpcc_com_all\tpcc_com_all.dsp -
Package Owner=<4>

Package=<5>
{{{
}}}

Package=<4>
{{{
    Begin Project Dependency
    Project_Dep_Name tpcc_com_ps
    End Project Dependency
}}}

#####################################################
##########################

Project: "tpcc_com_ps"=.\tpcc_com_ps\tpcc_com_ps.dsp
- Package Owner=<4>

Package=<5>
{{{
}}}

Package=<4>
{{{
}}}

#####################################################
##########################
```


©2005 Hewlett-Packard Company. All rights reserved.

```
Project: "tuxapp"=.\tuxapp\tuxapp.dsp - Package
Owner=<4>

Package=<5>
{{{
}}}

Package=<4>
{{{
    Begin Project Dependency
    Project_Dep_Name db_dblib_dll
    End Project Dependency
    Begin Project Dependency
    Project_Dep_Name db_odbc_dll
    End Project Dependency
}}}

#####################################################
##########################

Global:

Package=<5>
{{{
}}}

Package=<3>
{{{
}}}

#####################################################
##########################
```

db_dblib_dll.dsp

```
# Microsoft Developer Studio Project File -
Name="db_dblib_dll" - Package Owner=<4>
# Microsoft Developer Studio Generated Build File,
Format Version 6.00
# ** DO NOT EDIT **

# TARGTYPE "Win32 (x86) Dynamic-Link Library" 0x0102

CFG=db_dblib_dll - Win32 IceCAP
!MESSAGE This is not a valid makefile. To build this
project using NMAKE,
!MESSAGE use the Export Makefile command and run
!MESSAGE
!MESSAGE NMAKE /f "db_dblib_dll.mak".
!MESSAGE
!MESSAGE You can specify a configuration when running
NMAKE
!MESSAGE by defining the macro CFG on the command
line. For example:
!MESSAGE
!MESSAGE NMAKE /f "db_dblib_dll.mak"
CFG="db_dblib_dll - Win32 IceCAP"
!MESSAGE
!MESSAGE Possible choices for configuration are:
!MESSAGE
!MESSAGE "db_dblib_dll - Win32 Release" (based on
"Win32 (x86) Dynamic-Link Library")
!MESSAGE "db_dblib_dll - Win32 Debug" (based on
"Win32 (x86) Dynamic-Link Library")
!MESSAGE "db_dblib_dll - Win32 IceCAP" (based on
"Win32 (x86) Dynamic-Link Library")
!MESSAGE

# Begin Project
# PROP AllowPerConfigDependencies 0
# PROP Scc_ProjName ""
# PROP Scc_LocalPath ""
CPP=cl.exe
MTL=midl.exe
RSC=rc.exe

!IF  "$(CFG)" == "db_dblib_dll - Win32 Release"

# PROP BASE Use_MFC 0
# PROP BASE Use_Debug_Libraries 0
# PROP BASE Output_Dir "Release"
# PROP BASE Intermediate_Dir "Release"
# PROP BASE Target_Dir ""
# PROP Use_MFC 0
# PROP Use_Debug_Libraries 0
# PROP Output_Dir ".\bin"
# PROP Intermediate_Dir ".\obj"
# PROP Ignore_Export_Lib 0
# PROP Target_Dir ""
# ADD BASE CPP /nologo /MT /W3 /GX /O2 /D "WIN32" /D
"NDEBUG" /D "_WINDOWS" /YX /FD /c
# ADD CPP /nologo /MD /W3 /GX /O2 /D "WIN32" /D
"NDEBUG" /D "_WINDOWS" /YX /FD /c
# ADD BASE MTL /nologo /D "NDEBUG" /mktyplib203 /o
"NUL" /win32
# ADD MTL /nologo /D "NDEBUG" /mktyplib203 /o "NUL"
/win32
# ADD BASE RSC /l 0x409 /d "NDEBUG"
# ADD RSC /l 0x409 /d "NDEBUG"
BSC32=bscmake.exe
# ADD BASE BSC32 /nologo
# ADD BSC32 /nologo
LINK32=link.exe
# ADD BASE LINK32 kernel32.lib user32.lib gdi32.lib
winspool.lib comdlg32.lib advapi32.lib shell32.lib
ole32.lib oleaut32.lib uuid.lib odbc32.lib
odbccp32.lib /nologo /subsystem:windows /dll
/machine:I386
# ADD LINK32 ntwdblib.lib kernel32.lib user32.lib
gdi32.lib winspool.lib comdlg32.lib advapi32.lib
shell32.lib ole32.lib oleaut32.lib uuid.lib /nologo
/subsystem:windows /dll /machine:I386
/out:".\bin/tpcc_dblib.dll"

!ELSEIF  "$(CFG)" == "db_dblib_dll - Win32 Debug"

# PROP BASE Use_MFC 0
# PROP BASE Use_Debug_Libraries 1
# PROP BASE Output_Dir "Debug"
# PROP BASE Intermediate_Dir "Debug"
# PROP BASE Target_Dir ""
# PROP Use_MFC 0
# PROP Use_Debug_Libraries 1
# PROP Output_Dir ".\bin"
# PROP Intermediate_Dir ".\obj"
# PROP Ignore_Export_Lib 0
# PROP Target_Dir ""
# ADD BASE CPP /nologo /MTd /W3 /Gm /GX /Zi /Od /D
"WIN32" /D "_DEBUG" /D "_WINDOWS" /YX /FD /c
# ADD CPP /nologo /MDd /W3 /Gm /GX /ZI /Od /D "WIN32"
/D "_DEBUG" /D "_WINDOWS" /YX /FD /c
# ADD BASE MTL /nologo /D "_DEBUG" /mktyplib203 /o
"NUL" /win32
# ADD MTL /nologo /D "_DEBUG" /mktyplib203 /o "NUL"
/win32
# ADD BASE RSC /l 0x409 /d "_DEBUG"
# ADD RSC /l 0x409 /d "_DEBUG"
BSC32=bscmake.exe
# ADD BASE BSC32 /nologo
# ADD BSC32 /nologo
LINK32=link.exe
# ADD BASE LINK32 kernel32.lib user32.lib gdi32.lib
winspool.lib comdlg32.lib advapi32.lib shell32.lib
ole32.lib oleaut32.lib uuid.lib odbc32.lib
odbccp32.lib /nologo /subsystem:windows /dll /debug
/machine:I386 /pdbtype:sept
# ADD LINK32 ntwdblib.lib kernel32.lib user32.lib
gdi32.lib winspool.lib comdlg32.lib advapi32.lib
shell32.lib ole32.lib oleaut32.lib uuid.lib /nologo
/subsystem:windows /dll /debug /machine:I386
/out:".\bin/tpcc_dblib.dll" /pdbtype:sept

!ELSEIF  "$(CFG)" == "db_dblib_dll - Win32 IceCAP"

# PROP BASE Use_MFC 0
# PROP BASE Use_Debug_Libraries 1
# PROP BASE Output_Dir "db_dblib"
# PROP BASE Intermediate_Dir "db_dblib"
# PROP BASE Ignore_Export_Lib 0
# PROP BASE Target_Dir ""
# PROP Use_MFC 0
# PROP Use_Debug_Libraries 1
# PROP Output_Dir ".\bin"
# PROP Intermediate_Dir ".\obj"
# PROP Ignore_Export_Lib 0
# PROP Target_Dir ""
# ADD BASE CPP /nologo /MDd /W3 /Gm /GX /Zi /Od /D
"WIN32" /D "_DEBUG" /D "_WINDOWS" /YX /FD /Gh /c
# ADD CPP /nologo /MD /W3 /Gm /GX /Zi /O2 /D "WIN32"
/D "NDEBUG" /D "_WINDOWS" /D "ICECAP" /YX /FD /Gh /c
# ADD BASE MTL /nologo /D "_DEBUG" /mktyplib203 /o
"NUL" /win32
# ADD MTL /nologo /D "_DEBUG" /mktyplib203 /o "NUL"
/win32
# ADD BASE RSC /l 0x409 /d "_DEBUG"
# ADD RSC /l 0x409 /d "_DEBUG"
BSC32=bscmake.exe
# ADD BASE BSC32 /nologo
# ADD BSC32 /nologo
LINK32=link.exe
# ADD BASE LINK32 ntwdblib.lib kernel32.lib
user32.lib gdi32.lib winspool.lib comdlg32.lib
advapi32.lib shell32.lib ole32.lib oleaut32.lib
uuid.lib /nologo /subsystem:windows /dll /debug
```


©2005 Hewlett-Packard Company. All rights reserved.

```
/machine:I386 /out:".\bin/tpcc_dblib.dll"
/pdbtype:sept
# ADD LINK32 icap.lib ntwdblib.lib kernel32.lib
user32.lib gdi32.lib winspool.lib comdlg32.lib
advapi32.lib shell32.lib ole32.lib oleaut32.lib
uuid.lib /nologo /subsystem:windows /dll /debug
/machine:I386 /out:".\bin/tpcc_dblib.dll"
/pdbtype:sept

!ENDIF

# Begin Target

# Name "db_dblib_dll - Win32 Release"
# Name "db_dblib_dll - Win32 Debug"
# Name "db_dblib_dll - Win32 IceCAP"
# Begin Group "Source"

# PROP Default_Filter "*.cpp"
# Begin Source File

SOURCE=.\src\tpcc_dblib.cpp
# End Source File
# End Group
# Begin Group "Header"

# PROP Default_Filter "*.h"
# Begin Source File

SOURCE=..\common\src\error.h
# End Source File
# Begin Source File

SOURCE=.\src\tpcc_dblib.h
# End Source File
# Begin Source File

SOURCE=..\common\src\trans.h
# End Source File
# Begin Source File

SOURCE=..\common\src\txn_base.h
# End Source File
# End Group
# End Target
# End Project
```

db_odbc_dll.dsp

```
# Microsoft Developer Studio Project File -
Name="db_odbc_dll" - Package Owner=<4>
# Microsoft Developer Studio Generated Build File,
Format Version 6.00
# ** DO NOT EDIT **

# TARGTYPE "Win32 (x86) Dynamic-Link Library" 0x0102

CFG=db_odbc_dll - Win32 IceCAP
!MESSAGE This is not a valid makefile. To build this
project using NMAKE,
!MESSAGE use the Export Makefile command and run
!MESSAGE
!MESSAGE NMAKE /f "db_odbc_dll.mak".
!MESSAGE
!MESSAGE You can specify a configuration when running
NMAKE
!MESSAGE by defining the macro CFG on the command
line. For example:
!MESSAGE
!MESSAGE NMAKE /f "db_odbc_dll.mak" CFG="db_odbc_dll
- Win32 IceCAP"
!MESSAGE
!MESSAGE Possible choices for configuration are:
!MESSAGE
!MESSAGE "db_odbc_dll - Win32 Release" (based on
"Win32 (x86) Dynamic-Link Library")
!MESSAGE "db_odbc_dll - Win32 Debug" (based on "Win32
(x86) Dynamic-Link Library")
!MESSAGE "db_odbc_dll - Win32 IceCAP" (based on
"Win32 (x86) Dynamic-Link Library")
!MESSAGE

# Begin Project
# PROP AllowPerConfigDependencies 0
# PROP Scc_ProjName ""
# PROP Scc_LocalPath ""
CPP=cl.exe
MTL=midl.exe
RSC=rc.exe

!IF  "$(CFG)" == "db_odbc_dll - Win32 Release"

# PROP BASE Use_MFC 0
# PROP BASE Use_Debug_Libraries 0
# PROP BASE Output_Dir "Release"
# PROP BASE Intermediate_Dir "Release"
# PROP BASE Target_Dir ""
# PROP Use_MFC 0
# PROP Use_Debug_Libraries 0
# PROP Output_Dir ".\bin"
# PROP Intermediate_Dir ".\obj"
# PROP Ignore_Export_Lib 0
# PROP Target_Dir ""
# ADD BASE CPP /nologo /MT /W3 /GX /O2 /D "WIN32" /D
"NDEBUG" /D "_WINDOWS" /YX /FD /c
# ADD CPP /nologo /MD /W3 /GX /O2 /D "WIN32" /D
"NDEBUG" /D "_WINDOWS" /YX /FD /c
# ADD BASE MTL /nologo /D "NDEBUG" /mktyplib203 /o
/win32 "NUL"
# ADD MTL /nologo /D "NDEBUG" /mktyplib203 /o /win32
"NUL"
# ADD BASE RSC /l 0x409 /d "NDEBUG"
# ADD RSC /l 0x409 /d "NDEBUG"
BSC32=bscmake.exe
# ADD BASE BSC32 /nologo
# ADD BSC32 /nologo
LINK32=link.exe
# ADD BASE LINK32 kernel32.lib user32.lib gdi32.lib
winspool.lib comdlg32.lib advapi32.lib shell32.lib
ole32.lib oleaut32.lib uuid.lib odbc32.lib
odbccp32.lib /nologo /subsystem:windows /dll
/machine:I386
# ADD LINK32 kernel32.lib user32.lib gdi32.lib
winspool.lib comdlg32.lib advapi32.lib shell32.lib
ole32.lib oleaut32.lib uuid.lib odbc32.lib
odbccp32.lib /nologo /subsystem:windows /dll
/machine:I386 /out:".\bin/tpcc_odbc.dll"

!ELSEIF  "$(CFG)" == "db_odbc_dll - Win32 Debug"

# PROP BASE Use_MFC 0
# PROP BASE Use_Debug_Libraries 1
# PROP BASE Output_Dir "Debug"
# PROP BASE Intermediate_Dir "Debug"
# PROP BASE Target_Dir ""
# PROP Use_MFC 0
# PROP Use_Debug_Libraries 1
# PROP Output_Dir ".\bin"
# PROP Intermediate_Dir ".\obj"
# PROP Ignore_Export_Lib 0
# PROP Target_Dir ""
# ADD BASE CPP /nologo /MTd /W3 /Gm /GX /Zi /Od /D
"WIN32" /D "_DEBUG" /D "_WINDOWS" /YX /FD /c
# ADD CPP /nologo /MDd /W3 /GX /ZI /Od /D "WIN32" /D
"_DEBUG" /D "_WINDOWS" /YX /FD /c
# ADD BASE MTL /nologo /D "_DEBUG" /mktyplib203 /o
/win32 "NUL"
# ADD MTL /nologo /D "_DEBUG" /mktyplib203 /o /win32
"NUL"
# ADD BASE RSC /l 0x409 /d "_DEBUG"
# ADD RSC /l 0x409 /d "_DEBUG"
BSC32=bscmake.exe
# ADD BASE BSC32 /nologo
# ADD BSC32 /nologo
LINK32=link.exe
# ADD BASE LINK32 kernel32.lib user32.lib gdi32.lib
winspool.lib comdlg32.lib advapi32.lib shell32.lib
ole32.lib oleaut32.lib uuid.lib odbc32.lib
odbccp32.lib /nologo /subsystem:windows /dll /debug
/machine:I386 /pdbtype:sept
# ADD LINK32 kernel32.lib user32.lib gdi32.lib
winspool.lib comdlg32.lib advapi32.lib shell32.lib
ole32.lib oleaut32.lib uuid.lib odbc32.lib
odbccp32.lib /nologo /subsystem:windows /dll /debug
/machine:I386 /out:".\bin/tpcc_odbc.dll"
/pdbtype:sept

!ELSEIF  "$(CFG)" == "db_odbc_dll - Win32 IceCAP"

# PROP BASE Use_MFC 0
# PROP BASE Use_Debug_Libraries 1
# PROP BASE Output_Dir "db_odbc_"
# PROP BASE Intermediate_Dir "db_odbc_"
# PROP BASE Ignore_Export_Lib 0
# PROP BASE Target_Dir ""
# PROP Use_MFC 0
# PROP Use_Debug_Libraries 1
# PROP Output_Dir ".\bin"
# PROP Intermediate_Dir ".\obj"
# PROP Ignore_Export_Lib 0
# PROP Target_Dir ""
# ADD BASE CPP /nologo /MDd /W3 /Gm /GX /Zi /Od /D
"WIN32" /D "_DEBUG" /D "_WINDOWS" /YX /FD /Gh /c
# ADD CPP /nologo /MD /W3 /Gm /GX /Zi /O2 /D "WIN32"
/D "NDEBUG" /D "_WINDOWS" /D "ICECAP" /YX /FD /Gh /c
```


©2005 Hewlett-Packard Company. All rights reserved.

```
# ADD BASE MTL /nologo /D "_DEBUG" /mktyplib203 /o
/win32 "NUL"
# ADD MTL /nologo /D "_DEBUG" /mktyplib203 /o /win32
"NUL"
# ADD BASE RSC /l 0x409 /d "_DEBUG"
# ADD RSC /l 0x409 /d "_DEBUG"
BSC32=bscmake.exe
# ADD BASE BSC32 /nologo
# ADD BSC32 /nologo
LINK32=link.exe
# ADD BASE LINK32 kernel32.lib user32.lib gdi32.lib
winspool.lib comdlg32.lib advapi32.lib shell32.lib
ole32.lib oleaut32.lib uuid.lib odbc32.lib
odbccp32.lib /nologo /subsystem:windows /dll /debug
/machine:I386 /out:".\bin/tpcc_odbc.dll"
/pdbtype:sept
# ADD LINK32 icap.lib kernel32.lib user32.lib
gdi32.lib winspool.lib comdlg32.lib advapi32.lib
shell32.lib ole32.lib oleaut32.lib uuid.lib
odbc32.lib odbccp32.lib /nologo /subsystem:windows
/dll /debug /machine:I386 /out:".\bin/tpcc_odbc.dll"
/pdbtype:sept

!ENDIF

# Begin Target

# Name "db_odbc_dll - Win32 Release"
# Name "db_odbc_dll - Win32 Debug"
# Name "db_odbc_dll - Win32 IceCAP"
# Begin Group "Source"

# PROP Default_Filter "*.cpp"
# Begin Source File

SOURCE=.\src\tpcc_odbc.cpp
# End Source File
# End Group
# Begin Group "Header"

# PROP Default_Filter "*.h"
# Begin Source File

SOURCE=..\common\src\error.h
# End Source File
# Begin Source File

SOURCE=.\src\tpcc_odbc.h
# End Source File
# Begin Source File

SOURCE=..\common\src\trans.h
# End Source File
# Begin Source File

SOURCE=..\common\src\txn_base.h
# End Source File
# End Group
# End Target
# End Project
```

dlldata.c

```
/****************************************************
*****
   DllData file -- generated by MIDL compiler

        DO NOT ALTER THIS FILE

   This file is regenerated by MIDL on every IDL file
compile.

   To completely reconstruct this file, delete it and
rerun MIDL
   on all the IDL files in this DLL, specifying this
file for the
   /dlldata command line option

****************************************************
****/


#include <rpcproxy.h>

#ifdef __cplusplus
extern "C"   {
#endif

EXTERN_PROXY_FILE( tpcc_com_ps )


PROXYFILE_LIST_START
/* Start of list */
  REFERENCE_PROXY_FILE( tpcc_com_ps ),
/* End of list */
PROXYFILE_LIST_END


DLLDATA_ROUTINES( aProxyFileList, GET_DLL_CLSID )

#ifdef __cplusplus
}  /*extern "C" */
#endif

/* end of generated dlldata file */
```

error.h

```
/*        FILE:                ERROR.H
 *                                        Microsoft
TPC-C Kit Ver. 4.20.000
 *                                        Copyright
Microsoft, 1999
 *              All Rights Reserved
 *
 *                                        Version
4.10.000 audited by Richard Gimarc, Performance
Metrics, 3/17/99
 *
 *        PURPOSE:  Header file for error exception
classes.
 *
 *  Change history:
 *                  4.20.000 - updated rev number to
match kit
 *                  4.21.000 - fixed bug: ~CBaseErr
needed to be declared virtual
 */

#pragma once

#ifndef _INC_STRING
          #include <string.h>
#endif

const int m_szMsg_size = 512;
const int m_szApp_size = 64;
const int m_szLoc_size = 64;

//error message structure used in ErrorText routines
typedef struct _SERRORMSG
{
          int                 iError;
                    //error id of message
          char      szMsg[256];
          //message to sent to browser
} SERRORMSG;

typedef enum _ErrorLevel
{
          ERR_FATAL_LEVEL                          =
1,
          ERR_WARNING_LEVEL             = 2,
          ERR_INFORMATION_LEVEL         = 3
} ErrorLevel;


#define ERR_TYPE_LOGIC
                                                   -1
          //logic error in program; internal error
#define ERR_SUCCESS
                                                   0
          //success (a non-error error)
#define ERR_BAD_ITEM_ID
                                                   1
          //expected abort record in txnRecord
#define ERR_TYPE_DELIVERY_POST
                                        2
          //expected delivery post failed
#define   ERR_TYPE_WEBDLL
                                                   3
          //tpcc web generated error
#define   ERR_TYPE_SQL
                                                   4
          //sql server generated error
#define   ERR_TYPE_DBLIB
                                                   5
          //dblib generated error
#define   ERR_TYPE_ODBC
                                                   6
          //odbc generated error
```


©2005 Hewlett-Packard Company. All rights reserved.

```
#define ERR_TYPE_SOCKET
                                        7
          //error on communication socket client rte
only
#define ERR_TYPE_DEADLOCK
                                8
          //dblib and odbc only deadlock condition
#define ERR_TYPE_COM
                                        9
          //error from COM call
#define ERR_TYPE_TUXEDO
                                        10
          //tuxedo error
#define ERR_TYPE_OS
                                        11
          //operating system error
#define ERR_TYPE_MEMORY
                                        12
          //memory allocation error
#define ERR_TYPE_TPCC_ODBC
                                13
          //error from tpcc odbc txn module
#define ERR_TYPE_TPCC_DBLIB
                                14
          //error from tpcc dblib txn module
#define ERR_TYPE_DELISRV
                                15
          //delivery server error
#define ERR_TYPE_TXNLOG
                                        16
          //txn log error
#define ERR_TYPE_BCCONN
                                        17
          //Benchcraft connection class
#define ERR_TYPE_TPCC_CONN
                                18
          //Benchcraft connection class
#define ERR_TYPE_ENCINA
                                        19
          //Encina error
#define ERR_TYPE_COMPONENT
                                20
          //error from COM component
#define ERR_TYPE_RTE
                                        21
          //Benchcraft rte
#define ERR_TYPE_AUTOMATION
                                22
          //Benchcraft automation errors
#define ERR_TYPE_DRIVER
                                        23
          //Driver engine errors
#define ERR_TYPE_RTE_BASE
                                24
          //Framework errors
#define   ERR_BUF_OVERFLOW
                                25
          //Buffer overflow during receive
// TPC-W error types
#define ERR_TYPE_TPCW_CONN
                                50
          //Benchcraft connection class
#define ERR_TYPE_TPCW_HTML
                                        51
          //error from TpcwHtml dll
#define ERR_TYPE_TPCW_USER
                                        52
          //error from TPC-W user class
#define ERR_TYPE_TPCW_ENG_BASE
                                        53
#define ERR_TYPE_TPCW_ENG_OS
                        54
#define ERR_TYPE_HTML_RESP
                                        55
#define ERR_TYPE_TPCW_ODBC
                                        56
#define ERR_TYPE_SCHANNEL
                                        57

#define ERR_INS_MEMORY
          "Insufficient Memory to continue."
#define ERR_UNKNOWN
          "Unknown error."
#define ERR_MSG_BUF_SIZE                512
#define INV_ERROR_CODE                          -1
#define ERR_INS_BUF_OVERFLOW    "Insufficient Buffer
size to recieve HTML pages."



class CBaseErr
{
public:

          CBaseErr(LPCTSTR szLoc = NULL)
          {
                    m_idMsg             =
INV_ERROR_CODE;


                    if (szLoc)
                    {
                              m_szLoc = new
char[m_szLoc_size];
                              strcpy(m_szLoc, szLoc);
                    }
                    else
                              m_szLoc   = NULL;

                    m_szApp             = new
char[m_szApp_size];

          GetModuleFileName(GetModuleHandle(NULL),
m_szApp, m_szApp_size);
          }



          CBaseErr(int idMsg, LPCTSTR szLoc = NULL)
          {
                    m_idMsg             = idMsg;


                    if (szLoc)
                    {
                              m_szLoc = new
char[m_szLoc_size];
                              strcpy(m_szLoc, szLoc);
                    }
                    else
                              m_szLoc   = NULL;

                    m_szApp             = new
char[m_szApp_size];

          GetModuleFileName(GetModuleHandle(NULL),
m_szApp, m_szApp_size);
          }

          virtual ~CBaseErr(void)
          {
                    if (m_szApp)
                              delete [] m_szApp;
                    if (m_szLoc)
                              delete [] m_szLoc;
          };

          virtual void Draw(HWND hwnd, LPCTSTR szStr
= NULL)
          {
                    int                 j = 0;
                    char      szTmp[512];

                    if (szStr)
                              j = wsprintf(szTmp,
"%s\n",szStr);
                    if (ErrorNum() != INV_ERROR_CODE)
                              j += wsprintf(szTmp+j,
"Error = %d\n", ErrorNum());
                    if (m_szLoc)
                              j += wsprintf(szTmp+j,
"Location = %s\n", GetLocation());

                    j += wsprintf(szTmp+j, "%s\n",
ErrorText());

                    ::MessageBox(hwnd, szTmp,
m_szApp, MB_OK);
          }

          char *GetApp(void) { return m_szApp; }
          char *GetLocation(void) { return m_szLoc; }
          virtual int ErrorNum() { return m_idMsg; }



          virtual int ErrorType() = 0;  // a value
which distinguishes the kind of error that occurred
          virtual char *ErrorText() = 0; // a string
(i.e., human readable) representation of the error


protected:
          char      *m_szApp;
          char      *m_szLoc; // code location where
the error occurred
          int                 m_idMsg;
```


©2005 Hewlett-Packard Company. All rights reserved.

```
	//short	m_errType;
};

class CSocketErr : public CBaseErr
{
public:
	enum Action
	{
		eNone = 0,
		eSend,
		eSocket,
		eBind,
		eConnect,
		eListen,
		eHost,
		eRecv,
		eGetHostByName,
		eWSACreateEvent,
		eWSASend,
		eWSASendImage,
		eWSAGetOverlappedResult,
		eWSARecv,
		eWSARecvImage,
		eWSAWaitForMultipleEvents,
		eWSAStartup,
		eWSAResetEvent,
		eNonRetryable,
	};

	CSocketErr(Action eAction, LPCTSTR
szLocation = NULL);

	~CSocketErr()
	{
		if (m_szErrorText != NULL)
			delete []
m_szErrorText;
	};

	Action	m_eAction;
	char	*m_szErrorText;

	int ErrorType() { return ERR_TYPE_SOCKET;};
	char *ErrorText(void);

};

class CSystemErr : public CBaseErr
{
public:
	enum Action
	{
		eNone = 0,
		eTransactNamedPipe,
		eWaitNamedPipe,
		eSetNamedPipeHandleState,
		eCreateFile,
		eCreateProcess,
		eCallNamedPipe,
		eCreateEvent,
		eCreateThread,
		eVirtualAlloc,
		eReadFile = 10,
		eWriteFile,
		eMapViewOfFile,
		eCreateFileMapping,
		eInitializeSecurityDescriptor,
		eSetSecurityDescriptorDacl,
		eCreateNamedPipe,
		eConnectNamedPipe,
		eWaitForSingleObject,
		eRegOpenKeyEx,
		eRegQueryValueEx = 20,
		ebeginthread,
		eRegEnumValue,
		eRegSetValueEx,
		eRegCreateKeyEx,
		eWaitForMultipleObjects,
		eRegisterClassEx,
		eCreateWindow,
		eCreateSemaphore,
		eFSeek,
		eFRead,
		eFWrite,
		eTmpFile,
		eSetFilePointer,
		eNew,
	};

		CSystemErr(Action
eAction, LPCTSTR szLocation);
		CSystemErr(int iError,
Action eAction, LPCTSTR szLocation);
	int		ErrorType() { return
ERR_TYPE_OS;};
	char	*ErrorText(void);
	void	Draw(HWND hwnd, LPCTSTR szStr =
NULL);

	Action	m_eAction;

private:
	char m_szMsg[ERR_MSG_BUF_SIZE];
};

class CMemoryErr : public CBaseErr
{
public:
	CMemoryErr();

	int ErrorType() {return ERR_TYPE_MEMORY;}
	char *ErrorText() {return ERR_INS_MEMORY;}
};


class CBufferOverflowErr : public CBaseErr
{
	public:
	CBufferOverflowErr(int,LPTSTR);

	int ErrorType() {return ERR_BUF_OVERFLOW;}

	char *ErrorText() {return
ERR_INS_BUF_OVERFLOW;}
};
```

install.h

```
//{{NO_DEPENDENCIES}}
// Microsoft Developer Studio generated include file.
// Used by install.rc
//

#define IDD_DIALOG1                                 101
#define IDI_ICON1                                   102
#define IDR_TPCCDLL                                 103
#define IDD_DIALOG2                                 105
#define IDI_ICON2                                   106
#define IDR_DELIVERY                                107
#define IDD_DIALOG3                                 108

#define BN_LOG
          1001
#define ED_KEEP
          1002
#define ED_THREADS
          1003
#define ED_THREADS2
          1004
#define IDC_PATH
          1007
#define IDC_VERSION
          1009
#define IDC_RESULTS
          1010
#define IDC_PROGRESS1
          1011
#define IDC_STATUS
          1012
#define IDC_BUTTON1
          1013
#define ED_MAXCONNECTION
          1014
#define ED_IIS_MAX_THEAD_POOL_LIMIT
          1015
#define ED_WEB_SERVICE_BACKLOG_QUEUE_SIZE
          1017
#define ED_IIS_THREAD_TIMEOUT
          1018
#define ED_IIS_LISTEN_BACKLOG
          1019
#define IDC_DBLIB
          1021
#define IDC_ODBC
          1022
#define IDC_CONNECT_POOL
                    1023
#define ED_USER_CONNECT_DELAY_TIME
          1024

// Next default values for new objects
//
```


©2005 Hewlett-Packard Company. All rights reserved.

install.h

```
//{{NO_DEPENDENCIES}}
// Microsoft Developer Studio generated include file.
// Used by install.rc
//

#define IDD_DIALOG1                                 101
#define IDI_ICON1                                   102
#define IDR_TPCCDLL                                 103
#define IDD_DIALOG2                                 105
#define IDI_ICON2                                   106
#define IDR_DELIVERY                                107
#define IDD_DIALOG3                                 108

#define BN_LOG
          1001
#define ED_KEEP
          1002
#define ED_THREADS
          1003
#define ED_THREADS2
          1004
#define IDC_PATH
          1007
#define IDC_VERSION
          1009
#define IDC_RESULTS
          1010
#define IDC_PROGRESS1
          1011
#define IDC_STATUS
          1012
#define IDC_BUTTON1
          1013
#define ED_MAXCONNECTION
          1014
#define ED_IIS_MAX_THEAD_POOL_LIMIT
          1015
#define ED_WEB_SERVICE_BACKLOG_QUEUE_SIZE
          1017
#define ED_IIS_THREAD_TIMEOUT
          1018
#define ED_IIS_LISTEN_BACKLOG
          1019
#define IDC_DBLIB
          1021
#define IDC_ODBC
          1022
#define IDC_CONNECT_POOL
                    1023
#define ED_USER_CONNECT_DELAY_TIME
          1024

// Next default values for new objects
//
```

install.rc

```
//Microsoft Developer Studio generated resource
script.
//
#include "resource.h"

#define APSTUDIO_READONLY_SYMBOLS
/////////////////////////////////////////////////////
//////////////////////
//
// Generated from the TEXTINCLUDE 2 resource.
//
#include "afxres.h"

/////////////////////////////////////////////////////
//////////////////////
#undef APSTUDIO_READONLY_SYMBOLS

/////////////////////////////////////////////////////
//////////////////////
// English (U.S.) resources

#if !defined(AFX_RESOURCE_DLL) ||
defined(AFX_TARG_ENU)
#ifdef _WIN32
LANGUAGE LANG_ENGLISH, SUBLANG_ENGLISH_US
#pragma code_page(1252)
#endif //_WIN32

/////////////////////////////////////////////////////
//////////////////////
//
// Dialog
//

IDD_DIALOG1 DIALOGEX 0, 0, 219, 351
STYLE DS_MODALFRAME | DS_CENTER | WS_MINIMIZEBOX |
WS_POPUP | WS_CAPTION |
    WS_SYSMENU
CAPTION "TPC-C Web Client Installation Utility"
FONT 8, "MS Sans Serif"
BEGIN
    EDITTEXT        ED_THREADS,164,45,34,12,ES_RIGHT
| ES_NUMBER,
                    WS_EX_RTLREADING
    EDITTEXT
ED_MAXDELIVERIES,164,59,34,12,ES_RIGHT | ES_NUMBER,
                    WS_EX_RTLREADING
    EDITTEXT
ED_MAXCONNECTION,164,73,34,12,ES_RIGHT | ES_NUMBER,
                    WS_EX_RTLREADING
    CONTROL
"None",IDC_TM_NONE,"Button",BS_AUTORADIOBUTTON |
                    WS_GROUP |
WS_TABSTOP,43,100,33,10
    CONTROL
"COM",IDC_TM_MTS,"Button",BS_AUTORADIOBUTTON |
                    WS_TABSTOP,43,113,32,10
    CONTROL
"TUXEDO",IDC_TM_TUXEDO,"Button",BS_AUTORADIOBUTTON |
                    WS_TABSTOP,106,100,46,10
    CONTROL
"ENCINA",IDC_TM_ENCINA,"Button",BS_AUTORADIOBUTTON |
                    WS_DISABLED |
WS_TABSTOP,106,113,43,10
    EDITTEXT
ED_DB_SERVER,131,152,67,12,ES_AUTOHSCROLL
    EDITTEXT
ED_DB_USER_ID,131,165,67,12,ES_AUTOHSCROLL
    EDITTEXT
ED_DB_PASSWORD,131,178,67,12,ES_AUTOHSCROLL
    EDITTEXT
ED_DB_NAME,131,191,67,12,ES_AUTOHSCROLL
    CONTROL
"DBLIB",IDC_DBLIB,"Button",BS_AUTORADIOBUTTON |
WS_GROUP |
                    WS_TABSTOP,45,219,39,12
    CONTROL
"ODBC",IDC_ODBC,"Button",BS_AUTORADIOBUTTON |
WS_TABSTOP,
                    91,219,39,12
    EDITTEXT
ED_IIS_MAX_THEAD_POOL_LIMIT,164,263,34,12,ES_RIGHT |
                    ES_NUMBER,WS_EX_RTLREADING
    EDITTEXT
ED_WEB_SERVICE_BACKLOG_QUEUE_SIZE,164,277,34,12,ES_RI
GHT |
                    ES_NUMBER,WS_EX_RTLREADING
    EDITTEXT
ED_IIS_THREAD_TIMEOUT,164,291,34,12,ES_RIGHT |
ES_NUMBER,
                    WS_EX_RTLREADING
    EDITTEXT
ED_IIS_LISTEN_BACKLOG,164,305,34,12,ES_RIGHT |
ES_NUMBER,
                    WS_EX_RTLREADING
    DEFPUSHBUTTON   "OK",IDOK,53,331,50,14
    PUSHBUTTON      "Cancel",IDCANCEL,119,331,50,14
    EDITTEXT
IDC_PATH,106,26,91,13,ES_AUTOHSCROLL | ES_READONLY
    LTEXT           "Number of Delivery
Threads:",IDC_STATIC,35,45,115,12
    LTEXT           "Max Number of
Connections:",IDC_STATIC,35,73,115,12
    RTEXT           "Version
4.11",IDC_VERSION,120,4,89,9
    LTEXT           "IIS Max Thread Pool
Limit:",IDC_STATIC,36,263,115,12
    LTEXT           "Web Service Backlog Queue
Size:",IDC_STATIC,36,277,115,
                    12
    LTEXT           "IIS Thread Timeout
(seconds):",IDC_STATIC,36,291,115,12
    LTEXT           "IIS Listen
Backlog:",IDC_STATIC,36,307,115,10
    GROUPBOX        "Database
Interface",IDC_STATIC,35,208,163,27,WS_GROUP
    LTEXT           "Installation
directory:",IDC_STATIC,35,29,71,10
    GROUPBOX        "Transaction
Monitor",IDC_STATIC,33,90,165,37
    LTEXT           "Server
Name:",IDC_STATIC,35,155,56,8
```


©2005 Hewlett-Packard Company. All rights reserved.

```
    LTEXT           "User ID:",IDC_STATIC,35,168,60,8
    LTEXT           "User
Password:",IDC_STATIC,35,181,83,8
    LTEXT           "Database
Name:",IDC_STATIC,35,194,54,8
    GROUPBOX        "SQL Server Connection
Properties",IDC_STATIC,22,139,187,
                    102
    GROUPBOX        "Web Client
Properties",IDC_STATIC,22,15,187,118
    GROUPBOX        "IIS
Settings",IDC_STATIC,22,247,187,79
    LTEXT           "Max Pending
Deliveries:",IDC_STATIC,35,59,115,12
END

IDD_DIALOG2 DIALOGEX 0, 0, 117, 62
STYLE DS_SETFOREGROUND | DS_3DLOOK | DS_CENTER |
WS_POPUP | WS_BORDER
EXSTYLE WS_EX_STATICEDGE
FONT 12, "MS Sans Serif", 0, 0, 0x1
BEGIN
    DEFPUSHBUTTON   "OK",IDOK,33,45,50,9
    CTEXT           "HTML TPC-C Installation
Successfull",IDC_RESULTS,7,22,
                    102,18,0,WS_EX_CLIENTEDGE
    ICON
IDI_ICON2,IDC_STATIC,50,7,18,20,SS_REALSIZEIMAGE,
                    WS_EX_TRANSPARENT
END

IDD_DIALOG3 DIALOG DISCARDABLE  0, 0, 91, 40
STYLE DS_SYSMODAL | DS_MODALFRAME | DS_3DLOOK |
DS_CENTER | WS_CAPTION
CAPTION "Installing TPC-C Web Client"
FONT 12, "Arial Black"
BEGIN
    CONTROL
"Progress1",IDC_PROGRESS1,"msctls_progress32",WS_BORD
ER,
                    7,20,77,13
    CTEXT
"Static",IDC_STATUS,7,7,77,12,SS_SUNKEN
END

IDD_DIALOG4 DIALOG DISCARDABLE  0, 0, 291, 202
STYLE DS_MODALFRAME | DS_CENTER | WS_POPUP |
WS_CAPTION | WS_SYSMENU
CAPTION "Client End User License"
FONT 8, "MS Sans Serif"
BEGIN
    EDITTEXT
IDC_LICENSE,7,7,271,167,ES_MULTILINE | ES_AUTOVSCROLL
|
                    ES_AUTOHSCROLL | ES_READONLY |
WS_VSCROLL | WS_HSCROLL
    DEFPUSHBUTTON   "I &Agree",IDOK,87,181,50,14
    PUSHBUTTON      "&Cancel",IDCANCEL,153,181,50,14
END


/////////////////////////////////////////////////////
///////////////////////
//
// DESIGNINFO
//

#ifdef APSTUDIO_INVOKED
GUIDELINES DESIGNINFO DISCARDABLE
BEGIN
    IDD_DIALOG1, DIALOG
    BEGIN
        LEFTMARGIN, 22
        RIGHTMARGIN, 209
        VERTGUIDE, 35
        VERTGUIDE, 198
        TOPMARGIN, 4
        BOTTOMMARGIN, 345
    END

    IDD_DIALOG2, DIALOG
    BEGIN
        LEFTMARGIN, 7
        RIGHTMARGIN, 109
        TOPMARGIN, 7
        BOTTOMMARGIN, 54
    END

    IDD_DIALOG3, DIALOG
    BEGIN
        LEFTMARGIN, 7
        RIGHTMARGIN, 84
        TOPMARGIN, 7
        BOTTOMMARGIN, 33
    END

    IDD_DIALOG4, DIALOG
    BEGIN
        LEFTMARGIN, 7
        RIGHTMARGIN, 278
        TOPMARGIN, 7
        BOTTOMMARGIN, 195
    END
END
#endif    // APSTUDIO_INVOKED


#ifdef APSTUDIO_INVOKED
/////////////////////////////////////////////////////
///////////////////////
//
// TEXTINCLUDE
//

1 TEXTINCLUDE DISCARDABLE
BEGIN
    "resource.h\0"
END

2 TEXTINCLUDE DISCARDABLE
BEGIN
    "#include ""afxres.h""\r\n"
    "\0"
END

3 TEXTINCLUDE DISCARDABLE
BEGIN
    "\r\n"
    "\0"
END

#endif    // APSTUDIO_INVOKED


/////////////////////////////////////////////////////
///////////////////////
//
// Icon
//

// Icon with lowest ID value placed first to ensure
application icon
// remains consistent on all systems.
IDI_ICON1               ICON    DISCARDABLE
"icon1.ico"
IDI_ICON2               ICON    DISCARDABLE
"icon2.ico"

/////////////////////////////////////////////////////
///////////////////////
//
// TPCCDLL
//

IDR_TPCCDLL             TPCCDLL DISCARDABLE
"..\\..\\isapi_dll\\bin\\tpcc.dll"

#ifndef _MAC
/////////////////////////////////////////////////////
///////////////////////
//
// Version
//

VS_VERSION_INFO VERSIONINFO
 FILEVERSION 0,4,20,0
 PRODUCTVERSION 0,4,20,0
 FILEFLAGSMASK 0x3fL
#ifdef _DEBUG
 FILEFLAGS 0x1L
#else
 FILEFLAGS 0x0L
#endif
 FILEOS 0x40004L
 FILETYPE 0x1L
 FILESUBTYPE 0x0L
BEGIN
    BLOCK "StringFileInfo"
    BEGIN
        BLOCK "040904b0"
        BEGIN
            VALUE "Comments", "TPC-C Web Client
Installer\0"
            VALUE "CompanyName", "Microsoft\0"
            VALUE "FileDescription", "install\0"
            VALUE "FileVersion", "0, 4, 20, 0\0"
            VALUE "InternalName", "install\0"
            VALUE "LegalCopyright", "Copyright ©
1999\0"
```


©2005 Hewlett-Packard Company. All rights reserved.

```
            VALUE "OriginalFilename", "install.exe\0"
            VALUE "ProductName", "Microsoft
install\0"
            VALUE "ProductVersion", "0, 4, 20, 0\0"
        END
    END
    BLOCK "VarFileInfo"
    BEGIN
        VALUE "Translation", 0x409, 1200
    END
END

#endif    // !_MAC


/////////////////////////////////////////////////////
///////////////////////
//
// LICENSE
//

IDR_LICENSE1            LICENSE DISCARDABLE
"license.txt"

/////////////////////////////////////////////////////
///////////////////////
//
// DBLIB_DLL
//

IDR_DBLIB_DLL           DBLIB_DLL DISCARDABLE
"..\\..\\db_dblib_dll\\bin\\tpcc_dblib.dll"

/////////////////////////////////////////////////////
///////////////////////
//
// ODBC_DLL
//

IDR_ODBC_DLL            ODBC_DLL DISCARDABLE
"..\\..\\db_odbc_dll\\bin\\tpcc_odbc.dll"

/////////////////////////////////////////////////////
///////////////////////
//
// TUXEDO_APP
//

IDR_TUXEDO_APP          TUXEDO_APP DISCARDABLE
"..\\..\\tuxapp\\bin\\tuxapp.exe"

/////////////////////////////////////////////////////
///////////////////////
//
// TUXEDO_DLL
//

IDR_TUXEDO_DLL          TUXEDO_DLL DISCARDABLE
"..\\..\\tm_tuxedo_dll\\bin\\tpcc_tuxedo.dll"

/////////////////////////////////////////////////////
///////////////////////
//
// COM_DLL
//

IDR_COM_DLL             COM_DLL DISCARDABLE
"..\\..\\tm_com_dll\\bin\\tpcc_com.dll"

/////////////////////////////////////////////////////
///////////////////////
//
// COM_PS_DLL
//

IDR_COMPS_DLL           COM_PS_DLL DISCARDABLE
"..\\..\\tpcc_com_ps\\bin\\tpcc_com_ps.dll"

/////////////////////////////////////////////////////
///////////////////////
//
// COM_ALL_DLL
//

IDR_COMALL_DLL          COM_ALL_DLL DISCARDABLE
"..\\..\\tpcc_com_all\\bin\\tpcc_com_all.dll"

/////////////////////////////////////////////////////
///////////////////////
//
// COM_TYPLIB
//

IDR_COMTYPLIB_DLL       COM_TYPLIB DISCARDABLE
"..\\..\\tpcc_com_all\\src\\tpcc_com_all.tlb"

#endif    // English (U.S.) resources
/////////////////////////////////////////////////////
///////////////////////



#ifndef APSTUDIO_INVOKED
/////////////////////////////////////////////////////
///////////////////////
//
// Generated from the TEXTINCLUDE 3 resource.
//


/////////////////////////////////////////////////////
///////////////////////
#endif    // not APSTUDIO_INVOKED
```

install_com.cpp

```
/*        FILE:               INSTALL_COM.CPP
 *                                    Microsoft
TPC-C Kit Ver. 4.20.000
 *                                    Copyright
Microsoft, 1999
 *              All Rights Reserved
 *
 *                                        not audited
 *
 *        PURPOSE:  installation code for COM
application for TPC-C Web Kit
 *        Contact:  Charles Levine
(clevine@microsoft.com)
 *
 *  Change history:
 *                  4.20.000 - first version
 */

#define _WIN32_WINNT 0x0500

#include <comdef.h>
#include <comadmin.h>
#include <stdio.h>
#include <tchar.h>

extern "C"
{
          BOOL install_com(char *szDllPath);
}

BOOL install_com(char *szDllPath)
{
          ICOMAdminCatalog*   pCOMAdminCat = NULL;
          ICatalogCollection* pCatalogCollectionApp
= NULL;
          ICatalogCollection* pCatalogCollectionCo
= NULL;
          ICatalogCollection* pCatalogCollectionItf
= NULL;
          ICatalogCollection*
          pCatalogCollectionMethod = NULL;

          ICatalogObject*
          pCatalogObjectApp    = NULL;
          ICatalogObject*
          pCatalogObjectCo     = NULL;
          ICatalogObject*
          pCatalogObjectItf    = NULL;
          ICatalogObject*
          pCatalogObjectMethod = NULL;

          _bstr_t
          bstrTemp, bstrTemp2, bstrTemp3, bstrTemp4;
          _bstr_t
          bstrDllPath = szDllPath;
          _variant_t
          vTmp, vKey;
          long
          lActProp, lCount, lCountCo, lCountItf,
lCountMethod;
          bool
          bTmp;


          CoInitializeEx(NULL, COINIT_MULTITHREADED);

          HRESULT hr =
CoCreateInstance(CLSID_COMAdminCatalog,
```


©2005 Hewlett-Packard Company. All rights reserved.

```
                                        NULL,

          CLSCTX_INPROC_SERVER,


          IID_ICOMAdminCatalog,

                                        (void**)
&pCOMAdminCat);

          if (!SUCCEEDED(hr)) goto Error;

          bstrTemp = "Applications";

          // Attempt to connect to "Applications" in
the Catalog
          hr = pCOMAdminCat->GetCollection(bstrTemp,

                                        (IDispatch**)
&pCatalogCollectionApp);
          if (!SUCCEEDED(hr)) goto Error;

          // Attempt to load the "Applications"
collection
          hr = pCatalogCollectionApp->Populate();
          if (!SUCCEEDED(hr)) goto Error;

          hr = pCatalogCollectionApp-
>get_Count(&lCount);
          if (!SUCCEEDED(hr)) goto Error;

          // iterate through applications to delete
existing "TPC-C" application (if any)
          while (lCount > 0)
          {
                    hr = pCatalogCollectionApp-
>get_Item(lCount - 1, (IDispatch**)
&pCatalogObjectApp);
                    if (!SUCCEEDED(hr)) goto Error;

                    hr = pCatalogObjectApp-
>get_Name(&vTmp);
                    if (!SUCCEEDED(hr)) goto Error;

                    if (wcscmp(vTmp.bstrVal, L"TPC-
C"))
                    {
                              lCount--;
                              continue;
                    }
                    else
                    {
                              hr =
pCatalogCollectionApp->Remove(lCount - 1);
                              if (!SUCCEEDED(hr))
goto Error;
                              break;
                    }
          }
```

```
          hr = pCatalogCollectionApp-
>SaveChanges(&lActProp);
          if (!SUCCEEDED(hr)) goto Error;

          // add the new application
          hr = pCatalogCollectionApp-
>Add((IDispatch**) &pCatalogObjectApp);
          if (!SUCCEEDED(hr)) goto Error;

          // set properties
          bstrTemp = "Name";
          vTmp = "TPC-C";
          hr = pCatalogObjectApp->put_Value(bstrTemp,
vTmp);
          if (!SUCCEEDED(hr)) goto Error;

          // set as a library (in process)
application
          bstrTemp = "Activation";
          lActProp = COMAdminActivationInproc;
          vTmp = lActProp;
          hr = pCatalogObjectApp->put_Value(bstrTemp,
vTmp);
          if (!SUCCEEDED(hr)) goto Error;

          // set security level to process
          bstrTemp = "AccessChecksLevel";
          lActProp =
COMAdminAccessChecksApplicationLevel;
          vTmp = lActProp;
          hr = pCatalogObjectApp->put_Value(bstrTemp,
vTmp);
          if (!SUCCEEDED(hr)) goto Error;

          // save key to get the Components
collection later
          hr = pCatalogObjectApp->get_Key(&vKey);
          if (!SUCCEEDED(hr)) goto Error;

          // save changes (app creation) so component
installation will work
          hr = pCatalogCollectionApp-
>SaveChanges(&lActProp);
          if (!SUCCEEDED(hr)) goto Error;

          pCatalogObjectApp->Release();
          pCatalogObjectApp = NULL;

          bstrTemp  = "TPC-C";
                    // app name
          bstrTemp2 =         bstrDllPath +
"tpcc_com_all.dll";           // DLL
          bstrTemp3 =         bstrDllPath +
"tpcc_com_all.tlb";           // type library (TLB)
          bstrTemp4 =         bstrDllPath +
"tpcc_com_ps.dll";            // proxy/stub dll

          hr = pCOMAdminCat-
>InstallComponent(bstrTemp,


          bstrTemp2,
```

```
          bstrTemp3,


          bstrTemp4);
          if (!SUCCEEDED(hr)) goto Error;


          bstrTemp = "Components";
          hr = pCatalogCollectionApp-
>GetCollection(bstrTemp, vKey, (IDispatch**)
&pCatalogCollectionCo);
          if (!SUCCEEDED(hr)) goto Error;

          hr = pCatalogCollectionCo->Populate();
          if (!SUCCEEDED(hr)) goto Error;

          hr = pCatalogCollectionCo-
>get_Count(&lCountCo);
          if (!SUCCEEDED(hr)) goto Error;

          // iterate through components in
application and set the properties
          while (lCountCo > 0)
          {
                    hr = pCatalogCollectionCo-
>get_Item(lCountCo - 1, (IDispatch**)
&pCatalogObjectCo);
                    if (!SUCCEEDED(hr)) goto Error;

                    // used for debugging (view the
name)
                    hr = pCatalogObjectCo-
>get_Name(&vTmp);
                    if (!SUCCEEDED(hr)) goto Error;

                    bstrTemp = "ConstructionEnabled";
                    bTmp = TRUE;
                    vTmp = bTmp;
                    hr = pCatalogObjectCo-
>put_Value(bstrTemp, vTmp);
                    if (!SUCCEEDED(hr)) goto Error;

                    bstrTemp = "ConstructorString";
                    bstrTemp2 = "dummy string (do not
remove)";
                    vTmp = bstrTemp2;
                    hr = pCatalogObjectCo-
>put_Value(bstrTemp, vTmp);
                    if (!SUCCEEDED(hr)) goto Error;

                    bstrTemp =
"JustInTimeActivation";
                    bTmp = TRUE;
                    vTmp = bTmp;
                    hr = pCatalogObjectCo-
>put_Value(bstrTemp, vTmp);
                    if (!SUCCEEDED(hr)) goto Error;

                    bstrTemp = "MaxPoolSize";
```


©2005 Hewlett-Packard Company. All rights reserved.

```
                    vTmp.Clear();       // clear
variant so it isn't stored as a bool (_variant_t
feature)
                    vTmp = (long)30;
                    hr = pCatalogObjectCo-
>put_Value(bstrTemp, vTmp);
                    if (!SUCCEEDED(hr)) goto Error;

                    bstrTemp =
"ObjectPoolingEnabled";
                    bTmp = TRUE;
                    vTmp = bTmp;
                    hr = pCatalogObjectCo-
>put_Value(bstrTemp, vTmp);
                    if (!SUCCEEDED(hr)) goto Error;



                    // save key to get the
InterfacesForComponent collection
                    hr = pCatalogObjectCo-
>get_Key(&vKey);
                    if (!SUCCEEDED(hr)) goto Error;

                    bstrTemp =
"InterfacesForComponent";
                    hr = pCatalogCollectionCo-
>GetCollection(bstrTemp, vKey, (IDispatch**)
&pCatalogCollectionItf);
                    if (!SUCCEEDED(hr)) goto Error;

                    hr = pCatalogCollectionItf-
>Populate();
                    if (!SUCCEEDED(hr)) goto Error;

                    hr = pCatalogCollectionItf-
>get_Count(&lCountItf);
                    if (!SUCCEEDED(hr)) goto Error;

                    // iterate through interfaces in
component
                    while (lCountItf > 0)
                    {
                              hr =
pCatalogCollectionItf->get_Item(lCountItf - 1,
(IDispatch**) &pCatalogObjectItf);
                              if (!SUCCEEDED(hr))
goto Error;

                              // save key to get the
MethodsForInterface collection
                              hr = pCatalogObjectItf-
>get_Key(&vKey);
                              if (!SUCCEEDED(hr))
goto Error;

                              bstrTemp =
"MethodsForInterface";
                              hr =
pCatalogCollectionItf->GetCollection(bstrTemp, vKey,
(IDispatch**) &pCatalogCollectionMethod);
                              if (!SUCCEEDED(hr))
goto Error;

                              hr =
pCatalogCollectionMethod->Populate();
                              if (!SUCCEEDED(hr))
goto Error;

                              hr =
pCatalogCollectionMethod->get_Count(&lCountMethod);
                              if (!SUCCEEDED(hr))
goto Error;

                              // iterate through
methods of interface
                              while (lCountMethod >
0)
                              {
                                        hr =
pCatalogCollectionMethod->get_Item(lCountMethod - 1,
(IDispatch**) &pCatalogObjectMethod);
                                        if
(!SUCCEEDED(hr)) goto Error;

                                        bstrTemp =
"AutoComplete";
                                        bTmp = TRUE;
                                        vTmp = bTmp;
                                        hr =
pCatalogObjectMethod->put_Value(bstrTemp, vTmp);
                                        if
(!SUCCEEDED(hr)) goto Error;


          pCatalogObjectMethod->Release();

          pCatalogObjectMethod = NULL;

                                        lCountMethod-
-;
                              }

                              // save changes
                              hr =
pCatalogCollectionMethod->SaveChanges(&lActProp);
                              if (!SUCCEEDED(hr))
goto Error;

                              pCatalogObjectItf-
>Release();
                              pCatalogObjectItf =
NULL;

                              lCountItf--;

                    }


                    pCatalogObjectCo->Release();
                    pCatalogObjectCo = NULL;

                    lCountCo--;
          }

          // save changes
          hr = pCatalogCollectionCo-
>SaveChanges(&lActProp);
          if (!SUCCEEDED(hr)) goto Error;

          pCatalogCollectionApp->Release();
          pCatalogCollectionApp = NULL;

          pCatalogCollectionCo->Release();
          pCatalogCollectionCo = NULL;

          pCatalogCollectionItf->Release();
          pCatalogCollectionItf = NULL;

          pCatalogCollectionMethod->Release();
          pCatalogCollectionMethod = NULL;


Error:
          CoUninitialize();

          if (!SUCCEEDED(hr))
          {
                    LPTSTR lpBuf;
                    DWORD dwRes =
FormatMessage(FORMAT_MESSAGE_ALLOCATE_BUFFER |
FORMAT_MESSAGE_FROM_SYSTEM,

                                        NULL,

                                        hr,


          MAKELANGID(LANG_NEUTRAL, SUBLANG_DEFAULT),

                                        (LPTSTR)
&lpBuf,

                                        0,

                                        NULL);
//                  _tprintf(__T("Error adding
components.  HRESULT: 0x%x\n%s"), hr, lpBuf);
                    return TRUE;
          }
          else
                    return FALSE;
}
```

isapi_dll.dsp

```
# Microsoft Developer Studio Project File -
Name="isapi_dll" - Package Owner=<4>
# Microsoft Developer Studio Generated Build File,
Format Version 6.00
# ** DO NOT EDIT **

# TARGTYPE "Win32 (x86) Dynamic-Link Library" 0x0102

CFG=isapi_dll - Win32 IceCAP
```


©2005 Hewlett-Packard Company. All rights reserved.

```
!MESSAGE This is not a valid makefile. To build this
project using NMAKE,
!MESSAGE use the Export Makefile command and run
!MESSAGE
!MESSAGE NMAKE /f "isapi_dll.mak".
!MESSAGE
!MESSAGE You can specify a configuration when running
NMAKE
!MESSAGE by defining the macro CFG on the command
line. For example:
!MESSAGE
!MESSAGE NMAKE /f "isapi_dll.mak" CFG="isapi_dll -
Win32 IceCAP"
!MESSAGE
!MESSAGE Possible choices for configuration are:
!MESSAGE
!MESSAGE "isapi_dll - Win32 Release" (based on "Win32
(x86) Dynamic-Link Library")
!MESSAGE "isapi_dll - Win32 Debug" (based on "Win32
(x86) Dynamic-Link Library")
!MESSAGE "isapi_dll - Win32 IceCAP" (based on "Win32
(x86) Dynamic-Link Library")
!MESSAGE

# Begin Project
# PROP AllowPerConfigDependencies 0
# PROP Scc_ProjName ""
# PROP Scc_LocalPath ""
CPP=cl.exe
MTL=midl.exe
RSC=rc.exe

!IF  "$(CFG)" == "isapi_dll - Win32 Release"

# PROP BASE Use_MFC 0
# PROP BASE Use_Debug_Libraries 0
# PROP BASE Output_Dir "Release"
# PROP BASE Intermediate_Dir "Release"
# PROP BASE Target_Dir ""
# PROP Use_MFC 0
# PROP Use_Debug_Libraries 0
# PROP Output_Dir ".\bin"
# PROP Intermediate_Dir ".\obj"
# PROP Ignore_Export_Lib 0
# PROP Target_Dir ""
# ADD BASE CPP /nologo /MT /W3 /GX /O2 /D "WIN32" /D
"NDEBUG" /D "_WINDOWS" /YX /FD /c
# ADD CPP /nologo /MD /W3 /GX /O2 /D "NDEBUG" /D
"WIN32" /D "_WINDOWS" /YX /FD /c
# ADD BASE MTL /nologo /D "NDEBUG" /mktyplib203 /o
"NUL" /win32
# ADD MTL /nologo /D "NDEBUG" /mktyplib203 /o "NUL"
/win32
# ADD BASE RSC /l 0x409 /d "NDEBUG"
# ADD RSC /l 0x409 /d "NDEBUG"
BSC32=bscmake.exe
# ADD BASE BSC32 /nologo
# ADD BSC32 /nologo
LINK32=link.exe
# ADD BASE LINK32 kernel32.lib user32.lib gdi32.lib
winspool.lib comdlg32.lib advapi32.lib shell32.lib
ole32.lib oleaut32.lib uuid.lib odbc32.lib
odbccp32.lib /nologo /subsystem:windows /dll
/machine:I386
# ADD LINK32 ..\common\txnlog\lib\release\rtetime.lib
..\common\txnlog\lib\release\spinlock.lib
..\common\txnlog\lib\release\error.lib
..\common\txnlog\lib\release\txnlog.lib wsock32.lib
kernel32.lib user32.lib gdi32.lib winspool.lib
comdlg32.lib advapi32.lib shell32.lib ole32.lib
oleaut32.lib uuid.lib odbc32.lib odbccp32.lib /nologo
/subsystem:windows /dll /machine:I386
/nodefaultlib:"LIBCMT" /out:".\bin/tpcc.dll"
# SUBTRACT LINK32 /nodefaultlib

!ELSEIF  "$(CFG)" == "isapi_dll - Win32 Debug"

# PROP BASE Use_MFC 0
# PROP BASE Use_Debug_Libraries 1
# PROP BASE Output_Dir "Debug"
# PROP BASE Intermediate_Dir "Debug"
# PROP BASE Target_Dir ""
# PROP Use_MFC 0
# PROP Use_Debug_Libraries 1
# PROP Output_Dir ".\bin"
# PROP Intermediate_Dir ".\obj"
# PROP Ignore_Export_Lib 0
# PROP Target_Dir ""
# ADD BASE CPP /nologo /MTd /W3 /Gm /GX /Zi /Od /D
"WIN32" /D "_DEBUG" /D "_WINDOWS" /YX /FD /c
# ADD CPP /nologo /MDd /W3 /GX /ZI /Od /D "_DEBUG" /D
"WIN32" /D "_WINDOWS" /FR /YX /FD /c
# ADD BASE MTL /nologo /D "_DEBUG" /mktyplib203 /o
"NUL" /win32
# ADD MTL /nologo /D "_DEBUG" /mktyplib203 /o "NUL"
/win32
# ADD BASE RSC /l 0x409 /d "_DEBUG"
# ADD RSC /l 0x409 /d "_DEBUG"
BSC32=bscmake.exe
# ADD BASE BSC32 /nologo
# ADD BSC32 /nologo
LINK32=link.exe
# ADD BASE LINK32 kernel32.lib user32.lib gdi32.lib
winspool.lib comdlg32.lib advapi32.lib shell32.lib
ole32.lib oleaut32.lib uuid.lib odbc32.lib
odbccp32.lib /nologo /subsystem:windows /dll /debug
/machine:I386 /pdbtype:sept
# ADD LINK32 ..\common\txnlog\lib\debug\rtetime.lib
..\common\txnlog\lib\debug\spinlock.lib
..\common\txnlog\lib\debug\error.lib
..\common\txnlog\lib\debug\txnlog.lib wsock32.lib
kernel32.lib user32.lib gdi32.lib winspool.lib
comdlg32.lib advapi32.lib shell32.lib ole32.lib
oleaut32.lib uuid.lib odbc32.lib odbccp32.lib /nologo
/subsystem:windows /dll /debug /machine:I386
/nodefaultlib:"LIBCMTD" /out:".\bin/tpcc.dll"
/pdbtype:sept
# SUBTRACT LINK32 /profile /pdb:none /nodefaultlib

!ELSEIF  "$(CFG)" == "isapi_dll - Win32 IceCAP"

# PROP BASE Use_MFC 0
# PROP BASE Use_Debug_Libraries 1
# PROP BASE Output_Dir "isapi_dl"
# PROP BASE Intermediate_Dir "isapi_dl"
# PROP BASE Ignore_Export_Lib 0
# PROP BASE Target_Dir ""
# PROP Use_MFC 0
# PROP Use_Debug_Libraries 1
# PROP Output_Dir ".\bin"
# PROP Intermediate_Dir ".\obj"
# PROP Ignore_Export_Lib 0
# PROP Target_Dir ""
# ADD BASE CPP /nologo /MDd /W3 /GX /Zi /Od /D
"_DEBUG" /D "WIN32" /D "_WINDOWS" /FR /YX /FD /Gh /c
# ADD CPP /nologo /MD /W3 /GX /Zi /O2 /D "NDEBUG" /D
"ICECAP" /D "WIN32" /D "_WINDOWS" /FR /YX /FD /Gh /c
# ADD BASE MTL /nologo /D "_DEBUG" /mktyplib203 /o
"NUL" /win32
# ADD MTL /nologo /D "_DEBUG" /mktyplib203 /o "NUL"
/win32
# ADD BASE RSC /l 0x409 /d "_DEBUG"
# ADD RSC /l 0x409 /d "_DEBUG"
BSC32=bscmake.exe
# ADD BASE BSC32 /nologo
# ADD BSC32 /nologo
LINK32=link.exe
# ADD BASE LINK32 kernel32.lib user32.lib gdi32.lib
winspool.lib comdlg32.lib advapi32.lib shell32.lib
ole32.lib oleaut32.lib uuid.lib odbc32.lib
odbccp32.lib /nologo /subsystem:windows /dll /debug
/machine:I386 /out:".\bin/tpcc.dll" /pdbtype:sept
# SUBTRACT BASE LINK32 /profile /pdb:none
# ADD LINK32 icap.lib
..\common\txnlog\lib\release\rtetime.lib
..\common\txnlog\lib\release\spinlock.lib
..\common\txnlog\lib\release\error.lib
..\common\txnlog\lib\release\txnlog.lib wsock32.lib
kernel32.lib user32.lib gdi32.lib winspool.lib
comdlg32.lib advapi32.lib shell32.lib ole32.lib
oleaut32.lib uuid.lib odbc32.lib odbccp32.lib /nologo
/subsystem:windows /dll /debug /machine:I386
/out:".\bin/tpcc.dll" /pdbtype:sept
# SUBTRACT LINK32 /profile /pdb:none /map

!ENDIF

# Begin Target

# Name "isapi_dll - Win32 Release"
# Name "isapi_dll - Win32 Debug"
# Name "isapi_dll - Win32 IceCAP"
# Begin Group "Source"

# PROP Default_Filter "*.cpp, *.def, *.rc"
# Begin Source File

SOURCE=.\src\tpcc.cpp
# End Source File
# Begin Source File

SOURCE=.\src\tpcc.def
# End Source File
# Begin Source File

SOURCE=.\src\tpcc.rc
# End Source File
# End Group
```


©2005 Hewlett-Packard Company. All rights reserved.

```
# Begin Group "Header Files"

# PROP Default_Filter "*.h, *.hpp"
# Begin Source File

SOURCE=..\common\src\error.h
# End Source File
# Begin Source File

SOURCE=..\common\src\ReadRegistry.h
# End Source File
# Begin Source File

SOURCE=.\src\tpcc.h
# End Source File
# Begin Source File

SOURCE=..\db_dblib_dll\src\tpcc_dblib.h
# End Source File
# Begin Source File

SOURCE=..\db_odbc_dll\src\tpcc_odbc.h
# End Source File
# Begin Source File

SOURCE=..\tm_tuxedo_dll\src\tpcc_tux.h
# End Source File
# Begin Source File

SOURCE=..\common\src\trans.h
# End Source File
# Begin Source File

SOURCE=..\common\src\txn_base.h
# End Source File
# End Group
# End Target
# End Project
```

rtetime.h

```
/* FILE: rtetime.h : header file
 * Copyright 1997 Microsoft Corp., All rights
reserved.
 *
 * Source code licensed to Tandem Computers  for
Internal
 * use only.  Redistribution of source or object
files or
 * any derivative works is prohibited. By agreement,
this
 * notice may not be removed.
 *
 * Authors: Charles Levine, Philip Durr
 *                           Microsoft Corp.
 *
 */

//FILE: RTETIME.H

#define   MAX_JULIAN_TIME
          0x7FFFFFFFFFFFFFFF
#define JULIAN_TIME __int64
#define   TC_TIME              DWORD
extern "C"
{
BOOL                InitJulianTime(LPSYSTEMTIME
lpInitTime);
JULIAN_TIME         GetJulianTime(void);
DWORD               MyTickCount(void);
void                GetJulianAndTC(JULIAN_TIME
*pJulian, DWORD *pTC);
JULIAN_TIME         ConvertTo64BitTime(int iYear, int
iMonth, int iDay, int iHour, int iMinute, int
iSecond);
JULIAN_TIME         Get64BitTime(LPSYSTEMTIME
lpInitTime);
int                           JulianDay( int yr, int
mm, int dd );
void                JulianToTime(JULIAN_TIME
julianTS, int* yr, int* mm, int* dd, int *hh, int
*mi, int *ss );
void                JulianToCalendar( int day, int*
yr, int* mm, int* dd );
}
```

spinlock.h

```
/*        FILE: SPINLOCK.H
 *
 * Copyright 1997 Microsoft Corp., All rights
reserved.
 *
 * Source code licensed to Tandem Computers  for
Internal
 * use only.  Redistribution of source or object
files or
 * any derivative works is prohibited. By agreement,
this
 * notice may not be removed.
 *
 * Authors: Mike Parkes, Charles Levine, Philip Durr
 *                           Microsoft Corp.
 */

#ifndef _INC_Spinlock

          const LONG LockClosed         = 1;
          const LONG LockOpen           = 0;

          /*****************************************
********************
           *
           *   Spinlock and Semaphore locking.
           *
           *   This class provides a very
conservative locking scheme.
           *   The assumption behind the code is that
locks will be
           *   held for a very short time.  When a
lock is taken a memory
           *   location is exchanged.  All other
threads that want this
           *   lock wait by spinning and sometimes
sleeping on a semaphore
           *   until it becomes free again.  The only
other choice is not
           *   to wait at all and move on to do
something else.  This
           *   module should normally be used in
conjunction with cache
           *   aligned memory in minimize cache line
misses.
           *

*****************************************************
**********/

          class Spinlock
          {
                    // Private data.
                    HANDLE
Semaphore;
                    volatile LONG
m_Spinlock;
                    volatile LONG
Waiting;

                    #ifdef _DEBUG
                              // Counters for
debugging builds.
                              volatile LONG
          TotalLocks;
                              volatile LONG
          TotalSleeps;
                              volatile LONG
          TotalSpins;
                              volatile LONG
          TotalWaits;
                    #endif

                    public:
                              // Public functions.

                              Spinlock( void );

                              inline BOOL ClaimLock(
BOOL Wait = TRUE );
                              inline void
ReleaseLock( void );
                              ~Spinlock( void );
                              // Disabled operations.
                              Spinlock( const
Spinlock & Copy );
                              void operator=( const
Spinlock & Copy );

                    private:
                              // Private functions.
                              inline BOOL
ClaimSpinlock( volatile LONG *sl );
```


©2005 Hewlett-Packard Company. All rights reserved.

```
                                void WaitForLock( void
);
                                void WakeAllSleepers(
void );
          };

          /*****************************************
********************
           *
           *   A guaranteed atomic exchange.
           *
           *   An attempt is made to claim the
Spinlock.  This action is
           *   guaranteed to be atomic.
           *

*****************************************************
*********/

          inline BOOL Spinlock::ClaimSpinlock(
volatile LONG *Spinlock )
          {
                    #ifdef _DEBUG
                                InterlockedIncrement(
(LPLONG) & TotalLocks );
                    #endif
                    return ( ((*Spinlock) ==
LockOpen) && (InterlockedExchange( (LPLONG)Spinlock,
LockClosed ) == LockOpen) );
          }

          /*****************************************
*********
           *
           *   Claim the Spinlock.
           *
           *   Claim the lock if available else wait
or exit.
           *

*****************************************************/

          inline BOOL Spinlock::ClaimLock( BOOL Wait
)
          {
                    if ( ! ClaimSpinlock( (volatile
LONG*) & m_Spinlock ) )
                    {
                                if ( Wait )

          WaitForLock();
                                return Wait;
                    }
                    return TRUE;
          }

          /*****************************************
**************
           *
           *   Release the Spinlock.
           *
           *   Release the lock and if needed wakeup
any sleepers.
           *

*****************************************************
***/

          inline void Spinlock::ReleaseLock( void )
          {
                    m_Spinlock = LockOpen;
                    if ( Waiting > 0 )
                              WakeAllSleepers();
          }

          #define _INC_Spinlock

#endif
```

tm_com_dll.dsp

```
# Microsoft Developer Studio Project File -
Name="tm_com_dll" - Package Owner=<4>
# Microsoft Developer Studio Generated Build File,
Format Version 6.00
# ** DO NOT EDIT **

# TARGTYPE "Win32 (x86) Dynamic-Link Library" 0x0102

CFG=tm_com_dll - Win32 Debug
!MESSAGE This is not a valid makefile. To build this
project using NMAKE,
!MESSAGE use the Export Makefile command and run
!MESSAGE
!MESSAGE NMAKE /f "tm_com_dll.mak".
!MESSAGE
!MESSAGE You can specify a configuration when running
NMAKE
!MESSAGE by defining the macro CFG on the command
line. For example:
!MESSAGE
!MESSAGE NMAKE /f "tm_com_dll.mak" CFG="tm_com_dll -
Win32 Debug"
!MESSAGE
!MESSAGE Possible choices for configuration are:
!MESSAGE
!MESSAGE "tm_com_dll - Win32 Release" (based on
"Win32 (x86) Dynamic-Link Library")
!MESSAGE "tm_com_dll - Win32 Debug" (based on "Win32
(x86) Dynamic-Link Library")
!MESSAGE

# Begin Project
# PROP AllowPerConfigDependencies 0
# PROP Scc_ProjName ""
# PROP Scc_LocalPath ""
CPP=cl.exe
MTL=midl.exe
RSC=rc.exe

!IF  "$(CFG)" == "tm_com_dll - Win32 Release"

# PROP BASE Use_MFC 0
# PROP BASE Use_Debug_Libraries 0
# PROP BASE Output_Dir "Release"
# PROP BASE Intermediate_Dir "Release"
# PROP BASE Target_Dir ""
# PROP Use_MFC 0
# PROP Use_Debug_Libraries 0
# PROP Output_Dir ".\bin"
# PROP Intermediate_Dir ".\obj"
# PROP Ignore_Export_Lib 0
# PROP Target_Dir ""
# ADD BASE CPP /nologo /MT /W3 /GX /O2 /D "WIN32" /D
"NDEBUG" /D "_WINDOWS" /YX /FD /c
# ADD CPP /nologo /MD /W3 /GX /O2 /D "WIN32" /D
"NDEBUG" /D "_WINDOWS" /YX /FD /c
# ADD BASE MTL /nologo /D "NDEBUG" /mktyplib203 /o
"NUL" /win32
# ADD MTL /nologo /D "NDEBUG" /mktyplib203 /o "NUL"
/win32
# ADD BASE RSC /l 0x409 /d "NDEBUG"
# ADD RSC /l 0x409 /d "NDEBUG"
BSC32=bscmake.exe
# ADD BASE BSC32 /nologo
# ADD BSC32 /nologo
LINK32=link.exe
# ADD BASE LINK32 kernel32.lib user32.lib gdi32.lib
winspool.lib comdlg32.lib advapi32.lib shell32.lib
ole32.lib oleaut32.lib uuid.lib odbc32.lib
odbccp32.lib /nologo /subsystem:windows /dll
/machine:I386
# ADD LINK32 kernel32.lib user32.lib gdi32.lib
winspool.lib comdlg32.lib advapi32.lib shell32.lib
ole32.lib oleaut32.lib uuid.lib odbc32.lib
odbccp32.lib /nologo /subsystem:windows /dll
/machine:I386 /out:".\bin/tpcc_com.dll"

!ELSEIF  "$(CFG)" == "tm_com_dll - Win32 Debug"

# PROP BASE Use_MFC 0
# PROP BASE Use_Debug_Libraries 1
# PROP BASE Output_Dir "Debug"
# PROP BASE Intermediate_Dir "Debug"
# PROP BASE Target_Dir ""
# PROP Use_MFC 0
# PROP Use_Debug_Libraries 1
# PROP Output_Dir ".\bin"
# PROP Intermediate_Dir ".\obj"
# PROP Ignore_Export_Lib 0
# PROP Target_Dir ""
# ADD BASE CPP /nologo /MTd /W3 /Gm /GX /Zi /Od /D
"WIN32" /D "_DEBUG" /D "_WINDOWS" /YX /FD /c
# ADD CPP /nologo /MDd /W3 /Gm /GX /ZI /Od /D "WIN32"
/D "_DEBUG" /D "_WINDOWS" /YX /FD /c
# ADD BASE MTL /nologo /D "_DEBUG" /mktyplib203 /o
"NUL" /win32
# ADD MTL /nologo /D "_DEBUG" /mktyplib203 /o "NUL"
/win32
# ADD BASE RSC /l 0x409 /d "_DEBUG"
# ADD RSC /l 0x409 /d "_DEBUG"
BSC32=bscmake.exe
# ADD BASE BSC32 /nologo
# ADD BSC32 /nologo
LINK32=link.exe
```


©2005 Hewlett-Packard Company. All rights reserved.

```
# ADD BASE LINK32 kernel32.lib user32.lib gdi32.lib
winspool.lib comdlg32.lib advapi32.lib shell32.lib
ole32.lib oleaut32.lib uuid.lib odbc32.lib
odbccp32.lib /nologo /subsystem:windows /dll /debug
/machine:I386 /pdbtype:sept
# ADD LINK32 kernel32.lib user32.lib gdi32.lib
winspool.lib comdlg32.lib advapi32.lib shell32.lib
ole32.lib oleaut32.lib uuid.lib odbc32.lib
odbccp32.lib /nologo /subsystem:windows /dll /debug
/machine:I386 /out:".\bin/tpcc_com.dll" /pdbtype:sept

!ENDIF

# Begin Target

# Name "tm_com_dll - Win32 Release"
# Name "tm_com_dll - Win32 Debug"
# Begin Source File

SOURCE=.\src\tpcc_com.cpp
# End Source File
# Begin Source File

SOURCE=.\src\tpcc_com.h
# End Source File
# End Target
# End Project
```

tpcc.def

```
LIBRARY TPCC.DLL

EXPORTS

          GetExtensionVersion @1
          HttpExtensionProc   @2
          TerminateExtension  @3
```

tpcc.def

```
LIBRARY TPCC.DLL

EXPORTS

          GetExtensionVersion @1
          HttpExtensionProc   @2
          TerminateExtension  @3
```

tpcc.h

```
/*        FILE:               TPCC.H
 *                                        Microsoft
TPC-C Kit Ver. 4.20.000
 *                                        Copyright
Microsoft, 1999
 *              All Rights Reserved
 *
 *                                        Version
4.10.000 audited by Richard Gimarc, Performance
Metrics, 3/17/99
 *
 *        PURPOSE:  Header file for ISAPI TPCC.DLL,
defines structures and functions used in the isapi
tpcc.dll.
 *
 */

//VERSION RESOURCE DEFINES
#define _APS_NEXT_RESOURCE_VALUE
                    101
#define _APS_NEXT_COMMAND_VALUE
                                  40001
#define _APS_NEXT_CONTROL_VALUE
                                  1000
#define _APS_NEXT_SYMED_VALUE
                    101

#define TP_MAX_RETRIES
                                        50


//note that the welcome form must be processed first
as terminal ids assigned here, once the
//terminal id is assigned then the forms can be
processed in any order.
#define WELCOME_FORM
                                  1
          //beginning form no term id assigned, form
id
#define MAIN_MENU_FORM
                                  2
          //term id assigned main menu form id
#define NEW_ORDER_FORM
                                  3
          //new order form id
#define PAYMENT_FORM
                                  4
          //payment form id
#define DELIVERY_FORM
                                  5
          //delivery form id
#define ORDER_STATUS_FORM
                    6                   //order
status id
#define STOCK_LEVEL_FORM
                    7                   //stock level
form id

//This macro is used to prevent the compiler error
unused formal parameter
#define UNUSEDPARAM(x)  (x = x)


//This structure defines the data necessary to keep
distinct for each terminal or client connection.
typedef struct _CLIENTDATA
{
          int                             iNextFree;
                                          //index of
next free element or -1 if this entry in use.
          int                             w_id;
                                          //warehouse
id assigned at welcome form
          int                             d_id;
                                          //district id
assigned at welcome form

          int                             iSyncId;
                              //syncronization id
          int                             iTickCount;
                                          //time of
last access;

          CTPCC_BASE          *pTxn;

} CLIENTDATA, *PCLIENTDATA;


//This structure is used to define the operational
interface for terminal id support
typedef struct _TERM
{
          int                             iNumEntries;

          //total allocated terminal array entries
          int                             iFreeList;

          //next available terminal array element or
-1 if none
          int
          iMasterSyncId;
                    //syncronization id
          CLIENTDATA          *pClientData;
                                          //pointer to
allocated client data
} TERM;

typedef TERM *PTERM;
                                          //pointer to
terminal structure type


          enum WEBERROR
          {
                    NO_ERR,
                    ERR_COMMAND_UNDEFINED,
                    ERR_D_ID_INVALID,
                    ERR_DELIVERY_CARRIER_ID_RANGE,
                    ERR_DELIVERY_CARRIER_INVALID,
                    ERR_DELIVERY_MISSING_OCD_KEY,
                    ERR_DELIVERY_THREAD_FAILED,
                    ERR_GETPROCADDR_FAILED,
                    ERR_HTML_ILL_FORMED,
                    ERR_INVALID_SYNC_CONNECTION,
                    ERR_INVALID_TERMID,
                    ERR_LOADDLL_FAILED,
                    ERR_MAX_CONNECTIONS_EXCEEDED,
                    ERR_MEM_ALLOC_FAILED,
                    ERR_MISSING_REGISTRY_ENTRIES,
```


©2005 Hewlett-Packard Company. All rights reserved.

```
                ERR_NEWORDER_CUSTOMER_INVALID,
                ERR_NEWORDER_CUSTOMER_KEY,
                ERR_NEWORDER_DISTRICT_INVALID,
                ERR_NEWORDER_FORM_MISSING_DID,
                ERR_NEWORDER_ITEMID_INVALID,
                ERR_NEWORDER_ITEMID_RANGE,

        ERR_NEWORDER_ITEMID_WITHOUT_SUPPW,
                ERR_NEWORDER_MISSING_IID_KEY,
                ERR_NEWORDER_MISSING_QTY_KEY,
                ERR_NEWORDER_MISSING_SUPPW_KEY,
                ERR_NEWORDER_NOITEMS_ENTERED,
                ERR_NEWORDER_QTY_INVALID,
                ERR_NEWORDER_QTY_RANGE,
                ERR_NEWORDER_QTY_WITHOUT_SUPPW,
                ERR_NEWORDER_SUPPW_INVALID,
                ERR_NO_SERVER_SPECIFIED,
                ERR_ORDERSTATUS_CID_AND_CLT,
                ERR_ORDERSTATUS_CID_INVALID,
                ERR_ORDERSTATUS_CLT_RANGE,
                ERR_ORDERSTATUS_DID_INVALID,
                ERR_ORDERSTATUS_MISSING_CID_CLT,
                ERR_ORDERSTATUS_MISSING_CID_KEY,
                ERR_ORDERSTATUS_MISSING_CLT_KEY,
                ERR_ORDERSTATUS_MISSING_DID_KEY,
                ERR_PAYMENT_CDI_INVALID,
                ERR_PAYMENT_CID_AND_CLT,
                ERR_PAYMENT_CUSTOMER_INVALID,
                ERR_PAYMENT_CWI_INVALID,
                ERR_PAYMENT_DISTRICT_INVALID,
                ERR_PAYMENT_HAM_INVALID,
                ERR_PAYMENT_HAM_RANGE,
                ERR_PAYMENT_LAST_NAME_TO_LONG,
                ERR_PAYMENT_MISSING_CDI_KEY,
                ERR_PAYMENT_MISSING_CID_CLT,
                ERR_PAYMENT_MISSING_CID_KEY,
                ERR_PAYMENT_MISSING_CLT,
                ERR_PAYMENT_MISSING_CLT_KEY,
                ERR_PAYMENT_MISSING_CWI_KEY,
                ERR_PAYMENT_MISSING_DID_KEY,
                ERR_PAYMENT_MISSING_HAM_KEY,

        ERR_STOCKLEVEL_MISSING_THRESHOLD_KEY,
                ERR_STOCKLEVEL_THRESHOLD_INVALID,
                ERR_STOCKLEVEL_THRESHOLD_RANGE,
                ERR_VERSION_MISMATCH,
                ERR_W_ID_INVALID
        };

class CWEBCLNT_ERR : public CBaseErr
{
        public:

                CWEBCLNT_ERR(WEBERROR Err)
                {
                        m_Error = Err;
                        m_szTextDetail = NULL;
                        m_SystemErr = 0;
                        m_szErrorText = NULL;
                };

                CWEBCLNT_ERR(WEBERROR Err, char
*szTextDetail, DWORD dwSystemErr)
                {
                        m_Error = Err;
                        m_szTextDetail = new
char[strlen(szTextDetail)+1];
                        strcpy( m_szTextDetail,
szTextDetail );
                        m_SystemErr =
dwSystemErr;
                        m_szErrorText = NULL;
                };

                ~CWEBCLNT_ERR()
                {
                        if (m_szTextDetail !=
NULL)
                                delete []
m_szTextDetail;
                        if (m_szErrorText !=
NULL)
                                delete []
m_szErrorText;
                };

                WEBERROR  m_Error;
                char
        *m_szTextDetail;    //
                char
        *m_szErrorText;
                DWORD           m_SystemErr;

                int ErrorType() {return
ERR_TYPE_WEBDLL;};
                int ErrorNum() {return m_Error;};
                char *ErrorText();

};

//These constants have already been defined in
engstut.h, but since we do
//not want to include it in the delisrv executable
#define   TXN_EVENT_START               2
#define   TXN_EVENT_STOP                4
#define TXN_EVENT_WARNING     6
        //used to record a warning into the log

//function prototypes

BOOL APIENTRY DllMain(HANDLE hModule, DWORD
ul_reason_for_call, LPVOID lpReserved);
void WriteMessageToEventLog(LPTSTR lpszMsg);
void ProcessQueryString(EXTENSION_CONTROL_BLOCK
*pECB, int *pCmd, int *pFormId, int *pTermId, int
*pSyncId);
void WelcomeForm(EXTENSION_CONTROL_BLOCK *pECB, char
*szBuffer);
void SubmitCmd(EXTENSION_CONTROL_BLOCK *pECB, char
*szBuffer);
void BeginCmd(EXTENSION_CONTROL_BLOCK *pECB, int
iFormId, int iTermId);
void ProcessCmd(EXTENSION_CONTROL_BLOCK *pECB, int
iFormId, int iTermId);
void StatsCmd(EXTENSION_CONTROL_BLOCK *pECB, char
*szBuffer);
void ErrorMessage(EXTENSION_CONTROL_BLOCK *pECB, int
iError, int iErrorType, char *szMsg, int iTermId);
void GetKeyValue(char **pQueryString, char *pKey,
char *pValue, int iMax, WEBERROR err);
int  GetIntKeyValue(char **pQueryString, char *pKey,
WEBERROR NoKeyErr, WEBERROR NotIntErr);
void TermInit(void);
void TermDeleteAll(void);
int  TermAdd(void);
void TermDelete(int id);
void ErrorForm(EXTENSION_CONTROL_BLOCK *pECB, int
iType, int iErrorNum, int iTermId, int iSyncId, char
*szErrorText, char *szBuffer );
void MakeMainMenuForm(int iTermId, int iSyncId, char
*szForm);
void MakeStockLevelForm(int iTermId, STOCK_LEVEL_DATA
*pStockLevelData, BOOL bInput, char *szForm);
void MakeNewOrderForm(int iTermId, NEW_ORDER_DATA
*pNewOrderData, BOOL bInput, char *szForm);
void MakePaymentForm(int iTermId, PAYMENT_DATA
*pPaymentData, BOOL bInput, char *szForm);
void MakeOrderStatusForm(int iTermId,
ORDER_STATUS_DATA *pOrderStatusData, BOOL bInput,
char *szForm);
void MakeDeliveryForm(int iTermId, DELIVERY_DATA
*pDeliveryData, BOOL bInput, char *szForm);
void ProcessNewOrderForm(EXTENSION_CONTROL_BLOCK
          *pECB, int iTermId, char *szBuffer);
void ProcessPaymentForm(EXTENSION_CONTROL_BLOCK
*pECB, int iTermId, char *szBuffer);
void ProcessOrderStatusForm(EXTENSION_CONTROL_BLOCK
*pECB, int iTermId, char *szBuffer);
void ProcessDeliveryForm(EXTENSION_CONTROL_BLOCK
*pECB, int iTermId, char *szBuffer);
void ProcessStockLevelForm(EXTENSION_CONTROL_BLOCK
*pECB, int iTermId, char *szBuffer);
void GetNewOrderData(LPSTR lpszQueryString,
NEW_ORDER_DATA *pNewOrderData);
void GetPaymentData(LPSTR lpszQueryString,
PAYMENT_DATA *pPaymentData);
void GetOrderStatusData(LPSTR lpszQueryString,
ORDER_STATUS_DATA *pOrderStatusData);
BOOL PostDeliveryInfo(short w_id, short
o_carrier_id);
BOOL IsNumeric(char *ptr);
BOOL IsDecimal(char *ptr);
void DeliveryWorkerThread(void *ptr);
```

tpcc.rc

```
//Microsoft Developer Studio generated resource
script.
//
#include "resource.h"

#define APSTUDIO_READONLY_SYMBOLS
/////////////////////////////////////////////////////
//////////////////////
//
// Generated from the TEXTINCLUDE 2 resource.
```


©2005 Hewlett-Packard Company. All rights reserved.

```
//
#include "afxres.h"

/////////////////////////////////////////////////////
///////////////////////
#undef APSTUDIO_READONLY_SYMBOLS

/////////////////////////////////////////////////////
///////////////////////
// English (U.S.) resources

#if !defined(AFX_RESOURCE_DLL) ||
defined(AFX_TARG_ENU)
#ifdef _WIN32
LANGUAGE LANG_ENGLISH, SUBLANG_ENGLISH_US
#pragma code_page(1252)
#endif //_WIN32

#ifndef _MAC
/////////////////////////////////////////////////////
///////////////////////
//
// Version
//

VS_VERSION_INFO VERSIONINFO
 FILEVERSION 0,4,0,0
 PRODUCTVERSION 0,4,0,0
 FILEFLAGSMASK 0x3fL
#ifdef _DEBUG
 FILEFLAGS 0x1L
#else
 FILEFLAGS 0x0L
#endif
 FILEOS 0x40004L
 FILETYPE 0x2L
 FILESUBTYPE 0x0L
BEGIN
    BLOCK "StringFileInfo"
    BEGIN
        BLOCK "040904b0"
        BEGIN
            VALUE "Comments", "TPC-C HTML DLL Server
(DBLIB)\0"
            VALUE "CompanyName", "Microsoft\0"
            VALUE "FileDescription", "TPC-C HTML DLL
Server (DBLIB)\0"
            VALUE "FileVersion", "0, 4, 0, 0\0"
            VALUE "InternalName", "tpcc\0"
            VALUE "LegalCopyright", "Copyright ©
1997\0"
            VALUE "OriginalFilename", "tpcc.dll\0"
            VALUE "ProductName", "Microsoft tpcc\0"
            VALUE "ProductVersion", "0, 4, 0, 0\0"
        END
    END
    BLOCK "VarFileInfo"
    BEGIN
        VALUE "Translation", 0x409, 1200
    END
END

#endif    // !_MAC


#ifdef APSTUDIO_INVOKED
/////////////////////////////////////////////////////
///////////////////////
//
// TEXTINCLUDE
//

1 TEXTINCLUDE DISCARDABLE
BEGIN
    "resource.h\0"
END

2 TEXTINCLUDE DISCARDABLE
BEGIN
    "#include ""afxres.h""\r\n"
    "\0"
END

3 TEXTINCLUDE DISCARDABLE
BEGIN
    "\r\n"
    "\0"
END

#endif    // APSTUDIO_INVOKED


/////////////////////////////////////////////////////
///////////////////////
//
// Dialog
//

IDD_DIALOG1 DIALOG DISCARDABLE  0, 0, 186, 95
STYLE DS_MODALFRAME | WS_POPUP | WS_CAPTION |
WS_SYSMENU
CAPTION "Dialog"
FONT 8, "MS Sans Serif"
BEGIN
    DEFPUSHBUTTON   "OK",IDOK,129,7,50,14
    PUSHBUTTON      "Cancel",IDCANCEL,129,24,50,14
END


/////////////////////////////////////////////////////
///////////////////////
//
// DESIGNINFO
//

#ifdef APSTUDIO_INVOKED
GUIDELINES DESIGNINFO DISCARDABLE
BEGIN
    IDD_DIALOG1, DIALOG
    BEGIN
        LEFTMARGIN, 7
        RIGHTMARGIN, 179
        TOPMARGIN, 7
        BOTTOMMARGIN, 88
    END
END

#endif    // APSTUDIO_INVOKED

#endif    // English (U.S.) resources
/////////////////////////////////////////////////////
///////////////////////


#ifndef APSTUDIO_INVOKED
/////////////////////////////////////////////////////
///////////////////////
//
// Generated from the TEXTINCLUDE 3 resource.
//


/////////////////////////////////////////////////////
///////////////////////
#endif    // not APSTUDIO_INVOKED
```

tpcc_com.cpp

```
/*        FILE:               TPCC_COM.CPP
 *                                          Microsoft
TPC-C Kit Ver. 4.20.000
 *                                          Copyright
Microsoft, 1999
 *              All Rights Reserved
 *
 *                                          not yet
audited
 *
 *        PURPOSE:  Source file for TPC-C COM+ class
implementation.
 *        Contact:  Charles Levine
(clevine@microsoft.com)
 *
 *  Change history:
 *                  4.20.000 - first version
 */

// needed for CoinitializeEx
#define _WIN32_WINNT 0x0400

#include <windows.h>

// need to declare functions for export
#define DllDecl  __declspec( dllexport )

#include "..\..\common\src\trans.h"
          //tpckit transaction header contains
definations of structures specific to TPC-C
#include "..\..\common\src\error.h"
#include "..\..\common\src\txn_base.h"
#include "tpcc_com.h"

#include "..\..\tpcc_com_ps\src\tpcc_com_ps_i.c"
#include "..\..\tpcc_com_all\src\tpcc_com_all_i.c"
```


©2005 Hewlett-Packard Company. All rights reserved.

```
// wrapper routine for class constructor
__declspec(dllexport) CTPCC_COM* CTPCC_COM_new(BOOL
bSinglePool)
{
	return new CTPCC_COM(bSinglePool);
}

CTPCC_COM::CTPCC_COM(BOOL bSinglePool)
{
	HRESULT hr = NULL;
	long lRet = 0;
	ULONG ulTmpSize = 0;

	m_pTxn				= NULL;
	m_pNewOrder			= NULL;
	m_pPayment			= NULL;
	m_pStockLevel		= NULL;
	m_pOrderStatus		= NULL;

	m_bSinglePool		= bSinglePool;

	ulTmpSize = (ULONG) sizeof(COM_DATA);
	VariantInit(&m_vTxn);
	m_vTxn.vt = VT_SAFEARRAY;

	m_vTxn.parray =
SafeArrayCreateVector(VT_UI1, ulTmpSize, ulTmpSize);
	if (!m_vTxn.parray)
		throw new CCOMERR( E_FAIL );

	memset((void*)m_vTxn.parray-
>pvData,0,ulTmpSize);
	m_pTxn = (COM_DATA*)m_vTxn.parray->pvData;

	hr = CoInitializeEx(NULL,
COINIT_MULTITHREADED);
	if (FAILED(hr))
	{
		throw new CCOMERR( hr );
	}

	// create components
	if (m_bSinglePool)
	{
		hr = CoCreateInstance(CLSID_TPCC,
NULL, CLSCTX_SERVER, IID_ITPCC, (void
**)&m_pNewOrder);
		if (FAILED(hr))
			throw new CCOMERR(hr);

		// all txns will use same
component
		m_pPayment = m_pNewOrder;
		m_pStockLevel = m_pNewOrder;
		m_pOrderStatus = m_pNewOrder;
	}
	else
	{
		// use different components for
each txn
		hr =
CoCreateInstance(CLSID_NewOrder, NULL, CLSCTX_SERVER,
IID_ITPCC, (void **)&m_pNewOrder);
		if (FAILED(hr))
			throw new CCOMERR(hr);

		hr =
CoCreateInstance(CLSID_Payment, NULL, CLSCTX_SERVER,
IID_ITPCC, (void **)&m_pPayment);
		if (FAILED(hr))
			throw new CCOMERR(hr);

		hr =
CoCreateInstance(CLSID_StockLevel, NULL,
CLSCTX_SERVER, IID_ITPCC, (void **)&m_pStockLevel);
		if (FAILED(hr))
			throw new CCOMERR(hr);

		hr =
CoCreateInstance(CLSID_OrderStatus, NULL,
CLSCTX_SERVER, IID_ITPCC, (void **)&m_pOrderStatus);
		if (FAILED(hr))
			throw new CCOMERR(hr);
	}

	// call setcomplete to release each
component back into pool
	hr = m_pNewOrder->CallSetComplete();
	if (FAILED(hr))
		throw new CCOMERR(hr);

	if (!m_bSinglePool)
	{
		hr = m_pPayment-
>CallSetComplete();
		if (FAILED(hr))
			throw new CCOMERR(hr);

		hr = m_pStockLevel-
>CallSetComplete();
		if (FAILED(hr))
			throw new CCOMERR(hr);

		hr = m_pOrderStatus-
>CallSetComplete();
		if (FAILED(hr))
			throw new CCOMERR(hr);
	}
}

CTPCC_COM::~CTPCC_COM()
{
	if (m_pTxn)
		SafeArrayDestroy(m_vTxn.parray);

	ReleaseInterface(m_pNewOrder);
	if (!m_bSinglePool)
	{
		ReleaseInterface(m_pPayment);
		ReleaseInterface(m_pStockLevel);
		ReleaseInterface(m_pOrderStatus);
	}
	CoUninitialize();
}

void CTPCC_COM::NewOrder()
{
	VARIANT	vTxn_out;

	HRESULT hr = m_pNewOrder->NewOrder(m_vTxn,
&vTxn_out);
	if (FAILED(hr))
		throw new CCOMERR( hr );
	memcpy(m_pTxn, (void *)vTxn_out.parray-
>pvData,vTxn_out.parray->rgsabound[0].cElements);
	SafeArrayDestroy(vTxn_out.parray);

	if ( m_pTxn->ErrorType != ERR_SUCCESS )
		throw new CCOMERR( m_pTxn-
>ErrorType, m_pTxn->error );
}

void CTPCC_COM::Payment()
{
	VARIANT	vTxn_out;

	HRESULT hr = m_pPayment->Payment(m_vTxn,
&vTxn_out);
	if (FAILED(hr))
		throw new CCOMERR( hr );
	memcpy(m_pTxn, (void *)vTxn_out.parray-
>pvData,vTxn_out.parray->rgsabound[0].cElements);
	SafeArrayDestroy(vTxn_out.parray);

	if ( m_pTxn->ErrorType != ERR_SUCCESS )
		throw new CCOMERR( m_pTxn-
>ErrorType, m_pTxn->error );
}

void CTPCC_COM::StockLevel()
{
	VARIANT	vTxn_out;

	HRESULT hr = m_pStockLevel-
>StockLevel(m_vTxn, &vTxn_out);
	if (FAILED(hr))
		throw new CCOMERR( hr );
	memcpy(m_pTxn, (void *)vTxn_out.parray-
>pvData,vTxn_out.parray->rgsabound[0].cElements);
	SafeArrayDestroy(vTxn_out.parray);

	if ( m_pTxn->ErrorType != ERR_SUCCESS )
		throw new CCOMERR( m_pTxn-
>ErrorType, m_pTxn->error );
}

void CTPCC_COM::OrderStatus()
{
	VARIANT	vTxn_out;

	HRESULT hr = m_pOrderStatus-
>OrderStatus(m_vTxn, &vTxn_out);
	if (FAILED(hr))
		throw new CCOMERR( hr );
	memcpy(m_pTxn, (void *)vTxn_out.parray-
>pvData,vTxn_out.parray->rgsabound[0].cElements);
```


©2005 Hewlett-Packard Company. All rights reserved.

```
        SafeArrayDestroy(vTxn_out.parray);

        if ( m_pTxn->ErrorType != ERR_SUCCESS )
                throw new CCOMERR( m_pTxn-
>ErrorType, m_pTxn->error );
}
```

tpcc_com.h

```
/*      FILE:               TPCC_COM.H
 *                                      Microsoft
TPC-C Kit Ver. 4.20.000
 *                                      Copyright
Microsoft, 1999
 *              All Rights Reserved
 *
 *                                      not yet
audited
 *
 *      PURPOSE:  Header file for TPC-C COM+ class
implementation.
 *
 *  Change history:
 *                  4.20.000 - first version
 */

#pragma once

#include <stdio.h>
#include "..\..\tpcc_com_ps\src\tpcc_com_ps.h"

// need to declare functions for import, unless
define has already been created
// by the DLL's .cpp module for export.
#ifndef DllDecl
#define DllDecl  __declspec( dllimport )
#endif

class CCOMERR : public CBaseErr
{
        private:
                char m_szErrorText[64];

        public:
                // use this interface for genuine
COM errors
                CCOMERR( HRESULT hr )
                {
                        m_hr = hr;
                        m_iErrorType = 0;
                        m_iError = 0;
                }

                // use this interface to
impersonate a non-COM error type
                CCOMERR( int iErrorType, int
iError )
                {
                        m_iErrorType =
iErrorType;
                        m_iError = iError;
                        m_hr = S_OK;
                }

                int             m_hr;
                int             m_iErrorType;
                int             m_iError;

                // A CCOMERR class can
impersonate another class, which happens if the error
                // was not actually a COM
Services error, but was simply transmitted back via
COM.
                int ErrorType()
                {
                        if (m_iErrorType == 0)
                                return
ERR_TYPE_COM;
                        else
                                return
m_iErrorType;
                }

                int ErrorNum() {return m_hr;}

                char *ErrorText()
                {
                        if (m_hr == S_OK)
                                sprintf(
m_szErrorText, "Error: Class %d, error # %d",
m_iErrorType, m_iError );
                        else
                                sprintf(
m_szErrorText, "Error: COM HRESULT %x", m_hr );
                        return m_szErrorText;
                }
};

class DllDecl CTPCC_COM : public CTPCC_BASE
{
        private:
                BOOL m_bSinglePool;

                // COM Interface pointers
                ITPCC*
        m_pNewOrder;
                ITPCC*
        m_pPayment;
                ITPCC*
        m_pStockLevel;
                ITPCC*
        m_pOrderStatus;

                struct COM_DATA
                {
                        int ErrorType;
                        int error;
                        union
                        {

        NEW_ORDER_DATA          NewOrder;
                                PAYMENT_DATA
                Payment;
                                        DELIVERY_DATA
                Delivery;

        STOCK_LEVEL_DATA    StockLevel;

        ORDER_STATUS_DATA   OrderStatus;
                        } u;
                } *m_pTxn;

                VARIANT m_vTxn;
        public:
                CTPCC_COM(BOOL bSinglePool);
                ~CTPCC_COM(void);

                inline PNEW_ORDER_DATA
        BuffAddr_NewOrder()         { return
&m_pTxn->u.NewOrder;    };
                inline PPAYMENT_DATA
        BuffAddr_Payment()          { return
&m_pTxn->u.Payment;     };
                inline PDELIVERY_DATA
        BuffAddr_Delivery()         { return
&m_pTxn->u.Delivery;    };
                inline PSTOCK_LEVEL_DATA
        BuffAddr_StockLevel()       { return
&m_pTxn->u.StockLevel;  };
                inline PORDER_STATUS_DATA
        BuffAddr_OrderStatus()      { return
&m_pTxn->u.OrderStatus; };

                void NewOrder                   ();
                void Payment                    ();
                void StockLevel                 ();
                void OrderStatus    ();
                void Delivery                   ()
{ throw new CCOMERR(E_NOTIMPL); }  // not supported
};


inline void ReleaseInterface(IUnknown *pUnk)
{
        if (pUnk)
        {
                pUnk->Release();
                pUnk = NULL;
        }
}


// wrapper routine for class constructor
extern "C" __declspec(dllexport) CTPCC_COM*
CTPCC_COM_new(BOOL);

typedef CTPCC_COM* (TYPE_CTPCC_COM)(BOOL);
```

tpcc_com_all_i.c

```
#pragma warning( disable: 4049 )  /* more than 64k
source lines */
```


©2005 Hewlett-Packard Company. All rights reserved.

```
/* this ALWAYS GENERATED file contains the IIDs and
CLSIDs */

/* link this file in with the server and any clients
*/


 /* File created by MIDL compiler version 5.03.0280
*/
/* at Thu Dec 13 23:13:14 2001
 */
/* Compiler settings for .\src\tpcc_com_all.idl:
    Oicf (OptLev=i2), W1, Zp8, env=Win32 (32b run),
ms_ext, c_ext
    error checks: allocation ref bounds_check enum
stub_data
    VC __declspec() decoration level:
         __declspec(uuid()), __declspec(selectany),
__declspec(novtable)
         DECLSPEC_UUID(), MIDL_INTERFACE()
*/
//@@MIDL_FILE_HEADING(  )

#if !defined(_M_IA64) && !defined(_M_AXP64)

#ifdef __cplusplus
extern "C"{
#endif


#include <rpc.h>
#include <rpcndr.h>

#ifdef _MIDL_USE_GUIDDEF_

#ifndef INITGUID
#define INITGUID
#include <guiddef.h>
#undef INITGUID
#else
#include <guiddef.h>
#endif

#define
MIDL_DEFINE_GUID(type,name,l,w1,w2,b1,b2,b3,b4,b5,b6,
b7,b8) \

DEFINE_GUID(name,l,w1,w2,b1,b2,b3,b4,b5,b6,b7,b8)

#else // !_MIDL_USE_GUIDDEF_

#ifndef __IID_DEFINED__
#define __IID_DEFINED__

typedef struct _IID
{
    unsigned long x;
    unsigned short s1;
    unsigned short s2;
    unsigned char  c[8];
} IID;
```

```
#endif // __IID_DEFINED__

#ifndef CLSID_DEFINED
#define CLSID_DEFINED
typedef IID CLSID;
#endif // CLSID_DEFINED

#define
MIDL_DEFINE_GUID(type,name,l,w1,w2,b1,b2,b3,b4,b5,b6,
b7,b8) \
        const type name =
{l,w1,w2,{b1,b2,b3,b4,b5,b6,b7,b8}}

#endif !_MIDL_USE_GUIDDEF_

MIDL_DEFINE_GUID(IID,
LIBID_TPCCLib,0x122A3117,0x2520,0x11D3,0xBA,0x71,0x00
,0xC0,0x4F,0xBF,0xE0,0x8B);


MIDL_DEFINE_GUID(CLSID,
CLSID_TPCC,0x122A3128,0x2520,0x11D3,0xBA,0x71,0x00,0x
C0,0x4F,0xBF,0xE0,0x8B);


MIDL_DEFINE_GUID(CLSID,
CLSID_NewOrder,0x975BAABF,0x84A7,0x11D2,0xBA,0x47,0x0
0,0xC0,0x4F,0xBF,0xE0,0x8B);


MIDL_DEFINE_GUID(CLSID,
CLSID_OrderStatus,0x266836AD,0xA50D,0x11D2,0xBA,0x4E,
0x00,0xC0,0x4F,0xBF,0xE0,0x8B);


MIDL_DEFINE_GUID(CLSID,
CLSID_Payment,0xCD02F7EF,0xA4FA,0x11D2,0xBA,0x4E,0x00
,0xC0,0x4F,0xBF,0xE0,0x8B);


MIDL_DEFINE_GUID(CLSID,
CLSID_StockLevel,0x2668369E,0xA50D,0x11D2,0xBA,0x4E,0
x00,0xC0,0x4F,0xBF,0xE0,0x8B);

#undef MIDL_DEFINE_GUID

#ifdef __cplusplus
}
#endif



#endif /* !defined(_M_IA64) && !defined(_M_AXP64)*/


#pragma warning( disable: 4049 )  /* more than 64k
source lines */

/* this ALWAYS GENERATED file contains the IIDs and
CLSIDs */

/* link this file in with the server and any clients
*/
```

```
 /* File created by MIDL compiler version 5.03.0280
*/
/* at Thu Dec 13 23:13:14 2001
 */
/* Compiler settings for .\src\tpcc_com_all.idl:
    Oicf (OptLev=i2), W1, Zp8, env=Win64 (32b
run,appending), ms_ext, c_ext, robust
    error checks: allocation ref bounds_check enum
stub_data
    VC __declspec() decoration level:
         __declspec(uuid()), __declspec(selectany),
__declspec(novtable)
         DECLSPEC_UUID(), MIDL_INTERFACE()
*/
//@@MIDL_FILE_HEADING(  )

#if defined(_M_IA64) || defined(_M_AXP64)

#ifdef __cplusplus
extern "C"{
#endif


#include <rpc.h>
#include <rpcndr.h>

#ifdef _MIDL_USE_GUIDDEF_

#ifndef INITGUID
#define INITGUID
#include <guiddef.h>
#undef INITGUID
#else
#include <guiddef.h>
#endif

#define
MIDL_DEFINE_GUID(type,name,l,w1,w2,b1,b2,b3,b4,b5,b6,
b7,b8) \

DEFINE_GUID(name,l,w1,w2,b1,b2,b3,b4,b5,b6,b7,b8)

#else // !_MIDL_USE_GUIDDEF_

#ifndef __IID_DEFINED__
#define __IID_DEFINED__

typedef struct _IID
{
    unsigned long x;
    unsigned short s1;
    unsigned short s2;
    unsigned char  c[8];
} IID;

#endif // __IID_DEFINED__

#ifndef CLSID_DEFINED
#define CLSID_DEFINED
typedef IID CLSID;
#endif // CLSID_DEFINED
```


©2005 Hewlett-Packard Company. All rights reserved.

```
#define
MIDL_DEFINE_GUID(type,name,l,w1,w2,b1,b2,b3,b4,b5,b6,
b7,b8) \
        const type name =
{l,w1,w2,{b1,b2,b3,b4,b5,b6,b7,b8}}

#endif !_MIDL_USE_GUIDDEF_

MIDL_DEFINE_GUID(IID,
LIBID_TPCCLib,0x122A3117,0x2520,0x11D3,0xBA,0x71,0x00
,0xC0,0x4F,0xBF,0xE0,0x8B);


MIDL_DEFINE_GUID(CLSID,
CLSID_TPCC,0x122A3128,0x2520,0x11D3,0xBA,0x71,0x00,0x
C0,0x4F,0xBF,0xE0,0x8B);


MIDL_DEFINE_GUID(CLSID,
CLSID_NewOrder,0x975BAABF,0x84A7,0x11D2,0xBA,0x47,0x0
0,0xC0,0x4F,0xBF,0xE0,0x8B);


MIDL_DEFINE_GUID(CLSID,
CLSID_OrderStatus,0x266836AD,0xA50D,0x11D2,0xBA,0x4E,
0x00,0xC0,0x4F,0xBF,0xE0,0x8B);


MIDL_DEFINE_GUID(CLSID,
CLSID_Payment,0xCD02F7EF,0xA4FA,0x11D2,0xBA,0x4E,0x00
,0xC0,0x4F,0xBF,0xE0,0x8B);


MIDL_DEFINE_GUID(CLSID,
CLSID_StockLevel,0x2668369E,0xA50D,0x11D2,0xBA,0x4E,0
x00,0xC0,0x4F,0xBF,0xE0,0x8B);

#undef MIDL_DEFINE_GUID

#ifdef __cplusplus
}
#endif


#endif /* defined(_M_IA64) || defined(_M_AXP64)*/
```

tpcc_com_all_i.c

```
#pragma warning( disable: 4049 )  /* more than 64k
source lines */

/* this ALWAYS GENERATED file contains the IIDs and
CLSIDs */

/* link this file in with the server and any clients
*/


 /* File created by MIDL compiler version 5.03.0280
*/
/* at Thu Dec 13 23:13:14 2001
 */
/* Compiler settings for .\src\tpcc_com_all.idl:
    Oicf (OptLev=i2), W1, Zp8, env=Win32 (32b run),
ms_ext, c_ext
    error checks: allocation ref bounds_check enum
stub_data
    VC __declspec() decoration level:
         __declspec(uuid()), __declspec(selectany),
__declspec(novtable)
         DECLSPEC_UUID(), MIDL_INTERFACE()
*/
//@@MIDL_FILE_HEADING(  )

#if !defined(_M_IA64) && !defined(_M_AXP64)

#ifdef __cplusplus
extern "C"{
#endif


#include <rpc.h>
#include <rpcndr.h>

#ifdef _MIDL_USE_GUIDDEF_

#ifndef INITGUID
#define INITGUID
#include <guiddef.h>
#undef INITGUID
#else
#include <guiddef.h>
#endif

#define
MIDL_DEFINE_GUID(type,name,l,w1,w2,b1,b2,b3,b4,b5,b6,
b7,b8) \

DEFINE_GUID(name,l,w1,w2,b1,b2,b3,b4,b5,b6,b7,b8)

#else // !_MIDL_USE_GUIDDEF_

#ifndef __IID_DEFINED__
#define __IID_DEFINED__

typedef struct _IID
{
    unsigned long x;
    unsigned short s1;
    unsigned short s2;
    unsigned char  c[8];
} IID;

#endif // __IID_DEFINED__

#ifndef CLSID_DEFINED
#define CLSID_DEFINED
typedef IID CLSID;
#endif // CLSID_DEFINED

#define
MIDL_DEFINE_GUID(type,name,l,w1,w2,b1,b2,b3,b4,b5,b6,
b7,b8) \
        const type name =
{l,w1,w2,{b1,b2,b3,b4,b5,b6,b7,b8}}

#endif !_MIDL_USE_GUIDDEF_

MIDL_DEFINE_GUID(IID,
LIBID_TPCCLib,0x122A3117,0x2520,0x11D3,0xBA,0x71,0x00
,0xC0,0x4F,0xBF,0xE0,0x8B);


MIDL_DEFINE_GUID(CLSID,
CLSID_TPCC,0x122A3128,0x2520,0x11D3,0xBA,0x71,0x00,0x
C0,0x4F,0xBF,0xE0,0x8B);


MIDL_DEFINE_GUID(CLSID,
CLSID_NewOrder,0x975BAABF,0x84A7,0x11D2,0xBA,0x47,0x0
0,0xC0,0x4F,0xBF,0xE0,0x8B);


MIDL_DEFINE_GUID(CLSID,
CLSID_OrderStatus,0x266836AD,0xA50D,0x11D2,0xBA,0x4E,
0x00,0xC0,0x4F,0xBF,0xE0,0x8B);


MIDL_DEFINE_GUID(CLSID,
CLSID_Payment,0xCD02F7EF,0xA4FA,0x11D2,0xBA,0x4E,0x00
,0xC0,0x4F,0xBF,0xE0,0x8B);


MIDL_DEFINE_GUID(CLSID,
CLSID_StockLevel,0x2668369E,0xA50D,0x11D2,0xBA,0x4E,0
x00,0xC0,0x4F,0xBF,0xE0,0x8B);

#undef MIDL_DEFINE_GUID

#ifdef __cplusplus
}
#endif


#endif /* !defined(_M_IA64) && !defined(_M_AXP64)*/


#pragma warning( disable: 4049 )  /* more than 64k
source lines */

/* this ALWAYS GENERATED file contains the IIDs and
CLSIDs */

/* link this file in with the server and any clients
*/


 /* File created by MIDL compiler version 5.03.0280
*/
/* at Thu Dec 13 23:13:14 2001
 */
```


©2005 Hewlett-Packard Company. All rights reserved.

```
/* Compiler settings for .\src\tpcc_com_all.idl:
    Oicf (OptLev=i2), W1, Zp8, env=Win64 (32b
run,appending), ms_ext, c_ext, robust
    error checks: allocation ref bounds_check enum
stub_data
    VC __declspec() decoration level:
         __declspec(uuid()), __declspec(selectany),
__declspec(novtable)
         DECLSPEC_UUID(), MIDL_INTERFACE()
*/
//@@MIDL_FILE_HEADING(  )

#if defined(_M_IA64) || defined(_M_AXP64)

#ifdef __cplusplus
extern "C"{
#endif


#include <rpc.h>
#include <rpcndr.h>

#ifdef _MIDL_USE_GUIDDEF_

#ifndef INITGUID
#define INITGUID
#include <guiddef.h>
#undef INITGUID
#else
#include <guiddef.h>
#endif

#define
MIDL_DEFINE_GUID(type,name,l,w1,w2,b1,b2,b3,b4,b5,b6,
b7,b8) \

DEFINE_GUID(name,l,w1,w2,b1,b2,b3,b4,b5,b6,b7,b8)

#else // !_MIDL_USE_GUIDDEF_

#ifndef __IID_DEFINED__
#define __IID_DEFINED__

typedef struct _IID
{
    unsigned long x;
    unsigned short s1;
    unsigned short s2;
    unsigned char  c[8];
} IID;

#endif // __IID_DEFINED__

#ifndef CLSID_DEFINED
#define CLSID_DEFINED
typedef IID CLSID;
#endif // CLSID_DEFINED

#define
MIDL_DEFINE_GUID(type,name,l,w1,w2,b1,b2,b3,b4,b5,b6,
b7,b8) \
        const type name =
{l,w1,w2,{b1,b2,b3,b4,b5,b6,b7,b8}}

#endif !_MIDL_USE_GUIDDEF_

MIDL_DEFINE_GUID(IID,
LIBID_TPCCLib,0x122A3117,0x2520,0x11D3,0xBA,0x71,0x00
,0xC0,0x4F,0xBF,0xE0,0x8B);


MIDL_DEFINE_GUID(CLSID,
CLSID_TPCC,0x122A3128,0x2520,0x11D3,0xBA,0x71,0x00,0x
C0,0x4F,0xBF,0xE0,0x8B);


MIDL_DEFINE_GUID(CLSID,
CLSID_NewOrder,0x975BAABF,0x84A7,0x11D2,0xBA,0x47,0x0
0,0xC0,0x4F,0xBF,0xE0,0x8B);


MIDL_DEFINE_GUID(CLSID,
CLSID_OrderStatus,0x266836AD,0xA50D,0x11D2,0xBA,0x4E,
0x00,0xC0,0x4F,0xBF,0xE0,0x8B);


MIDL_DEFINE_GUID(CLSID,
CLSID_Payment,0xCD02F7EF,0xA4FA,0x11D2,0xBA,0x4E,0x00
,0xC0,0x4F,0xBF,0xE0,0x8B);


MIDL_DEFINE_GUID(CLSID,
CLSID_StockLevel,0x2668369E,0xA50D,0x11D2,0xBA,0x4E,0
x00,0xC0,0x4F,0xBF,0xE0,0x8B);

#undef MIDL_DEFINE_GUID

#ifdef __cplusplus
}
#endif



#endif /* defined(_M_IA64) || defined(_M_AXP64)*/
```

tpcc_com_all_i.c

```
#pragma warning( disable: 4049 )  /* more than 64k
source lines */

/* this ALWAYS GENERATED file contains the IIDs and
CLSIDs */

/* link this file in with the server and any clients
*/


 /* File created by MIDL compiler version 5.03.0280
*/
/* at Thu Dec 13 23:13:14 2001
 */

/* Compiler settings for .\src\tpcc_com_all.idl:
    Oicf (OptLev=i2), W1, Zp8, env=Win32 (32b run),
ms_ext, c_ext
    error checks: allocation ref bounds_check enum
stub_data
    VC __declspec() decoration level:
         __declspec(uuid()), __declspec(selectany),
__declspec(novtable)
         DECLSPEC_UUID(), MIDL_INTERFACE()
*/
//@@MIDL_FILE_HEADING(  )

#if !defined(_M_IA64) && !defined(_M_AXP64)

#ifdef __cplusplus
extern "C"{
#endif


#include <rpc.h>
#include <rpcndr.h>

#ifdef _MIDL_USE_GUIDDEF_

#ifndef INITGUID
#define INITGUID
#include <guiddef.h>
#undef INITGUID
#else
#include <guiddef.h>
#endif

#define
MIDL_DEFINE_GUID(type,name,l,w1,w2,b1,b2,b3,b4,b5,b6,
b7,b8) \

DEFINE_GUID(name,l,w1,w2,b1,b2,b3,b4,b5,b6,b7,b8)

#else // !_MIDL_USE_GUIDDEF_

#ifndef __IID_DEFINED__
#define __IID_DEFINED__

typedef struct _IID
{
    unsigned long x;
    unsigned short s1;
    unsigned short s2;
    unsigned char  c[8];
} IID;

#endif // __IID_DEFINED__

#ifndef CLSID_DEFINED
#define CLSID_DEFINED
typedef IID CLSID;
#endif // CLSID_DEFINED

#define
MIDL_DEFINE_GUID(type,name,l,w1,w2,b1,b2,b3,b4,b5,b6,
b7,b8) \
        const type name =
{l,w1,w2,{b1,b2,b3,b4,b5,b6,b7,b8}}
```


©2005 Hewlett-Packard Company. All rights reserved.

```
#endif !_MIDL_USE_GUIDDEF_

MIDL_DEFINE_GUID(IID,
LIBID_TPCCLib,0x122A3117,0x2520,0x11D3,0xBA,0x71,0x00
,0xC0,0x4F,0xBF,0xE0,0x8B);


MIDL_DEFINE_GUID(CLSID,
CLSID_TPCC,0x122A3128,0x2520,0x11D3,0xBA,0x71,0x00,0x
C0,0x4F,0xBF,0xE0,0x8B);


MIDL_DEFINE_GUID(CLSID,
CLSID_NewOrder,0x975BAABF,0x84A7,0x11D2,0xBA,0x47,0x0
0,0xC0,0x4F,0xBF,0xE0,0x8B);


MIDL_DEFINE_GUID(CLSID,
CLSID_OrderStatus,0x266836AD,0xA50D,0x11D2,0xBA,0x4E,
0x00,0xC0,0x4F,0xBF,0xE0,0x8B);


MIDL_DEFINE_GUID(CLSID,
CLSID_Payment,0xCD02F7EF,0xA4FA,0x11D2,0xBA,0x4E,0x00
,0xC0,0x4F,0xBF,0xE0,0x8B);


MIDL_DEFINE_GUID(CLSID,
CLSID_StockLevel,0x2668369E,0xA50D,0x11D2,0xBA,0x4E,0
x00,0xC0,0x4F,0xBF,0xE0,0x8B);

#undef MIDL_DEFINE_GUID

#ifdef __cplusplus
}
#endif



#endif /* !defined(_M_IA64) && !defined(_M_AXP64)*/


#pragma warning( disable: 4049 )  /* more than 64k
source lines */

/* this ALWAYS GENERATED file contains the IIDs and
CLSIDs */

/* link this file in with the server and any clients
*/


 /* File created by MIDL compiler version 5.03.0280
*/
/* at Thu Dec 13 23:13:14 2001
 */
/* Compiler settings for .\src\tpcc_com_all.idl:
    Oicf (OptLev=i2), W1, Zp8, env=Win64 (32b
run,appending), ms_ext, c_ext, robust
    error checks: allocation ref bounds_check enum
stub_data
    VC __declspec() decoration level:
         __declspec(uuid()), __declspec(selectany),
__declspec(novtable)
         DECLSPEC_UUID(), MIDL_INTERFACE()
*/
//@@MIDL_FILE_HEADING(  )

#if defined(_M_IA64) || defined(_M_AXP64)

#ifdef __cplusplus
extern "C"{
#endif


#include <rpc.h>
#include <rpcndr.h>

#ifdef _MIDL_USE_GUIDDEF_

#ifndef INITGUID
#define INITGUID
#include <guiddef.h>
#undef INITGUID
#else
#include <guiddef.h>
#endif

#define
MIDL_DEFINE_GUID(type,name,l,w1,w2,b1,b2,b3,b4,b5,b6,
b7,b8) \

DEFINE_GUID(name,l,w1,w2,b1,b2,b3,b4,b5,b6,b7,b8)

#else // !_MIDL_USE_GUIDDEF_

#ifndef __IID_DEFINED__
#define __IID_DEFINED__

typedef struct _IID
{
    unsigned long x;
    unsigned short s1;
    unsigned short s2;
    unsigned char  c[8];
} IID;

#endif // __IID_DEFINED__

#ifndef CLSID_DEFINED
#define CLSID_DEFINED
typedef IID CLSID;
#endif // CLSID_DEFINED

#define
MIDL_DEFINE_GUID(type,name,l,w1,w2,b1,b2,b3,b4,b5,b6,
b7,b8) \
        const type name =
{l,w1,w2,{b1,b2,b3,b4,b5,b6,b7,b8}}

#endif !_MIDL_USE_GUIDDEF_

MIDL_DEFINE_GUID(IID,
LIBID_TPCCLib,0x122A3117,0x2520,0x11D3,0xBA,0x71,0x00
,0xC0,0x4F,0xBF,0xE0,0x8B);


MIDL_DEFINE_GUID(CLSID,
CLSID_TPCC,0x122A3128,0x2520,0x11D3,0xBA,0x71,0x00,0x
C0,0x4F,0xBF,0xE0,0x8B);


MIDL_DEFINE_GUID(CLSID,
CLSID_NewOrder,0x975BAABF,0x84A7,0x11D2,0xBA,0x47,0x0
0,0xC0,0x4F,0xBF,0xE0,0x8B);


MIDL_DEFINE_GUID(CLSID,
CLSID_OrderStatus,0x266836AD,0xA50D,0x11D2,0xBA,0x4E,
0x00,0xC0,0x4F,0xBF,0xE0,0x8B);


MIDL_DEFINE_GUID(CLSID,
CLSID_Payment,0xCD02F7EF,0xA4FA,0x11D2,0xBA,0x4E,0x00
,0xC0,0x4F,0xBF,0xE0,0x8B);


MIDL_DEFINE_GUID(CLSID,
CLSID_StockLevel,0x2668369E,0xA50D,0x11D2,0xBA,0x4E,0
x00,0xC0,0x4F,0xBF,0xE0,0x8B);

#undef MIDL_DEFINE_GUID

#ifdef __cplusplus
}
#endif



#endif /* defined(_M_IA64) || defined(_M_AXP64)*/
```

tpcc_com_all.h

```
#pragma warning( disable: 4049 )  /* more than 64k
source lines */

/* this ALWAYS GENERATED file contains the
definitions for the interfaces */


 /* File created by MIDL compiler version 5.03.0280
*/
/* at Thu Dec 13 23:13:14 2001
 */
/* Compiler settings for .\src\tpcc_com_all.idl:
    Oicf (OptLev=i2), W1, Zp8, env=Win32 (32b run),
ms_ext, c_ext
    error checks: allocation ref bounds_check enum
stub_data
    VC __declspec() decoration level:
         __declspec(uuid()), __declspec(selectany),
__declspec(novtable)
         DECLSPEC_UUID(), MIDL_INTERFACE()
```


©2005 Hewlett-Packard Company. All rights reserved.

```
*/
//@@MIDL_FILE_HEADING(  )


/* verify that the <rpcndr.h> version is high enough
to compile this file*/
#ifndef __REQUIRED_RPCNDR_H_VERSION__
#define __REQUIRED_RPCNDR_H_VERSION__ 440
#endif

#include "rpc.h"
#include "rpcndr.h"

#ifndef __tpcc_com_all_h__
#define __tpcc_com_all_h__

/* Forward Declarations */

#ifndef __TPCC_FWD_DEFINED__
#define __TPCC_FWD_DEFINED__

#ifdef __cplusplus
typedef class TPCC TPCC;
#else
typedef struct TPCC TPCC;
#endif /* __cplusplus */

#endif    /* __TPCC_FWD_DEFINED__ */


#ifndef __NewOrder_FWD_DEFINED__
#define __NewOrder_FWD_DEFINED__

#ifdef __cplusplus
typedef class NewOrder NewOrder;
#else
typedef struct NewOrder NewOrder;
#endif /* __cplusplus */

#endif    /* __NewOrder_FWD_DEFINED__ */


#ifndef __OrderStatus_FWD_DEFINED__
#define __OrderStatus_FWD_DEFINED__

#ifdef __cplusplus
typedef class OrderStatus OrderStatus;
#else
typedef struct OrderStatus OrderStatus;
#endif /* __cplusplus */

#endif    /* __OrderStatus_FWD_DEFINED__ */


#ifndef __Payment_FWD_DEFINED__
#define __Payment_FWD_DEFINED__

#ifdef __cplusplus
typedef class Payment Payment;
#else
typedef struct Payment Payment;
#endif /* __cplusplus */

#endif    /* __Payment_FWD_DEFINED__ */


#ifndef __StockLevel_FWD_DEFINED__
#define __StockLevel_FWD_DEFINED__

#ifdef __cplusplus
typedef class StockLevel StockLevel;
#else
typedef struct StockLevel StockLevel;
#endif /* __cplusplus */

#endif    /* __StockLevel_FWD_DEFINED__ */


/* header files for imported files */
#include "oaidl.h"
#include "ocidl.h"
#include "tpcc_com_ps.h"

#ifdef __cplusplus
extern "C"{
#endif

void __RPC_FAR * __RPC_USER
MIDL_user_allocate(size_t);
void __RPC_USER MIDL_user_free( void __RPC_FAR * );

/* interface __MIDL_itf_tpcc_com_all_0000 */
/* [local] */









extern RPC_IF_HANDLE
__MIDL_itf_tpcc_com_all_0000_v0_0_c_ifspec;
extern RPC_IF_HANDLE
__MIDL_itf_tpcc_com_all_0000_v0_0_s_ifspec;


#ifndef __TPCCLib_LIBRARY_DEFINED__
#define __TPCCLib_LIBRARY_DEFINED__

/* library TPCCLib */
/* [helpstring][version][uuid] */


EXTERN_C const IID LIBID_TPCCLib;

EXTERN_C const CLSID CLSID_TPCC;

#ifdef __cplusplus

class DECLSPEC_UUID("122A3128-2520-11D3-BA71-
00C04FBFE08B")
TPCC;
#endif

EXTERN_C const CLSID CLSID_NewOrder;

#ifdef __cplusplus

class DECLSPEC_UUID("975BAABF-84A7-11D2-BA47-
00C04FBFE08B")
NewOrder;
#endif

EXTERN_C const CLSID CLSID_OrderStatus;

#ifdef __cplusplus

class DECLSPEC_UUID("266836AD-A50D-11D2-BA4E-
00C04FBFE08B")
OrderStatus;
#endif

EXTERN_C const CLSID CLSID_Payment;

#ifdef __cplusplus

class DECLSPEC_UUID("CD02F7EF-A4FA-11D2-BA4E-
00C04FBFE08B")
Payment;
#endif

EXTERN_C const CLSID CLSID_StockLevel;

#ifdef __cplusplus

class DECLSPEC_UUID("2668369E-A50D-11D2-BA4E-
00C04FBFE08B")
StockLevel;
#endif
#endif /* __TPCCLib_LIBRARY_DEFINED__ */

/* Additional Prototypes for ALL interfaces */

/* end of Additional Prototypes */

#ifdef __cplusplus
}
#endif

#endif
```

tpcc_com_all_i.c

```
#pragma warning( disable: 4049 )  /* more than 64k
source lines */

/* this ALWAYS GENERATED file contains the IIDs and
CLSIDs */

/* link this file in with the server and any clients
*/
```


©2005 Hewlett-Packard Company. All rights reserved.

```
 /* File created by MIDL compiler version 5.03.0280
*/
/* at Thu Dec 13 23:13:14 2001
 */
/* Compiler settings for .\src\tpcc_com_all.idl:
    Oicf (OptLev=i2), W1, Zp8, env=Win32 (32b run),
ms_ext, c_ext
    error checks: allocation ref bounds_check enum
stub_data
    VC __declspec() decoration level:
         __declspec(uuid()), __declspec(selectany),
__declspec(novtable)
         DECLSPEC_UUID(), MIDL_INTERFACE()
*/
//@@MIDL_FILE_HEADING(  )

#if !defined(_M_IA64) && !defined(_M_AXP64)

#ifdef __cplusplus
extern "C"{
#endif


#include <rpc.h>
#include <rpcndr.h>

#ifdef _MIDL_USE_GUIDDEF_

#ifndef INITGUID
#define INITGUID
#include <guiddef.h>
#undef INITGUID
#else
#include <guiddef.h>
#endif

#define
MIDL_DEFINE_GUID(type,name,l,w1,w2,b1,b2,b3,b4,b5,b6,
b7,b8) \

DEFINE_GUID(name,l,w1,w2,b1,b2,b3,b4,b5,b6,b7,b8)

#else // !_MIDL_USE_GUIDDEF_

#ifndef __IID_DEFINED__
#define __IID_DEFINED__

typedef struct _IID
{
    unsigned long x;
    unsigned short s1;
    unsigned short s2;
    unsigned char  c[8];
} IID;

#endif // __IID_DEFINED__

#ifndef CLSID_DEFINED
#define CLSID_DEFINED
typedef IID CLSID;
#endif // CLSID_DEFINED

#define
MIDL_DEFINE_GUID(type,name,l,w1,w2,b1,b2,b3,b4,b5,b6,
b7,b8) \
        const type name =
{l,w1,w2,{b1,b2,b3,b4,b5,b6,b7,b8}}

#endif !_MIDL_USE_GUIDDEF_

MIDL_DEFINE_GUID(IID,
LIBID_TPCCLib,0x122A3117,0x2520,0x11D3,0xBA,0x71,0x00
,0xC0,0x4F,0xBF,0xE0,0x8B);


MIDL_DEFINE_GUID(CLSID,
CLSID_TPCC,0x122A3128,0x2520,0x11D3,0xBA,0x71,0x00,0x
C0,0x4F,0xBF,0xE0,0x8B);


MIDL_DEFINE_GUID(CLSID,
CLSID_NewOrder,0x975BAABF,0x84A7,0x11D2,0xBA,0x47,0x0
0,0xC0,0x4F,0xBF,0xE0,0x8B);


MIDL_DEFINE_GUID(CLSID,
CLSID_OrderStatus,0x266836AD,0xA50D,0x11D2,0xBA,0x4E,
0x00,0xC0,0x4F,0xBF,0xE0,0x8B);


MIDL_DEFINE_GUID(CLSID,
CLSID_Payment,0xCD02F7EF,0xA4FA,0x11D2,0xBA,0x4E,0x00
,0xC0,0x4F,0xBF,0xE0,0x8B);


MIDL_DEFINE_GUID(CLSID,
CLSID_StockLevel,0x2668369E,0xA50D,0x11D2,0xBA,0x4E,0
x00,0xC0,0x4F,0xBF,0xE0,0x8B);

#undef MIDL_DEFINE_GUID

#ifdef __cplusplus
}
#endif



#endif /* !defined(_M_IA64) && !defined(_M_AXP64)*/


#pragma warning( disable: 4049 )  /* more than 64k
source lines */

/* this ALWAYS GENERATED file contains the IIDs and
CLSIDs */

/* link this file in with the server and any clients
*/


 /* File created by MIDL compiler version 5.03.0280
*/
/* at Thu Dec 13 23:13:14 2001
 */
/* Compiler settings for .\src\tpcc_com_all.idl:
    Oicf (OptLev=i2), W1, Zp8, env=Win64 (32b
run,appending), ms_ext, c_ext, robust
    error checks: allocation ref bounds_check enum
stub_data
    VC __declspec() decoration level:
         __declspec(uuid()), __declspec(selectany),
__declspec(novtable)
         DECLSPEC_UUID(), MIDL_INTERFACE()
*/
//@@MIDL_FILE_HEADING(  )

#if defined(_M_IA64) || defined(_M_AXP64)

#ifdef __cplusplus
extern "C"{
#endif


#include <rpc.h>
#include <rpcndr.h>

#ifdef _MIDL_USE_GUIDDEF_

#ifndef INITGUID
#define INITGUID
#include <guiddef.h>
#undef INITGUID
#else
#include <guiddef.h>
#endif

#define
MIDL_DEFINE_GUID(type,name,l,w1,w2,b1,b2,b3,b4,b5,b6,
b7,b8) \

DEFINE_GUID(name,l,w1,w2,b1,b2,b3,b4,b5,b6,b7,b8)

#else // !_MIDL_USE_GUIDDEF_

#ifndef __IID_DEFINED__
#define __IID_DEFINED__

typedef struct _IID
{
    unsigned long x;
    unsigned short s1;
    unsigned short s2;
    unsigned char  c[8];
} IID;

#endif // __IID_DEFINED__

#ifndef CLSID_DEFINED
#define CLSID_DEFINED
typedef IID CLSID;
#endif // CLSID_DEFINED

#define
MIDL_DEFINE_GUID(type,name,l,w1,w2,b1,b2,b3,b4,b5,b6,
b7,b8) \
        const type name =
{l,w1,w2,{b1,b2,b3,b4,b5,b6,b7,b8}}
```


©2005 Hewlett-Packard Company. All rights reserved.

```
#endif !_MIDL_USE_GUIDDEF_

MIDL_DEFINE_GUID(IID,
LIBID_TPCCLib,0x122A3117,0x2520,0x11D3,0xBA,0x71,0x00
,0xC0,0x4F,0xBF,0xE0,0x8B);


MIDL_DEFINE_GUID(CLSID,
CLSID_TPCC,0x122A3128,0x2520,0x11D3,0xBA,0x71,0x00,0x
C0,0x4F,0xBF,0xE0,0x8B);


MIDL_DEFINE_GUID(CLSID,
CLSID_NewOrder,0x975BAABF,0x84A7,0x11D2,0xBA,0x47,0x0
0,0xC0,0x4F,0xBF,0xE0,0x8B);


MIDL_DEFINE_GUID(CLSID,
CLSID_OrderStatus,0x266836AD,0xA50D,0x11D2,0xBA,0x4E,
0x00,0xC0,0x4F,0xBF,0xE0,0x8B);


MIDL_DEFINE_GUID(CLSID,
CLSID_Payment,0xCD02F7EF,0xA4FA,0x11D2,0xBA,0x4E,0x00
,0xC0,0x4F,0xBF,0xE0,0x8B);


MIDL_DEFINE_GUID(CLSID,
CLSID_StockLevel,0x2668369E,0xA50D,0x11D2,0xBA,0x4E,0
x00,0xC0,0x4F,0xBF,0xE0,0x8B);

#undef MIDL_DEFINE_GUID

#ifdef __cplusplus
}
#endif



#endif /* defined(_M_IA64) || defined(_M_AXP64)*/
```

tpcc_com_all.rc

```
//Microsoft Developer Studio generated resource
script.
//
#include "resource.h"

#define APSTUDIO_READONLY_SYMBOLS
/////////////////////////////////////////////////////
///////////////////////
//
// Generated from the TEXTINCLUDE 2 resource.
//
#include "winres.h"

/////////////////////////////////////////////////////
///////////////////////
#undef APSTUDIO_READONLY_SYMBOLS

/////////////////////////////////////////////////////
///////////////////////
// English (U.S.) resources

#if !defined(AFX_RESOURCE_DLL) ||
defined(AFX_TARG_ENU)
#ifdef _WIN32
LANGUAGE LANG_ENGLISH, SUBLANG_ENGLISH_US
#pragma code_page(1252)
#endif //_WIN32

#ifdef APSTUDIO_INVOKED
/////////////////////////////////////////////////////
///////////////////////
//
// TEXTINCLUDE
//

1 TEXTINCLUDE DISCARDABLE
BEGIN
    "resource.h\0"
END

2 TEXTINCLUDE DISCARDABLE
BEGIN
    "#include ""winres.h""\r\n"
    "\0"
END

3 TEXTINCLUDE DISCARDABLE
BEGIN
    "1 TYPELIB ""tpcc_com_all.tlb""\r\n"
    "\0"
END

#endif    // APSTUDIO_INVOKED


#ifndef _MAC
/////////////////////////////////////////////////////
///////////////////////
//
// Version
//

VS_VERSION_INFO VERSIONINFO
 FILEVERSION 1,0,0,1
 PRODUCTVERSION 1,0,0,1
 FILEFLAGSMASK 0x3fL
#ifdef _DEBUG
 FILEFLAGS 0x1L
#else
 FILEFLAGS 0x0L
#endif
 FILEOS 0x4L
 FILETYPE 0x2L
 FILESUBTYPE 0x0L
BEGIN
    BLOCK "StringFileInfo"
    BEGIN
        BLOCK "040904B0"
        BEGIN
            VALUE "CompanyName", "\0"
            VALUE "FileDescription", "tpcc_com_all
Module\0"
            VALUE "FileVersion", "1, 0, 0, 1\0"
            VALUE "InternalName", "TPCCNEWORDER\0"
            VALUE "LegalCopyright", "Copyright
1997\0"
            VALUE "OriginalFilename",
"tpcc_com_all.DLL\0"
            VALUE "ProductName", "tpcc_com_all
Module\0"
            VALUE "ProductVersion", "1, 0, 0, 1\0"
            VALUE "OLESelfRegister", "\0"
        END
    END
    BLOCK "VarFileInfo"
    BEGIN
        VALUE "Translation", 0x409, 1200
    END
END

#endif    // !_MAC


/////////////////////////////////////////////////////
///////////////////////
//
// REGISTRY
//

IDR_TPCC                REGISTRY DISCARDABLE
"tpcc_com_all.rgs"
IDR_NEWORDER            REGISTRY DISCARDABLE
"tpcc_com_no.rgs"
IDR_ORDERSTATUS         REGISTRY DISCARDABLE
"tpcc_com_os.rgs"
IDR_PAYMENT             REGISTRY DISCARDABLE
"tpcc_com_pay.rgs"
IDR_STOCKLEVEL          REGISTRY DISCARDABLE
"tpcc_com_sl.rgs"

/////////////////////////////////////////////////////
///////////////////////
//
// String Table
//

STRINGTABLE DISCARDABLE
BEGIN
    IDS_PROJNAME            "tpcc_com_all"
END

#endif    // English (U.S.) resources
/////////////////////////////////////////////////////
///////////////////////



#ifndef APSTUDIO_INVOKED
/////////////////////////////////////////////////////
///////////////////////
//
// Generated from the TEXTINCLUDE 3 resource.
```


©2005 Hewlett-Packard Company. All rights reserved.

```
//
1 TYPELIB "tpcc_com_all.tlb"

/////////////////////////////////////////////////////
///////////////////////
#endif    // not APSTUDIO_INVOKED
```

tpcc_com_all_i.c

```
#pragma warning( disable: 4049 )  /* more than 64k
source lines */

/* this ALWAYS GENERATED file contains the IIDs and
CLSIDs */

/* link this file in with the server and any clients
*/


 /* File created by MIDL compiler version 5.03.0280
*/
/* at Thu Dec 13 23:13:14 2001
 */
/* Compiler settings for .\src\tpcc_com_all.idl:
    Oicf (OptLev=i2), W1, Zp8, env=Win32 (32b run),
ms_ext, c_ext
    error checks: allocation ref bounds_check enum
stub_data
    VC __declspec() decoration level:
         __declspec(uuid()), __declspec(selectany),
__declspec(novtable)
         DECLSPEC_UUID(), MIDL_INTERFACE()
*/
//@@MIDL_FILE_HEADING(  )

#if !defined(_M_IA64) && !defined(_M_AXP64)

#ifdef __cplusplus
extern "C"{
#endif


#include <rpc.h>
#include <rpcndr.h>

#ifdef _MIDL_USE_GUIDDEF_

#ifndef INITGUID
#define INITGUID
#include <guiddef.h>
#undef INITGUID
#else
#include <guiddef.h>
#endif

#define
MIDL_DEFINE_GUID(type,name,l,w1,w2,b1,b2,b3,b4,b5,b6,
b7,b8) \

DEFINE_GUID(name,l,w1,w2,b1,b2,b3,b4,b5,b6,b7,b8)

#else // !_MIDL_USE_GUIDDEF_

#ifndef __IID_DEFINED__
#define __IID_DEFINED__

typedef struct _IID
{
    unsigned long x;
    unsigned short s1;
    unsigned short s2;
    unsigned char  c[8];
} IID;

#endif // __IID_DEFINED__

#ifndef CLSID_DEFINED
#define CLSID_DEFINED
typedef IID CLSID;
#endif // CLSID_DEFINED

#define
MIDL_DEFINE_GUID(type,name,l,w1,w2,b1,b2,b3,b4,b5,b6,
b7,b8) \
        const type name =
{l,w1,w2,{b1,b2,b3,b4,b5,b6,b7,b8}}

#endif !_MIDL_USE_GUIDDEF_

MIDL_DEFINE_GUID(IID,
LIBID_TPCCLib,0x122A3117,0x2520,0x11D3,0xBA,0x71,0x00
,0xC0,0x4F,0xBF,0xE0,0x8B);


MIDL_DEFINE_GUID(CLSID,
CLSID_TPCC,0x122A3128,0x2520,0x11D3,0xBA,0x71,0x00,0x
C0,0x4F,0xBF,0xE0,0x8B);


MIDL_DEFINE_GUID(CLSID,
CLSID_NewOrder,0x975BAABF,0x84A7,0x11D2,0xBA,0x47,0x0
0,0xC0,0x4F,0xBF,0xE0,0x8B);


MIDL_DEFINE_GUID(CLSID,
CLSID_OrderStatus,0x266836AD,0xA50D,0x11D2,0xBA,0x4E,
0x00,0xC0,0x4F,0xBF,0xE0,0x8B);


MIDL_DEFINE_GUID(CLSID,
CLSID_Payment,0xCD02F7EF,0xA4FA,0x11D2,0xBA,0x4E,0x00
,0xC0,0x4F,0xBF,0xE0,0x8B);


MIDL_DEFINE_GUID(CLSID,
CLSID_StockLevel,0x2668369E,0xA50D,0x11D2,0xBA,0x4E,0
x00,0xC0,0x4F,0xBF,0xE0,0x8B);

#undef MIDL_DEFINE_GUID

#ifdef __cplusplus
}
#endif


#endif /* !defined(_M_IA64) && !defined(_M_AXP64)*/


#pragma warning( disable: 4049 )  /* more than 64k
source lines */

/* this ALWAYS GENERATED file contains the IIDs and
CLSIDs */

/* link this file in with the server and any clients
*/


 /* File created by MIDL compiler version 5.03.0280
*/
/* at Thu Dec 13 23:13:14 2001
 */
/* Compiler settings for .\src\tpcc_com_all.idl:
    Oicf (OptLev=i2), W1, Zp8, env=Win64 (32b
run,appending), ms_ext, c_ext, robust
    error checks: allocation ref bounds_check enum
stub_data
    VC __declspec() decoration level:
         __declspec(uuid()), __declspec(selectany),
__declspec(novtable)
         DECLSPEC_UUID(), MIDL_INTERFACE()
*/
//@@MIDL_FILE_HEADING(  )

#if defined(_M_IA64) || defined(_M_AXP64)

#ifdef __cplusplus
extern "C"{
#endif


#include <rpc.h>
#include <rpcndr.h>

#ifdef _MIDL_USE_GUIDDEF_

#ifndef INITGUID
#define INITGUID
#include <guiddef.h>
#undef INITGUID
#else
#include <guiddef.h>
#endif

#define
MIDL_DEFINE_GUID(type,name,l,w1,w2,b1,b2,b3,b4,b5,b6,
b7,b8) \

DEFINE_GUID(name,l,w1,w2,b1,b2,b3,b4,b5,b6,b7,b8)

#else // !_MIDL_USE_GUIDDEF_

#ifndef __IID_DEFINED__
```


©2005 Hewlett-Packard Company. All rights reserved.

```
#define __IID_DEFINED__

typedef struct _IID
{
    unsigned long x;
    unsigned short s1;
    unsigned short s2;
    unsigned char  c[8];
} IID;

#endif // __IID_DEFINED__

#ifndef CLSID_DEFINED
#define CLSID_DEFINED
typedef IID CLSID;
#endif // CLSID_DEFINED

#define
MIDL_DEFINE_GUID(type,name,l,w1,w2,b1,b2,b3,b4,b5,b6,
b7,b8) \
        const type name =
{l,w1,w2,{b1,b2,b3,b4,b5,b6,b7,b8}}

#endif !_MIDL_USE_GUIDDEF_

MIDL_DEFINE_GUID(IID,
LIBID_TPCCLib,0x122A3117,0x2520,0x11D3,0xBA,0x71,0x00
,0xC0,0x4F,0xBF,0xE0,0x8B);


MIDL_DEFINE_GUID(CLSID,
CLSID_TPCC,0x122A3128,0x2520,0x11D3,0xBA,0x71,0x00,0x
C0,0x4F,0xBF,0xE0,0x8B);


MIDL_DEFINE_GUID(CLSID,
CLSID_NewOrder,0x975BAABF,0x84A7,0x11D2,0xBA,0x47,0x0
0,0xC0,0x4F,0xBF,0xE0,0x8B);


MIDL_DEFINE_GUID(CLSID,
CLSID_OrderStatus,0x266836AD,0xA50D,0x11D2,0xBA,0x4E,
0x00,0xC0,0x4F,0xBF,0xE0,0x8B);


MIDL_DEFINE_GUID(CLSID,
CLSID_Payment,0xCD02F7EF,0xA4FA,0x11D2,0xBA,0x4E,0x00
,0xC0,0x4F,0xBF,0xE0,0x8B);


MIDL_DEFINE_GUID(CLSID,
CLSID_StockLevel,0x2668369E,0xA50D,0x11D2,0xBA,0x4E,0
x00,0xC0,0x4F,0xBF,0xE0,0x8B);

#undef MIDL_DEFINE_GUID

#ifdef __cplusplus
}
#endif


#endif /* defined(_M_IA64) || defined(_M_AXP64)*/
```

tpcc_com_all_i.c

```
#pragma warning( disable: 4049 )  /* more than 64k
source lines */

/* this ALWAYS GENERATED file contains the IIDs and
CLSIDs */

/* link this file in with the server and any clients
*/


 /* File created by MIDL compiler version 5.03.0280
*/
/* at Thu Dec 13 23:13:14 2001
 */
/* Compiler settings for .\src\tpcc_com_all.idl:
    Oicf (OptLev=i2), W1, Zp8, env=Win32 (32b run),
ms_ext, c_ext
    error checks: allocation ref bounds_check enum
stub_data
    VC __declspec() decoration level:
         __declspec(uuid()), __declspec(selectany),
__declspec(novtable)
         DECLSPEC_UUID(), MIDL_INTERFACE()
*/
//@@MIDL_FILE_HEADING(  )

#if !defined(_M_IA64) && !defined(_M_AXP64)

#ifdef __cplusplus
extern "C"{
#endif


#include <rpc.h>
#include <rpcndr.h>

#ifdef _MIDL_USE_GUIDDEF_

#ifndef INITGUID
#define INITGUID
#include <guiddef.h>
#undef INITGUID
#else
#include <guiddef.h>
#endif

#define
MIDL_DEFINE_GUID(type,name,l,w1,w2,b1,b2,b3,b4,b5,b6,
b7,b8) \

DEFINE_GUID(name,l,w1,w2,b1,b2,b3,b4,b5,b6,b7,b8)

#else // !_MIDL_USE_GUIDDEF_

#ifndef __IID_DEFINED__
```

```
#define __IID_DEFINED__

typedef struct _IID
{
    unsigned long x;
    unsigned short s1;
    unsigned short s2;
    unsigned char  c[8];
} IID;

#endif // __IID_DEFINED__

#ifndef CLSID_DEFINED
#define CLSID_DEFINED
typedef IID CLSID;
#endif // CLSID_DEFINED

#define
MIDL_DEFINE_GUID(type,name,l,w1,w2,b1,b2,b3,b4,b5,b6,
b7,b8) \
        const type name =
{l,w1,w2,{b1,b2,b3,b4,b5,b6,b7,b8}}

#endif !_MIDL_USE_GUIDDEF_

MIDL_DEFINE_GUID(IID,
LIBID_TPCCLib,0x122A3117,0x2520,0x11D3,0xBA,0x71,0x00
,0xC0,0x4F,0xBF,0xE0,0x8B);


MIDL_DEFINE_GUID(CLSID,
CLSID_TPCC,0x122A3128,0x2520,0x11D3,0xBA,0x71,0x00,0x
C0,0x4F,0xBF,0xE0,0x8B);


MIDL_DEFINE_GUID(CLSID,
CLSID_NewOrder,0x975BAABF,0x84A7,0x11D2,0xBA,0x47,0x0
0,0xC0,0x4F,0xBF,0xE0,0x8B);


MIDL_DEFINE_GUID(CLSID,
CLSID_OrderStatus,0x266836AD,0xA50D,0x11D2,0xBA,0x4E,
0x00,0xC0,0x4F,0xBF,0xE0,0x8B);


MIDL_DEFINE_GUID(CLSID,
CLSID_Payment,0xCD02F7EF,0xA4FA,0x11D2,0xBA,0x4E,0x00
,0xC0,0x4F,0xBF,0xE0,0x8B);


MIDL_DEFINE_GUID(CLSID,
CLSID_StockLevel,0x2668369E,0xA50D,0x11D2,0xBA,0x4E,0
x00,0xC0,0x4F,0xBF,0xE0,0x8B);

#undef MIDL_DEFINE_GUID

#ifdef __cplusplus
}
#endif


#endif /* !defined(_M_IA64) && !defined(_M_AXP64)*/
```


©2005 Hewlett-Packard Company. All rights reserved.

```
#pragma warning( disable: 4049 )  /* more than 64k
source lines */

/* this ALWAYS GENERATED file contains the IIDs and
CLSIDs */

/* link this file in with the server and any clients
*/


 /* File created by MIDL compiler version 5.03.0280
*/
/* at Thu Dec 13 23:13:14 2001
 */
/* Compiler settings for .\src\tpcc_com_all.idl:
    Oicf (OptLev=i2), W1, Zp8, env=Win64 (32b
run,appending), ms_ext, c_ext, robust
    error checks: allocation ref bounds_check enum
stub_data
    VC __declspec() decoration level:
         __declspec(uuid()), __declspec(selectany),
__declspec(novtable)
         DECLSPEC_UUID(), MIDL_INTERFACE()
*/
//@@MIDL_FILE_HEADING(  )

#if defined(_M_IA64) || defined(_M_AXP64)

#ifdef __cplusplus
extern "C"{
#endif


#include <rpc.h>
#include <rpcndr.h>

#ifdef _MIDL_USE_GUIDDEF_

#ifndef INITGUID
#define INITGUID
#include <guiddef.h>
#undef INITGUID
#else
#include <guiddef.h>
#endif

#define
MIDL_DEFINE_GUID(type,name,l,w1,w2,b1,b2,b3,b4,b5,b6,
b7,b8) \

DEFINE_GUID(name,l,w1,w2,b1,b2,b3,b4,b5,b6,b7,b8)

#else // !_MIDL_USE_GUIDDEF_

#ifndef __IID_DEFINED__
#define __IID_DEFINED__

typedef struct _IID
{
    unsigned long x;
    unsigned short s1;
    unsigned short s2;
    unsigned char  c[8];
} IID;

#endif // __IID_DEFINED__

#ifndef CLSID_DEFINED
#define CLSID_DEFINED
typedef IID CLSID;
#endif // CLSID_DEFINED

#define
MIDL_DEFINE_GUID(type,name,l,w1,w2,b1,b2,b3,b4,b5,b6,
b7,b8) \
        const type name =
{l,w1,w2,{b1,b2,b3,b4,b5,b6,b7,b8}}

#endif !_MIDL_USE_GUIDDEF_

MIDL_DEFINE_GUID(IID,
LIBID_TPCCLib,0x122A3117,0x2520,0x11D3,0xBA,0x71,0x00
,0xC0,0x4F,0xBF,0xE0,0x8B);


MIDL_DEFINE_GUID(CLSID,
CLSID_TPCC,0x122A3128,0x2520,0x11D3,0xBA,0x71,0x00,0x
C0,0x4F,0xBF,0xE0,0x8B);


MIDL_DEFINE_GUID(CLSID,
CLSID_NewOrder,0x975BAABF,0x84A7,0x11D2,0xBA,0x47,0x0
0,0xC0,0x4F,0xBF,0xE0,0x8B);


MIDL_DEFINE_GUID(CLSID,
CLSID_OrderStatus,0x266836AD,0xA50D,0x11D2,0xBA,0x4E,
0x00,0xC0,0x4F,0xBF,0xE0,0x8B);


MIDL_DEFINE_GUID(CLSID,
CLSID_Payment,0xCD02F7EF,0xA4FA,0x11D2,0xBA,0x4E,0x00
,0xC0,0x4F,0xBF,0xE0,0x8B);


MIDL_DEFINE_GUID(CLSID,
CLSID_StockLevel,0x2668369E,0xA50D,0x11D2,0xBA,0x4E,0
x00,0xC0,0x4F,0xBF,0xE0,0x8B);

#undef MIDL_DEFINE_GUID

#ifdef __cplusplus
}
#endif



#endif /* defined(_M_IA64) || defined(_M_AXP64)*/
```

tpcc_com_no.rgs

```
HKCR
{
          TPCC.NewOrder.1 = s 'NewOrder Class'
          {
                    CLSID = s '{975BAABF-84A7-11D2-
BA47-00C04FBFE08B}'
          }
          TPCC.NewOrder = s 'NewOrder Class'
          {
                    CurVer = s 'TPCC.NewOrder.1'
          }
          NoRemove CLSID
          {
                    ForceRemove {975BAABF-84A7-11D2-
BA47-00C04FBFE08B} = s 'NewOrder Class'
                    {
                              ProgID = s
'TPCC.NewOrder.1'

          VersionIndependentProgID = s
'TPCC.NewOrder'
                              InprocServer32 = s
'%MODULE%'
                              {
                                        val
ThreadingModel = s 'Both'
                              }
                    }
          }
}
```

tpcc_com_os.rgs

```
HKCR
{
          TPCC.OrderStatus.1 = s 'OrderStatus Class'
          {
                    CLSID = s '{266836AD-A50D-11D2-
BA4E-00C04FBFE08B}'
          }
          TPCC.OrderStatus = s 'OrderStatus Class'
          {
                    CurVer = s 'TPCC.OrderStatus.1'
          }
          NoRemove CLSID
          {
                    ForceRemove {266836AD-A50D-11D2-
BA4E-00C04FBFE08B} = s 'OrderStatus Class'
                    {
                              ProgID = s
'TPCC.OrderStatus.1'

          VersionIndependentProgID = s
'TPCC.OrderStatus'
                              InprocServer32 = s
'%MODULE%'
                              {
```


©2005 Hewlett-Packard Company. All rights reserved.

```
                                        val
ThreadingModel = s 'Both'
                                }
                        }
                }
}
```

tpcc_com_pay.rgs

```
HKCR
{
        TPCC.Payment.1 = s 'Payment Class'
        {
                CLSID = s '{CD02F7EF-A4FA-11D2-
BA4E-00C04FBFE08B}'
        }
        TPCC.Payment = s 'Payment Class'
        {
                CurVer = s 'TPCC.Payment.1'
        }
        NoRemove CLSID
        {
                ForceRemove {CD02F7EF-A4FA-11D2-
BA4E-00C04FBFE08B} = s 'Payment Class'
                {
                        ProgID = s
'TPCC.Payment.1'

        VersionIndependentProgID = s 'TPCC.Payment'
                        InprocServer32 = s
'%MODULE%'
                        {
                                        val
ThreadingModel = s 'Both'
                        }
                }
        }
}
```

tpcc_com_ps_p.c

```
#pragma warning( disable: 4049 )  /* more than 64k
source lines */

/* this ALWAYS GENERATED file contains the proxy stub
code */


 /* File created by MIDL compiler version 5.03.0280
*/
/* at Thu Dec 13 23:13:08 2001
 */
/* Compiler settings for .\src\tpcc_com_ps.idl:
    Oicf (OptLev=i2), W1, Zp8, env=Win32 (32b run),
ms_ext, c_ext
    error checks: allocation ref bounds_check enum
stub_data
    VC __declspec() decoration level:
         __declspec(uuid()), __declspec(selectany),
__declspec(novtable)
         DECLSPEC_UUID(), MIDL_INTERFACE()
*/
//@@MIDL_FILE_HEADING(  )

#if !defined(_M_IA64) && !defined(_M_AXP64)
#define USE_STUBLESS_PROXY


/* verify that the <rpcproxy.h> version is high
enough to compile this file*/
#ifndef __REDQ_RPCPROXY_H_VERSION__
#define __REQUIRED_RPCPROXY_H_VERSION__ 440
#endif


#include "rpcproxy.h"
#ifndef __RPCPROXY_H_VERSION__
#error this stub requires an updated version of
<rpcproxy.h>
#endif // __RPCPROXY_H_VERSION__


#include "tpcc_com_ps.h"

#define TYPE_FORMAT_STRING_SIZE   997
#define PROC_FORMAT_STRING_SIZE   193
#define TRANSMIT_AS_TABLE_SIZE    0
#define WIRE_MARSHAL_TABLE_SIZE   1

typedef struct _MIDL_TYPE_FORMAT_STRING
    {
    short          Pad;
    unsigned char  Format[ TYPE_FORMAT_STRING_SIZE ];
    } MIDL_TYPE_FORMAT_STRING;

typedef struct _MIDL_PROC_FORMAT_STRING
    {
    short          Pad;
    unsigned char  Format[ PROC_FORMAT_STRING_SIZE ];
    } MIDL_PROC_FORMAT_STRING;


extern const MIDL_TYPE_FORMAT_STRING
__MIDL_TypeFormatString;
extern const MIDL_PROC_FORMAT_STRING
__MIDL_ProcFormatString;


/* Standard interface: __MIDL_itf_tpcc_com_ps_0000,
ver. 0.0,

GUID={0x00000000,0x0000,0x0000,{0x00,0x00,0x00,0x00,0
x00,0x00,0x00,0x00}} */


/* Object interface: IUnknown, ver. 0.0,

GUID={0x00000000,0x0000,0x0000,{0xC0,0x00,0x00,0x00,0
x00,0x00,0x00,0x46}} */


/* Object interface: ITPCC, ver. 0.0,

GUID={0xFEEE6AA2,0x84B1,0x11d2,{0xBA,0x47,0x00,0xC0,0
x4F,0xBF,0xE0,0x8B}} */


extern const MIDL_STUB_DESC Object_StubDesc;


extern const MIDL_SERVER_INFO ITPCC_ServerInfo;

#pragma code_seg(".orpc")
static const unsigned short
ITPCC_FormatStringOffsetTable[] =
    {
    0,
    34,
    68,
    102,
    136,
    170
    };

static const MIDL_SERVER_INFO ITPCC_ServerInfo =
    {
    &Object_StubDesc,
    0,
    __MIDL_ProcFormatString.Format,
    &ITPCC_FormatStringOffsetTable[-3],
    0,
    0,
    0,
    0
    };

static const MIDL_STUBLESS_PROXY_INFO ITPCC_ProxyInfo
=
    {
    &Object_StubDesc,
    __MIDL_ProcFormatString.Format,
    &ITPCC_FormatStringOffsetTable[-3],
    0,
    0,
    0
    };

CINTERFACE_PROXY_VTABLE(9) _ITPCCProxyVtbl =
{
    &ITPCC_ProxyInfo,
    &IID_ITPCC,
    IUnknown_QueryInterface_Proxy,
    IUnknown_AddRef_Proxy,
    IUnknown_Release_Proxy ,
    (void *)-1 /* ITPCC::NewOrder */ ,
    (void *)-1 /* ITPCC::Payment */ ,
    (void *)-1 /* ITPCC::Delivery */ ,
    (void *)-1 /* ITPCC::StockLevel */ ,
    (void *)-1 /* ITPCC::OrderStatus */ ,
    (void *)-1 /* ITPCC::CallSetComplete */
};

const CInterfaceStubVtbl _ITPCCStubVtbl =
```


©2005 Hewlett-Packard Company. All rights reserved.

```
{
    &IID_ITPCC,
    &ITPCC_ServerInfo,
    9,
    0, /* pure interpreted */
    CStdStubBuffer_METHODS
};

extern const USER_MARSHAL_ROUTINE_QUADRUPLE
UserMarshalRoutines[ WIRE_MARSHAL_TABLE_SIZE ];

static const MIDL_STUB_DESC Object_StubDesc =
    {
    0,
    NdrOleAllocate,
    NdrOleFree,
    0,
    0,
    0,
    0,
    0,
    __MIDL_TypeFormatString.Format,
    1, /* -error bounds_check flag */
    0x20000, /* Ndr library version */
    0,
    0x5030118, /* MIDL Version 5.3.280 */
    0,
    UserMarshalRoutines,
    0,  /* notify & notify_flag routine table */
    0x1, /* MIDL flag */
    0,  /* Reserved3 */
    0,  /* Reserved4 */
    0   /* Reserved5 */
    };

#pragma data_seg(".rdata")

static const USER_MARSHAL_ROUTINE_QUADRUPLE
UserMarshalRoutines[ WIRE_MARSHAL_TABLE_SIZE ] =
        {

            {
            VARIANT_UserSize
            ,VARIANT_UserMarshal
            ,VARIANT_UserUnmarshal
            ,VARIANT_UserFree
            }

        };


#if !defined(__RPC_WIN32__)
#error  Invalid build platform for this stub.
#endif

#if !(TARGET_IS_NT40_OR_LATER)
#error You need a Windows NT 4.0 or later to run this
stub because it uses these features:
#error   -Oif or -Oicf, [wire_marshal] or
[user_marshal] attribute.
#error However, your C/C++ compilation flags indicate
you intend to run this app on earlier systems.
#error This app will die there with the
RPC_X_WRONG_STUB_VERSION error.
#endif


static const MIDL_PROC_FORMAT_STRING
__MIDL_ProcFormatString =
    {
        0,
        {

          /* Procedure NewOrder */

                                0x33,               /*
FC_AUTO_HANDLE */
                                0x6c,               /*
Old Flags:  object, Oi2 */
/*  2 */  NdrFcLong( 0x0 ),   /* 0 */
/*  6 */  NdrFcShort( 0x3 ),  /* 3 */
#ifndef _ALPHA_
#ifndef _PPC_
#if !defined(_MIPS_)
/*  8 */  NdrFcShort( 0x1c ), /* x86 Stack
size/offset = 28 */
#else
                                NdrFcShort( 0x20 ), /*
MIPS Stack size/offset = 32 */
#endif
#else
                                NdrFcShort( 0x20 ), /*
PPC Stack size/offset = 32 */
#endif
#else
                                NdrFcShort( 0x28 ), /*
Alpha Stack size/offset = 40 */
#endif
/* 10 */  NdrFcShort( 0x0 ),  /* 0 */
/* 12 */  NdrFcShort( 0x8 ),  /* 8 */
/* 14 */  0x7,                /* Oi2 Flags:  srv must
size, clt must size, has return, */
                                0x3,                /*
3 */

          /* Parameter txn_in */

/* 16 */  NdrFcShort( 0x8b ), /* Flags:  must size,
must free, in, by val, */
#ifndef _ALPHA_
#ifndef _PPC_
#if !defined(_MIPS_)
/* 18 */  NdrFcShort( 0x4 ),  /* x86 Stack
size/offset = 4 */
#else
                                NdrFcShort( 0x8 ),  /*
MIPS Stack size/offset = 8 */
#endif
#else
                                NdrFcShort( 0x8 ),  /*
PPC Stack size/offset = 8 */
#endif
#else
                                NdrFcShort( 0x8 ),  /*
Alpha Stack size/offset = 8 */
#endif
/* 20 */  NdrFcShort( 0x3c8 ),          /* Type
Offset=968 */

          /* Parameter txn_out */

/* 22 */  NdrFcShort( 0x4113 ),         /* Flags:
must size, must free, out, simple ref, srv alloc
size=16 */
#ifndef _ALPHA_
#ifndef _PPC_
#if !defined(_MIPS_)
/* 24 */  NdrFcShort( 0x14 ), /* x86 Stack
size/offset = 20 */
#else
                                NdrFcShort( 0x18 ), /*
MIPS Stack size/offset = 24 */
#endif
#else
                                NdrFcShort( 0x18 ), /*
PPC Stack size/offset = 24 */
#endif
#else
                                NdrFcShort( 0x18 ), /*
Alpha Stack size/offset = 24 */
#endif
/* 26 */  NdrFcShort( 0x3da ),          /* Type
Offset=986 */

          /* Return value */

/* 28 */  NdrFcShort( 0x70 ), /* Flags:  out, return,
base type, */
#ifndef _ALPHA_
#ifndef _PPC_
#if !defined(_MIPS_)
/* 30 */  NdrFcShort( 0x18 ), /* x86 Stack
size/offset = 24 */
#else
                                NdrFcShort( 0x1c ), /*
MIPS Stack size/offset = 28 */
#endif
#else
                                NdrFcShort( 0x1c ), /*
PPC Stack size/offset = 28 */
#endif
#else
                                NdrFcShort( 0x20 ), /*
Alpha Stack size/offset = 32 */
#endif
/* 32 */  0x8,                /* FC_LONG */
                                0x0,                /*
0 */

          /* Procedure Payment */

/* 34 */  0x33,               /* FC_AUTO_HANDLE */
                                0x6c,               /*
Old Flags:  object, Oi2 */
/* 36 */  NdrFcLong( 0x0 ),   /* 0 */
/* 40 */  NdrFcShort( 0x4 ),  /* 4 */
#ifndef _ALPHA_
#ifndef _PPC_
```


©2005 Hewlett-Packard Company. All rights reserved.

```
#if !defined(_MIPS_)
/* 42 */  NdrFcShort( 0x1c ), /* x86 Stack
size/offset = 28 */
#else
                            NdrFcShort( 0x20 ), /*
MIPS Stack size/offset = 32 */
#endif
#else
                            NdrFcShort( 0x20 ), /*
PPC Stack size/offset = 32 */
#endif
#else
                            NdrFcShort( 0x28 ), /*
Alpha Stack size/offset = 40 */
#endif
/* 44 */  NdrFcShort( 0x0 ),  /* 0 */
/* 46 */  NdrFcShort( 0x8 ),  /* 8 */
/* 48 */  0x7,                /* Oi2 Flags:  srv must
size, clt must size, has return, */
                            0x3,                /*
3 */

          /* Parameter txn_in */

/* 50 */  NdrFcShort( 0x8b ), /* Flags:  must size,
must free, in, by val, */
#ifndef _ALPHA_
#ifndef _PPC_
#if !defined(_MIPS_)
/* 52 */  NdrFcShort( 0x4 ),  /* x86 Stack
size/offset = 4 */
#else
                            NdrFcShort( 0x8 ),  /*
MIPS Stack size/offset = 8 */
#endif
#else
                            NdrFcShort( 0x8 ),  /*
PPC Stack size/offset = 8 */
#endif
#else
                            NdrFcShort( 0x8 ),  /*
Alpha Stack size/offset = 8 */
#endif
/* 54 */  NdrFcShort( 0x3c8 ),          /* Type
Offset=968 */

          /* Parameter txn_out */

/* 56 */  NdrFcShort( 0x4113 ),         /* Flags:
must size, must free, out, simple ref, srv alloc
size=16 */
#ifndef _ALPHA_
#ifndef _PPC_
#if !defined(_MIPS_)
/* 58 */  NdrFcShort( 0x14 ), /* x86 Stack
size/offset = 20 */
#else
                            NdrFcShort( 0x18 ), /*
MIPS Stack size/offset = 24 */
#endif
#else
                            NdrFcShort( 0x18 ), /*
PPC Stack size/offset = 24 */
#endif
#else
                            NdrFcShort( 0x18 ), /*
Alpha Stack size/offset = 24 */
#endif
/* 60 */  NdrFcShort( 0x3da ),          /* Type
Offset=986 */

          /* Return value */

/* 62 */  NdrFcShort( 0x70 ), /* Flags:  out, return,
base type, */
#ifndef _ALPHA_
#ifndef _PPC_
#if !defined(_MIPS_)
/* 64 */  NdrFcShort( 0x18 ), /* x86 Stack
size/offset = 24 */
#else
                            NdrFcShort( 0x1c ), /*
MIPS Stack size/offset = 28 */
#endif
#else
                            NdrFcShort( 0x1c ), /*
PPC Stack size/offset = 28 */
#endif
#else
                            NdrFcShort( 0x20 ), /*
Alpha Stack size/offset = 32 */
#endif
/* 66 */  0x8,                /* FC_LONG */
                            0x0,                /*
0 */

          /* Procedure Delivery */

/* 68 */  0x33,               /* FC_AUTO_HANDLE */
                            0x6c,               /*
Old Flags:  object, Oi2 */
/* 70 */  NdrFcLong( 0x0 ),   /* 0 */
/* 74 */  NdrFcShort( 0x5 ),  /* 5 */
#ifndef _ALPHA_
#ifndef _PPC_
#if !defined(_MIPS_)
/* 76 */  NdrFcShort( 0x1c ), /* x86 Stack
size/offset = 28 */
#else
                            NdrFcShort( 0x20 ), /*
MIPS Stack size/offset = 32 */
#endif
#else
                            NdrFcShort( 0x20 ), /*
PPC Stack size/offset = 32 */
#endif
#else
                            NdrFcShort( 0x28 ), /*
Alpha Stack size/offset = 40 */
#endif
/* 78 */  NdrFcShort( 0x0 ),  /* 0 */
/* 80 */  NdrFcShort( 0x8 ),  /* 8 */
/* 82 */  0x7,                /* Oi2 Flags:  srv must
size, clt must size, has return, */
                            0x3,                /*
3 */

          /* Parameter txn_in */

/* 84 */  NdrFcShort( 0x8b ), /* Flags:  must size,
must free, in, by val, */
#ifndef _ALPHA_
#ifndef _PPC_
#if !defined(_MIPS_)
/* 86 */  NdrFcShort( 0x4 ),  /* x86 Stack
size/offset = 4 */
#else
                            NdrFcShort( 0x8 ),  /*
MIPS Stack size/offset = 8 */
#endif
#else
                            NdrFcShort( 0x8 ),  /*
PPC Stack size/offset = 8 */
#endif
#else
                            NdrFcShort( 0x8 ),  /*
Alpha Stack size/offset = 8 */
#endif
/* 88 */  NdrFcShort( 0x3c8 ),          /* Type
Offset=968 */

          /* Parameter txn_out */

/* 90 */  NdrFcShort( 0x4113 ),         /* Flags:
must size, must free, out, simple ref, srv alloc
size=16 */
#ifndef _ALPHA_
#ifndef _PPC_
#if !defined(_MIPS_)
/* 92 */  NdrFcShort( 0x14 ), /* x86 Stack
size/offset = 20 */
#else
                            NdrFcShort( 0x18 ), /*
MIPS Stack size/offset = 24 */
#endif
#else
                            NdrFcShort( 0x18 ), /*
PPC Stack size/offset = 24 */
#endif
#else
                            NdrFcShort( 0x18 ), /*
Alpha Stack size/offset = 24 */
#endif
/* 94 */  NdrFcShort( 0x3da ),          /* Type
Offset=986 */

          /* Return value */

/* 96 */  NdrFcShort( 0x70 ), /* Flags:  out, return,
base type, */
#ifndef _ALPHA_
#ifndef _PPC_
#if !defined(_MIPS_)
/* 98 */  NdrFcShort( 0x18 ), /* x86 Stack
size/offset = 24 */
#else
                            NdrFcShort( 0x1c ), /*
MIPS Stack size/offset = 28 */
#endif
```


©2005 Hewlett-Packard Company. All rights reserved.

```
#else
                                NdrFcShort( 0x1c ), /*
PPC Stack size/offset = 28 */
#endif
#else
                                NdrFcShort( 0x20 ), /*
Alpha Stack size/offset = 32 */
#endif
/* 100 */ 0x8,                  /* FC_LONG */
                                0x0,                /*
0 */

          /* Procedure StockLevel */

/* 102 */ 0x33,                 /* FC_AUTO_HANDLE */
                                0x6c,               /*
Old Flags:  object, Oi2 */
/* 104 */ NdrFcLong( 0x0 ),    /* 0 */
/* 108 */ NdrFcShort( 0x6 ),   /* 6 */
#ifndef _ALPHA_
#ifndef _PPC_
#if !defined(_MIPS_)
/* 110 */ NdrFcShort( 0x1c ), /* x86 Stack
size/offset = 28 */
#else
                                NdrFcShort( 0x20 ), /*
MIPS Stack size/offset = 32 */
#endif
#else
                                NdrFcShort( 0x20 ), /*
PPC Stack size/offset = 32 */
#endif
#else
                                NdrFcShort( 0x28 ), /*
Alpha Stack size/offset = 40 */
#endif
/* 112 */ NdrFcShort( 0x0 ),   /* 0 */
/* 114 */ NdrFcShort( 0x8 ),   /* 8 */
/* 116 */ 0x7,                  /* Oi2 Flags:  srv must
size, clt must size, has return, */
                                0x3,                /*
3 */

          /* Parameter txn_in */

/* 118 */ NdrFcShort( 0x8b ), /* Flags:  must size,
must free, in, by val, */
#ifndef _ALPHA_
#ifndef _PPC_
#if !defined(_MIPS_)
/* 120 */ NdrFcShort( 0x4 ),   /* x86 Stack
size/offset = 4 */
#else
                                NdrFcShort( 0x8 ),  /*
MIPS Stack size/offset = 8 */
#endif
#else
                                NdrFcShort( 0x8 ),  /*
PPC Stack size/offset = 8 */
#endif
#else
                                NdrFcShort( 0x8 ),  /*
Alpha Stack size/offset = 8 */
#endif
/* 122 */ NdrFcShort( 0x3c8 ),          /* Type
Offset=968 */

          /* Parameter txn_out */

/* 124 */ NdrFcShort( 0x4113 ),         /* Flags:
must size, must free, out, simple ref, srv alloc
size=16 */
#ifndef _ALPHA_
#ifndef _PPC_
#if !defined(_MIPS_)
/* 126 */ NdrFcShort( 0x14 ), /* x86 Stack
size/offset = 20 */
#else
                                NdrFcShort( 0x18 ), /*
MIPS Stack size/offset = 24 */
#endif
#else
                                NdrFcShort( 0x18 ), /*
PPC Stack size/offset = 24 */
#endif
#else
                                NdrFcShort( 0x18 ), /*
Alpha Stack size/offset = 24 */
#endif
/* 128 */ NdrFcShort( 0x3da ),          /* Type
Offset=986 */

          /* Return value */

/* 130 */ NdrFcShort( 0x70 ), /* Flags:  out, return,
base type, */
#ifndef _ALPHA_
#ifndef _PPC_
#if !defined(_MIPS_)
/* 132 */ NdrFcShort( 0x18 ), /* x86 Stack
size/offset = 24 */
#else
                                NdrFcShort( 0x1c ), /*
MIPS Stack size/offset = 28 */
#endif
#else
                                NdrFcShort( 0x1c ), /*
PPC Stack size/offset = 28 */
#endif
#else
                                NdrFcShort( 0x20 ), /*
Alpha Stack size/offset = 32 */
#endif
/* 134 */ 0x8,                  /* FC_LONG */
                                0x0,                /*
0 */

          /* Procedure OrderStatus */

/* 136 */ 0x33,                 /* FC_AUTO_HANDLE */
                                0x6c,               /*
Old Flags:  object, Oi2 */
/* 138 */ NdrFcLong( 0x0 ),    /* 0 */
/* 142 */ NdrFcShort( 0x7 ),   /* 7 */
#ifndef _ALPHA_
#ifndef _PPC_
#if !defined(_MIPS_)
/* 144 */ NdrFcShort( 0x1c ), /* x86 Stack
size/offset = 28 */
#else
                                NdrFcShort( 0x20 ), /*
MIPS Stack size/offset = 32 */
#endif
#else
                                NdrFcShort( 0x20 ), /*
PPC Stack size/offset = 32 */
#endif
#else
                                NdrFcShort( 0x28 ), /*
Alpha Stack size/offset = 40 */
#endif
/* 146 */ NdrFcShort( 0x0 ),   /* 0 */
/* 148 */ NdrFcShort( 0x8 ),   /* 8 */
/* 150 */ 0x7,                  /* Oi2 Flags:  srv must
size, clt must size, has return, */
                                0x3,                /*
3 */

          /* Parameter txn_in */

/* 152 */ NdrFcShort( 0x8b ), /* Flags:  must size,
must free, in, by val, */
#ifndef _ALPHA_
#ifndef _PPC_
#if !defined(_MIPS_)
/* 154 */ NdrFcShort( 0x4 ),   /* x86 Stack
size/offset = 4 */
#else
                                NdrFcShort( 0x8 ),  /*
MIPS Stack size/offset = 8 */
#endif
#else
                                NdrFcShort( 0x8 ),  /*
PPC Stack size/offset = 8 */
#endif
#else
                                NdrFcShort( 0x8 ),  /*
Alpha Stack size/offset = 8 */
#endif
/* 156 */ NdrFcShort( 0x3c8 ),          /* Type
Offset=968 */

          /* Parameter txn_out */

/* 158 */ NdrFcShort( 0x4113 ),         /* Flags:
must size, must free, out, simple ref, srv alloc
size=16 */
#ifndef _ALPHA_
#ifndef _PPC_
#if !defined(_MIPS_)
/* 160 */ NdrFcShort( 0x14 ), /* x86 Stack
size/offset = 20 */
#else
                                NdrFcShort( 0x18 ), /*
MIPS Stack size/offset = 24 */
#endif
#else
                                NdrFcShort( 0x18 ), /*
PPC Stack size/offset = 24 */
```


©2005 Hewlett-Packard Company. All rights reserved.

```
#endif
#else
                                NdrFcShort( 0x18 ), /*
Alpha Stack size/offset = 24 */
#endif
/* 162 */ NdrFcShort( 0x3da ),          /* Type
Offset=986 */

          /* Return value */

/* 164 */ NdrFcShort( 0x70 ), /* Flags:  out, return,
base type, */
#ifndef _ALPHA_
#ifndef _PPC_
#if !defined(_MIPS_)
/* 166 */ NdrFcShort( 0x18 ), /* x86 Stack
size/offset = 24 */
#else
                                NdrFcShort( 0x1c ), /*
MIPS Stack size/offset = 28 */
#endif
#else
                                NdrFcShort( 0x1c ), /*
PPC Stack size/offset = 28 */
#endif
#else
                                NdrFcShort( 0x20 ), /*
Alpha Stack size/offset = 32 */
#endif
/* 168 */ 0x8,                  /* FC_LONG */
                                0x0,                /*
0 */

          /* Procedure CallSetComplete */

/* 170 */ 0x33,                 /* FC_AUTO_HANDLE */
                                0x6c,               /*
Old Flags:  object, Oi2 */
/* 172 */ NdrFcLong( 0x0 ),   /* 0 */
/* 176 */ NdrFcShort( 0x8 ),  /* 8 */
#ifndef _ALPHA_
/* 178 */ NdrFcShort( 0x8 ),  /* x86, MIPS, PPC Stack
size/offset = 8 */
#else
                                NdrFcShort( 0x10 ), /*
Alpha Stack size/offset = 16 */
#endif
/* 180 */ NdrFcShort( 0x0 ),  /* 0 */
/* 182 */ NdrFcShort( 0x8 ),  /* 8 */
/* 184 */ 0x4,                  /* Oi2 Flags:  has
return, */
                                0x1,                /*
1 */

          /* Return value */

/* 186 */ NdrFcShort( 0x70 ), /* Flags:  out, return,
base type, */
#ifndef _ALPHA_
/* 188 */ NdrFcShort( 0x4 ),  /* x86, MIPS, PPC Stack
size/offset = 4 */
#else
                                NdrFcShort( 0x8 ),  /*
Alpha Stack size/offset = 8 */
#endif
/* 190 */ 0x8,                  /* FC_LONG */
                                0x0,                /*
0 */

                                0x0
        }
    };

static const MIDL_TYPE_FORMAT_STRING
__MIDL_TypeFormatString =
    {
        0,
        {
                                NdrFcShort( 0x0 ),  /*
0 */
/*  2 */
                                0x12, 0x0,          /*
FC_UP */
/*  4 */  NdrFcShort( 0x3b0 ),          /* Offset=
944 (948) */
/*  6 */
                                0x2b,               /*
FC_NON_ENCAPSULATED_UNION */
                                0x9,                /*
FC_ULONG */
/*  8 */  0x7,                  /* Corr desc: FC_USHORT
*/
                                0x0,                /*
*/
/* 10 */  NdrFcShort( 0xfff8 ),         /* -8 */
/* 12 */  NdrFcShort( 0x2 ),  /* Offset= 2 (14) */
/* 14 */  NdrFcShort( 0x10 ), /* 16 */
/* 16 */  NdrFcShort( 0x2b ), /* 43 */
/* 18 */  NdrFcLong( 0x3 ),   /* 3 */
/* 22 */  NdrFcShort( 0x8008 ),         /* Simple arm
type: FC_LONG */
/* 24 */  NdrFcLong( 0x11 ),  /* 17 */
/* 28 */  NdrFcShort( 0x8001 ),         /* Simple arm
type: FC_BYTE */
/* 30 */  NdrFcLong( 0x2 ),   /* 2 */
/* 34 */  NdrFcShort( 0x8006 ),         /* Simple arm
type: FC_SHORT */
/* 36 */  NdrFcLong( 0x4 ),   /* 4 */
/* 40 */  NdrFcShort( 0x800a ),         /* Simple arm
type: FC_FLOAT */
/* 42 */  NdrFcLong( 0x5 ),   /* 5 */
/* 46 */  NdrFcShort( 0x800c ),         /* Simple arm
type: FC_DOUBLE */
/* 48 */  NdrFcLong( 0xb ),   /* 11 */
/* 52 */  NdrFcShort( 0x8006 ),         /* Simple arm
type: FC_SHORT */
/* 54 */  NdrFcLong( 0xa ),   /* 10 */
/* 58 */  NdrFcShort( 0x8008 ),         /* Simple arm
type: FC_LONG */
/* 60 */  NdrFcLong( 0x6 ),   /* 6 */
/* 64 */  NdrFcShort( 0xd6 ), /* Offset= 214 (278) */
/* 66 */  NdrFcLong( 0x7 ),   /* 7 */
/* 70 */  NdrFcShort( 0x800c ),         /* Simple arm
type: FC_DOUBLE */
/* 72 */  NdrFcLong( 0x8 ),   /* 8 */
/* 76 */  NdrFcShort( 0xd0 ), /* Offset= 208 (284) */
/* 78 */  NdrFcLong( 0xd ),   /* 13 */
/* 82 */  NdrFcShort( 0xe2 ), /* Offset= 226 (308) */
/* 84 */  NdrFcLong( 0x9 ),   /* 9 */
/* 88 */  NdrFcShort( 0xee ), /* Offset= 238 (326) */
/* 90 */  NdrFcLong( 0x2000 ),          /* 8192 */
/* 94 */  NdrFcShort( 0xfa ), /* Offset= 250 (344) */
/* 96 */  NdrFcLong( 0x24 ),  /* 36 */
/* 100 */ NdrFcShort( 0x308 ),          /* Offset=
776 (876) */
/* 102 */ NdrFcLong( 0x4024 ),          /* 16420 */
/* 106 */ NdrFcShort( 0x302 ),          /* Offset=
770 (876) */
/* 108 */ NdrFcLong( 0x4011 ),          /* 16401 */
/* 112 */ NdrFcShort( 0x300 ),          /* Offset=
768 (880) */
/* 114 */ NdrFcLong( 0x4002 ),          /* 16386 */
/* 118 */ NdrFcShort( 0x2fe ),          /* Offset=
766 (884) */
/* 120 */ NdrFcLong( 0x4003 ),          /* 16387 */
/* 124 */ NdrFcShort( 0x2fc ),          /* Offset=
764 (888) */
/* 126 */ NdrFcLong( 0x4004 ),          /* 16388 */
/* 130 */ NdrFcShort( 0x2fa ),          /* Offset=
762 (892) */
/* 132 */ NdrFcLong( 0x4005 ),          /* 16389 */
/* 136 */ NdrFcShort( 0x2f8 ),          /* Offset=
760 (896) */
/* 138 */ NdrFcLong( 0x400b ),          /* 16395 */
/* 142 */ NdrFcShort( 0x2e6 ),          /* Offset=
742 (884) */
/* 144 */ NdrFcLong( 0x400a ),          /* 16394 */
/* 148 */ NdrFcShort( 0x2e4 ),          /* Offset=
740 (888) */
/* 150 */ NdrFcLong( 0x4006 ),          /* 16390 */
/* 154 */ NdrFcShort( 0x2ea ),          /* Offset=
746 (900) */
/* 156 */ NdrFcLong( 0x4007 ),          /* 16391 */
/* 160 */ NdrFcShort( 0x2e0 ),          /* Offset=
736 (896) */
/* 162 */ NdrFcLong( 0x4008 ),          /* 16392 */
/* 166 */ NdrFcShort( 0x2e2 ),          /* Offset=
738 (904) */
/* 168 */ NdrFcLong( 0x400d ),          /* 16397 */
/* 172 */ NdrFcShort( 0x2e0 ),          /* Offset=
736 (908) */
/* 174 */ NdrFcLong( 0x4009 ),          /* 16393 */
/* 178 */ NdrFcShort( 0x2de ),          /* Offset=
734 (912) */
/* 180 */ NdrFcLong( 0x6000 ),          /* 24576 */
/* 184 */ NdrFcShort( 0x2dc ),          /* Offset=
732 (916) */
/* 186 */ NdrFcLong( 0x400c ),          /* 16396 */
/* 190 */ NdrFcShort( 0x2da ),          /* Offset=
730 (920) */
/* 192 */ NdrFcLong( 0x10 ),  /* 16 */
/* 196 */ NdrFcShort( 0x8002 ),         /* Simple arm
type: FC_CHAR */
/* 198 */ NdrFcLong( 0x12 ),  /* 18 */
/* 202 */ NdrFcShort( 0x8006 ),         /* Simple arm
type: FC_SHORT */
/* 204 */ NdrFcLong( 0x13 ),  /* 19 */
```


©2005 Hewlett-Packard Company. All rights reserved.

```
/* 208 */ NdrFcShort( 0x8008 ),         /* Simple arm
type: FC_LONG */
/* 210 */ NdrFcLong( 0x16 ),  /* 22 */
/* 214 */ NdrFcShort( 0x8008 ),         /* Simple arm
type: FC_LONG */
/* 216 */ NdrFcLong( 0x17 ),  /* 23 */
/* 220 */ NdrFcShort( 0x8008 ),         /* Simple arm
type: FC_LONG */
/* 222 */ NdrFcLong( 0xe ),   /* 14 */
/* 226 */ NdrFcShort( 0x2be ),          /* Offset=
702 (928) */
/* 228 */ NdrFcLong( 0x400e ),          /* 16398 */
/* 232 */ NdrFcShort( 0x2c4 ),          /* Offset=
708 (940) */
/* 234 */ NdrFcLong( 0x4010 ),          /* 16400 */
/* 238 */ NdrFcShort( 0x2c2 ),          /* Offset=
706 (944) */
/* 240 */ NdrFcLong( 0x4012 ),          /* 16402 */
/* 244 */ NdrFcShort( 0x280 ),          /* Offset=
640 (884) */
/* 246 */ NdrFcLong( 0x4013 ),          /* 16403 */
/* 250 */ NdrFcShort( 0x27e ),          /* Offset=
638 (888) */
/* 252 */ NdrFcLong( 0x4016 ),          /* 16406 */
/* 256 */ NdrFcShort( 0x278 ),          /* Offset=
632 (888) */
/* 258 */ NdrFcLong( 0x4017 ),          /* 16407 */
/* 262 */ NdrFcShort( 0x272 ),          /* Offset=
626 (888) */
/* 264 */ NdrFcLong( 0x0 ),   /* 0 */
/* 268 */ NdrFcShort( 0x0 ),  /* Offset= 0 (268) */
/* 270 */ NdrFcLong( 0x1 ),   /* 1 */
/* 274 */ NdrFcShort( 0x0 ),  /* Offset= 0 (274) */
/* 276 */ NdrFcShort( 0xffffffff ),     /* Offset= -1
(275) */
/* 278 */
                                0x15,               /*
FC_STRUCT */
                                0x7,                /*
7 */
/* 280 */ NdrFcShort( 0x8 ),  /* 8 */
/* 282 */ 0xb,                /* FC_HYPER */
                                0x5b,               /*
FC_END */
/* 284 */
                                0x12, 0x0,          /*
FC_UP */
/* 286 */ NdrFcShort( 0xc ),  /* Offset= 12 (298) */
/* 288 */
                                0x1b,               /*
FC_CARRAY */
                                0x1,                /*
1 */
/* 290 */ NdrFcShort( 0x2 ),  /* 2 */
/* 292 */ 0x9,                /* Corr desc: FC_ULONG
*/
                                0x0,                /*
*/
/* 294 */ NdrFcShort( 0xfffc ),         /* -4 */
/* 296 */ 0x6,                /* FC_SHORT */
                                0x5b,               /*
FC_END */
/* 298 */
                                0x17,               /*
FC_CSTRUCT */
                                0x3,                /*
3 */
/* 300 */ NdrFcShort( 0x8 ),  /* 8 */
/* 302 */ NdrFcShort( 0xfffffff2 ),     /* Offset= -
14 (288) */
/* 304 */ 0x8,                /* FC_LONG */
                                0x8,                /*
FC_LONG */
/* 306 */ 0x5c,               /* FC_PAD */
                                0x5b,               /*
FC_END */
/* 308 */
                                0x2f,               /*
FC_IP */
                                0x5a,               /*
FC_CONSTANT_IID */
/* 310 */ NdrFcLong( 0x0 ),   /* 0 */
/* 314 */ NdrFcShort( 0x0 ),  /* 0 */
/* 316 */ NdrFcShort( 0x0 ),  /* 0 */
/* 318 */ 0xc0,               /* 192 */
                                0x0,                /*
0 */
/* 320 */ 0x0,                /* 0 */
                                0x0,                /*
0 */
/* 322 */ 0x0,                /* 0 */
                                0x0,                /*
0 */
/* 324 */ 0x0,                /* 0 */
                                0x46,               /*
70 */
/* 326 */
                                0x2f,               /*
FC_IP */
                                0x5a,               /*
FC_CONSTANT_IID */
/* 328 */ NdrFcLong( 0x20400 ),         /* 132096 */
/* 332 */ NdrFcShort( 0x0 ),  /* 0 */
/* 334 */ NdrFcShort( 0x0 ),  /* 0 */
/* 336 */ 0xc0,               /* 192 */
                                0x0,                /*
0 */
/* 338 */ 0x0,                /* 0 */
                                0x0,                /*
0 */
/* 340 */ 0x0,                /* 0 */
                                0x0,                /*
0 */
/* 342 */ 0x0,                /* 0 */
                                0x46,               /*
70 */
/* 344 */
                                0x12, 0x10,         /*
FC_UP [pointer_deref] */
/* 346 */ NdrFcShort( 0x2 ),  /* Offset= 2 (348) */
/* 348 */
                                0x12, 0x0,          /*
FC_UP */
/* 350 */ NdrFcShort( 0x1fc ),          /* Offset=
508 (858) */
/* 352 */
                                0x2a,               /*
FC_ENCAPSULATED_UNION */
                                0x49,               /*
73 */
/* 354 */ NdrFcShort( 0x18 ), /* 24 */
/* 356 */ NdrFcShort( 0xa ),  /* 10 */
/* 358 */ NdrFcLong( 0x8 ),   /* 8 */
/* 362 */ NdrFcShort( 0x58 ), /* Offset= 88 (450) */
/* 364 */ NdrFcLong( 0xd ),   /* 13 */
/* 368 */ NdrFcShort( 0x78 ), /* Offset= 120 (488) */
/* 370 */ NdrFcLong( 0x9 ),   /* 9 */
/* 374 */ NdrFcShort( 0x94 ), /* Offset= 148 (522) */
/* 376 */ NdrFcLong( 0xc ),   /* 12 */
/* 380 */ NdrFcShort( 0xbc ), /* Offset= 188 (568) */
/* 382 */ NdrFcLong( 0x24 ),  /* 36 */
/* 386 */ NdrFcShort( 0x114 ),          /* Offset=
276 (662) */
/* 388 */ NdrFcLong( 0x800d ),          /* 32781 */
/* 392 */ NdrFcShort( 0x130 ),          /* Offset=
304 (696) */
/* 394 */ NdrFcLong( 0x10 ),  /* 16 */
/* 398 */ NdrFcShort( 0x148 ),          /* Offset=
328 (726) */
/* 400 */ NdrFcLong( 0x2 ),   /* 2 */
/* 404 */ NdrFcShort( 0x160 ),          /* Offset=
352 (756) */
/* 406 */ NdrFcLong( 0x3 ),   /* 3 */
/* 410 */ NdrFcShort( 0x178 ),          /* Offset=
376 (786) */
/* 412 */ NdrFcLong( 0x14 ),  /* 20 */
/* 416 */ NdrFcShort( 0x190 ),          /* Offset=
400 (816) */
/* 418 */ NdrFcShort( 0xffffffff ),     /* Offset= -1
(417) */
/* 420 */
                                0x1b,               /*
FC_CARRAY */
                                0x3,                /*
3 */
/* 422 */ NdrFcShort( 0x4 ),  /* 4 */
/* 424 */ 0x19,               /* Corr desc:  field
pointer, FC_ULONG */
                                0x0,                /*
*/
/* 426 */ NdrFcShort( 0x0 ),  /* 0 */
/* 428 */
                                0x4b,               /*
FC_PP */
                                0x5c,               /*
FC_PAD */
/* 430 */
                                0x48,               /*
FC_VARIABLE_REPEAT */
                                0x49,               /*
FC_FIXED_OFFSET */
/* 432 */ NdrFcShort( 0x4 ),  /* 4 */
/* 434 */ NdrFcShort( 0x0 ),  /* 0 */
/* 436 */ NdrFcShort( 0x1 ),  /* 1 */
/* 438 */ NdrFcShort( 0x0 ),  /* 0 */
/* 440 */ NdrFcShort( 0x0 ),  /* 0 */
/* 442 */ 0x12, 0x0,          /* FC_UP */
/* 444 */ NdrFcShort( 0xffffff6e ),     /* Offset= -
146 (298) */
```


©2005 Hewlett-Packard Company. All rights reserved.

```
/* 446 */
                                0x5b,               /*
FC_END */

                                0x8,                /*
FC_LONG */
/* 448 */ 0x5c,                 /* FC_PAD */
                                0x5b,               /*
FC_END */
/* 450 */
                                0x16,               /*
FC_PSTRUCT */
                                0x3,                /*
3 */
/* 452 */ NdrFcShort( 0x8 ),  /* 8 */
/* 454 */
                                0x4b,               /*
FC_PP */
                                0x5c,               /*
FC_PAD */
/* 456 */
                                0x46,               /*
FC_NO_REPEAT */
                                0x5c,               /*
FC_PAD */
/* 458 */ NdrFcShort( 0x4 ),  /* 4 */
/* 460 */ NdrFcShort( 0x4 ),  /* 4 */
/* 462 */ 0x11, 0x0,          /* FC_RP */
/* 464 */ NdrFcShort( 0xffffffd4 ),     /* Offset= -
44 (420) */
/* 466 */
                                0x5b,               /*
FC_END */

                                0x8,                /*
FC_LONG */
/* 468 */ 0x8,                 /* FC_LONG */
                                0x5b,               /*
FC_END */
/* 470 */
                                0x21,               /*
FC_BOGUS_ARRAY */
                                0x3,                /*
3 */
/* 472 */ NdrFcShort( 0x0 ),  /* 0 */
/* 474 */ 0x19,                /* Corr desc:  field
pointer, FC_ULONG */
                                0x0,                /*
*/
/* 476 */ NdrFcShort( 0x0 ),  /* 0 */
/* 478 */ NdrFcLong( 0xffffffff ),      /* -1 */
/* 482 */ 0x4c,                /* FC_EMBEDDED_COMPLEX
*/
                                0x0,                /*
0 */
/* 484 */ NdrFcShort( 0xffffff50 ),     /* Offset= -
176 (308) */
/* 486 */ 0x5c,                /* FC_PAD */
                                0x5b,               /*
FC_END */
/* 488 */
                                0x1a,               /*
FC_BOGUS_STRUCT */
                                0x3,                /*
3 */
/* 490 */ NdrFcShort( 0x8 ),  /* 8 */
/* 492 */ NdrFcShort( 0x0 ),  /* 0 */
/* 494 */ NdrFcShort( 0x6 ),  /* Offset= 6 (500) */
/* 496 */ 0x8,                 /* FC_LONG */
                                0x36,               /*
FC_POINTER */
/* 498 */ 0x5c,                /* FC_PAD */
                                0x5b,               /*
FC_END */
/* 500 */
                                0x11, 0x0,          /*
FC_RP */
/* 502 */ NdrFcShort( 0xffffffe0 ),     /* Offset= -
32 (470) */
/* 504 */
                                0x21,               /*
FC_BOGUS_ARRAY */
                                0x3,                /*
3 */
/* 506 */ NdrFcShort( 0x0 ),  /* 0 */
/* 508 */ 0x19,                /* Corr desc:  field
pointer, FC_ULONG */
                                0x0,                /*
*/
/* 510 */ NdrFcShort( 0x0 ),  /* 0 */
/* 512 */ NdrFcLong( 0xffffffff ),      /* -1 */
/* 516 */ 0x4c,                /* FC_EMBEDDED_COMPLEX
*/
                                0x0,                /*
0 */
/* 518 */ NdrFcShort( 0xffffff40 ),     /* Offset= -
192 (326) */
/* 520 */ 0x5c,                /* FC_PAD */
                                0x5b,               /*
FC_END */
/* 522 */
                                0x1a,               /*
FC_BOGUS_STRUCT */
                                0x3,                /*
3 */
/* 524 */ NdrFcShort( 0x8 ),  /* 8 */
/* 526 */ NdrFcShort( 0x0 ),  /* 0 */
/* 528 */ NdrFcShort( 0x6 ),  /* Offset= 6 (534) */
/* 530 */ 0x8,                 /* FC_LONG */
                                0x36,               /*
FC_POINTER */
/* 532 */ 0x5c,                /* FC_PAD */
                                0x5b,               /*
FC_END */
/* 534 */
                                0x11, 0x0,          /*
FC_RP */
/* 536 */ NdrFcShort( 0xffffffe0 ),     /* Offset= -
32 (504) */
/* 538 */
                                0x1b,               /*
FC_CARRAY */
                                0x3,                /*
3 */
/* 540 */ NdrFcShort( 0x4 ),  /* 4 */
/* 542 */ 0x19,                /* Corr desc:  field
pointer, FC_ULONG */
                                0x0,                /*
*/
/* 544 */ NdrFcShort( 0x0 ),  /* 0 */
/* 546 */
                                0x4b,               /*
FC_PP */
                                0x5c,               /*
FC_PAD */
/* 548 */
                                0x48,               /*
FC_VARIABLE_REPEAT */
                                0x49,               /*
FC_FIXED_OFFSET */
/* 550 */ NdrFcShort( 0x4 ),  /* 4 */
/* 552 */ NdrFcShort( 0x0 ),  /* 0 */
/* 554 */ NdrFcShort( 0x1 ),  /* 1 */
/* 556 */ NdrFcShort( 0x0 ),  /* 0 */
/* 558 */ NdrFcShort( 0x0 ),  /* 0 */
/* 560 */ 0x12, 0x0,          /* FC_UP */
/* 562 */ NdrFcShort( 0x182 ),          /* Offset=
386 (948) */
/* 564 */
                                0x5b,               /*
FC_END */

                                0x8,                /*
FC_LONG */
/* 566 */ 0x5c,                /* FC_PAD */
                                0x5b,               /*
FC_END */
/* 568 */
                                0x1a,               /*
FC_BOGUS_STRUCT */
                                0x3,                /*
3 */
/* 570 */ NdrFcShort( 0x8 ),  /* 8 */
/* 572 */ NdrFcShort( 0x0 ),  /* 0 */
/* 574 */ NdrFcShort( 0x6 ),  /* Offset= 6 (580) */
/* 576 */ 0x8,                 /* FC_LONG */
                                0x36,               /*
FC_POINTER */
/* 578 */ 0x5c,                /* FC_PAD */
                                0x5b,               /*
FC_END */
/* 580 */
                                0x11, 0x0,          /*
FC_RP */
/* 582 */ NdrFcShort( 0xffffffd4 ),     /* Offset= -
44 (538) */
/* 584 */
                                0x2f,               /*
FC_IP */
                                0x5a,               /*
FC_CONSTANT_IID */
/* 586 */ NdrFcLong( 0x2f ),  /* 47 */
/* 590 */ NdrFcShort( 0x0 ),  /* 0 */
/* 592 */ NdrFcShort( 0x0 ),  /* 0 */
/* 594 */ 0xc0,                /* 192 */
                                0x0,                /*
0 */
/* 596 */ 0x0,                 /* 0 */
```


©2005 Hewlett-Packard Company. All rights reserved.

```
                                0x0,                /*
0 */
/* 598 */ 0x0,                  /* 0 */
                                0x0,                /*
0 */
/* 600 */ 0x0,                  /* 0 */
                                0x46,               /*
70 */
/* 602 */
                                0x1b,               /*
FC_CARRAY */
                                0x0,                /*
0 */
/* 604 */ NdrFcShort( 0x1 ),  /* 1 */
/* 606 */ 0x19,                 /* Corr desc:  field
pointer, FC_ULONG */
                                0x0,                /*
*/
/* 608 */ NdrFcShort( 0x4 ),  /* 4 */
/* 610 */ 0x1,                  /* FC_BYTE */
                                0x5b,               /*
FC_END */
/* 612 */
                                0x1a,               /*
FC_BOGUS_STRUCT */
                                0x3,                /*
3 */
/* 614 */ NdrFcShort( 0x10 ), /* 16 */
/* 616 */ NdrFcShort( 0x0 ),  /* 0 */
/* 618 */ NdrFcShort( 0xa ),  /* Offset= 10 (628) */
/* 620 */ 0x8,                  /* FC_LONG */
                                0x8,                /*
FC_LONG */
/* 622 */ 0x4c,                 /* FC_EMBEDDED_COMPLEX
*/
                                0x0,                /*
0 */
/* 624 */ NdrFcShort( 0xffffffd8 ),     /* Offset= -
40 (584) */
/* 626 */ 0x36,                 /* FC_POINTER */
                                0x5b,               /*
FC_END */
/* 628 */
                                0x12, 0x0,          /*
FC_UP */
/* 630 */ NdrFcShort( 0xffffffe4 ),     /* Offset= -
28 (602) */
/* 632 */
                                0x1b,               /*
FC_CARRAY */
                                0x3,                /*
3 */
/* 634 */ NdrFcShort( 0x4 ),  /* 4 */
/* 636 */ 0x19,                 /* Corr desc:  field
pointer, FC_ULONG */
                                0x0,                /*
*/
/* 638 */ NdrFcShort( 0x0 ),  /* 0 */
/* 640 */
                                0x4b,               /*
FC_PP */
                                0x5c,               /*
FC_PAD */
/* 642 */
                                0x48,               /*
FC_VARIABLE_REPEAT */
                                0x49,               /*
FC_FIXED_OFFSET */
/* 644 */ NdrFcShort( 0x4 ),  /* 4 */
/* 646 */ NdrFcShort( 0x0 ),  /* 0 */
/* 648 */ NdrFcShort( 0x1 ),  /* 1 */
/* 650 */ NdrFcShort( 0x0 ),  /* 0 */
/* 652 */ NdrFcShort( 0x0 ),  /* 0 */
/* 654 */ 0x12, 0x0,            /* FC_UP */
/* 656 */ NdrFcShort( 0xffffffd4 ),     /* Offset= -
44 (612) */
/* 658 */
                                0x5b,               /*
FC_END */

                                0x8,                /*
FC_LONG */
/* 660 */ 0x5c,                 /* FC_PAD */
                                0x5b,               /*
FC_END */
/* 662 */
                                0x1a,               /*
FC_BOGUS_STRUCT */
                                0x3,                /*
3 */
/* 664 */ NdrFcShort( 0x8 ),  /* 8 */
/* 666 */ NdrFcShort( 0x0 ),  /* 0 */
/* 668 */ NdrFcShort( 0x6 ),  /* Offset= 6 (674) */
/* 670 */ 0x8,                  /* FC_LONG */
                                0x36,               /*
FC_POINTER */
/* 672 */ 0x5c,                 /* FC_PAD */
                                0x5b,               /*
FC_END */
/* 674 */
                                0x11, 0x0,          /*
FC_RP */
/* 676 */ NdrFcShort( 0xffffffd4 ),     /* Offset= -
44 (632) */
/* 678 */
                                0x1d,               /*
FC_SMFARRAY */
                                0x0,                /*
0 */
/* 680 */ NdrFcShort( 0x8 ),  /* 8 */
/* 682 */ 0x1,                  /* FC_BYTE */
                                0x5b,               /*
FC_END */
/* 684 */
                                0x15,               /*
FC_STRUCT */
                                0x3,                /*
3 */
/* 686 */ NdrFcShort( 0x10 ), /* 16 */
/* 688 */ 0x8,                  /* FC_LONG */
                                0x6,                /*
FC_SHORT */
/* 690 */ 0x6,                  /* FC_SHORT */
                                0x4c,               /*
FC_EMBEDDED_COMPLEX */
/* 692 */ 0x0,                  /* 0 */
                                NdrFcShort( 0xfffffff1
),        /* Offset= -15 (678) */
                                0x5b,               /*
FC_END */
/* 696 */
                                0x1a,               /*
FC_BOGUS_STRUCT */
                                0x3,                /*
3 */
/* 698 */ NdrFcShort( 0x18 ), /* 24 */
/* 700 */ NdrFcShort( 0x0 ),  /* 0 */
/* 702 */ NdrFcShort( 0xa ),  /* Offset= 10 (712) */
/* 704 */ 0x8,                  /* FC_LONG */
                                0x36,               /*
FC_POINTER */
/* 706 */ 0x4c,                 /* FC_EMBEDDED_COMPLEX
*/
                                0x0,                /*
0 */
/* 708 */ NdrFcShort( 0xffffffe8 ),     /* Offset= -
24 (684) */
/* 710 */ 0x5c,                 /* FC_PAD */
                                0x5b,               /*
FC_END */
/* 712 */
                                0x11, 0x0,          /*
FC_RP */
/* 714 */ NdrFcShort( 0xffffff0c ),     /* Offset= -
244 (470) */
/* 716 */
                                0x1b,               /*
FC_CARRAY */
                                0x0,                /*
0 */
/* 718 */ NdrFcShort( 0x1 ),  /* 1 */
/* 720 */ 0x19,                 /* Corr desc:  field
pointer, FC_ULONG */
                                0x0,                /*
*/
/* 722 */ NdrFcShort( 0x0 ),  /* 0 */
/* 724 */ 0x1,                  /* FC_BYTE */
                                0x5b,               /*
FC_END */
/* 726 */
                                0x16,               /*
FC_PSTRUCT */
                                0x3,                /*
3 */
/* 728 */ NdrFcShort( 0x8 ),  /* 8 */
/* 730 */
                                0x4b,               /*
FC_PP */
                                0x5c,               /*
FC_PAD */
/* 732 */
                                0x46,               /*
FC_NO_REPEAT */
                                0x5c,               /*
FC_PAD */
/* 734 */ NdrFcShort( 0x4 ),  /* 4 */
/* 736 */ NdrFcShort( 0x4 ),  /* 4 */
/* 738 */ 0x12, 0x0,            /* FC_UP */
```


©2005 Hewlett-Packard Company. All rights reserved.

```
/* 740 */ NdrFcShort( 0xffffffe8 ),     /* Offset= -
24 (716) */
/* 742 */
                                0x5b,               /*
FC_END */

                                0x8,                /*
FC_LONG */
/* 744 */ 0x8,                  /* FC_LONG */
                                0x5b,               /*
FC_END */
/* 746 */
                                0x1b,               /*
FC_CARRAY */
                                0x1,                /*
1 */
/* 748 */ NdrFcShort( 0x2 ),    /* 2 */
/* 750 */ 0x19,                 /* Corr desc:  field
pointer, FC_ULONG */
                                0x0,                /*
*/
/* 752 */ NdrFcShort( 0x0 ),    /* 0 */
/* 754 */ 0x6,                  /* FC_SHORT */
                                0x5b,               /*
FC_END */
/* 756 */
                                0x16,               /*
FC_PSTRUCT */
                                0x3,                /*
3 */
/* 758 */ NdrFcShort( 0x8 ),    /* 8 */
/* 760 */
                                0x4b,               /*
FC_PP */
                                0x5c,               /*
FC_PAD */
/* 762 */
                                0x46,               /*
FC_NO_REPEAT */
                                0x5c,               /*
FC_PAD */
/* 764 */ NdrFcShort( 0x4 ),    /* 4 */
/* 766 */ NdrFcShort( 0x4 ),    /* 4 */
/* 768 */ 0x12, 0x0,            /* FC_UP */
/* 770 */ NdrFcShort( 0xffffffe8 ),     /* Offset= -
24 (746) */
/* 772 */
                                0x5b,               /*
FC_END */

                                0x8,                /*
FC_LONG */
/* 774 */ 0x8,                  /* FC_LONG */
                                0x5b,               /*
FC_END */
/* 776 */
                                0x1b,               /*
FC_CARRAY */
                                0x3,                /*
3 */
/* 778 */ NdrFcShort( 0x4 ),    /* 4 */
/* 780 */ 0x19,                 /* Corr desc:  field
pointer, FC_ULONG */
                                0x0,                /*
*/
/* 782 */ NdrFcShort( 0x0 ),    /* 0 */
/* 784 */ 0x8,                  /* FC_LONG */
                                0x5b,               /*
FC_END */
/* 786 */
                                0x16,               /*
FC_PSTRUCT */
                                0x3,                /*
3 */
/* 788 */ NdrFcShort( 0x8 ),    /* 8 */
/* 790 */
                                0x4b,               /*
FC_PP */
                                0x5c,               /*
FC_PAD */
/* 792 */
                                0x46,               /*
FC_NO_REPEAT */
                                0x5c,               /*
FC_PAD */
/* 794 */ NdrFcShort( 0x4 ),    /* 4 */
/* 796 */ NdrFcShort( 0x4 ),    /* 4 */
/* 798 */ 0x12, 0x0,            /* FC_UP */
/* 800 */ NdrFcShort( 0xffffffe8 ),     /* Offset= -
24 (776) */
/* 802 */
                                0x5b,               /*
FC_END */

                                0x8,                /*
FC_LONG */
/* 804 */ 0x8,                  /* FC_LONG */
                                0x5b,               /*
FC_END */
/* 806 */
                                0x1b,               /*
FC_CARRAY */
                                0x7,                /*
7 */
/* 808 */ NdrFcShort( 0x8 ),    /* 8 */
/* 810 */ 0x19,                 /* Corr desc:  field
pointer, FC_ULONG */
                                0x0,                /*
*/
/* 812 */ NdrFcShort( 0x0 ),    /* 0 */
/* 814 */ 0xb,                  /* FC_HYPER */
                                0x5b,               /*
FC_END */
/* 816 */
                                0x16,               /*
FC_PSTRUCT */
                                0x3,                /*
3 */
/* 818 */ NdrFcShort( 0x8 ),    /* 8 */
/* 820 */
                                0x4b,               /*
FC_PP */
                                0x5c,               /*
FC_PAD */
/* 822 */
                                0x46,               /*
FC_NO_REPEAT */
                                0x5c,               /*
FC_PAD */
/* 824 */ NdrFcShort( 0x4 ),    /* 4 */
/* 826 */ NdrFcShort( 0x4 ),    /* 4 */
/* 828 */ 0x12, 0x0,            /* FC_UP */
/* 830 */ NdrFcShort( 0xffffffe8 ),     /* Offset= -
24 (806) */
/* 832 */
                                0x5b,               /*
FC_END */

                                0x8,                /*
FC_LONG */
/* 834 */ 0x8,                  /* FC_LONG */
                                0x5b,               /*
FC_END */
/* 836 */
                                0x15,               /*
FC_STRUCT */
                                0x3,                /*
3 */
/* 838 */ NdrFcShort( 0x8 ),    /* 8 */
/* 840 */ 0x8,                  /* FC_LONG */
                                0x8,                /*
FC_LONG */
/* 842 */ 0x5c,                 /* FC_PAD */
                                0x5b,               /*
FC_END */
/* 844 */
                                0x1b,               /*
FC_CARRAY */
                                0x3,                /*
3 */
/* 846 */ NdrFcShort( 0x8 ),    /* 8 */
/* 848 */ 0x7,                  /* Corr desc: FC_USHORT
*/
                                0x0,                /*
*/
/* 850 */ NdrFcShort( 0xffd8 ),         /* -40 */
/* 852 */ 0x4c,                 /* FC_EMBEDDED_COMPLEX
*/
                                0x0,                /*
0 */
/* 854 */ NdrFcShort( 0xffffffee ),     /* Offset= -
18 (836) */
/* 856 */ 0x5c,                 /* FC_PAD */
                                0x5b,               /*
FC_END */
/* 858 */
                                0x1a,               /*
FC_BOGUS_STRUCT */
                                0x3,                /*
3 */
/* 860 */ NdrFcShort( 0x28 ), /* 40 */
/* 862 */ NdrFcShort( 0xffffffee ),     /* Offset= -
18 (844) */
/* 864 */ NdrFcShort( 0x0 ),    /* Offset= 0 (864) */
/* 866 */ 0x6,                  /* FC_SHORT */
                                0x6,                /*
FC_SHORT */
/* 868 */ 0x38,                 /* FC_ALIGNM4 */
```


©2005 Hewlett-Packard Company. All rights reserved.

```
                                0x8,                /*
FC_LONG */
/* 870 */ 0x8,                  /* FC_LONG */
                                0x4c,               /*
FC_EMBEDDED_COMPLEX */
/* 872 */ 0x0,                  /* 0 */
                                NdrFcShort( 0xfffffdf7
),        /* Offset= -521 (352) */
                                0x5b,               /*
FC_END */
/* 876 */
                                0x12, 0x0,          /*
FC_UP */
/* 878 */ NdrFcShort( 0xffffef6 ),     /* Offset= -
266 (612) */
/* 880 */
                                0x12, 0x8,          /*
FC_UP [simple_pointer] */
/* 882 */ 0x1,                  /* FC_BYTE */
                                0x5c,               /*
FC_PAD */
/* 884 */
                                0x12, 0x8,          /*
FC_UP [simple_pointer] */
/* 886 */ 0x6,                  /* FC_SHORT */
                                0x5c,               /*
FC_PAD */
/* 888 */
                                0x12, 0x8,          /*
FC_UP [simple_pointer] */
/* 890 */ 0x8,                  /* FC_LONG */
                                0x5c,               /*
FC_PAD */
/* 892 */
                                0x12, 0x8,          /*
FC_UP [simple_pointer] */
/* 894 */ 0xa,                  /* FC_FLOAT */
                                0x5c,               /*
FC_PAD */
/* 896 */
                                0x12, 0x8,          /*
FC_UP [simple_pointer] */
/* 898 */ 0xc,                  /* FC_DOUBLE */
                                0x5c,               /*
FC_PAD */
/* 900 */
                                0x12, 0x0,          /*
FC_UP */
/* 902 */ NdrFcShort( 0xfffffd90 ),     /* Offset= -
624 (278) */
/* 904 */
                                0x12, 0x10,         /*
FC_UP [pointer_deref] */
/* 906 */ NdrFcShort( 0xfffffd92 ),     /* Offset= -
622 (284) */
/* 908 */
                                0x12, 0x10,         /*
FC_UP [pointer_deref] */
/* 910 */ NdrFcShort( 0xfffffda6 ),     /* Offset= -
602 (308) */
/* 912 */
                                0x12, 0x10,         /*
FC_UP [pointer_deref] */
/* 914 */ NdrFcShort( 0xfffffdb4 ),     /* Offset= -
588 (326) */
/* 916 */
                                0x12, 0x10,         /*
FC_UP [pointer_deref] */
/* 918 */ NdrFcShort( 0xfffffdc2 ),     /* Offset= -
574 (344) */
/* 920 */
                                0x12, 0x10,         /*
FC_UP [pointer_deref] */
/* 922 */ NdrFcShort( 0x2 ),  /* Offset= 2 (924) */
/* 924 */
                                0x12, 0x0,          /*
FC_UP */
/* 926 */ NdrFcShort( 0x16 ), /* Offset= 22 (948) */
/* 928 */
                                0x15,               /*
FC_STRUCT */
                                0x7,                /*
7 */
/* 930 */ NdrFcShort( 0x10 ), /* 16 */
/* 932 */ 0x6,                  /* FC_SHORT */
                                0x1,                /*
FC_BYTE */
/* 934 */ 0x1,                  /* FC_BYTE */
                                0x38,               /*
FC_ALIGNM4 */
/* 936 */ 0x8,                  /* FC_LONG */
                                0x39,               /*
FC_ALIGNM8 */
/* 938 */ 0xb,                  /* FC_HYPER */
                                0x5b,               /*
FC_END */
/* 940 */
                                0x12, 0x0,          /*
FC_UP */
/* 942 */ NdrFcShort( 0xfffffff2 ),     /* Offset= -
14 (928) */
/* 944 */
                                0x12, 0x8,          /*
FC_UP [simple_pointer] */
/* 946 */ 0x2,                  /* FC_CHAR */
                                0x5c,               /*
FC_PAD */
/* 948 */
                                0x1a,               /*
FC_BOGUS_STRUCT */
                                0x7,                /*
7 */
/* 950 */ NdrFcShort( 0x20 ), /* 32 */
/* 952 */ NdrFcShort( 0x0 ),  /* 0 */
/* 954 */ NdrFcShort( 0x0 ),  /* Offset= 0 (954) */
/* 956 */ 0x8,                  /* FC_LONG */
                                0x8,                /*
FC_LONG */
/* 958 */ 0x6,                  /* FC_SHORT */
                                0x6,                /*
FC_SHORT */
/* 960 */ 0x6,                  /* FC_SHORT */
                                0x6,                /*
FC_SHORT */
/* 962 */ 0x4c,                 /* FC_EMBEDDED_COMPLEX
*/
                                0x0,                /*
0 */
/* 964 */ NdrFcShort( 0xfffffc42 ),     /* Offset= -
958 (6) */
/* 966 */ 0x5c,                 /* FC_PAD */
                                0x5b,               /*
FC_END */
/* 968 */ 0xb4,                 /* FC_USER_MARSHAL */
                                0x83,               /*
131 */
/* 970 */ NdrFcShort( 0x0 ),  /* 0 */
/* 972 */ NdrFcShort( 0x10 ), /* 16 */
/* 974 */ NdrFcShort( 0x0 ),  /* 0 */
/* 976 */ NdrFcShort( 0xfffffc32 ),     /* Offset= -
974 (2) */
/* 978 */
                                0x11, 0x4,          /*
FC_RP [alloced_on_stack] */
/* 980 */ NdrFcShort( 0x6 ),  /* Offset= 6 (986) */
/* 982 */
                                0x13, 0x0,          /*
FC_OP */
/* 984 */ NdrFcShort( 0xffffffdc ),     /* Offset= -
36 (948) */
/* 986 */ 0xb4,                 /* FC_USER_MARSHAL */
                                0x83,               /*
131 */
/* 988 */ NdrFcShort( 0x0 ),  /* 0 */
/* 990 */ NdrFcShort( 0x10 ), /* 16 */
/* 992 */ NdrFcShort( 0x0 ),  /* 0 */
/* 994 */ NdrFcShort( 0xfffffff4 ),     /* Offset= -
12 (982) */

                                0x0
        }
    };

const CInterfaceProxyVtbl *
_tpcc_com_ps_ProxyVtblList[] =
{
    ( CInterfaceProxyVtbl *) &_ITPCCProxyVtbl,
    0
};

const CInterfaceStubVtbl *
_tpcc_com_ps_StubVtblList[] =
{
    ( CInterfaceStubVtbl *) &_ITPCCStubVtbl,
    0
};

PCInterfaceName const
_tpcc_com_ps_InterfaceNamesList[] =
{
    "ITPCC",
    0
};


#define _tpcc_com_ps_CHECK_IID(n)
          IID_GENERIC_CHECK_IID( _tpcc_com_ps, pIID,
n)
```


©2005 Hewlett-Packard Company. All rights reserved.

```
int __stdcall _tpcc_com_ps_IID_Lookup( const IID *
pIID, int * pIndex )
{

    if(!_tpcc_com_ps_CHECK_IID(0))
        {
        *pIndex = 0;
        return 1;
        }

    return 0;
}

const ExtendedProxyFileInfo tpcc_com_ps_ProxyFileInfo
=
{
    (PCInterfaceProxyVtblList *) &
_tpcc_com_ps_ProxyVtblList,
    (PCInterfaceStubVtblList *) &
_tpcc_com_ps_StubVtblList,
    (const PCInterfaceName * ) &
_tpcc_com_ps_InterfaceNamesList,
    0, // no delegation
    & _tpcc_com_ps_IID_Lookup,
    1,
    2,
    0, /* table of [async_uuid] interfaces */
    0, /* Filler1 */
    0, /* Filler2 */
    0  /* Filler3 */
};


#endif /* !defined(_M_IA64) && !defined(_M_AXP64)*/


#pragma warning( disable: 4049 )  /* more than 64k
source lines */

/* this ALWAYS GENERATED file contains the proxy stub
code */


 /* File created by MIDL compiler version 5.03.0280
*/
/* at Thu Dec 13 23:13:08 2001
 */
/* Compiler settings for .\src\tpcc_com_ps.idl:
    Oicf (OptLev=i2), W1, Zp8, env=Win64 (32b
run,appending), ms_ext, c_ext, robust
    error checks: allocation ref bounds_check enum
stub_data
    VC __declspec() decoration level:
         __declspec(uuid()), __declspec(selectany),
__declspec(novtable)
         DECLSPEC_UUID(), MIDL_INTERFACE()
*/
//@@MIDL_FILE_HEADING(  )

#if defined(_M_IA64) || defined(_M_AXP64)
#define USE_STUBLESS_PROXY

/* verify that the <rpcproxy.h> version is high
enough to compile this file*/
#ifndef __REDQ_RPCPROXY_H_VERSION__
#define __REQUIRED_RPCPROXY_H_VERSION__ 475
#endif


#include "rpcproxy.h"
#ifndef __RPCPROXY_H_VERSION__
#error this stub requires an updated version of
<rpcproxy.h>
#endif // __RPCPROXY_H_VERSION__


#include "tpcc_com_ps.h"

#define TYPE_FORMAT_STRING_SIZE   979
#define PROC_FORMAT_STRING_SIZE   253
#define TRANSMIT_AS_TABLE_SIZE    0
#define WIRE_MARSHAL_TABLE_SIZE   1

typedef struct _MIDL_TYPE_FORMAT_STRING
    {
    short          Pad;
    unsigned char  Format[ TYPE_FORMAT_STRING_SIZE ];
    } MIDL_TYPE_FORMAT_STRING;

typedef struct _MIDL_PROC_FORMAT_STRING
    {
    short          Pad;
    unsigned char  Format[ PROC_FORMAT_STRING_SIZE ];
    } MIDL_PROC_FORMAT_STRING;


extern const MIDL_TYPE_FORMAT_STRING
__MIDL_TypeFormatString;
extern const MIDL_PROC_FORMAT_STRING
__MIDL_ProcFormatString;


/* Standard interface: __MIDL_itf_tpcc_com_ps_0000,
ver. 0.0,

GUID={0x00000000,0x0000,0x0000,{0x00,0x00,0x00,0x00,0
x00,0x00,0x00,0x00}} */


/* Object interface: IUnknown, ver. 0.0,

GUID={0x00000000,0x0000,0x0000,{0xC0,0x00,0x00,0x00,0
x00,0x00,0x00,0x46}} */


/* Object interface: ITPCC, ver. 0.0,

GUID={0xFEEE6AA2,0x84B1,0x11d2,{0xBA,0x47,0x00,0xC0,0
x4F,0xBF,0xE0,0x8B}} */


extern const MIDL_STUB_DESC Object_StubDesc;


extern const MIDL_SERVER_INFO ITPCC_ServerInfo;

#pragma code_seg(".orpc")
static const unsigned short
ITPCC_FormatStringOffsetTable[] =
    {
    0,
    44,
    88,
    132,
    176,
    220
    };

static const MIDL_SERVER_INFO ITPCC_ServerInfo =
    {
    &Object_StubDesc,
    0,
    __MIDL_ProcFormatString.Format,
    &ITPCC_FormatStringOffsetTable[-3],
    0,
    0,
    0,
    0
    };

static const MIDL_STUBLESS_PROXY_INFO ITPCC_ProxyInfo
=
    {
    &Object_StubDesc,
    __MIDL_ProcFormatString.Format,
    &ITPCC_FormatStringOffsetTable[-3],
    0,
    0,
    0
    };

CINTERFACE_PROXY_VTABLE(9) _ITPCCProxyVtbl =
{
    &ITPCC_ProxyInfo,
    &IID_ITPCC,
    IUnknown_QueryInterface_Proxy,
    IUnknown_AddRef_Proxy,
    IUnknown_Release_Proxy ,
    (void *)-1 /* ITPCC::NewOrder */ ,
    (void *)-1 /* ITPCC::Payment */ ,
    (void *)-1 /* ITPCC::Delivery */ ,
    (void *)-1 /* ITPCC::StockLevel */ ,
    (void *)-1 /* ITPCC::OrderStatus */ ,
    (void *)-1 /* ITPCC::CallSetComplete */
};

const CInterfaceStubVtbl _ITPCCStubVtbl =
{
    &IID_ITPCC,
    &ITPCC_ServerInfo,
    9,
    0, /* pure interpreted */
    CStdStubBuffer_METHODS
};

extern const USER_MARSHAL_ROUTINE_QUADRUPLE
UserMarshalRoutines[ WIRE_MARSHAL_TABLE_SIZE ];
```


©2005 Hewlett-Packard Company. All rights reserved.

```
static const MIDL_STUB_DESC Object_StubDesc =
    {
    0,
    NdrOleAllocate,
    NdrOleFree,
    0,
    0,
    0,
    0,
    0,
    __MIDL_TypeFormatString.Format,
    1, /* -error bounds_check flag */
    0x50002, /* Ndr library version */
    0,
    0x5030118, /* MIDL Version 5.3.280 */
    0,
    UserMarshalRoutines,
    0,  /* notify & notify_flag routine table */
    0x1, /* MIDL flag */
    0,  /* Reserved3 */
    0,  /* Reserved4 */
    0   /* Reserved5 */
    };

#pragma data_seg(".rdata")

static const USER_MARSHAL_ROUTINE_QUADRUPLE
UserMarshalRoutines[ WIRE_MARSHAL_TABLE_SIZE ] =
        {

            {
            VARIANT_UserSize
            ,VARIANT_UserMarshal
            ,VARIANT_UserUnmarshal
            ,VARIANT_UserFree
            }

        };


#if !defined(__RPC_WIN64__)
#error  Invalid build platform for this stub.
#endif

static const MIDL_PROC_FORMAT_STRING
__MIDL_ProcFormatString =
    {
        0,
        {

          /* Procedure NewOrder */

                                0x33,               /*
FC_AUTO_HANDLE */
                                0x6c,               /*
Old Flags:  object, Oi2 */
/*  2 */  NdrFcLong( 0x0 ),   /* 0 */
/*  6 */  NdrFcShort( 0x3 ),  /* 3 */
#ifndef _ALPHA_
/*  8 */  NdrFcShort( 0x38 ), /* ia64 Stack
size/offset = 56 */
#else
                                NdrFcShort( 0x30 ), /*
axp64 Stack size/offset = 48 */
#endif
/* 10 */  NdrFcShort( 0x0 ),  /* 0 */
/* 12 */  NdrFcShort( 0x8 ),  /* 8 */
/* 14 */  0x47,               /* Oi2 Flags:  srv must
size, clt must size, has return, has ext, */
                                0x3,                /*
3 */
/* 16 */  0xa,                /* 10 */
                                0x7,                /*
Ext Flags:  new corr desc, clt corr check, srv corr
check, */
/* 18 */  NdrFcShort( 0x20 ), /* 32 */
/* 20 */  NdrFcShort( 0x20 ), /* 32 */
/* 22 */  NdrFcShort( 0x0 ),  /* 0 */
/* 24 */  NdrFcShort( 0x0 ),  /* 0 */

          /* Parameter txn_in */

/* 26 */  NdrFcShort( 0x8b ), /* Flags:  must size,
must free, in, by val, */
#ifndef _ALPHA_
/* 28 */  NdrFcShort( 0x10 ), /* ia64 Stack
size/offset = 16 */
#else
                                NdrFcShort( 0x8 ),  /*
axp64 Stack size/offset = 8 */
#endif
/* 30 */  NdrFcShort( 0x3b6 ),          /* Type
Offset=950 */

          /* Parameter txn_out */

/* 32 */  NdrFcShort( 0x6113 ),         /* Flags:
must size, must free, out, simple ref, srv alloc
size=24 */
#ifndef _ALPHA_
/* 34 */  NdrFcShort( 0x28 ), /* ia64 Stack
size/offset = 40 */
#else
                                NdrFcShort( 0x20 ), /*
axp64 Stack size/offset = 32 */
#endif
/* 36 */  NdrFcShort( 0x3c8 ),          /* Type
Offset=968 */

          /* Return value */

/* 38 */  NdrFcShort( 0x70 ), /* Flags:  out, return,
base type, */
#ifndef _ALPHA_
/* 40 */  NdrFcShort( 0x30 ), /* ia64 Stack
size/offset = 48 */
#else
                                NdrFcShort( 0x28 ), /*
axp64 Stack size/offset = 40 */
#endif
/* 42 */  0x8,                /* FC_LONG */
                                0x0,                /*
0 */

          /* Procedure Payment */

/* 44 */  0x33,               /* FC_AUTO_HANDLE */
                                0x6c,               /*
Old Flags:  object, Oi2 */
/* 46 */  NdrFcLong( 0x0 ),   /* 0 */
/* 50 */  NdrFcShort( 0x4 ),  /* 4 */
#ifndef _ALPHA_
/* 52 */  NdrFcShort( 0x38 ), /* ia64 Stack
size/offset = 56 */
#else
                                NdrFcShort( 0x30 ), /*
axp64 Stack size/offset = 48 */
#endif
/* 54 */  NdrFcShort( 0x0 ),  /* 0 */
/* 56 */  NdrFcShort( 0x8 ),  /* 8 */
/* 58 */  0x47,               /* Oi2 Flags:  srv must
size, clt must size, has return, has ext, */
                                0x3,                /*
3 */
/* 60 */  0xa,                /* 10 */
                                0x7,                /*
Ext Flags:  new corr desc, clt corr check, srv corr
check, */
/* 62 */  NdrFcShort( 0x20 ), /* 32 */
/* 64 */  NdrFcShort( 0x20 ), /* 32 */
/* 66 */  NdrFcShort( 0x0 ),  /* 0 */
/* 68 */  NdrFcShort( 0x0 ),  /* 0 */

          /* Parameter txn_in */

/* 70 */  NdrFcShort( 0x8b ), /* Flags:  must size,
must free, in, by val, */
#ifndef _ALPHA_
/* 72 */  NdrFcShort( 0x10 ), /* ia64 Stack
size/offset = 16 */
#else
                                NdrFcShort( 0x8 ),  /*
axp64 Stack size/offset = 8 */
#endif
/* 74 */  NdrFcShort( 0x3b6 ),          /* Type
Offset=950 */

          /* Parameter txn_out */

/* 76 */  NdrFcShort( 0x6113 ),         /* Flags:
must size, must free, out, simple ref, srv alloc
size=24 */
#ifndef _ALPHA_
/* 78 */  NdrFcShort( 0x28 ), /* ia64 Stack
size/offset = 40 */
#else
                                NdrFcShort( 0x20 ), /*
axp64 Stack size/offset = 32 */
#endif
/* 80 */  NdrFcShort( 0x3c8 ),          /* Type
Offset=968 */

          /* Return value */

/* 82 */  NdrFcShort( 0x70 ), /* Flags:  out, return,
base type, */
#ifndef _ALPHA_
```


©2005 Hewlett-Packard Company. All rights reserved.

```
/* 84 */  NdrFcShort( 0x30 ), /* ia64 Stack
size/offset = 48 */
#else
                                NdrFcShort( 0x28 ), /*
axp64 Stack size/offset = 40 */
#endif
/* 86 */  0x8,                  /* FC_LONG */
                                0x0,                /*
0 */

          /* Procedure Delivery */

/* 88 */  0x33,                 /* FC_AUTO_HANDLE */
                                0x6c,               /*
Old Flags:  object, Oi2 */
/* 90 */  NdrFcLong( 0x0 ),     /* 0 */
/* 94 */  NdrFcShort( 0x5 ),    /* 5 */
#ifndef _ALPHA_
/* 96 */  NdrFcShort( 0x38 ), /* ia64 Stack
size/offset = 56 */
#else
                                NdrFcShort( 0x30 ), /*
axp64 Stack size/offset = 48 */
#endif
/* 98 */  NdrFcShort( 0x0 ),    /* 0 */
/* 100 */ NdrFcShort( 0x8 ),    /* 8 */
/* 102 */ 0x47,                 /* Oi2 Flags:  srv must
size, clt must size, has return, has ext, */
                                0x3,                /*
3 */
/* 104 */ 0xa,                  /* 10 */
                                0x7,                /*
Ext Flags:  new corr desc, clt corr check, srv corr
check, */
/* 106 */ NdrFcShort( 0x20 ), /* 32 */
/* 108 */ NdrFcShort( 0x20 ), /* 32 */
/* 110 */ NdrFcShort( 0x0 ),    /* 0 */
/* 112 */ NdrFcShort( 0x0 ),    /* 0 */

          /* Parameter txn_in */

/* 114 */ NdrFcShort( 0x8b ), /* Flags:  must size,
must free, in, by val, */
#ifndef _ALPHA_
/* 116 */ NdrFcShort( 0x10 ), /* ia64 Stack
size/offset = 16 */
#else
                                NdrFcShort( 0x8 ),  /*
axp64 Stack size/offset = 8 */
#endif
/* 118 */ NdrFcShort( 0x3b6 ),          /* Type
Offset=950 */

          /* Parameter txn_out */

/* 120 */ NdrFcShort( 0x6113 ),         /* Flags:
must size, must free, out, simple ref, srv alloc
size=24 */
#ifndef _ALPHA_
/* 122 */ NdrFcShort( 0x28 ), /* ia64 Stack
size/offset = 40 */
#else
                                NdrFcShort( 0x20 ), /*
axp64 Stack size/offset = 32 */
#endif
/* 124 */ NdrFcShort( 0x3c8 ),          /* Type
Offset=968 */

          /* Return value */

/* 126 */ NdrFcShort( 0x70 ), /* Flags:  out, return,
base type, */
#ifndef _ALPHA_
/* 128 */ NdrFcShort( 0x30 ), /* ia64 Stack
size/offset = 48 */
#else
                                NdrFcShort( 0x28 ), /*
axp64 Stack size/offset = 40 */
#endif
/* 130 */ 0x8,                  /* FC_LONG */
                                0x0,                /*
0 */

          /* Procedure StockLevel */

/* 132 */ 0x33,                 /* FC_AUTO_HANDLE */
                                0x6c,               /*
Old Flags:  object, Oi2 */
/* 134 */ NdrFcLong( 0x0 ),     /* 0 */
/* 138 */ NdrFcShort( 0x6 ),    /* 6 */
#ifndef _ALPHA_
/* 140 */ NdrFcShort( 0x38 ), /* ia64 Stack
size/offset = 56 */
#else
                                NdrFcShort( 0x30 ), /*
axp64 Stack size/offset = 48 */
#endif
/* 142 */ NdrFcShort( 0x0 ),    /* 0 */
/* 144 */ NdrFcShort( 0x8 ),    /* 8 */
/* 146 */ 0x47,                 /* Oi2 Flags:  srv must
size, clt must size, has return, has ext, */
                                0x3,                /*
3 */
/* 148 */ 0xa,                  /* 10 */
                                0x7,                /*
Ext Flags:  new corr desc, clt corr check, srv corr
check, */
/* 150 */ NdrFcShort( 0x20 ), /* 32 */
/* 152 */ NdrFcShort( 0x20 ), /* 32 */
/* 154 */ NdrFcShort( 0x0 ),    /* 0 */
/* 156 */ NdrFcShort( 0x0 ),    /* 0 */

          /* Parameter txn_in */

/* 158 */ NdrFcShort( 0x8b ), /* Flags:  must size,
must free, in, by val, */
#ifndef _ALPHA_
/* 160 */ NdrFcShort( 0x10 ), /* ia64 Stack
size/offset = 16 */
#else
                                NdrFcShort( 0x8 ),  /*
axp64 Stack size/offset = 8 */
#endif
/* 162 */ NdrFcShort( 0x3b6 ),          /* Type
Offset=950 */

          /* Parameter txn_out */

/* 164 */ NdrFcShort( 0x6113 ),         /* Flags:
must size, must free, out, simple ref, srv alloc
size=24 */
#ifndef _ALPHA_
/* 166 */ NdrFcShort( 0x28 ), /* ia64 Stack
size/offset = 40 */
#else
                                NdrFcShort( 0x20 ), /*
axp64 Stack size/offset = 32 */
#endif
/* 168 */ NdrFcShort( 0x3c8 ),          /* Type
Offset=968 */

          /* Return value */

/* 170 */ NdrFcShort( 0x70 ), /* Flags:  out, return,
base type, */
#ifndef _ALPHA_
/* 172 */ NdrFcShort( 0x30 ), /* ia64 Stack
size/offset = 48 */
#else
                                NdrFcShort( 0x28 ), /*
axp64 Stack size/offset = 40 */
#endif
/* 174 */ 0x8,                  /* FC_LONG */
                                0x0,                /*
0 */

          /* Procedure OrderStatus */

/* 176 */ 0x33,                 /* FC_AUTO_HANDLE */
                                0x6c,               /*
Old Flags:  object, Oi2 */
/* 178 */ NdrFcLong( 0x0 ),     /* 0 */
/* 182 */ NdrFcShort( 0x7 ),    /* 7 */
#ifndef _ALPHA_
/* 184 */ NdrFcShort( 0x38 ), /* ia64 Stack
size/offset = 56 */
#else
                                NdrFcShort( 0x30 ), /*
axp64 Stack size/offset = 48 */
#endif
/* 186 */ NdrFcShort( 0x0 ),    /* 0 */
/* 188 */ NdrFcShort( 0x8 ),    /* 8 */
/* 190 */ 0x47,                 /* Oi2 Flags:  srv must
size, clt must size, has return, has ext, */
                                0x3,                /*
3 */
/* 192 */ 0xa,                  /* 10 */
                                0x7,                /*
Ext Flags:  new corr desc, clt corr check, srv corr
check, */
/* 194 */ NdrFcShort( 0x20 ), /* 32 */
/* 196 */ NdrFcShort( 0x20 ), /* 32 */
/* 198 */ NdrFcShort( 0x0 ),    /* 0 */
/* 200 */ NdrFcShort( 0x0 ),    /* 0 */

          /* Parameter txn_in */
```


©2005 Hewlett-Packard Company. All rights reserved.

```
/* 202 */ NdrFcShort( 0x8b ), /* Flags:  must size,
must free, in, by val, */
#ifndef _ALPHA_
/* 204 */ NdrFcShort( 0x10 ), /* ia64 Stack
size/offset = 16 */
#else
                              NdrFcShort( 0x8 ),  /*
axp64 Stack size/offset = 8 */
#endif
/* 206 */ NdrFcShort( 0x3b6 ),          /* Type
Offset=950 */

          /* Parameter txn_out */

/* 208 */ NdrFcShort( 0x6113 ),         /* Flags:
must size, must free, out, simple ref, srv alloc
size=24 */
#ifndef _ALPHA_
/* 210 */ NdrFcShort( 0x28 ), /* ia64 Stack
size/offset = 40 */
#else
                              NdrFcShort( 0x20 ), /*
axp64 Stack size/offset = 32 */
#endif
/* 212 */ NdrFcShort( 0x3c8 ),          /* Type
Offset=968 */

          /* Return value */

/* 214 */ NdrFcShort( 0x70 ), /* Flags:  out, return,
base type, */
#ifndef _ALPHA_
/* 216 */ NdrFcShort( 0x30 ), /* ia64 Stack
size/offset = 48 */
#else
                              NdrFcShort( 0x28 ), /*
axp64 Stack size/offset = 40 */
#endif
/* 218 */ 0x8,                /* FC_LONG */
                              0x0,                /*
0 */

          /* Procedure CallSetComplete */

/* 220 */ 0x33,               /* FC_AUTO_HANDLE */
                              0x6c,               /*
Old Flags:  object, Oi2 */
/* 222 */ NdrFcLong( 0x0 ),   /* 0 */
/* 226 */ NdrFcShort( 0x8 ),  /* 8 */
/* 228 */ NdrFcShort( 0x10 ), /* ia64, axp64 Stack
size/offset = 16 */
/* 230 */ NdrFcShort( 0x0 ),  /* 0 */
/* 232 */ NdrFcShort( 0x8 ),  /* 8 */
/* 234 */ 0x44,               /* Oi2 Flags:  has
return, has ext, */
                              0x1,                /*
1 */
/* 236 */ 0xa,                /* 10 */
                              0x1,                /*
Ext Flags:  new corr desc, */
/* 238 */ NdrFcShort( 0x0 ),  /* 0 */
/* 240 */ NdrFcShort( 0x0 ),  /* 0 */
/* 242 */ NdrFcShort( 0x0 ),  /* 0 */
/* 244 */ NdrFcShort( 0x0 ),  /* 0 */

          /* Return value */

/* 246 */ NdrFcShort( 0x70 ), /* Flags:  out, return,
base type, */
/* 248 */ NdrFcShort( 0x8 ),  /* ia64, axp64 Stack
size/offset = 8 */
/* 250 */ 0x8,                /* FC_LONG */
                              0x0,                /*
0 */

                              0x0
        }
    };

static const MIDL_TYPE_FORMAT_STRING
__MIDL_TypeFormatString =
    {
        0,
        {
                              NdrFcShort( 0x0 ),  /*
0 */
/*  2 */
                              0x12, 0x0,          /*
FC_UP */
/*  4 */  NdrFcShort( 0x39e ),          /* Offset=
926 (930) */
/*  6 */
                              0x2b,               /*
FC_NON_ENCAPSULATED_UNION */
                              0x9,                /*
FC_ULONG */
/*  8 */  0x7,                /* Corr desc: FC_USHORT
*/
                              0x0,                /*
*/
/* 10 */  NdrFcShort( 0xfff8 ),         /* -8 */
/* 12 */  NdrFcShort( 0x1 ),  /* Corr flags:  early,
*/
/* 14 */  NdrFcShort( 0x2 ),  /* Offset= 2 (16) */
/* 16 */  NdrFcShort( 0x10 ), /* 16 */
/* 18 */  NdrFcShort( 0x2b ), /* 43 */
/* 20 */  NdrFcLong( 0x3 ),   /* 3 */
/* 24 */  NdrFcShort( 0x8008 ),         /* Simple arm
type: FC_LONG */
/* 26 */  NdrFcLong( 0x11 ),  /* 17 */
/* 30 */  NdrFcShort( 0x8001 ),         /* Simple arm
type: FC_BYTE */
/* 32 */  NdrFcLong( 0x2 ),   /* 2 */
/* 36 */  NdrFcShort( 0x8006 ),         /* Simple arm
type: FC_SHORT */
/* 38 */  NdrFcLong( 0x4 ),   /* 4 */
/* 42 */  NdrFcShort( 0x800a ),         /* Simple arm
type: FC_FLOAT */
/* 44 */  NdrFcLong( 0x5 ),   /* 5 */
/* 48 */  NdrFcShort( 0x800c ),         /* Simple arm
type: FC_DOUBLE */
/* 50 */  NdrFcLong( 0xb ),   /* 11 */
/* 54 */  NdrFcShort( 0x8006 ),         /* Simple arm
type: FC_SHORT */
/* 56 */  NdrFcLong( 0xa ),   /* 10 */
/* 60 */  NdrFcShort( 0x8008 ),         /* Simple arm
type: FC_LONG */
/* 62 */  NdrFcLong( 0x6 ),   /* 6 */
/* 66 */  NdrFcShort( 0xd6 ), /* Offset= 214 (280) */
/* 68 */  NdrFcLong( 0x7 ),   /* 7 */
/* 72 */  NdrFcShort( 0x800c ),         /* Simple arm
type: FC_DOUBLE */
/* 74 */  NdrFcLong( 0x8 ),   /* 8 */
/* 78 */  NdrFcShort( 0xd0 ), /* Offset= 208 (286) */
/* 80 */  NdrFcLong( 0xd ),   /* 13 */
/* 84 */  NdrFcShort( 0xe4 ), /* Offset= 228 (312) */
/* 86 */  NdrFcLong( 0x9 ),   /* 9 */
/* 90 */  NdrFcShort( 0xf0 ), /* Offset= 240 (330) */
/* 92 */  NdrFcLong( 0x2000 ),          /* 8192 */
/* 96 */  NdrFcShort( 0xfc ), /* Offset= 252 (348) */
/* 98 */  NdrFcLong( 0x24 ),  /* 36 */
/* 102 */ NdrFcShort( 0x2f4 ),          /* Offset=
756 (858) */
/* 104 */ NdrFcLong( 0x4024 ),          /* 16420 */
/* 108 */ NdrFcShort( 0x2ee ),          /* Offset=
750 (858) */
/* 110 */ NdrFcLong( 0x4011 ),          /* 16401 */
/* 114 */ NdrFcShort( 0x2ec ),          /* Offset=
748 (862) */
/* 116 */ NdrFcLong( 0x4002 ),          /* 16386 */
/* 120 */ NdrFcShort( 0x2ea ),          /* Offset=
746 (866) */
/* 122 */ NdrFcLong( 0x4003 ),          /* 16387 */
/* 126 */ NdrFcShort( 0x2e8 ),          /* Offset=
744 (870) */
/* 128 */ NdrFcLong( 0x4004 ),          /* 16388 */
/* 132 */ NdrFcShort( 0x2e6 ),          /* Offset=
742 (874) */
/* 134 */ NdrFcLong( 0x4005 ),          /* 16389 */
/* 138 */ NdrFcShort( 0x2e4 ),          /* Offset=
740 (878) */
/* 140 */ NdrFcLong( 0x400b ),          /* 16395 */
/* 144 */ NdrFcShort( 0x2d2 ),          /* Offset=
722 (866) */
/* 146 */ NdrFcLong( 0x400a ),          /* 16394 */
/* 150 */ NdrFcShort( 0x2d0 ),          /* Offset=
720 (870) */
/* 152 */ NdrFcLong( 0x4006 ),          /* 16390 */
/* 156 */ NdrFcShort( 0x2d6 ),          /* Offset=
726 (882) */
/* 158 */ NdrFcLong( 0x4007 ),          /* 16391 */
/* 162 */ NdrFcShort( 0x2cc ),          /* Offset=
716 (878) */
/* 164 */ NdrFcLong( 0x4008 ),          /* 16392 */
/* 168 */ NdrFcShort( 0x2ce ),          /* Offset=
718 (886) */
/* 170 */ NdrFcLong( 0x400d ),          /* 16397 */
/* 174 */ NdrFcShort( 0x2cc ),          /* Offset=
716 (890) */
/* 176 */ NdrFcLong( 0x4009 ),          /* 16393 */
/* 180 */ NdrFcShort( 0x2ca ),          /* Offset=
714 (894) */
/* 182 */ NdrFcLong( 0x6000 ),          /* 24576 */
/* 186 */ NdrFcShort( 0x2c8 ),          /* Offset=
712 (898) */
/* 188 */ NdrFcLong( 0x400c ),          /* 16396 */
/* 192 */ NdrFcShort( 0x2c6 ),          /* Offset=
710 (902) */
```


©2005 Hewlett-Packard Company. All rights reserved.

```
/* 194 */ NdrFcLong( 0x10 ),  /* 16 */
/* 198 */ NdrFcShort( 0x8002 ),         /* Simple arm
type: FC_CHAR */
/* 200 */ NdrFcLong( 0x12 ),  /* 18 */
/* 204 */ NdrFcShort( 0x8006 ),         /* Simple arm
type: FC_SHORT */
/* 206 */ NdrFcLong( 0x13 ),  /* 19 */
/* 210 */ NdrFcShort( 0x8008 ),         /* Simple arm
type: FC_LONG */
/* 212 */ NdrFcLong( 0x16 ),  /* 22 */
/* 216 */ NdrFcShort( 0x8008 ),         /* Simple arm
type: FC_LONG */
/* 218 */ NdrFcLong( 0x17 ),  /* 23 */
/* 222 */ NdrFcShort( 0x8008 ),         /* Simple arm
type: FC_LONG */
/* 224 */ NdrFcLong( 0xe ),   /* 14 */
/* 228 */ NdrFcShort( 0x2aa ),          /* Offset=
682 (910) */
/* 230 */ NdrFcLong( 0x400e ),          /* 16398 */
/* 234 */ NdrFcShort( 0x2b0 ),          /* Offset=
688 (922) */
/* 236 */ NdrFcLong( 0x4010 ),          /* 16400 */
/* 240 */ NdrFcShort( 0x2ae ),          /* Offset=
686 (926) */
/* 242 */ NdrFcLong( 0x4012 ),          /* 16402 */
/* 246 */ NdrFcShort( 0x26c ),          /* Offset=
620 (866) */
/* 248 */ NdrFcLong( 0x4013 ),          /* 16403 */
/* 252 */ NdrFcShort( 0x26a ),          /* Offset=
618 (870) */
/* 254 */ NdrFcLong( 0x4016 ),          /* 16406 */
/* 258 */ NdrFcShort( 0x264 ),          /* Offset=
612 (870) */
/* 260 */ NdrFcLong( 0x4017 ),          /* 16407 */
/* 264 */ NdrFcShort( 0x25e ),          /* Offset=
606 (870) */
/* 266 */ NdrFcLong( 0x0 ),   /* 0 */
/* 270 */ NdrFcShort( 0x0 ),  /* Offset= 0 (270) */
/* 272 */ NdrFcLong( 0x1 ),   /* 1 */
/* 276 */ NdrFcShort( 0x0 ),  /* Offset= 0 (276) */
/* 278 */ NdrFcShort( 0xffffffff ),     /* Offset= -1
(277) */
/* 280 */
                                0x15,               /*
FC_STRUCT */
                                0x7,                /*
7 */
/* 282 */ NdrFcShort( 0x8 ),  /* 8 */
/* 284 */ 0xb,                /* FC_HYPER */
                                0x5b,               /*
FC_END */
/* 286 */
                                0x12, 0x0,          /*
FC_UP */
/* 288 */ NdrFcShort( 0xe ),  /* Offset= 14 (302) */
/* 290 */
                                0x1b,               /*
FC_CARRAY */
                                0x1,                /*
1 */
/* 292 */ NdrFcShort( 0x2 ),  /* 2 */
/* 294 */ 0x9,                /* Corr desc: FC_ULONG
*/
                                0x0,                /*
*/
/* 296 */ NdrFcShort( 0xfffc ),         /* -4 */
/* 298 */ NdrFcShort( 0x1 ),  /* Corr flags:  early,
*/
/* 300 */ 0x6,                /* FC_SHORT */
                                0x5b,               /*
FC_END */
/* 302 */
                                0x17,               /*
FC_CSTRUCT */
                                0x3,                /*
3 */
/* 304 */ NdrFcShort( 0x8 ),  /* 8 */
/* 306 */ NdrFcShort( 0xfffffff0 ),     /* Offset= -
16 (290) */
/* 308 */ 0x8,                /* FC_LONG */
                                0x8,                /*
FC_LONG */
/* 310 */ 0x5c,               /* FC_PAD */
                                0x5b,               /*
FC_END */
/* 312 */
                                0x2f,               /*
FC_IP */
                                0x5a,               /*
FC_CONSTANT_IID */
/* 314 */ NdrFcLong( 0x0 ),   /* 0 */
/* 318 */ NdrFcShort( 0x0 ),  /* 0 */
/* 320 */ NdrFcShort( 0x0 ),  /* 0 */
/* 322 */ 0xc0,               /* 192 */
                                0x0,                /*
0 */
/* 324 */ 0x0,                /* 0 */
                                0x0,                /*
0 */
/* 326 */ 0x0,                /* 0 */
                                0x0,                /*
0 */
/* 328 */ 0x0,                /* 0 */
                                0x46,               /*
70 */
/* 330 */
                                0x2f,               /*
FC_IP */
                                0x5a,               /*
FC_CONSTANT_IID */
/* 332 */ NdrFcLong( 0x20400 ),         /* 132096 */
/* 336 */ NdrFcShort( 0x0 ),  /* 0 */
/* 338 */ NdrFcShort( 0x0 ),  /* 0 */
/* 340 */ 0xc0,               /* 192 */
                                0x0,                /*
0 */
/* 342 */ 0x0,                /* 0 */
                                0x0,                /*
0 */
/* 344 */ 0x0,                /* 0 */
                                0x0,                /*
0 */
/* 346 */ 0x0,                /* 0 */
                                0x46,               /*
70 */
/* 348 */
                                0x12, 0x10,         /*
FC_UP [pointer_deref] */
/* 350 */ NdrFcShort( 0x2 ),  /* Offset= 2 (352) */
/* 352 */
                                0x12, 0x0,          /*
FC_UP */
/* 354 */ NdrFcShort( 0x1e6 ),          /* Offset=
486 (840) */
/* 356 */
                                0x2a,               /*
FC_ENCAPSULATED_UNION */
                                0x89,               /*
137 */
/* 358 */ NdrFcShort( 0x20 ), /* 32 */
/* 360 */ NdrFcShort( 0xa ),  /* 10 */
/* 362 */ NdrFcLong( 0x8 ),   /* 8 */
/* 366 */ NdrFcShort( 0x50 ), /* Offset= 80 (446) */
/* 368 */ NdrFcLong( 0xd ),   /* 13 */
/* 372 */ NdrFcShort( 0x70 ), /* Offset= 112 (484) */
/* 374 */ NdrFcLong( 0x9 ),   /* 9 */
/* 378 */ NdrFcShort( 0x90 ), /* Offset= 144 (522) */
/* 380 */ NdrFcLong( 0xc ),   /* 12 */
/* 384 */ NdrFcShort( 0xb0 ), /* Offset= 176 (560) */
/* 386 */ NdrFcLong( 0x24 ),  /* 36 */
/* 390 */ NdrFcShort( 0x104 ),          /* Offset=
260 (650) */
/* 392 */ NdrFcLong( 0x800d ),          /* 32781 */
/* 396 */ NdrFcShort( 0x120 ),          /* Offset=
288 (684) */
/* 398 */ NdrFcLong( 0x10 ),  /* 16 */
/* 402 */ NdrFcShort( 0x13a ),          /* Offset=
314 (716) */
/* 404 */ NdrFcLong( 0x2 ),   /* 2 */
/* 408 */ NdrFcShort( 0x150 ),          /* Offset=
336 (744) */
/* 410 */ NdrFcLong( 0x3 ),   /* 3 */
/* 414 */ NdrFcShort( 0x166 ),          /* Offset=
358 (772) */
/* 416 */ NdrFcLong( 0x14 ),  /* 20 */
/* 420 */ NdrFcShort( 0x17c ),          /* Offset=
380 (800) */
/* 422 */ NdrFcShort( 0xffffffff ),     /* Offset= -1
(421) */
/* 424 */
                                0x21,               /*
FC_BOGUS_ARRAY */
                                0x3,                /*
3 */
/* 426 */ NdrFcShort( 0x0 ),  /* 0 */
/* 428 */ 0x19,               /* Corr desc:  field
pointer, FC_ULONG */
                                0x0,                /*
*/
/* 430 */ NdrFcShort( 0x0 ),  /* 0 */
/* 432 */ NdrFcShort( 0x1 ),  /* Corr flags:  early,
*/
/* 434 */ NdrFcLong( 0xffffffff ),      /* -1 */
/* 438 */ NdrFcShort( 0x0 ),  /* Corr flags:  */
/* 440 */
                                0x12, 0x0,          /*
FC_UP */
/* 442 */ NdrFcShort( 0xffffff74 ),     /* Offset= -
140 (302) */
```


©2005 Hewlett-Packard Company. All rights reserved.

```
/* 444 */ 0x5c,                /* FC_PAD */
                               0x5b,                /*
FC_END */
/* 446 */
                               0x1a,                /*
FC_BOGUS_STRUCT */
                               0x3,                 /*
3 */
/* 448 */ NdrFcShort( 0x10 ), /* 16 */
/* 450 */ NdrFcShort( 0x0 ),  /* 0 */
/* 452 */ NdrFcShort( 0x6 ),  /* Offset= 6 (458) */
/* 454 */ 0x8,                /* FC_LONG */
                               0x39,                /*
FC_ALIGNM8 */
/* 456 */ 0x36,               /* FC_POINTER */
                               0x5b,                /*
FC_END */
/* 458 */
                               0x11, 0x0,           /*
FC_RP */
/* 460 */ NdrFcShort( 0xffffffdc ),     /* Offset= -
36 (424) */
/* 462 */
                               0x21,                /*
FC_BOGUS_ARRAY */
                               0x3,                 /*
3 */
/* 464 */ NdrFcShort( 0x0 ),  /* 0 */
/* 466 */ 0x19,               /* Corr desc:  field
pointer, FC_ULONG */
                               0x0,                 /*
*/
/* 468 */ NdrFcShort( 0x0 ),  /* 0 */
/* 470 */ NdrFcShort( 0x1 ),  /* Corr flags:  early,
*/
/* 472 */ NdrFcLong( 0xffffffff ),      /* -1 */
/* 476 */ NdrFcShort( 0x0 ),  /* Corr flags:  */
/* 478 */ 0x4c,               /* FC_EMBEDDED_COMPLEX
*/
                               0x0,                 /*
0 */
/* 480 */ NdrFcShort( 0xffffff58 ),     /* Offset= -
168 (312) */
/* 482 */ 0x5c,               /* FC_PAD */
                               0x5b,                /*
FC_END */
/* 484 */
                               0x1a,                /*
FC_BOGUS_STRUCT */
                               0x3,                 /*
3 */
/* 486 */ NdrFcShort( 0x10 ), /* 16 */
/* 488 */ NdrFcShort( 0x0 ),  /* 0 */
/* 490 */ NdrFcShort( 0x6 ),  /* Offset= 6 (496) */
/* 492 */ 0x8,                /* FC_LONG */
                               0x39,                /*
FC_ALIGNM8 */
/* 494 */ 0x36,               /* FC_POINTER */
                               0x5b,                /*
FC_END */
/* 496 */
                               0x11, 0x0,           /*
FC_RP */
/* 498 */ NdrFcShort( 0xffffffdc ),     /* Offset= -
36 (462) */
/* 500 */
                               0x21,                /*
FC_BOGUS_ARRAY */
                               0x3,                 /*
3 */
/* 502 */ NdrFcShort( 0x0 ),  /* 0 */
/* 504 */ 0x19,               /* Corr desc:  field
pointer, FC_ULONG */
                               0x0,                 /*
*/
/* 506 */ NdrFcShort( 0x0 ),  /* 0 */
/* 508 */ NdrFcShort( 0x1 ),  /* Corr flags:  early,
*/
/* 510 */ NdrFcLong( 0xffffffff ),      /* -1 */
/* 514 */ NdrFcShort( 0x0 ),  /* Corr flags:  */
/* 516 */ 0x4c,               /* FC_EMBEDDED_COMPLEX
*/
                               0x0,                 /*
0 */
/* 518 */ NdrFcShort( 0xffffff44 ),     /* Offset= -
188 (330) */
/* 520 */ 0x5c,               /* FC_PAD */
                               0x5b,                /*
FC_END */
/* 522 */
                               0x1a,                /*
FC_BOGUS_STRUCT */
                               0x3,                 /*
3 */
/* 524 */ NdrFcShort( 0x10 ), /* 16 */
/* 526 */ NdrFcShort( 0x0 ),  /* 0 */
/* 528 */ NdrFcShort( 0x6 ),  /* Offset= 6 (534) */
/* 530 */ 0x8,                /* FC_LONG */
                               0x39,                /*
FC_ALIGNM8 */
/* 532 */ 0x36,               /* FC_POINTER */
                               0x5b,                /*
FC_END */
/* 534 */
                               0x11, 0x0,           /*
FC_RP */
/* 536 */ NdrFcShort( 0xffffffdc ),     /* Offset= -
36 (500) */
/* 538 */
                               0x21,                /*
FC_BOGUS_ARRAY */
                               0x3,                 /*
3 */
/* 540 */ NdrFcShort( 0x0 ),  /* 0 */
/* 542 */ 0x19,               /* Corr desc:  field
pointer, FC_ULONG */
                               0x0,                 /*
*/
/* 544 */ NdrFcShort( 0x0 ),  /* 0 */
/* 546 */ NdrFcShort( 0x1 ),  /* Corr flags:  early,
*/
/* 548 */ NdrFcLong( 0xffffffff ),      /* -1 */
/* 552 */ NdrFcShort( 0x0 ),  /* Corr flags:  */
/* 554 */
                               0x12, 0x0,           /*
FC_UP */
/* 556 */ NdrFcShort( 0x176 ),          /* Offset=
374 (930) */
/* 558 */ 0x5c,               /* FC_PAD */
                               0x5b,                /*
FC_END */
/* 560 */
                               0x1a,                /*
FC_BOGUS_STRUCT */
                               0x3,                 /*
3 */
/* 562 */ NdrFcShort( 0x10 ), /* 16 */
/* 564 */ NdrFcShort( 0x0 ),  /* 0 */
/* 566 */ NdrFcShort( 0x6 ),  /* Offset= 6 (572) */
/* 568 */ 0x8,                /* FC_LONG */
                               0x39,                /*
FC_ALIGNM8 */
/* 570 */ 0x36,               /* FC_POINTER */
                               0x5b,                /*
FC_END */
/* 572 */
                               0x11, 0x0,           /*
FC_RP */
/* 574 */ NdrFcShort( 0xffffffdc ),     /* Offset= -
36 (538) */
/* 576 */
                               0x2f,                /*
FC_IP */
                               0x5a,                /*
FC_CONSTANT_IID */
/* 578 */ NdrFcLong( 0x2f ),  /* 47 */
/* 582 */ NdrFcShort( 0x0 ),  /* 0 */
/* 584 */ NdrFcShort( 0x0 ),  /* 0 */
/* 586 */ 0xc0,               /* 192 */
                               0x0,                 /*
0 */
/* 588 */ 0x0,                /* 0 */
                               0x0,                 /*
0 */
/* 590 */ 0x0,                /* 0 */
                               0x0,                 /*
0 */
/* 592 */ 0x0,                /* 0 */
                               0x46,                /*
70 */
/* 594 */
                               0x1b,                /*
FC_CARRAY */
                               0x0,                 /*
0 */
/* 596 */ NdrFcShort( 0x1 ),  /* 1 */
/* 598 */ 0x19,               /* Corr desc:  field
pointer, FC_ULONG */
                               0x0,                 /*
*/
/* 600 */ NdrFcShort( 0x4 ),  /* 4 */
/* 602 */ NdrFcShort( 0x1 ),  /* Corr flags:  early,
*/
/* 604 */ 0x1,                /* FC_BYTE */
                               0x5b,                /*
FC_END */
/* 606 */
                               0x1a,                /*
FC_BOGUS_STRUCT */
```


©2005 Hewlett-Packard Company. All rights reserved.

```
                                0x3,                /*
3 */
/* 608 */ NdrFcShort( 0x18 ), /* 24 */
/* 610 */ NdrFcShort( 0x0 ),  /* 0 */
/* 612 */ NdrFcShort( 0xc ),  /* Offset= 12 (624) */
/* 614 */ 0x8,                /* FC_LONG */
                                0x8,                /*
FC_LONG */
/* 616 */ 0x4c,               /* FC_EMBEDDED_COMPLEX
*/
                                0x0,                /*
0 */
/* 618 */ NdrFcShort( 0xffffffd6 ),     /* Offset= -
42 (576) */
/* 620 */ 0x39,               /* FC_ALIGNM8 */
                                0x36,               /*
FC_POINTER */
/* 622 */ 0x5c,               /* FC_PAD */
                                0x5b,               /*
FC_END */
/* 624 */
                                0x12, 0x0,          /*
FC_UP */
/* 626 */ NdrFcShort( 0xffffffe0 ),     /* Offset= -
32 (594) */
/* 628 */
                                0x21,               /*
FC_BOGUS_ARRAY */
                                0x3,                /*
3 */
/* 630 */ NdrFcShort( 0x0 ),  /* 0 */
/* 632 */ 0x19,               /* Corr desc:  field
pointer, FC_ULONG */
                                0x0,                /*
*/
/* 634 */ NdrFcShort( 0x0 ),  /* 0 */
/* 636 */ NdrFcShort( 0x1 ),  /* Corr flags:  early,
*/
/* 638 */ NdrFcLong( 0xffffffff ),      /* -1 */
/* 642 */ NdrFcShort( 0x0 ),  /* Corr flags:  */
/* 644 */
                                0x12, 0x0,          /*
FC_UP */
/* 646 */ NdrFcShort( 0xffffffd8 ),     /* Offset= -
40 (606) */
/* 648 */ 0x5c,               /* FC_PAD */
                                0x5b,               /*
FC_END */
/* 650 */
                                0x1a,               /*
FC_BOGUS_STRUCT */
                                0x3,                /*
3 */
/* 652 */ NdrFcShort( 0x10 ), /* 16 */
/* 654 */ NdrFcShort( 0x0 ),  /* 0 */
/* 656 */ NdrFcShort( 0x6 ),  /* Offset= 6 (662) */
/* 658 */ 0x8,                /* FC_LONG */
                                0x39,               /*
FC_ALIGNM8 */
/* 660 */ 0x36,               /* FC_POINTER */
                                0x5b,               /*
FC_END */
/* 662 */
                                0x11, 0x0,          /*
FC_RP */
/* 664 */ NdrFcShort( 0xffffffdc ),     /* Offset= -
36 (628) */
/* 666 */
                                0x1d,               /*
FC_SMFARRAY */
                                0x0,                /*
0 */
/* 668 */ NdrFcShort( 0x8 ),  /* 8 */
/* 670 */ 0x1,                /* FC_BYTE */
                                0x5b,               /*
FC_END */
/* 672 */
                                0x15,               /*
FC_STRUCT */
                                0x3,                /*
3 */
/* 674 */ NdrFcShort( 0x10 ), /* 16 */
/* 676 */ 0x8,                /* FC_LONG */
                                0x6,                /*
FC_SHORT */
/* 678 */ 0x6,                /* FC_SHORT */
                                0x4c,               /*
FC_EMBEDDED_COMPLEX */
/* 680 */ 0x0,                /* 0 */
                                NdrFcShort( 0xfffffff1
),        /* Offset= -15 (666) */
                                0x5b,               /*
FC_END */
/* 684 */
                                0x1a,               /*
FC_BOGUS_STRUCT */
                                0x3,                /*
3 */
/* 686 */ NdrFcShort( 0x20 ), /* 32 */
/* 688 */ NdrFcShort( 0x0 ),  /* 0 */
/* 690 */ NdrFcShort( 0xa ),  /* Offset= 10 (700) */
/* 692 */ 0x8,                /* FC_LONG */
                                0x39,               /*
FC_ALIGNM8 */
/* 694 */ 0x36,               /* FC_POINTER */
                                0x4c,               /*
FC_EMBEDDED_COMPLEX */
/* 696 */ 0x0,                /* 0 */
                                NdrFcShort( 0xffffffe7
),        /* Offset= -25 (672) */
                                0x5b,               /*
FC_END */
/* 700 */
                                0x11, 0x0,          /*
FC_RP */
/* 702 */ NdrFcShort( 0xffffff10 ),     /* Offset= -
240 (462) */
/* 704 */
                                0x1b,               /*
FC_CARRAY */
                                0x0,                /*
0 */
/* 706 */ NdrFcShort( 0x1 ),  /* 1 */
/* 708 */ 0x19,               /* Corr desc:  field
pointer, FC_ULONG */
                                0x0,                /*
*/
/* 710 */ NdrFcShort( 0x0 ),  /* 0 */
/* 712 */ NdrFcShort( 0x1 ),  /* Corr flags:  early,
*/
/* 714 */ 0x1,                /* FC_BYTE */
                                0x5b,               /*
FC_END */
/* 716 */
                                0x1a,               /*
FC_BOGUS_STRUCT */
                                0x3,                /*
3 */
/* 718 */ NdrFcShort( 0x10 ), /* 16 */
/* 720 */ NdrFcShort( 0x0 ),  /* 0 */
/* 722 */ NdrFcShort( 0x6 ),  /* Offset= 6 (728) */
/* 724 */ 0x8,                /* FC_LONG */
                                0x39,               /*
FC_ALIGNM8 */
/* 726 */ 0x36,               /* FC_POINTER */
                                0x5b,               /*
FC_END */
/* 728 */
                                0x12, 0x0,          /*
FC_UP */
/* 730 */ NdrFcShort( 0xffffffe6 ),     /* Offset= -
26 (704) */
/* 732 */
                                0x1b,               /*
FC_CARRAY */
                                0x1,                /*
1 */
/* 734 */ NdrFcShort( 0x2 ),  /* 2 */
/* 736 */ 0x19,               /* Corr desc:  field
pointer, FC_ULONG */
                                0x0,                /*
*/
/* 738 */ NdrFcShort( 0x0 ),  /* 0 */
/* 740 */ NdrFcShort( 0x1 ),  /* Corr flags:  early,
*/
/* 742 */ 0x6,                /* FC_SHORT */
                                0x5b,               /*
FC_END */
/* 744 */
                                0x1a,               /*
FC_BOGUS_STRUCT */
                                0x3,                /*
3 */
/* 746 */ NdrFcShort( 0x10 ), /* 16 */
/* 748 */ NdrFcShort( 0x0 ),  /* 0 */
/* 750 */ NdrFcShort( 0x6 ),  /* Offset= 6 (756) */
/* 752 */ 0x8,                /* FC_LONG */
                                0x39,               /*
FC_ALIGNM8 */
/* 754 */ 0x36,               /* FC_POINTER */
                                0x5b,               /*
FC_END */
/* 756 */
                                0x12, 0x0,          /*
FC_UP */
/* 758 */ NdrFcShort( 0xffffffe6 ),     /* Offset= -
26 (732) */
/* 760 */
```


©2005 Hewlett-Packard Company. All rights reserved.

```
                                0x1b,               /*
FC_CARRAY */
                                0x3,                /*
3 */
/* 762 */ NdrFcShort( 0x4 ),  /* 4 */
/* 764 */ 0x19,               /* Corr desc:  field
pointer, FC_ULONG */
                                0x0,                /*
*/
/* 766 */ NdrFcShort( 0x0 ),  /* 0 */
/* 768 */ NdrFcShort( 0x1 ),  /* Corr flags:  early,
*/
/* 770 */ 0x8,                /* FC_LONG */
                                0x5b,               /*
FC_END */
/* 772 */
                                0x1a,               /*
FC_BOGUS_STRUCT */
                                0x3,                /*
3 */
/* 774 */ NdrFcShort( 0x10 ), /* 16 */
/* 776 */ NdrFcShort( 0x0 ),  /* 0 */
/* 778 */ NdrFcShort( 0x6 ),  /* Offset= 6 (784) */
/* 780 */ 0x8,                /* FC_LONG */
                                0x39,               /*
FC_ALIGNM8 */
/* 782 */ 0x36,               /* FC_POINTER */
                                0x5b,               /*
FC_END */
/* 784 */
                                0x12, 0x0,          /*
FC_UP */
/* 786 */ NdrFcShort( 0xffffffe6 ),     /* Offset= -
26 (760) */
/* 788 */
                                0x1b,               /*
FC_CARRAY */
                                0x7,                /*
7 */
/* 790 */ NdrFcShort( 0x8 ),  /* 8 */
/* 792 */ 0x19,               /* Corr desc:  field
pointer, FC_ULONG */
                                0x0,                /*
*/
/* 794 */ NdrFcShort( 0x0 ),  /* 0 */
/* 796 */ NdrFcShort( 0x1 ),  /* Corr flags:  early,
*/
/* 798 */ 0xb,                /* FC_HYPER */
                                0x5b,               /*
FC_END */
/* 800 */
                                0x1a,               /*
FC_BOGUS_STRUCT */
                                0x3,                /*
3 */
/* 802 */ NdrFcShort( 0x10 ), /* 16 */
/* 804 */ NdrFcShort( 0x0 ),  /* 0 */
/* 806 */ NdrFcShort( 0x6 ),  /* Offset= 6 (812) */
/* 808 */ 0x8,                /* FC_LONG */
                                0x39,               /*
FC_ALIGNM8 */
/* 810 */ 0x36,               /* FC_POINTER */
                                0x5b,               /*
FC_END */
/* 812 */
                                0x12, 0x0,          /*
FC_UP */
/* 814 */ NdrFcShort( 0xffffffe6 ),     /* Offset= -
26 (788) */
/* 816 */
                                0x15,               /*
FC_STRUCT */
                                0x3,                /*
3 */
/* 818 */ NdrFcShort( 0x8 ),  /* 8 */
/* 820 */ 0x8,                /* FC_LONG */
                                0x8,                /*
FC_LONG */
/* 822 */ 0x5c,               /* FC_PAD */
                                0x5b,               /*
FC_END */
/* 824 */
                                0x1b,               /*
FC_CARRAY */
                                0x3,                /*
3 */
/* 826 */ NdrFcShort( 0x8 ),  /* 8 */
/* 828 */ 0x7,                /* Corr desc: FC_USHORT
*/
                                0x0,                /*
*/
/* 830 */ NdrFcShort( 0xffc8 ),         /* -56 */
/* 832 */ NdrFcShort( 0x1 ),  /* Corr flags:  early,
*/
/* 834 */ 0x4c,               /* FC_EMBEDDED_COMPLEX
*/
                                0x0,                /*
0 */
/* 836 */ NdrFcShort( 0xffffffec ),     /* Offset= -
20 (816) */
/* 838 */ 0x5c,               /* FC_PAD */
                                0x5b,               /*
FC_END */
/* 840 */
                                0x1a,               /*
FC_BOGUS_STRUCT */
                                0x3,                /*
3 */
/* 842 */ NdrFcShort( 0x38 ), /* 56 */
/* 844 */ NdrFcShort( 0xffffffec ),     /* Offset= -
20 (824) */
/* 846 */ NdrFcShort( 0x0 ),  /* Offset= 0 (846) */
/* 848 */ 0x6,                /* FC_SHORT */
                                0x6,                /*
FC_SHORT */
/* 850 */ 0x38,               /* FC_ALIGNM4 */
                                0x8,                /*
FC_LONG */
/* 852 */ 0x8,                /* FC_LONG */
                                0x4c,               /*
FC_EMBEDDED_COMPLEX */
/* 854 */ 0x4,                /* 4 */
                                NdrFcShort( 0xfffffe0d
),        /* Offset= -499 (356) */
                                0x5b,               /*
FC_END */
/* 858 */
                                0x12, 0x0,          /*
FC_UP */
/* 860 */ NdrFcShort( 0xffffff02 ),     /* Offset= -
254 (606) */
/* 862 */
                                0x12, 0x8,          /*
FC_UP [simple_pointer] */
/* 864 */ 0x1,                /* FC_BYTE */
                                0x5c,               /*
FC_PAD */
/* 866 */
                                0x12, 0x8,          /*
FC_UP [simple_pointer] */
/* 868 */ 0x6,                /* FC_SHORT */
                                0x5c,               /*
FC_PAD */
/* 870 */
                                0x12, 0x8,          /*
FC_UP [simple_pointer] */
/* 872 */ 0x8,                /* FC_LONG */
                                0x5c,               /*
FC_PAD */
/* 874 */
                                0x12, 0x8,          /*
FC_UP [simple_pointer] */
/* 876 */ 0xa,                /* FC_FLOAT */
                                0x5c,               /*
FC_PAD */
/* 878 */
                                0x12, 0x8,          /*
FC_UP [simple_pointer] */
/* 880 */ 0xc,                /* FC_DOUBLE */
                                0x5c,               /*
FC_PAD */
/* 882 */
                                0x12, 0x0,          /*
FC_UP */
/* 884 */ NdrFcShort( 0xfffffda4 ),     /* Offset= -
604 (280) */
/* 886 */
                                0x12, 0x10,         /*
FC_UP [pointer_deref] */
/* 888 */ NdrFcShort( 0xfffffda6 ),     /* Offset= -
602 (286) */
/* 890 */
                                0x12, 0x10,         /*
FC_UP [pointer_deref] */
/* 892 */ NdrFcShort( 0xfffffdbc ),     /* Offset= -
580 (312) */
/* 894 */
                                0x12, 0x10,         /*
FC_UP [pointer_deref] */
/* 896 */ NdrFcShort( 0xfffffdca ),     /* Offset= -
566 (330) */
/* 898 */
                                0x12, 0x10,         /*
FC_UP [pointer_deref] */
/* 900 */ NdrFcShort( 0xfffffdd8 ),     /* Offset= -
552 (348) */
/* 902 */
```


©2005 Hewlett-Packard Company. All rights reserved.

```
                                0x12, 0x10,         /*
FC_UP [pointer_deref] */
/* 904 */ NdrFcShort( 0x2 ),  /* Offset= 2 (906) */
/* 906 */
                                0x12, 0x0,          /*
FC_UP */
/* 908 */ NdrFcShort( 0x16 ), /* Offset= 22 (930) */
/* 910 */
                                0x15,               /*
FC_STRUCT */
                                0x7,                /*
7 */
/* 912 */ NdrFcShort( 0x10 ), /* 16 */
/* 914 */ 0x6,                /* FC_SHORT */
                                0x1,                /*
FC_BYTE */
/* 916 */ 0x1,                /* FC_BYTE */
                                0x38,               /*
FC_ALIGNM4 */
/* 918 */ 0x8,                /* FC_LONG */
                                0x39,               /*
FC_ALIGNM8 */
/* 920 */ 0xb,                /* FC_HYPER */
                                0x5b,               /*
FC_END */
/* 922 */
                                0x12, 0x0,          /*
FC_UP */
/* 924 */ NdrFcShort( 0xfffffff2 ),     /* Offset= -
14 (910) */
/* 926 */
                                0x12, 0x8,          /*
FC_UP [simple_pointer] */
/* 928 */ 0x2,                /* FC_CHAR */
                                0x5c,               /*
FC_PAD */
/* 930 */
                                0x1a,               /*
FC_BOGUS_STRUCT */
                                0x7,                /*
7 */
/* 932 */ NdrFcShort( 0x20 ), /* 32 */
/* 934 */ NdrFcShort( 0x0 ),  /* 0 */
/* 936 */ NdrFcShort( 0x0 ),  /* Offset= 0 (936) */
/* 938 */ 0x8,                /* FC_LONG */
                                0x8,                /*
FC_LONG */
/* 940 */ 0x6,                /* FC_SHORT */
                                0x6,                /*
FC_SHORT */
/* 942 */ 0x6,                /* FC_SHORT */
                                0x6,                /*
FC_SHORT */
/* 944 */ 0x4c,               /* FC_EMBEDDED_COMPLEX
*/
                                0x0,                /*
0 */
/* 946 */ NdrFcShort( 0xfffffc54 ),     /* Offset= -
940 (6) */
/* 948 */ 0x5c,               /* FC_PAD */
                                0x5b,               /*
FC_END */
/* 950 */ 0xb4,               /* FC_USER_MARSHAL */
                                0x83,               /*
131 */
/* 952 */ NdrFcShort( 0x0 ),  /* 0 */
/* 954 */ NdrFcShort( 0x18 ), /* 24 */
/* 956 */ NdrFcShort( 0x0 ),  /* 0 */
/* 958 */ NdrFcShort( 0xfffffc44 ),     /* Offset= -
956 (2) */
/* 960 */
                                0x11, 0x4,          /*
FC_RP [alloced_on_stack] */
/* 962 */ NdrFcShort( 0x6 ),  /* Offset= 6 (968) */
/* 964 */
                                0x13, 0x0,          /*
FC_OP */
/* 966 */ NdrFcShort( 0xfffffffdc ),     /* Offset= -
36 (930) */
/* 968 */ 0xb4,               /* FC_USER_MARSHAL */
                                0x83,               /*
131 */
/* 970 */ NdrFcShort( 0x0 ),  /* 0 */
/* 972 */ NdrFcShort( 0x18 ), /* 24 */
/* 974 */ NdrFcShort( 0x0 ),  /* 0 */
/* 976 */ NdrFcShort( 0xfffffff4 ),     /* Offset= -
12 (964) */

                                0x0
        }
    };

const CInterfaceProxyVtbl *
_tpcc_com_ps_ProxyVtblList[] =
{
    ( CInterfaceProxyVtbl *) &_ITPCCProxyVtbl,
    0
};

const CInterfaceStubVtbl *
_tpcc_com_ps_StubVtblList[] =
{
    ( CInterfaceStubVtbl *) &_ITPCCStubVtbl,
    0
};

PCInterfaceName const
_tpcc_com_ps_InterfaceNamesList[] =
{
    "ITPCC",
    0
};


#define _tpcc_com_ps_CHECK_IID(n)
            IID_GENERIC_CHECK_IID( _tpcc_com_ps, pIID,
n)

int __stdcall _tpcc_com_ps_IID_Lookup( const IID *
pIID, int * pIndex )
{

    if(!_tpcc_com_ps_CHECK_IID(0))
        {
        *pIndex = 0;
        return 1;
        }

    return 0;
}

const ExtendedProxyFileInfo tpcc_com_ps_ProxyFileInfo
=
{
    (PCInterfaceProxyVtblList *) &
_tpcc_com_ps_ProxyVtblList,
    (PCInterfaceStubVtblList *) &
_tpcc_com_ps_StubVtblList,
    (const PCInterfaceName * ) &
_tpcc_com_ps_InterfaceNamesList,
    0, // no delegation
    & _tpcc_com_ps_IID_Lookup,
    1,
    2,
    0, /* table of [async_uuid] interfaces */
    0, /* Filler1 */
    0, /* Filler2 */
    0  /* Filler3 */
};


#endif /* defined(_M_IA64) || defined(_M_AXP64)*/
```

tpcc_com_ps_p.c

```
#pragma warning( disable: 4049 )  /* more than 64k
source lines */

/* this ALWAYS GENERATED file contains the proxy stub
code */


 /* File created by MIDL compiler version 5.03.0280
*/
/* at Thu Dec 13 23:13:08 2001
 */
/* Compiler settings for .\src\tpcc_com_ps.idl:
    Oicf (OptLev=i2), W1, Zp8, env=Win32 (32b run),
ms_ext, c_ext
    error checks: allocation ref bounds_check enum
stub_data
    VC __declspec() decoration level:
         __declspec(uuid()), __declspec(selectany),
__declspec(novtable)
         DECLSPEC_UUID(), MIDL_INTERFACE()
*/
//@@MIDL_FILE_HEADING(  )

#if !defined(_M_IA64) && !defined(_M_AXP64)
#define USE_STUBLESS_PROXY


/* verify that the <rpcproxy.h> version is high
enough to compile this file*/
```


©2005 Hewlett-Packard Company. All rights reserved.

```
#ifndef __REDQ_RPCPROXY_H_VERSION__
#define __REQUIRED_RPCPROXY_H_VERSION__ 440
#endif


#include "rpcproxy.h"
#ifndef __RPCPROXY_H_VERSION__
#error this stub requires an updated version of
<rpcproxy.h>
#endif // __RPCPROXY_H_VERSION__


#include "tpcc_com_ps.h"

#define TYPE_FORMAT_STRING_SIZE   997
#define PROC_FORMAT_STRING_SIZE   193
#define TRANSMIT_AS_TABLE_SIZE    0
#define WIRE_MARSHAL_TABLE_SIZE   1

typedef struct _MIDL_TYPE_FORMAT_STRING
    {
    short          Pad;
    unsigned char  Format[ TYPE_FORMAT_STRING_SIZE ];
    } MIDL_TYPE_FORMAT_STRING;

typedef struct _MIDL_PROC_FORMAT_STRING
    {
    short          Pad;
    unsigned char  Format[ PROC_FORMAT_STRING_SIZE ];
    } MIDL_PROC_FORMAT_STRING;


extern const MIDL_TYPE_FORMAT_STRING
__MIDL_TypeFormatString;
extern const MIDL_PROC_FORMAT_STRING
__MIDL_ProcFormatString;


/* Standard interface: __MIDL_itf_tpcc_com_ps_0000,
ver. 0.0,

GUID={0x00000000,0x0000,0x0000,{0x00,0x00,0x00,0x00,0
x00,0x00,0x00,0x00}} */


/* Object interface: IUnknown, ver. 0.0,

GUID={0x00000000,0x0000,0x0000,{0xC0,0x00,0x00,0x00,0
x00,0x00,0x00,0x46}} */


/* Object interface: ITPCC, ver. 0.0,

GUID={0xFEEE6AA2,0x84B1,0x11d2,{0xBA,0x47,0x00,0xC0,0
x4F,0xBF,0xE0,0x8B}} */


extern const MIDL_STUB_DESC Object_StubDesc;


extern const MIDL_SERVER_INFO ITPCC_ServerInfo;

#pragma code_seg(".orpc")

static const unsigned short
ITPCC_FormatStringOffsetTable[] =
    {
    0,
    34,
    68,
    102,
    136,
    170
    };

static const MIDL_SERVER_INFO ITPCC_ServerInfo =
    {
    &Object_StubDesc,
    0,
    __MIDL_ProcFormatString.Format,
    &ITPCC_FormatStringOffsetTable[-3],
    0,
    0,
    0,
    0
    };

static const MIDL_STUBLESS_PROXY_INFO ITPCC_ProxyInfo
=
    {
    &Object_StubDesc,
    __MIDL_ProcFormatString.Format,
    &ITPCC_FormatStringOffsetTable[-3],
    0,
    0,
    0
    };

CINTERFACE_PROXY_VTABLE(9) _ITPCCProxyVtbl =
{
    &ITPCC_ProxyInfo,
    &IID_ITPCC,
    IUnknown_QueryInterface_Proxy,
    IUnknown_AddRef_Proxy,
    IUnknown_Release_Proxy ,
    (void *)-1 /* ITPCC::NewOrder */ ,
    (void *)-1 /* ITPCC::Payment */ ,
    (void *)-1 /* ITPCC::Delivery */ ,
    (void *)-1 /* ITPCC::StockLevel */ ,
    (void *)-1 /* ITPCC::OrderStatus */ ,
    (void *)-1 /* ITPCC::CallSetComplete */
};

const CInterfaceStubVtbl _ITPCCStubVtbl =
{
    &IID_ITPCC,
    &ITPCC_ServerInfo,
    9,
    0, /* pure interpreted */
    CStdStubBuffer_METHODS
};

extern const USER_MARSHAL_ROUTINE_QUADRUPLE
UserMarshalRoutines[ WIRE_MARSHAL_TABLE_SIZE ];

static const MIDL_STUB_DESC Object_StubDesc =
    {
    0,
    NdrOleAllocate,
    NdrOleFree,
    0,
    0,
    0,
    0,
    0,
    __MIDL_TypeFormatString.Format,
    1, /* -error bounds_check flag */
    0x20000, /* Ndr library version */
    0,
    0x5030118, /* MIDL Version 5.3.280 */
    0,
    UserMarshalRoutines,
    0,  /* notify & notify_flag routine table */
    0x1, /* MIDL flag */
    0,  /* Reserved3 */
    0,  /* Reserved4 */
    0   /* Reserved5 */
    };

#pragma data_seg(".rdata")

static const USER_MARSHAL_ROUTINE_QUADRUPLE
UserMarshalRoutines[ WIRE_MARSHAL_TABLE_SIZE ] =
        {

            {
            VARIANT_UserSize
            ,VARIANT_UserMarshal
            ,VARIANT_UserUnmarshal
            ,VARIANT_UserFree
            }

        };


#if !defined(__RPC_WIN32__)
#error  Invalid build platform for this stub.
#endif

#if !(TARGET_IS_NT40_OR_LATER)
#error You need a Windows NT 4.0 or later to run this
stub because it uses these features:
#error   -Oif or -Oicf, [wire_marshal] or
[user_marshal] attribute.
#error However, your C/C++ compilation flags indicate
you intend to run this app on earlier systems.
#error This app will die there with the
RPC_X_WRONG_STUB_VERSION error.
#endif


static const MIDL_PROC_FORMAT_STRING
__MIDL_ProcFormatString =
    {
        0,
        {

          /* Procedure NewOrder */
```


©2005 Hewlett-Packard Company. All rights reserved.

```
                                0x33,               /*
FC_AUTO_HANDLE */
                                0x6c,               /*
Old Flags:  object, Oi2 */
/*  2 */  NdrFcLong( 0x0 ),   /* 0 */
/*  6 */  NdrFcShort( 0x3 ),  /* 3 */
#ifndef _ALPHA_
#ifndef _PPC_
#if !defined(_MIPS_)
/*  8 */  NdrFcShort( 0x1c ), /* x86 Stack
size/offset = 28 */
#else
                                NdrFcShort( 0x20 ), /*
MIPS Stack size/offset = 32 */
#endif
#else
                                NdrFcShort( 0x20 ), /*
PPC Stack size/offset = 32 */
#endif
#else
                                NdrFcShort( 0x28 ), /*
Alpha Stack size/offset = 40 */
#endif
/* 10 */  NdrFcShort( 0x0 ),  /* 0 */
/* 12 */  NdrFcShort( 0x8 ),  /* 8 */
/* 14 */  0x7,                /* Oi2 Flags:  srv must
size, clt must size, has return, */
                                0x3,                /*
3 */

          /* Parameter txn_in */

/* 16 */  NdrFcShort( 0x8b ), /* Flags:  must size,
must free, in, by val, */
#ifndef _ALPHA_
#ifndef _PPC_
#if !defined(_MIPS_)
/* 18 */  NdrFcShort( 0x4 ),  /* x86 Stack
size/offset = 4 */
#else
                                NdrFcShort( 0x8 ),  /*
MIPS Stack size/offset = 8 */
#endif
#else
                                NdrFcShort( 0x8 ),  /*
PPC Stack size/offset = 8 */
#endif
#else
                                NdrFcShort( 0x8 ),  /*
Alpha Stack size/offset = 8 */
#endif
/* 20 */  NdrFcShort( 0x3c8 ),          /* Type
Offset=968 */

          /* Parameter txn_out */

/* 22 */  NdrFcShort( 0x4113 ),         /* Flags:
must size, must free, out, simple ref, srv alloc
size=16 */
#ifndef _ALPHA_
#ifndef _PPC_
#if !defined(_MIPS_)
/* 24 */  NdrFcShort( 0x14 ), /* x86 Stack
size/offset = 20 */
#else
                                NdrFcShort( 0x18 ), /*
MIPS Stack size/offset = 24 */
#endif
#else
                                NdrFcShort( 0x18 ), /*
PPC Stack size/offset = 24 */
#endif
#else
                                NdrFcShort( 0x18 ), /*
Alpha Stack size/offset = 24 */
#endif
/* 26 */  NdrFcShort( 0x3da ),          /* Type
Offset=986 */

          /* Return value */

/* 28 */  NdrFcShort( 0x70 ), /* Flags:  out, return,
base type, */
#ifndef _ALPHA_
#ifndef _PPC_
#if !defined(_MIPS_)
/* 30 */  NdrFcShort( 0x18 ), /* x86 Stack
size/offset = 24 */
#else
                                NdrFcShort( 0x1c ), /*
MIPS Stack size/offset = 28 */
#endif
#else
                                NdrFcShort( 0x1c ), /*
PPC Stack size/offset = 28 */
#endif
#else
                                NdrFcShort( 0x20 ), /*
Alpha Stack size/offset = 32 */
#endif
/* 32 */  0x8,                /* FC_LONG */
                                0x0,                /*
0 */

          /* Procedure Payment */

/* 34 */  0x33,               /* FC_AUTO_HANDLE */
                                0x6c,               /*
Old Flags:  object, Oi2 */
/* 36 */  NdrFcLong( 0x0 ),   /* 0 */
/* 40 */  NdrFcShort( 0x4 ),  /* 4 */
#ifndef _ALPHA_
#ifndef _PPC_
#if !defined(_MIPS_)
/* 42 */  NdrFcShort( 0x1c ), /* x86 Stack
size/offset = 28 */
#else
                                NdrFcShort( 0x20 ), /*
MIPS Stack size/offset = 32 */
#endif
#else
                                NdrFcShort( 0x20 ), /*
PPC Stack size/offset = 32 */
#endif
#else
                                NdrFcShort( 0x28 ), /*
Alpha Stack size/offset = 40 */
#endif
/* 44 */  NdrFcShort( 0x0 ),  /* 0 */
/* 46 */  NdrFcShort( 0x8 ),  /* 8 */
/* 48 */  0x7,                /* Oi2 Flags:  srv must
size, clt must size, has return, */
                                0x3,                /*
3 */

          /* Parameter txn_in */

/* 50 */  NdrFcShort( 0x8b ), /* Flags:  must size,
must free, in, by val, */
#ifndef _ALPHA_
#ifndef _PPC_
#if !defined(_MIPS_)
/* 52 */  NdrFcShort( 0x4 ),  /* x86 Stack
size/offset = 4 */
#else
                                NdrFcShort( 0x8 ),  /*
MIPS Stack size/offset = 8 */
#endif
#else
                                NdrFcShort( 0x8 ),  /*
PPC Stack size/offset = 8 */
#endif
#else
                                NdrFcShort( 0x8 ),  /*
Alpha Stack size/offset = 8 */
#endif
/* 54 */  NdrFcShort( 0x3c8 ),          /* Type
Offset=968 */

          /* Parameter txn_out */

/* 56 */  NdrFcShort( 0x4113 ),         /* Flags:
must size, must free, out, simple ref, srv alloc
size=16 */
#ifndef _ALPHA_
#ifndef _PPC_
#if !defined(_MIPS_)
/* 58 */  NdrFcShort( 0x14 ), /* x86 Stack
size/offset = 20 */
#else
                                NdrFcShort( 0x18 ), /*
MIPS Stack size/offset = 24 */
#endif
#else
                                NdrFcShort( 0x18 ), /*
PPC Stack size/offset = 24 */
#endif
#else
                                NdrFcShort( 0x18 ), /*
Alpha Stack size/offset = 24 */
#endif
/* 60 */  NdrFcShort( 0x3da ),          /* Type
Offset=986 */

          /* Return value */

/* 62 */  NdrFcShort( 0x70 ), /* Flags:  out, return,
base type, */
```


©2005 Hewlett-Packard Company. All rights reserved.

```
#ifndef _ALPHA_
#ifndef _PPC_
#if !defined(_MIPS_)
/* 64 */  NdrFcShort( 0x18 ), /* x86 Stack
size/offset = 24 */
#else
                            NdrFcShort( 0x1c ), /*
MIPS Stack size/offset = 28 */
#endif
#else
                            NdrFcShort( 0x1c ), /*
PPC Stack size/offset = 28 */
#endif
#else
                            NdrFcShort( 0x20 ), /*
Alpha Stack size/offset = 32 */
#endif
/* 66 */  0x8,              /* FC_LONG */
                            0x0,              /*
0 */

          /* Procedure Delivery */

/* 68 */  0x33,             /* FC_AUTO_HANDLE */
                            0x6c,             /*
Old Flags:  object, Oi2 */
/* 70 */  NdrFcLong( 0x0 ),   /* 0 */
/* 74 */  NdrFcShort( 0x5 ),  /* 5 */
#ifndef _ALPHA_
#ifndef _PPC_
#if !defined(_MIPS_)
/* 76 */  NdrFcShort( 0x1c ), /* x86 Stack
size/offset = 28 */
#else
                            NdrFcShort( 0x20 ), /*
MIPS Stack size/offset = 32 */
#endif
#else
                            NdrFcShort( 0x20 ), /*
PPC Stack size/offset = 32 */
#endif
#else
                            NdrFcShort( 0x28 ), /*
Alpha Stack size/offset = 40 */
#endif
/* 78 */  NdrFcShort( 0x0 ),  /* 0 */
/* 80 */  NdrFcShort( 0x8 ),  /* 8 */
/* 82 */  0x7,              /* Oi2 Flags:  srv must
size, clt must size, has return, */
                            0x3,              /*
3 */

          /* Parameter txn_in */

/* 84 */  NdrFcShort( 0x8b ), /* Flags:  must size,
must free, in, by val, */
#ifndef _ALPHA_
#ifndef _PPC_
#if !defined(_MIPS_)
/* 86 */  NdrFcShort( 0x4 ),  /* x86 Stack
size/offset = 4 */
#else
                            NdrFcShort( 0x8 ),  /*
MIPS Stack size/offset = 8 */
#endif
#else
                            NdrFcShort( 0x8 ),  /*
PPC Stack size/offset = 8 */
#endif
#else
                            NdrFcShort( 0x8 ),  /*
Alpha Stack size/offset = 8 */
#endif
/* 88 */  NdrFcShort( 0x3c8 ),          /* Type
Offset=968 */

          /* Parameter txn_out */

/* 90 */  NdrFcShort( 0x4113 ),         /* Flags:
must size, must free, out, simple ref, srv alloc
size=16 */
#ifndef _ALPHA_
#ifndef _PPC_
#if !defined(_MIPS_)
/* 92 */  NdrFcShort( 0x14 ), /* x86 Stack
size/offset = 20 */
#else
                            NdrFcShort( 0x18 ), /*
MIPS Stack size/offset = 24 */
#endif
#else
                            NdrFcShort( 0x18 ), /*
PPC Stack size/offset = 24 */
#endif
#else
                            NdrFcShort( 0x18 ), /*
Alpha Stack size/offset = 24 */
#endif
/* 94 */  NdrFcShort( 0x3da ),          /* Type
Offset=986 */

          /* Return value */

/* 96 */  NdrFcShort( 0x70 ), /* Flags:  out, return,
base type, */
#ifndef _ALPHA_
#ifndef _PPC_
#if !defined(_MIPS_)
/* 98 */  NdrFcShort( 0x18 ), /* x86 Stack
size/offset = 24 */
#else
                            NdrFcShort( 0x1c ), /*
MIPS Stack size/offset = 28 */
#endif
#else
                            NdrFcShort( 0x1c ), /*
PPC Stack size/offset = 28 */
#endif
#else
                            NdrFcShort( 0x20 ), /*
Alpha Stack size/offset = 32 */
#endif
/* 100 */ 0x8,               /* FC_LONG */
                            0x0,              /*
0 */

          /* Procedure StockLevel */

/* 102 */ 0x33,              /* FC_AUTO_HANDLE */
                            0x6c,             /*
Old Flags:  object, Oi2 */
/* 104 */ NdrFcLong( 0x0 ),   /* 0 */
/* 108 */ NdrFcShort( 0x6 ),  /* 6 */
#ifndef _ALPHA_
#ifndef _PPC_
#if !defined(_MIPS_)
/* 110 */ NdrFcShort( 0x1c ), /* x86 Stack
size/offset = 28 */
#else
                            NdrFcShort( 0x20 ), /*
MIPS Stack size/offset = 32 */
#endif
#else
                            NdrFcShort( 0x20 ), /*
PPC Stack size/offset = 32 */
#endif
#else
                            NdrFcShort( 0x28 ), /*
Alpha Stack size/offset = 40 */
#endif
/* 112 */ NdrFcShort( 0x0 ),  /* 0 */
/* 114 */ NdrFcShort( 0x8 ),  /* 8 */
/* 116 */ 0x7,               /* Oi2 Flags:  srv must
size, clt must size, has return, */
                            0x3,              /*
3 */

          /* Parameter txn_in */

/* 118 */ NdrFcShort( 0x8b ), /* Flags:  must size,
must free, in, by val, */
#ifndef _ALPHA_
#ifndef _PPC_
#if !defined(_MIPS_)
/* 120 */ NdrFcShort( 0x4 ),  /* x86 Stack
size/offset = 4 */
#else
                            NdrFcShort( 0x8 ),  /*
MIPS Stack size/offset = 8 */
#endif
#else
                            NdrFcShort( 0x8 ),  /*
PPC Stack size/offset = 8 */
#endif
#else
                            NdrFcShort( 0x8 ),  /*
Alpha Stack size/offset = 8 */
#endif
/* 122 */ NdrFcShort( 0x3c8 ),          /* Type
Offset=968 */

          /* Parameter txn_out */

/* 124 */ NdrFcShort( 0x4113 ),         /* Flags:
must size, must free, out, simple ref, srv alloc
size=16 */
#ifndef _ALPHA_
#ifndef _PPC_
```


©2005 Hewlett-Packard Company. All rights reserved.

```
#if !defined(_MIPS_)
/* 126 */ NdrFcShort( 0x14 ), /* x86 Stack
size/offset = 20 */
#else
                                NdrFcShort( 0x18 ), /*
MIPS Stack size/offset = 24 */
#endif
#else
                                NdrFcShort( 0x18 ), /*
PPC Stack size/offset = 24 */
#endif
#else
                                NdrFcShort( 0x18 ), /*
Alpha Stack size/offset = 24 */
#endif
/* 128 */ NdrFcShort( 0x3da ),          /* Type
Offset=986 */

          /* Return value */

/* 130 */ NdrFcShort( 0x70 ), /* Flags:  out, return,
base type, */
#ifndef _ALPHA_
#ifndef _PPC_
#if !defined(_MIPS_)
/* 132 */ NdrFcShort( 0x18 ), /* x86 Stack
size/offset = 24 */
#else
                                NdrFcShort( 0x1c ), /*
MIPS Stack size/offset = 28 */
#endif
#else
                                NdrFcShort( 0x1c ), /*
PPC Stack size/offset = 28 */
#endif
#else
                                NdrFcShort( 0x20 ), /*
Alpha Stack size/offset = 32 */
#endif
/* 134 */ 0x8,                  /* FC_LONG */
                                0x0,                /*
0 */

          /* Procedure OrderStatus */

/* 136 */ 0x33,                 /* FC_AUTO_HANDLE */
                                0x6c,               /*
Old Flags:  object, Oi2 */
/* 138 */ NdrFcLong( 0x0 ),   /* 0 */
/* 142 */ NdrFcShort( 0x7 ),  /* 7 */
#ifndef _ALPHA_
#ifndef _PPC_
#if !defined(_MIPS_)
/* 144 */ NdrFcShort( 0x1c ), /* x86 Stack
size/offset = 28 */
#else
                                NdrFcShort( 0x20 ), /*
MIPS Stack size/offset = 32 */
#endif
#else
                                NdrFcShort( 0x20 ), /*
PPC Stack size/offset = 32 */
#endif
#else
                                NdrFcShort( 0x28 ), /*
Alpha Stack size/offset = 40 */
#endif
/* 146 */ NdrFcShort( 0x0 ),  /* 0 */
/* 148 */ NdrFcShort( 0x8 ),  /* 8 */
/* 150 */ 0x7,                /* Oi2 Flags:  srv must
size, clt must size, has return, */
                                0x3,                /*
3 */

          /* Parameter txn_in */

/* 152 */ NdrFcShort( 0x8b ), /* Flags:  must size,
must free, in, by val, */
#ifndef _ALPHA_
#ifndef _PPC_
#if !defined(_MIPS_)
/* 154 */ NdrFcShort( 0x4 ),  /* x86 Stack
size/offset = 4 */
#else
                                NdrFcShort( 0x8 ),  /*
MIPS Stack size/offset = 8 */
#endif
#else
                                NdrFcShort( 0x8 ),  /*
PPC Stack size/offset = 8 */
#endif
#else
                                NdrFcShort( 0x8 ),  /*
Alpha Stack size/offset = 8 */
#endif
/* 156 */ NdrFcShort( 0x3c8 ),          /* Type
Offset=968 */

          /* Parameter txn_out */

/* 158 */ NdrFcShort( 0x4113 ),         /* Flags:
must size, must free, out, simple ref, srv alloc
size=16 */
#ifndef _ALPHA_
#ifndef _PPC_
#if !defined(_MIPS_)
/* 160 */ NdrFcShort( 0x14 ), /* x86 Stack
size/offset = 20 */
#else
                                NdrFcShort( 0x18 ), /*
MIPS Stack size/offset = 24 */
#endif
#else
                                NdrFcShort( 0x18 ), /*
PPC Stack size/offset = 24 */
#endif
#else
                                NdrFcShort( 0x18 ), /*
Alpha Stack size/offset = 24 */
#endif
/* 162 */ NdrFcShort( 0x3da ),          /* Type
Offset=986 */

          /* Return value */

/* 164 */ NdrFcShort( 0x70 ), /* Flags:  out, return,
base type, */
#ifndef _ALPHA_
#ifndef _PPC_
#if !defined(_MIPS_)
/* 166 */ NdrFcShort( 0x18 ), /* x86 Stack
size/offset = 24 */
#else
                                NdrFcShort( 0x1c ), /*
MIPS Stack size/offset = 28 */
#endif
#else
                                NdrFcShort( 0x1c ), /*
PPC Stack size/offset = 28 */
#endif
#else
                                NdrFcShort( 0x20 ), /*
Alpha Stack size/offset = 32 */
#endif
/* 168 */ 0x8,                  /* FC_LONG */
                                0x0,                /*
0 */

          /* Procedure CallSetComplete */

/* 170 */ 0x33,                 /* FC_AUTO_HANDLE */
                                0x6c,               /*
Old Flags:  object, Oi2 */
/* 172 */ NdrFcLong( 0x0 ),   /* 0 */
/* 176 */ NdrFcShort( 0x8 ),  /* 8 */
#ifndef _ALPHA_
/* 178 */ NdrFcShort( 0x8 ),  /* x86, MIPS, PPC Stack
size/offset = 8 */
#else
                                NdrFcShort( 0x10 ), /*
Alpha Stack size/offset = 16 */
#endif
/* 180 */ NdrFcShort( 0x0 ),  /* 0 */
/* 182 */ NdrFcShort( 0x8 ),  /* 8 */
/* 184 */ 0x4,                  /* Oi2 Flags:  has
return, */
                                0x1,                /*
1 */

          /* Return value */

/* 186 */ NdrFcShort( 0x70 ), /* Flags:  out, return,
base type, */
#ifndef _ALPHA_
/* 188 */ NdrFcShort( 0x4 ),  /* x86, MIPS, PPC Stack
size/offset = 4 */
#else
                                NdrFcShort( 0x8 ),  /*
Alpha Stack size/offset = 8 */
#endif
/* 190 */ 0x8,                  /* FC_LONG */
                                0x0,                /*
0 */

                                0x0
        }
    };
```


©2005 Hewlett-Packard Company. All rights reserved.

```
static const MIDL_TYPE_FORMAT_STRING
__MIDL_TypeFormatString =
    {
        0,
        {
                                NdrFcShort( 0x0 ),  /*
0 */
/*  2 */
                                0x12, 0x0,          /*
FC_UP */
/*  4 */  NdrFcShort( 0x3b0 ),          /* Offset=
944 (948) */
/*  6 */
                                0x2b,               /*
FC_NON_ENCAPSULATED_UNION */
                                0x9,                /*
FC_ULONG */
/*  8 */  0x7,                /* Corr desc: FC_USHORT
*/
                                0x0,                /*
*/
/* 10 */  NdrFcShort( 0xfff8 ),         /* -8 */
/* 12 */  NdrFcShort( 0x2 ),  /* Offset= 2 (14) */
/* 14 */  NdrFcShort( 0x10 ), /* 16 */
/* 16 */  NdrFcShort( 0x2b ), /* 43 */
/* 18 */  NdrFcLong( 0x3 ),   /* 3 */
/* 22 */  NdrFcShort( 0x8008 ),         /* Simple arm
type: FC_LONG */
/* 24 */  NdrFcLong( 0x11 ),  /* 17 */
/* 28 */  NdrFcShort( 0x8001 ),         /* Simple arm
type: FC_BYTE */
/* 30 */  NdrFcLong( 0x2 ),   /* 2 */
/* 34 */  NdrFcShort( 0x8006 ),         /* Simple arm
type: FC_SHORT */
/* 36 */  NdrFcLong( 0x4 ),   /* 4 */
/* 40 */  NdrFcShort( 0x800a ),         /* Simple arm
type: FC_FLOAT */
/* 42 */  NdrFcLong( 0x5 ),   /* 5 */
/* 46 */  NdrFcShort( 0x800c ),         /* Simple arm
type: FC_DOUBLE */
/* 48 */  NdrFcLong( 0xb ),   /* 11 */
/* 52 */  NdrFcShort( 0x8006 ),         /* Simple arm
type: FC_SHORT */
/* 54 */  NdrFcLong( 0xa ),   /* 10 */
/* 58 */  NdrFcShort( 0x8008 ),         /* Simple arm
type: FC_LONG */
/* 60 */  NdrFcLong( 0x6 ),   /* 6 */
/* 64 */  NdrFcShort( 0xd6 ), /* Offset= 214 (278) */
/* 66 */  NdrFcLong( 0x7 ),   /* 7 */
/* 70 */  NdrFcShort( 0x800c ),         /* Simple arm
type: FC_DOUBLE */
/* 72 */  NdrFcLong( 0x8 ),   /* 8 */
/* 76 */  NdrFcShort( 0xd0 ), /* Offset= 208 (284) */
/* 78 */  NdrFcLong( 0xd ),   /* 13 */
/* 82 */  NdrFcShort( 0xe2 ), /* Offset= 226 (308) */
/* 84 */  NdrFcLong( 0x9 ),   /* 9 */
/* 88 */  NdrFcShort( 0xee ), /* Offset= 238 (326) */
/* 90 */  NdrFcLong( 0x2000 ),          /* 8192 */
/* 94 */  NdrFcShort( 0xfa ), /* Offset= 250 (344) */
/* 96 */  NdrFcLong( 0x24 ),  /* 36 */
/* 100 */ NdrFcShort( 0x308 ),          /* Offset=
776 (876) */
/* 102 */ NdrFcLong( 0x4024 ),          /* 16420 */
/* 106 */ NdrFcShort( 0x302 ),          /* Offset=
770 (876) */
/* 108 */ NdrFcLong( 0x4011 ),          /* 16401 */
/* 112 */ NdrFcShort( 0x300 ),          /* Offset=
768 (880) */
/* 114 */ NdrFcLong( 0x4002 ),          /* 16386 */
/* 118 */ NdrFcShort( 0x2fe ),          /* Offset=
766 (884) */
/* 120 */ NdrFcLong( 0x4003 ),          /* 16387 */
/* 124 */ NdrFcShort( 0x2fc ),          /* Offset=
764 (888) */
/* 126 */ NdrFcLong( 0x4004 ),          /* 16388 */
/* 130 */ NdrFcShort( 0x2fa ),          /* Offset=
762 (892) */
/* 132 */ NdrFcLong( 0x4005 ),          /* 16389 */
/* 136 */ NdrFcShort( 0x2f8 ),          /* Offset=
760 (896) */
/* 138 */ NdrFcLong( 0x400b ),          /* 16395 */
/* 142 */ NdrFcShort( 0x2e6 ),          /* Offset=
742 (884) */
/* 144 */ NdrFcLong( 0x400a ),          /* 16394 */
/* 148 */ NdrFcShort( 0x2e4 ),          /* Offset=
740 (888) */
/* 150 */ NdrFcLong( 0x4006 ),          /* 16390 */
/* 154 */ NdrFcShort( 0x2ea ),          /* Offset=
746 (900) */
/* 156 */ NdrFcLong( 0x4007 ),          /* 16391 */
/* 160 */ NdrFcShort( 0x2e0 ),          /* Offset=
736 (896) */
/* 162 */ NdrFcLong( 0x4008 ),          /* 16392 */
/* 166 */ NdrFcShort( 0x2e2 ),          /* Offset=
738 (904) */
/* 168 */ NdrFcLong( 0x400d ),          /* 16397 */
/* 172 */ NdrFcShort( 0x2e0 ),          /* Offset=
736 (908) */
/* 174 */ NdrFcLong( 0x4009 ),          /* 16393 */
/* 178 */ NdrFcShort( 0x2de ),          /* Offset=
734 (912) */
/* 180 */ NdrFcLong( 0x6000 ),          /* 24576 */
/* 184 */ NdrFcShort( 0x2dc ),          /* Offset=
732 (916) */
/* 186 */ NdrFcLong( 0x400c ),          /* 16396 */
/* 190 */ NdrFcShort( 0x2da ),          /* Offset=
730 (920) */
/* 192 */ NdrFcLong( 0x10 ),  /* 16 */
/* 196 */ NdrFcShort( 0x8002 ),         /* Simple arm
type: FC_CHAR */
/* 198 */ NdrFcLong( 0x12 ),  /* 18 */
/* 202 */ NdrFcShort( 0x8006 ),         /* Simple arm
type: FC_SHORT */
/* 204 */ NdrFcLong( 0x13 ),  /* 19 */
/* 208 */ NdrFcShort( 0x8008 ),         /* Simple arm
type: FC_LONG */
/* 210 */ NdrFcLong( 0x16 ),  /* 22 */
/* 214 */ NdrFcShort( 0x8008 ),         /* Simple arm
type: FC_LONG */
/* 216 */ NdrFcLong( 0x17 ),  /* 23 */
/* 220 */ NdrFcShort( 0x8008 ),         /* Simple arm
type: FC_LONG */
/* 222 */ NdrFcLong( 0xe ),   /* 14 */
/* 226 */ NdrFcShort( 0x2be ),          /* Offset=
702 (928) */
/* 228 */ NdrFcLong( 0x400e ),          /* 16398 */
/* 232 */ NdrFcShort( 0x2c4 ),          /* Offset=
708 (940) */
/* 234 */ NdrFcLong( 0x4010 ),          /* 16400 */
/* 238 */ NdrFcShort( 0x2c2 ),          /* Offset=
706 (944) */
/* 240 */ NdrFcLong( 0x4012 ),          /* 16402 */
/* 244 */ NdrFcShort( 0x280 ),          /* Offset=
640 (884) */
/* 246 */ NdrFcLong( 0x4013 ),          /* 16403 */
/* 250 */ NdrFcShort( 0x27e ),          /* Offset=
638 (888) */
/* 252 */ NdrFcLong( 0x4016 ),          /* 16406 */
/* 256 */ NdrFcShort( 0x278 ),          /* Offset=
632 (888) */
/* 258 */ NdrFcLong( 0x4017 ),          /* 16407 */
/* 262 */ NdrFcShort( 0x272 ),          /* Offset=
626 (888) */
/* 264 */ NdrFcLong( 0x0 ),   /* 0 */
/* 268 */ NdrFcShort( 0x0 ),  /* Offset= 0 (268) */
/* 270 */ NdrFcLong( 0x1 ),   /* 1 */
/* 274 */ NdrFcShort( 0x0 ),  /* Offset= 0 (274) */
/* 276 */ NdrFcShort( 0xffffffff ),     /* Offset= -1
(275) */
/* 278 */
                                0x15,               /*
FC_STRUCT */
                                0x7,                /*
7 */
/* 280 */ NdrFcShort( 0x8 ),  /* 8 */
/* 282 */ 0xb,                /* FC_HYPER */
                                0x5b,               /*
FC_END */
/* 284 */
                                0x12, 0x0,          /*
FC_UP */
/* 286 */ NdrFcShort( 0xc ),  /* Offset= 12 (298) */
/* 288 */
                                0x1b,               /*
FC_CARRAY */
                                0x1,                /*
1 */
/* 290 */ NdrFcShort( 0x2 ),  /* 2 */
/* 292 */ 0x9,                /* Corr desc: FC_ULONG
*/
                                0x0,                /*
*/
/* 294 */ NdrFcShort( 0xfffc ),         /* -4 */
/* 296 */ 0x6,                /* FC_SHORT */
                                0x5b,               /*
FC_END */
/* 298 */
                                0x17,               /*
FC_CSTRUCT */
                                0x3,                /*
3 */
/* 300 */ NdrFcShort( 0x8 ),  /* 8 */
/* 302 */ NdrFcShort( 0xfffffff2 ),     /* Offset= -
14 (288) */
/* 304 */ 0x8,                /* FC_LONG */
                                0x8,                /*
FC_LONG */
/* 306 */ 0x5c,               /* FC_PAD */
```


©2005 Hewlett-Packard Company. All rights reserved.

```
                                0x5b,               /*
FC_END */
/* 308 */
                                0x2f,               /*
FC_IP */
                                0x5a,               /*
FC_CONSTANT_IID */
/* 310 */ NdrFcLong( 0x0 ),   /* 0 */
/* 314 */ NdrFcShort( 0x0 ),  /* 0 */
/* 316 */ NdrFcShort( 0x0 ),  /* 0 */
/* 318 */ 0xc0,               /* 192 */
                                0x0,                /*
0 */
/* 320 */ 0x0,                /* 0 */
                                0x0,                /*
0 */
/* 322 */ 0x0,                /* 0 */
                                0x0,                /*
0 */
/* 324 */ 0x0,                /* 0 */
                                0x46,               /*
70 */
/* 326 */
                                0x2f,               /*
FC_IP */
                                0x5a,               /*
FC_CONSTANT_IID */
/* 328 */ NdrFcLong( 0x20400 ),         /* 132096 */
/* 332 */ NdrFcShort( 0x0 ),  /* 0 */
/* 334 */ NdrFcShort( 0x0 ),  /* 0 */
/* 336 */ 0xc0,               /* 192 */
                                0x0,                /*
0 */
/* 338 */ 0x0,                /* 0 */
                                0x0,                /*
0 */
/* 340 */ 0x0,                /* 0 */
                                0x0,                /*
0 */
/* 342 */ 0x0,                /* 0 */
                                0x46,               /*
70 */
/* 344 */
                                0x12, 0x10,         /*
FC_UP [pointer_deref] */
/* 346 */ NdrFcShort( 0x2 ),  /* Offset= 2 (348) */
/* 348 */
                                0x12, 0x0,          /*
FC_UP */
/* 350 */ NdrFcShort( 0x1fc ),          /* Offset=
508 (858) */
/* 352 */
                                0x2a,               /*
FC_ENCAPSULATED_UNION */
                                0x49,               /*
73 */
/* 354 */ NdrFcShort( 0x18 ), /* 24 */
/* 356 */ NdrFcShort( 0xa ),  /* 10 */
/* 358 */ NdrFcLong( 0x8 ),   /* 8 */
/* 362 */ NdrFcShort( 0x58 ), /* Offset= 88 (450) */
/* 364 */ NdrFcLong( 0xd ),   /* 13 */
/* 368 */ NdrFcShort( 0x78 ), /* Offset= 120 (488) */
/* 370 */ NdrFcLong( 0x9 ),   /* 9 */
/* 374 */ NdrFcShort( 0x94 ), /* Offset= 148 (522) */
/* 376 */ NdrFcLong( 0xc ),   /* 12 */
/* 380 */ NdrFcShort( 0xbc ), /* Offset= 188 (568) */
/* 382 */ NdrFcLong( 0x24 ),  /* 36 */
/* 386 */ NdrFcShort( 0x114 ),          /* Offset=
276 (662) */
/* 388 */ NdrFcLong( 0x800d ),          /* 32781 */
/* 392 */ NdrFcShort( 0x130 ),          /* Offset=
304 (696) */
/* 394 */ NdrFcLong( 0x10 ),  /* 16 */
/* 398 */ NdrFcShort( 0x148 ),          /* Offset=
328 (726) */
/* 400 */ NdrFcLong( 0x2 ),   /* 2 */
/* 404 */ NdrFcShort( 0x160 ),          /* Offset=
352 (756) */
/* 406 */ NdrFcLong( 0x3 ),   /* 3 */
/* 410 */ NdrFcShort( 0x178 ),          /* Offset=
376 (786) */
/* 412 */ NdrFcLong( 0x14 ),  /* 20 */
/* 416 */ NdrFcShort( 0x190 ),          /* Offset=
400 (816) */
/* 418 */ NdrFcShort( 0xffffffff ),     /* Offset= -1
(417) */
/* 420 */
                                0x1b,               /*
FC_CARRAY */
                                0x3,                /*
3 */
/* 422 */ NdrFcShort( 0x4 ),  /* 4 */
/* 424 */ 0x19,               /* Corr desc:  field
pointer, FC_ULONG */
                                0x0,                /*
*/
/* 426 */ NdrFcShort( 0x0 ),  /* 0 */
/* 428 */
                                0x4b,               /*
FC_PP */
                                0x5c,               /*
FC_PAD */
/* 430 */
                                0x48,               /*
FC_VARIABLE_REPEAT */
                                0x49,               /*
FC_FIXED_OFFSET */
/* 432 */ NdrFcShort( 0x4 ),  /* 4 */
/* 434 */ NdrFcShort( 0x0 ),  /* 0 */
/* 436 */ NdrFcShort( 0x1 ),  /* 1 */
/* 438 */ NdrFcShort( 0x0 ),  /* 0 */
/* 440 */ NdrFcShort( 0x0 ),  /* 0 */
/* 442 */ 0x12, 0x0,          /* FC_UP */
/* 444 */ NdrFcShort( 0xffffff6e ),     /* Offset= -
146 (298) */
/* 446 */
                                0x5b,               /*
FC_END */


                                0x8,                /*
FC_LONG */
/* 448 */ 0x5c,               /* FC_PAD */
                                0x5b,               /*
FC_END */
/* 450 */
                                0x16,               /*
FC_PSTRUCT */
                                0x3,                /*
3 */
/* 452 */ NdrFcShort( 0x8 ),  /* 8 */
/* 454 */
                                0x4b,               /*
FC_PP */
                                0x5c,               /*
FC_PAD */
/* 456 */
                                0x46,               /*
FC_NO_REPEAT */
                                0x5c,               /*
FC_PAD */
/* 458 */ NdrFcShort( 0x4 ),  /* 4 */
/* 460 */ NdrFcShort( 0x4 ),  /* 4 */
/* 462 */ 0x11, 0x0,          /* FC_RP */
/* 464 */ NdrFcShort( 0xffffffd4 ),     /* Offset= -
44 (420) */
/* 466 */
                                0x5b,               /*
FC_END */

                                0x8,                /*
FC_LONG */
/* 468 */ 0x8,                /* FC_LONG */
                                0x5b,               /*
FC_END */
/* 470 */
                                0x21,               /*
FC_BOGUS_ARRAY */
                                0x3,                /*
3 */
/* 472 */ NdrFcShort( 0x0 ),  /* 0 */
/* 474 */ 0x19,               /* Corr desc:  field
pointer, FC_ULONG */
                                0x0,                /*
*/
/* 476 */ NdrFcShort( 0x0 ),  /* 0 */
/* 478 */ NdrFcLong( 0xffffffff ),      /* -1 */
/* 482 */ 0x4c,               /* FC_EMBEDDED_COMPLEX
*/
                                0x0,                /*
0 */
/* 484 */ NdrFcShort( 0xffffff50 ),     /* Offset= -
176 (308) */
/* 486 */ 0x5c,               /* FC_PAD */
                                0x5b,               /*
FC_END */
/* 488 */
                                0x1a,               /*
FC_BOGUS_STRUCT */
                                0x3,                /*
3 */
/* 490 */ NdrFcShort( 0x8 ),  /* 8 */
/* 492 */ NdrFcShort( 0x0 ),  /* 0 */
/* 494 */ NdrFcShort( 0x6 ),  /* Offset= 6 (500) */
/* 496 */ 0x8,                /* FC_LONG */
                                0x36,               /*
FC_POINTER */
/* 498 */ 0x5c,               /* FC_PAD */
```


©2005 Hewlett-Packard Company. All rights reserved.

```
                                0x5b,               /*
FC_END */
/* 500 */
                                0x11, 0x0,          /*
FC_RP */
/* 502 */ NdrFcShort( 0xffffffe0 ),     /* Offset= -
32 (470) */
/* 504 */
                                0x21,               /*
FC_BOGUS_ARRAY */
                                0x3,                /*
3 */
/* 506 */ NdrFcShort( 0x0 ),  /* 0 */
/* 508 */ 0x19,               /* Corr desc:  field
pointer, FC_ULONG */
                                0x0,                /*
*/
/* 510 */ NdrFcShort( 0x0 ),  /* 0 */
/* 512 */ NdrFcLong( 0xffffffff ),      /* -1 */
/* 516 */ 0x4c,               /* FC_EMBEDDED_COMPLEX
*/
                                0x0,                /*
0 */
/* 518 */ NdrFcShort( 0xffffff40 ),     /* Offset= -
192 (326) */
/* 520 */ 0x5c,               /* FC_PAD */
                                0x5b,               /*
FC_END */
/* 522 */
                                0x1a,               /*
FC_BOGUS_STRUCT */
                                0x3,                /*
3 */
/* 524 */ NdrFcShort( 0x8 ),  /* 8 */
/* 526 */ NdrFcShort( 0x0 ),  /* 0 */
/* 528 */ NdrFcShort( 0x6 ),  /* Offset= 6 (534) */
/* 530 */ 0x8,                /* FC_LONG */
                                0x36,               /*
FC_POINTER */
/* 532 */ 0x5c,               /* FC_PAD */
                                0x5b,               /*
FC_END */
/* 534 */
                                0x11, 0x0,          /*
FC_RP */
/* 536 */ NdrFcShort( 0xffffffe0 ),     /* Offset= -
32 (504) */
/* 538 */
                                0x1b,               /*
FC_CARRAY */
                                0x3,                /*
3 */
/* 540 */ NdrFcShort( 0x4 ),  /* 4 */
/* 542 */ 0x19,               /* Corr desc:  field
pointer, FC_ULONG */
                                0x0,                /*
*/
/* 544 */ NdrFcShort( 0x0 ),  /* 0 */
/* 546 */
                                0x4b,               /*
FC_PP */
                                0x5c,               /*
FC_PAD */
/* 548 */
                                0x48,               /*
FC_VARIABLE_REPEAT */
                                0x49,               /*
FC_FIXED_OFFSET */
/* 550 */ NdrFcShort( 0x4 ),  /* 4 */
/* 552 */ NdrFcShort( 0x0 ),  /* 0 */
/* 554 */ NdrFcShort( 0x1 ),  /* 1 */
/* 556 */ NdrFcShort( 0x0 ),  /* 0 */
/* 558 */ NdrFcShort( 0x0 ),  /* 0 */
/* 560 */ 0x12, 0x0,          /* FC_UP */
/* 562 */ NdrFcShort( 0x182 ),          /* Offset=
386 (948) */
/* 564 */
                                0x5b,               /*
FC_END */

                                0x8,                /*
FC_LONG */
/* 566 */ 0x5c,               /* FC_PAD */
                                0x5b,               /*
FC_END */
/* 568 */
                                0x1a,               /*
FC_BOGUS_STRUCT */
                                0x3,                /*
3 */
/* 570 */ NdrFcShort( 0x8 ),  /* 8 */
/* 572 */ NdrFcShort( 0x0 ),  /* 0 */
/* 574 */ NdrFcShort( 0x6 ),  /* Offset= 6 (580) */
/* 576 */ 0x8,                /* FC_LONG */
                                0x36,               /*
FC_POINTER */
/* 578 */ 0x5c,               /* FC_PAD */
                                0x5b,               /*
FC_END */
/* 580 */
                                0x11, 0x0,          /*
FC_RP */
/* 582 */ NdrFcShort( 0xffffffd4 ),     /* Offset= -
44 (538) */
/* 584 */
                                0x2f,               /*
FC_IP */
                                0x5a,               /*
FC_CONSTANT_IID */
/* 586 */ NdrFcLong( 0x2f ),  /* 47 */
/* 590 */ NdrFcShort( 0x0 ),  /* 0 */
/* 592 */ NdrFcShort( 0x0 ),  /* 0 */
/* 594 */ 0xc0,               /* 192 */
                                0x0,                /*
0 */
/* 596 */ 0x0,                /* 0 */
                                0x0,                /*
0 */
/* 598 */ 0x0,                /* 0 */
                                0x0,                /*
0 */
/* 600 */ 0x0,                /* 0 */
                                0x46,               /*
70 */
/* 602 */
                                0x1b,               /*
FC_CARRAY */
                                0x0,                /*
0 */
/* 604 */ NdrFcShort( 0x1 ),  /* 1 */
/* 606 */ 0x19,               /* Corr desc:  field
pointer, FC_ULONG */
                                0x0,                /*
*/
/* 608 */ NdrFcShort( 0x4 ),  /* 4 */
/* 610 */ 0x1,                /* FC_BYTE */
                                0x5b,               /*
FC_END */
/* 612 */
                                0x1a,               /*
FC_BOGUS_STRUCT */
                                0x3,                /*
3 */
/* 614 */ NdrFcShort( 0x10 ), /* 16 */
/* 616 */ NdrFcShort( 0x0 ),  /* 0 */
/* 618 */ NdrFcShort( 0xa ),  /* Offset= 10 (628) */
/* 620 */ 0x8,                /* FC_LONG */
                                0x8,                /*
FC_LONG */
/* 622 */ 0x4c,               /* FC_EMBEDDED_COMPLEX
*/
                                0x0,                /*
0 */
/* 624 */ NdrFcShort( 0xffffffd8 ),     /* Offset= -
40 (584) */
/* 626 */ 0x36,               /* FC_POINTER */
                                0x5b,               /*
FC_END */
/* 628 */
                                0x12, 0x0,          /*
FC_UP */
/* 630 */ NdrFcShort( 0xffffffe4 ),     /* Offset= -
28 (602) */
/* 632 */
                                0x1b,               /*
FC_CARRAY */
                                0x3,                /*
3 */
/* 634 */ NdrFcShort( 0x4 ),  /* 4 */
/* 636 */ 0x19,               /* Corr desc:  field
pointer, FC_ULONG */
                                0x0,                /*
*/
/* 638 */ NdrFcShort( 0x0 ),  /* 0 */
/* 640 */
                                0x4b,               /*
FC_PP */
                                0x5c,               /*
FC_PAD */
/* 642 */
                                0x48,               /*
FC_VARIABLE_REPEAT */
                                0x49,               /*
FC_FIXED_OFFSET */
/* 644 */ NdrFcShort( 0x4 ),  /* 4 */
/* 646 */ NdrFcShort( 0x0 ),  /* 0 */
/* 648 */ NdrFcShort( 0x1 ),  /* 1 */
/* 650 */ NdrFcShort( 0x0 ),  /* 0 */
```


©2005 Hewlett-Packard Company. All rights reserved.

```
/* 652 */ NdrFcShort( 0x0 ),  /* 0 */
/* 654 */ 0x12, 0x0,          /* FC_UP */
/* 656 */ NdrFcShort( 0xffffffd4 ),     /* Offset= -
44 (612) */
/* 658 */
                              0x5b,               /*
FC_END */

                              0x8,                /*
FC_LONG */
/* 660 */ 0x5c,               /* FC_PAD */
                              0x5b,               /*
FC_END */
/* 662 */
                              0x1a,               /*
FC_BOGUS_STRUCT */
                              0x3,                /*
3 */
/* 664 */ NdrFcShort( 0x8 ),  /* 8 */
/* 666 */ NdrFcShort( 0x0 ),  /* 0 */
/* 668 */ NdrFcShort( 0x6 ),  /* Offset= 6 (674) */
/* 670 */ 0x8,                /* FC_LONG */
                              0x36,               /*
FC_POINTER */
/* 672 */ 0x5c,               /* FC_PAD */
                              0x5b,               /*
FC_END */
/* 674 */
                              0x11, 0x0,          /*
FC_RP */
/* 676 */ NdrFcShort( 0xffffffd4 ),     /* Offset= -
44 (632) */
/* 678 */
                              0x1d,               /*
FC_SMFARRAY */
                              0x0,                /*
0 */
/* 680 */ NdrFcShort( 0x8 ),  /* 8 */
/* 682 */ 0x1,                /* FC_BYTE */
                              0x5b,               /*
FC_END */
/* 684 */
                              0x15,               /*
FC_STRUCT */
                              0x3,                /*
3 */
/* 686 */ NdrFcShort( 0x10 ), /* 16 */
/* 688 */ 0x8,                /* FC_LONG */
                              0x6,                /*
FC_SHORT */
/* 690 */ 0x6,                /* FC_SHORT */
                              0x4c,               /*
FC_EMBEDDED_COMPLEX */
/* 692 */ 0x0,                /* 0 */
                              NdrFcShort( 0xfffffff1
),        /* Offset= -15 (678) */
                              0x5b,               /*
FC_END */
/* 696 */
                              0x1a,               /*
FC_BOGUS_STRUCT */
                              0x3,                /*
3 */
/* 698 */ NdrFcShort( 0x18 ), /* 24 */
/* 700 */ NdrFcShort( 0x0 ),  /* 0 */
/* 702 */ NdrFcShort( 0xa ),  /* Offset= 10 (712) */
/* 704 */ 0x8,                /* FC_LONG */
                              0x36,               /*
FC_POINTER */
/* 706 */ 0x4c,               /* FC_EMBEDDED_COMPLEX
*/
                              0x0,                /*
0 */
/* 708 */ NdrFcShort( 0xffffffe8 ),     /* Offset= -
24 (684) */
/* 710 */ 0x5c,               /* FC_PAD */
                              0x5b,               /*
FC_END */
/* 712 */
                              0x11, 0x0,          /*
FC_RP */
/* 714 */ NdrFcShort( 0xffffff0c ),     /* Offset= -
244 (470) */
/* 716 */
                              0x1b,               /*
FC_CARRAY */
                              0x0,                /*
0 */
/* 718 */ NdrFcShort( 0x1 ),  /* 1 */
/* 720 */ 0x19,               /* Corr desc:  field
pointer, FC_ULONG */
                              0x0,                /*
*/
/* 722 */ NdrFcShort( 0x0 ),  /* 0 */
/* 724 */ 0x1,                /* FC_BYTE */
                              0x5b,               /*
FC_END */
/* 726 */
                              0x16,               /*
FC_PSTRUCT */
                              0x3,                /*
3 */
/* 728 */ NdrFcShort( 0x8 ),  /* 8 */
/* 730 */
                              0x4b,               /*
FC_PP */
                              0x5c,               /*
FC_PAD */
/* 732 */
                              0x46,               /*
FC_NO_REPEAT */
                              0x5c,               /*
FC_PAD */
/* 734 */ NdrFcShort( 0x4 ),  /* 4 */
/* 736 */ NdrFcShort( 0x4 ),  /* 4 */
/* 738 */ 0x12, 0x0,          /* FC_UP */
/* 740 */ NdrFcShort( 0xffffffe8 ),     /* Offset= -
24 (716) */
/* 742 */
                              0x5b,               /*
FC_END */

                              0x8,                /*
FC_LONG */
/* 744 */ 0x8,                /* FC_LONG */
                              0x5b,               /*
FC_END */
/* 746 */
                              0x1b,               /*
FC_CARRAY */
                              0x1,                /*
1 */
/* 748 */ NdrFcShort( 0x2 ),  /* 2 */
/* 750 */ 0x19,               /* Corr desc:  field
pointer, FC_ULONG */
                              0x0,                /*
*/
/* 752 */ NdrFcShort( 0x0 ),  /* 0 */
/* 754 */ 0x6,                /* FC_SHORT */
                              0x5b,               /*
FC_END */
/* 756 */
                              0x16,               /*
FC_PSTRUCT */
                              0x3,                /*
3 */
/* 758 */ NdrFcShort( 0x8 ),  /* 8 */
/* 760 */
                              0x4b,               /*
FC_PP */
                              0x5c,               /*
FC_PAD */
/* 762 */
                              0x46,               /*
FC_NO_REPEAT */
                              0x5c,               /*
FC_PAD */
/* 764 */ NdrFcShort( 0x4 ),  /* 4 */
/* 766 */ NdrFcShort( 0x4 ),  /* 4 */
/* 768 */ 0x12, 0x0,          /* FC_UP */
/* 770 */ NdrFcShort( 0xffffffe8 ),     /* Offset= -
24 (746) */
/* 772 */
                              0x5b,               /*
FC_END */

                              0x8,                /*
FC_LONG */
/* 774 */ 0x8,                /* FC_LONG */
                              0x5b,               /*
FC_END */
/* 776 */
                              0x1b,               /*
FC_CARRAY */
                              0x3,                /*
3 */
/* 778 */ NdrFcShort( 0x4 ),  /* 4 */
/* 780 */ 0x19,               /* Corr desc:  field
pointer, FC_ULONG */
                              0x0,                /*
*/
/* 782 */ NdrFcShort( 0x0 ),  /* 0 */
/* 784 */ 0x8,                /* FC_LONG */
                              0x5b,               /*
FC_END */
/* 786 */
                              0x16,               /*
FC_PSTRUCT */
```


©2005 Hewlett-Packard Company. All rights reserved.

```
                                0x3,                /*
3 */
/* 788 */ NdrFcShort( 0x8 ),  /* 8 */
/* 790 */
                                0x4b,               /*
FC_PP */
                                0x5c,               /*
FC_PAD */
/* 792 */
                                0x46,               /*
FC_NO_REPEAT */
                                0x5c,               /*
FC_PAD */
/* 794 */ NdrFcShort( 0x4 ),  /* 4 */
/* 796 */ NdrFcShort( 0x4 ),  /* 4 */
/* 798 */ 0x12, 0x0,          /* FC_UP */
/* 800 */ NdrFcShort( 0xffffffe8 ),     /* Offset= -
24 (776) */
/* 802 */
                                0x5b,               /*
FC_END */

                                0x8,                /*
FC_LONG */
/* 804 */ 0x8,                /* FC_LONG */
                                0x5b,               /*
FC_END */
/* 806 */
                                0x1b,               /*
FC_CARRAY */
                                0x7,                /*
7 */
/* 808 */ NdrFcShort( 0x8 ),  /* 8 */
/* 810 */ 0x19,               /* Corr desc:  field
pointer, FC_ULONG */
                                0x0,                /*
*/
/* 812 */ NdrFcShort( 0x0 ),  /* 0 */
/* 814 */ 0xb,                /* FC_HYPER */
                                0x5b,               /*
FC_END */
/* 816 */
                                0x16,               /*
FC_PSTRUCT */
                                0x3,                /*
3 */
/* 818 */ NdrFcShort( 0x8 ),  /* 8 */
/* 820 */
                                0x4b,               /*
FC_PP */
                                0x5c,               /*
FC_PAD */
/* 822 */
                                0x46,               /*
FC_NO_REPEAT */
                                0x5c,               /*
FC_PAD */
/* 824 */ NdrFcShort( 0x4 ),  /* 4 */
/* 826 */ NdrFcShort( 0x4 ),  /* 4 */
/* 828 */ 0x12, 0x0,          /* FC_UP */
/* 830 */ NdrFcShort( 0xffffffe8 ),     /* Offset= -
24 (806) */
/* 832 */
                                0x5b,               /*
FC_END */

                                0x8,                /*
FC_LONG */
/* 834 */ 0x8,                /* FC_LONG */
                                0x5b,               /*
FC_END */
/* 836 */
                                0x15,               /*
FC_STRUCT */
                                0x3,                /*
3 */
/* 838 */ NdrFcShort( 0x8 ),  /* 8 */
/* 840 */ 0x8,                /* FC_LONG */
                                0x8,                /*
FC_LONG */
/* 842 */ 0x5c,               /* FC_PAD */
                                0x5b,               /*
FC_END */
/* 844 */
                                0x1b,               /*
FC_CARRAY */
                                0x3,                /*
3 */
/* 846 */ NdrFcShort( 0x8 ),  /* 8 */
/* 848 */ 0x7,                /* Corr desc: FC_USHORT
*/
                                0x0,                /*
*/
/* 850 */ NdrFcShort( 0xffd8 ),         /* -40 */
/* 852 */ 0x4c,               /* FC_EMBEDDED_COMPLEX
*/
                                0x0,                /*
0 */
/* 854 */ NdrFcShort( 0xffffffee ),     /* Offset= -
18 (836) */
/* 856 */ 0x5c,               /* FC_PAD */
                                0x5b,               /*
FC_END */
/* 858 */
                                0x1a,               /*
FC_BOGUS_STRUCT */
                                0x3,                /*
3 */
/* 860 */ NdrFcShort( 0x28 ), /* 40 */
/* 862 */ NdrFcShort( 0xffffffee ),     /* Offset= -
18 (844) */
/* 864 */ NdrFcShort( 0x0 ),  /* Offset= 0 (864) */
/* 866 */ 0x6,                /* FC_SHORT */
                                0x6,                /*
FC_SHORT */
/* 868 */ 0x38,               /* FC_ALIGNM4 */
                                0x8,                /*
FC_LONG */
/* 870 */ 0x8,                /* FC_LONG */
                                0x4c,               /*
FC_EMBEDDED_COMPLEX */
/* 872 */ 0x0,                /* 0 */
                                NdrFcShort( 0xfffffdf7
),        /* Offset= -521 (352) */
                                0x5b,               /*
FC_END */
/* 876 */
                                0x12, 0x0,          /*
FC_UP */
/* 878 */ NdrFcShort( 0xffffffef6 ),     /* Offset= -
266 (612) */
/* 880 */
                                0x12, 0x8,          /*
FC_UP [simple_pointer] */
/* 882 */ 0x1,                /* FC_BYTE */
                                0x5c,               /*
FC_PAD */
/* 884 */
                                0x12, 0x8,          /*
FC_UP [simple_pointer] */
/* 886 */ 0x6,                /* FC_SHORT */
                                0x5c,               /*
FC_PAD */
/* 888 */
                                0x12, 0x8,          /*
FC_UP [simple_pointer] */
/* 890 */ 0x8,                /* FC_LONG */
                                0x5c,               /*
FC_PAD */
/* 892 */
                                0x12, 0x8,          /*
FC_UP [simple_pointer] */
/* 894 */ 0xa,                /* FC_FLOAT */
                                0x5c,               /*
FC_PAD */
/* 896 */
                                0x12, 0x8,          /*
FC_UP [simple_pointer] */
/* 898 */ 0xc,                /* FC_DOUBLE */
                                0x5c,               /*
FC_PAD */
/* 900 */
                                0x12, 0x0,          /*
FC_UP */
/* 902 */ NdrFcShort( 0xffffffd90 ),     /* Offset= -
624 (278) */
/* 904 */
                                0x12, 0x10,         /*
FC_UP [pointer_deref] */
/* 906 */ NdrFcShort( 0xffffffd92 ),     /* Offset= -
622 (284) */
/* 908 */
                                0x12, 0x10,         /*
FC_UP [pointer_deref] */
/* 910 */ NdrFcShort( 0xffffffda6 ),     /* Offset= -
602 (308) */
/* 912 */
                                0x12, 0x10,         /*
FC_UP [pointer_deref] */
/* 914 */ NdrFcShort( 0xffffffdb4 ),     /* Offset= -
588 (326) */
/* 916 */
                                0x12, 0x10,         /*
FC_UP [pointer_deref] */
/* 918 */ NdrFcShort( 0xffffffdc2 ),     /* Offset= -
574 (344) */
/* 920 */
                                0x12, 0x10,         /*
FC_UP [pointer_deref] */
```


©2005 Hewlett-Packard Company. All rights reserved.

```
/* 922 */ NdrFcShort( 0x2 ),  /* Offset= 2 (924) */
/* 924 */
                              0x12, 0x0,          /*
FC_UP */
/* 926 */ NdrFcShort( 0x16 ), /* Offset= 22 (948) */
/* 928 */
                              0x15,               /*
FC_STRUCT */
                              0x7,                /*
7 */
/* 930 */ NdrFcShort( 0x10 ), /* 16 */
/* 932 */ 0x6,                /* FC_SHORT */
                              0x1,                /*
FC_BYTE */
/* 934 */ 0x1,                /* FC_BYTE */
                              0x38,               /*
FC_ALIGNM4 */
/* 936 */ 0x8,                /* FC_LONG */
                              0x39,               /*
FC_ALIGNM8 */
/* 938 */ 0xb,                /* FC_HYPER */
                              0x5b,               /*
FC_END */
/* 940 */
                              0x12, 0x0,          /*
FC_UP */
/* 942 */ NdrFcShort( 0xfffffff2 ),     /* Offset= -
14 (928) */
/* 944 */
                              0x12, 0x8,          /*
FC_UP [simple_pointer] */
/* 946 */ 0x2,                /* FC_CHAR */
                              0x5c,               /*
FC_PAD */
/* 948 */
                              0x1a,               /*
FC_BOGUS_STRUCT */
                              0x7,                /*
7 */
/* 950 */ NdrFcShort( 0x20 ), /* 32 */
/* 952 */ NdrFcShort( 0x0 ),  /* 0 */
/* 954 */ NdrFcShort( 0x0 ),  /* Offset= 0 (954) */
/* 956 */ 0x8,                /* FC_LONG */
                              0x8,                /*
FC_LONG */
/* 958 */ 0x6,                /* FC_SHORT */
                              0x6,                /*
FC_SHORT */
/* 960 */ 0x6,                /* FC_SHORT */
                              0x6,                /*
FC_SHORT */
/* 962 */ 0x4c,               /* FC_EMBEDDED_COMPLEX
*/
                              0x0,                /*
0 */
/* 964 */ NdrFcShort( 0xfffffc42 ),     /* Offset= -
958 (6) */
/* 966 */ 0x5c,               /* FC_PAD */
                              0x5b,               /*
FC_END */
/* 968 */ 0xb4,               /* FC_USER_MARSHAL */
                              0x83,               /*
131 */
/* 970 */ NdrFcShort( 0x0 ),  /* 0 */
/* 972 */ NdrFcShort( 0x10 ), /* 16 */
/* 974 */ NdrFcShort( 0x0 ),  /* 0 */
/* 976 */ NdrFcShort( 0xfffffc32 ),     /* Offset= -
974 (2) */
/* 978 */
                              0x11, 0x4,          /*
FC_RP [alloced_on_stack] */
/* 980 */ NdrFcShort( 0x6 ),  /* Offset= 6 (986) */
/* 982 */
                              0x13, 0x0,          /*
FC_OP */
/* 984 */ NdrFcShort( 0xfffffffdc ),     /* Offset= -
36 (948) */
/* 986 */ 0xb4,               /* FC_USER_MARSHAL */
                              0x83,               /*
131 */
/* 988 */ NdrFcShort( 0x0 ),  /* 0 */
/* 990 */ NdrFcShort( 0x10 ), /* 16 */
/* 992 */ NdrFcShort( 0x0 ),  /* 0 */
/* 994 */ NdrFcShort( 0xfffffff4 ),     /* Offset= -
12 (982) */

                              0x0
        }
    };

const CInterfaceProxyVtbl *
_tpcc_com_ps_ProxyVtblList[] =
{
    ( CInterfaceProxyVtbl *) &_ITPCCProxyVtbl,
    0
};

const CInterfaceStubVtbl *
_tpcc_com_ps_StubVtblList[] =
{
    ( CInterfaceStubVtbl *) &_ITPCCStubVtbl,
    0
};

PCInterfaceName const
_tpcc_com_ps_InterfaceNamesList[] =
{
    "ITPCC",
    0
};


#define _tpcc_com_ps_CHECK_IID(n)
          IID_GENERIC_CHECK_IID( _tpcc_com_ps, pIID,
n)

int __stdcall _tpcc_com_ps_IID_Lookup( const IID *
pIID, int * pIndex )
{

    if(!_tpcc_com_ps_CHECK_IID(0))
        {
        *pIndex = 0;
        return 1;
        }
    return 0;
}

const ExtendedProxyFileInfo tpcc_com_ps_ProxyFileInfo
=
{
    (PCInterfaceProxyVtblList *) &
_tpcc_com_ps_ProxyVtblList,
    (PCInterfaceStubVtblList *) &
_tpcc_com_ps_StubVtblList,
    (const PCInterfaceName * ) &
_tpcc_com_ps_InterfaceNamesList,
    0, // no delegation
    & _tpcc_com_ps_IID_Lookup,
    1,
    2,
    0, /* table of [async_uuid] interfaces */
    0, /* Filler1 */
    0, /* Filler2 */
    0  /* Filler3 */
};


#endif /* !defined(_M_IA64) && !defined(_M_AXP64)*/


#pragma warning( disable: 4049 )  /* more than 64k
source lines */

/* this ALWAYS GENERATED file contains the proxy stub
code */


 /* File created by MIDL compiler version 5.03.0280
*/
/* at Thu Dec 13 23:13:08 2001
 */
/* Compiler settings for .\src\tpcc_com_ps.idl:
    Oicf (OptLev=i2), W1, Zp8, env=Win64 (32b
run,appending), ms_ext, c_ext, robust
    error checks: allocation ref bounds_check enum
stub_data
    VC __declspec() decoration level:
         __declspec(uuid()), __declspec(selectany),
__declspec(novtable)
         DECLSPEC_UUID(), MIDL_INTERFACE()
*/
//@@MIDL_FILE_HEADING(  )

#if defined(_M_IA64) || defined(_M_AXP64)
#define USE_STUBLESS_PROXY


/* verify that the <rpcproxy.h> version is high
enough to compile this file*/
#ifndef __REDQ_RPCPROXY_H_VERSION__
#define __REQUIRED_RPCPROXY_H_VERSION__ 475
#endif


#include "rpcproxy.h"
#ifndef __RPCPROXY_H_VERSION__
```


©2005 Hewlett-Packard Company. All rights reserved.

```
#error this stub requires an updated version of
<rpcproxy.h>
#endif // __RPCPROXY_H_VERSION__


#include "tpcc_com_ps.h"

#define TYPE_FORMAT_STRING_SIZE   979
#define PROC_FORMAT_STRING_SIZE   253
#define TRANSMIT_AS_TABLE_SIZE    0
#define WIRE_MARSHAL_TABLE_SIZE   1

typedef struct _MIDL_TYPE_FORMAT_STRING
    {
    short          Pad;
    unsigned char  Format[ TYPE_FORMAT_STRING_SIZE ];
    } MIDL_TYPE_FORMAT_STRING;

typedef struct _MIDL_PROC_FORMAT_STRING
    {
    short          Pad;
    unsigned char  Format[ PROC_FORMAT_STRING_SIZE ];
    } MIDL_PROC_FORMAT_STRING;


extern const MIDL_TYPE_FORMAT_STRING
__MIDL_TypeFormatString;
extern const MIDL_PROC_FORMAT_STRING
__MIDL_ProcFormatString;


/* Standard interface: __MIDL_itf_tpcc_com_ps_0000,
ver. 0.0,

GUID={0x00000000,0x0000,0x0000,{0x00,0x00,0x00,0x00,0
x00,0x00,0x00,0x00}} */


/* Object interface: IUnknown, ver. 0.0,

GUID={0x00000000,0x0000,0x0000,{0xC0,0x00,0x00,0x00,0
x00,0x00,0x00,0x46}} */


/* Object interface: ITPCC, ver. 0.0,

GUID={0xFEEE6AA2,0x84B1,0x11d2,{0xBA,0x47,0x00,0xC0,0
x4F,0xBF,0xE0,0x8B}} */


extern const MIDL_STUB_DESC Object_StubDesc;


extern const MIDL_SERVER_INFO ITPCC_ServerInfo;

#pragma code_seg(".orpc")
static const unsigned short
ITPCC_FormatStringOffsetTable[] =
    {
    0,
    44,
    88,
    132,
    176,
    220
    };

static const MIDL_SERVER_INFO ITPCC_ServerInfo =
    {
    &Object_StubDesc,
    0,
    __MIDL_ProcFormatString.Format,
    &ITPCC_FormatStringOffsetTable[-3],
    0,
    0,
    0,
    0
    };

static const MIDL_STUBLESS_PROXY_INFO ITPCC_ProxyInfo
=
    {
    &Object_StubDesc,
    __MIDL_ProcFormatString.Format,
    &ITPCC_FormatStringOffsetTable[-3],
    0,
    0,
    0
    };


CINTERFACE_PROXY_VTABLE(9) _ITPCCProxyVtbl =
{
    &ITPCC_ProxyInfo,
    &IID_ITPCC,
    IUnknown_QueryInterface_Proxy,
    IUnknown_AddRef_Proxy,
    IUnknown_Release_Proxy ,
    (void *)-1 /* ITPCC::NewOrder */ ,
    (void *)-1 /* ITPCC::Payment */ ,
    (void *)-1 /* ITPCC::Delivery */ ,
    (void *)-1 /* ITPCC::StockLevel */ ,
    (void *)-1 /* ITPCC::OrderStatus */ ,
    (void *)-1 /* ITPCC::CallSetComplete */
};

const CInterfaceStubVtbl _ITPCCStubVtbl =
{
    &IID_ITPCC,
    &ITPCC_ServerInfo,
    9,
    0, /* pure interpreted */
    CStdStubBuffer_METHODS
};

extern const USER_MARSHAL_ROUTINE_QUADRUPLE
UserMarshalRoutines[ WIRE_MARSHAL_TABLE_SIZE ];

static const MIDL_STUB_DESC Object_StubDesc =
    {
    0,
    NdrOleAllocate,
    NdrOleFree,
    0,
    0,
    0,
    0,
    __MIDL_TypeFormatString.Format,
    1, /* -error bounds_check flag */
    0x50002, /* Ndr library version */
    0,
    0x5030118, /* MIDL Version 5.3.280 */
    0,
    UserMarshalRoutines,
    0,  /* notify & notify_flag routine table */
    0x1, /* MIDL flag */
    0,  /* Reserved3 */
    0,  /* Reserved4 */
    0   /* Reserved5 */
    };

#pragma data_seg(".rdata")

static const USER_MARSHAL_ROUTINE_QUADRUPLE
UserMarshalRoutines[ WIRE_MARSHAL_TABLE_SIZE ] =
        {

            {
            VARIANT_UserSize
            ,VARIANT_UserMarshal
            ,VARIANT_UserUnmarshal
            ,VARIANT_UserFree
            }

        };


#if !defined(__RPC_WIN64__)
#error  Invalid build platform for this stub.
#endif

static const MIDL_PROC_FORMAT_STRING
__MIDL_ProcFormatString =
    {
        0,
        {

          /* Procedure NewOrder */

                                0x33,               /*
FC_AUTO_HANDLE */
                                0x6c,               /*
Old Flags:  object, Oi2 */
/*  2 */  NdrFcLong( 0x0 ),   /* 0 */
/*  6 */  NdrFcShort( 0x3 ),  /* 3 */
#ifndef _ALPHA_
/*  8 */  NdrFcShort( 0x38 ), /* ia64 Stack
size/offset = 56 */
#else
                                NdrFcShort( 0x30 ), /*
axp64 Stack size/offset = 48 */
#endif
/* 10 */  NdrFcShort( 0x0 ),  /* 0 */
/* 12 */  NdrFcShort( 0x8 ),  /* 8 */
/* 14 */  0x47,               /* Oi2 Flags:  srv must
size, clt must size, has return, has ext, */
                                0x3,                /*
3 */
/* 16 */  0xa,                /* 10 */
```


©2005 Hewlett-Packard Company. All rights reserved.

```
                                0x7,                /*
Ext Flags:  new corr desc, clt corr check, srv corr
check, */
/* 18 */  NdrFcShort( 0x20 ), /* 32 */
/* 20 */  NdrFcShort( 0x20 ), /* 32 */
/* 22 */  NdrFcShort( 0x0 ),  /* 0 */
/* 24 */  NdrFcShort( 0x0 ),  /* 0 */

          /* Parameter txn_in */

/* 26 */  NdrFcShort( 0x8b ), /* Flags:  must size,
must free, in, by val, */
#ifndef _ALPHA_
/* 28 */  NdrFcShort( 0x10 ), /* ia64 Stack
size/offset = 16 */
#else
                                NdrFcShort( 0x8 ),  /*
axp64 Stack size/offset = 8 */
#endif
/* 30 */  NdrFcShort( 0x3b6 ),          /* Type
Offset=950 */

          /* Parameter txn_out */

/* 32 */  NdrFcShort( 0x6113 ),         /* Flags:
must size, must free, out, simple ref, srv alloc
size=24 */
#ifndef _ALPHA_
/* 34 */  NdrFcShort( 0x28 ), /* ia64 Stack
size/offset = 40 */
#else
                                NdrFcShort( 0x20 ), /*
axp64 Stack size/offset = 32 */
#endif
/* 36 */  NdrFcShort( 0x3c8 ),          /* Type
Offset=968 */

          /* Return value */

/* 38 */  NdrFcShort( 0x70 ), /* Flags:  out, return,
base type, */
#ifndef _ALPHA_
/* 40 */  NdrFcShort( 0x30 ), /* ia64 Stack
size/offset = 48 */
#else
                                NdrFcShort( 0x28 ), /*
axp64 Stack size/offset = 40 */
#endif
/* 42 */  0x8,                /* FC_LONG */
                                0x0,                /*
0 */

          /* Procedure Payment */

/* 44 */  0x33,               /* FC_AUTO_HANDLE */
                                0x6c,               /*
Old Flags:  object, Oi2 */
/* 46 */  NdrFcLong( 0x0 ),   /* 0 */
/* 50 */  NdrFcShort( 0x4 ),  /* 4 */
#ifndef _ALPHA_
/* 52 */  NdrFcShort( 0x38 ), /* ia64 Stack
size/offset = 56 */
#else
                                NdrFcShort( 0x30 ), /*
axp64 Stack size/offset = 48 */
#endif
/* 54 */  NdrFcShort( 0x0 ),  /* 0 */
/* 56 */  NdrFcShort( 0x8 ),  /* 8 */
/* 58 */  0x47,               /* Oi2 Flags:  srv must
size, clt must size, has return, has ext, */
                                0x3,                /*
3 */
/* 60 */  0xa,                /* 10 */
                                0x7,                /*
Ext Flags:  new corr desc, clt corr check, srv corr
check, */
/* 62 */  NdrFcShort( 0x20 ), /* 32 */
/* 64 */  NdrFcShort( 0x20 ), /* 32 */
/* 66 */  NdrFcShort( 0x0 ),  /* 0 */
/* 68 */  NdrFcShort( 0x0 ),  /* 0 */

          /* Parameter txn_in */

/* 70 */  NdrFcShort( 0x8b ), /* Flags:  must size,
must free, in, by val, */
#ifndef _ALPHA_
/* 72 */  NdrFcShort( 0x10 ), /* ia64 Stack
size/offset = 16 */
#else
                                NdrFcShort( 0x8 ),  /*
axp64 Stack size/offset = 8 */
#endif
/* 74 */  NdrFcShort( 0x3b6 ),          /* Type
Offset=950 */

          /* Parameter txn_out */

/* 76 */  NdrFcShort( 0x6113 ),         /* Flags:
must size, must free, out, simple ref, srv alloc
size=24 */
#ifndef _ALPHA_
/* 78 */  NdrFcShort( 0x28 ), /* ia64 Stack
size/offset = 40 */
#else
                                NdrFcShort( 0x20 ), /*
axp64 Stack size/offset = 32 */
#endif
/* 80 */  NdrFcShort( 0x3c8 ),          /* Type
Offset=968 */

          /* Return value */

/* 82 */  NdrFcShort( 0x70 ), /* Flags:  out, return,
base type, */
#ifndef _ALPHA_
/* 84 */  NdrFcShort( 0x30 ), /* ia64 Stack
size/offset = 48 */
#else
                                NdrFcShort( 0x28 ), /*
axp64 Stack size/offset = 40 */
#endif
/* 86 */  0x8,                /* FC_LONG */
                                0x0,                /*
0 */

          /* Procedure Delivery */

/* 88 */  0x33,               /* FC_AUTO_HANDLE */
                                0x6c,               /*
Old Flags:  object, Oi2 */
/* 90 */  NdrFcLong( 0x0 ),   /* 0 */
/* 94 */  NdrFcShort( 0x5 ),  /* 5 */
#ifndef _ALPHA_
/* 96 */  NdrFcShort( 0x38 ), /* ia64 Stack
size/offset = 56 */
#else
                                NdrFcShort( 0x30 ), /*
axp64 Stack size/offset = 48 */
#endif
/* 98 */  NdrFcShort( 0x0 ),  /* 0 */
/* 100 */ NdrFcShort( 0x8 ),  /* 8 */
/* 102 */ 0x47,               /* Oi2 Flags:  srv must
size, clt must size, has return, has ext, */
                                0x3,                /*
3 */
/* 104 */ 0xa,                /* 10 */
                                0x7,                /*
Ext Flags:  new corr desc, clt corr check, srv corr
check, */
/* 106 */ NdrFcShort( 0x20 ), /* 32 */
/* 108 */ NdrFcShort( 0x20 ), /* 32 */
/* 110 */ NdrFcShort( 0x0 ),  /* 0 */
/* 112 */ NdrFcShort( 0x0 ),  /* 0 */

          /* Parameter txn_in */

/* 114 */ NdrFcShort( 0x8b ), /* Flags:  must size,
must free, in, by val, */
#ifndef _ALPHA_
/* 116 */ NdrFcShort( 0x10 ), /* ia64 Stack
size/offset = 16 */
#else
                                NdrFcShort( 0x8 ),  /*
axp64 Stack size/offset = 8 */
#endif
/* 118 */ NdrFcShort( 0x3b6 ),          /* Type
Offset=950 */

          /* Parameter txn_out */

/* 120 */ NdrFcShort( 0x6113 ),         /* Flags:
must size, must free, out, simple ref, srv alloc
size=24 */
#ifndef _ALPHA_
/* 122 */ NdrFcShort( 0x28 ), /* ia64 Stack
size/offset = 40 */
#else
                                NdrFcShort( 0x20 ), /*
axp64 Stack size/offset = 32 */
#endif
/* 124 */ NdrFcShort( 0x3c8 ),          /* Type
Offset=968 */

          /* Return value */

/* 126 */ NdrFcShort( 0x70 ), /* Flags:  out, return,
base type, */
#ifndef _ALPHA_
```


©2005 Hewlett-Packard Company. All rights reserved.

```
/* 128 */ NdrFcShort( 0x30 ), /* ia64 Stack
size/offset = 48 */
#else
                                NdrFcShort( 0x28 ), /*
axp64 Stack size/offset = 40 */
#endif
/* 130 */ 0x8,                  /* FC_LONG */
                                0x0,                /*
0 */

          /* Procedure StockLevel */

/* 132 */ 0x33,                 /* FC_AUTO_HANDLE */
                                0x6c,               /*
Old Flags:  object, Oi2 */
/* 134 */ NdrFcLong( 0x0 ),     /* 0 */
/* 138 */ NdrFcShort( 0x6 ),    /* 6 */
#ifndef _ALPHA_
/* 140 */ NdrFcShort( 0x38 ), /* ia64 Stack
size/offset = 56 */
#else
                                NdrFcShort( 0x30 ), /*
axp64 Stack size/offset = 48 */
#endif
/* 142 */ NdrFcShort( 0x0 ),    /* 0 */
/* 144 */ NdrFcShort( 0x8 ),    /* 8 */
/* 146 */ 0x47,                 /* Oi2 Flags:  srv must
size, clt must size, has return, has ext, */
                                0x3,                /*
3 */
/* 148 */ 0xa,                  /* 10 */
                                0x7,                /*
Ext Flags:  new corr desc, clt corr check, srv corr
check, */
/* 150 */ NdrFcShort( 0x20 ), /* 32 */
/* 152 */ NdrFcShort( 0x20 ), /* 32 */
/* 154 */ NdrFcShort( 0x0 ),    /* 0 */
/* 156 */ NdrFcShort( 0x0 ),    /* 0 */

          /* Parameter txn_in */

/* 158 */ NdrFcShort( 0x8b ), /* Flags:  must size,
must free, in, by val, */
#ifndef _ALPHA_
/* 160 */ NdrFcShort( 0x10 ), /* ia64 Stack
size/offset = 16 */
#else
                                NdrFcShort( 0x8 ),  /*
axp64 Stack size/offset = 8 */
#endif
/* 162 */ NdrFcShort( 0x3b6 ),          /* Type
Offset=950 */

          /* Parameter txn_out */

/* 164 */ NdrFcShort( 0x6113 ),         /* Flags:
must size, must free, out, simple ref, srv alloc
size=24 */
#ifndef _ALPHA_
/* 166 */ NdrFcShort( 0x28 ), /* ia64 Stack
size/offset = 40 */
#else
                                NdrFcShort( 0x20 ), /*
axp64 Stack size/offset = 32 */
#endif
/* 168 */ NdrFcShort( 0x3c8 ),          /* Type
Offset=968 */

          /* Return value */

/* 170 */ NdrFcShort( 0x70 ), /* Flags:  out, return,
base type, */
#ifndef _ALPHA_
/* 172 */ NdrFcShort( 0x30 ), /* ia64 Stack
size/offset = 48 */
#else
                                NdrFcShort( 0x28 ), /*
axp64 Stack size/offset = 40 */
#endif
/* 174 */ 0x8,                  /* FC_LONG */
                                0x0,                /*
0 */

          /* Procedure OrderStatus */

/* 176 */ 0x33,                 /* FC_AUTO_HANDLE */
                                0x6c,               /*
Old Flags:  object, Oi2 */
/* 178 */ NdrFcLong( 0x0 ),     /* 0 */
/* 182 */ NdrFcShort( 0x7 ),    /* 7 */
#ifndef _ALPHA_
/* 184 */ NdrFcShort( 0x38 ), /* ia64 Stack
size/offset = 56 */
#else
                                NdrFcShort( 0x30 ), /*
axp64 Stack size/offset = 48 */
#endif
/* 186 */ NdrFcShort( 0x0 ),    /* 0 */
/* 188 */ NdrFcShort( 0x8 ),    /* 8 */
/* 190 */ 0x47,                 /* Oi2 Flags:  srv must
size, clt must size, has return, has ext, */
                                0x3,                /*
3 */
/* 192 */ 0xa,                  /* 10 */
                                0x7,                /*
Ext Flags:  new corr desc, clt corr check, srv corr
check, */
/* 194 */ NdrFcShort( 0x20 ), /* 32 */
/* 196 */ NdrFcShort( 0x20 ), /* 32 */
/* 198 */ NdrFcShort( 0x0 ),    /* 0 */
/* 200 */ NdrFcShort( 0x0 ),    /* 0 */

          /* Parameter txn_in */

/* 202 */ NdrFcShort( 0x8b ), /* Flags:  must size,
must free, in, by val, */
#ifndef _ALPHA_
/* 204 */ NdrFcShort( 0x10 ), /* ia64 Stack
size/offset = 16 */
#else
                                NdrFcShort( 0x8 ),  /*
axp64 Stack size/offset = 8 */
#endif
/* 206 */ NdrFcShort( 0x3b6 ),          /* Type
Offset=950 */

          /* Parameter txn_out */

/* 208 */ NdrFcShort( 0x6113 ),         /* Flags:
must size, must free, out, simple ref, srv alloc
size=24 */
#ifndef _ALPHA_
/* 210 */ NdrFcShort( 0x28 ), /* ia64 Stack
size/offset = 40 */
#else
                                NdrFcShort( 0x20 ), /*
axp64 Stack size/offset = 32 */
#endif
/* 212 */ NdrFcShort( 0x3c8 ),          /* Type
Offset=968 */

          /* Return value */

/* 214 */ NdrFcShort( 0x70 ), /* Flags:  out, return,
base type, */
#ifndef _ALPHA_
/* 216 */ NdrFcShort( 0x30 ), /* ia64 Stack
size/offset = 48 */
#else
                                NdrFcShort( 0x28 ), /*
axp64 Stack size/offset = 40 */
#endif
/* 218 */ 0x8,                  /* FC_LONG */
                                0x0,                /*
0 */

          /* Procedure CallSetComplete */

/* 220 */ 0x33,                 /* FC_AUTO_HANDLE */
                                0x6c,               /*
Old Flags:  object, Oi2 */
/* 222 */ NdrFcLong( 0x0 ),     /* 0 */
/* 226 */ NdrFcShort( 0x8 ),    /* 8 */
/* 228 */ NdrFcShort( 0x10 ), /* ia64, axp64 Stack
size/offset = 16 */
/* 230 */ NdrFcShort( 0x0 ),    /* 0 */
/* 232 */ NdrFcShort( 0x8 ),    /* 8 */
/* 234 */ 0x44,                 /* Oi2 Flags:  has
return, has ext, */
                                0x1,                /*
1 */
/* 236 */ 0xa,                  /* 10 */
                                0x1,                /*
Ext Flags:  new corr desc, */
/* 238 */ NdrFcShort( 0x0 ),    /* 0 */
/* 240 */ NdrFcShort( 0x0 ),    /* 0 */
/* 242 */ NdrFcShort( 0x0 ),    /* 0 */
/* 244 */ NdrFcShort( 0x0 ),    /* 0 */

          /* Return value */

/* 246 */ NdrFcShort( 0x70 ), /* Flags:  out, return,
base type, */
/* 248 */ NdrFcShort( 0x8 ),    /* ia64, axp64 Stack
size/offset = 8 */
/* 250 */ 0x8,                  /* FC_LONG */
                                0x0,                /*
0 */
```


©2005 Hewlett-Packard Company. All rights reserved.

```
                                0x0
        }
    };

static const MIDL_TYPE_FORMAT_STRING
__MIDL_TypeFormatString =
    {
        0,
        {
                                NdrFcShort( 0x0 ),  /*
0 */
/*  2 */
                                0x12, 0x0,          /*
FC_UP */
/*  4 */  NdrFcShort( 0x39e ),          /* Offset=
926 (930) */
/*  6 */
                                0x2b,               /*
FC_NON_ENCAPSULATED_UNION */
                                0x9,                /*
FC_ULONG */
/*  8 */  0x7,                /* Corr desc: FC_USHORT
*/
                                0x0,                /*
*/
/* 10 */  NdrFcShort( 0xfff8 ),         /* -8 */
/* 12 */  NdrFcShort( 0x1 ),  /* Corr flags:  early,
*/
/* 14 */  NdrFcShort( 0x2 ),  /* Offset= 2 (16) */
/* 16 */  NdrFcShort( 0x10 ), /* 16 */
/* 18 */  NdrFcShort( 0x2b ), /* 43 */
/* 20 */  NdrFcLong( 0x3 ),   /* 3 */
/* 24 */  NdrFcShort( 0x8008 ),         /* Simple arm
type: FC_LONG */
/* 26 */  NdrFcLong( 0x11 ),  /* 17 */
/* 30 */  NdrFcShort( 0x8001 ),         /* Simple arm
type: FC_BYTE */
/* 32 */  NdrFcLong( 0x2 ),   /* 2 */
/* 36 */  NdrFcShort( 0x8006 ),         /* Simple arm
type: FC_SHORT */
/* 38 */  NdrFcLong( 0x4 ),   /* 4 */
/* 42 */  NdrFcShort( 0x800a ),         /* Simple arm
type: FC_FLOAT */
/* 44 */  NdrFcLong( 0x5 ),   /* 5 */
/* 48 */  NdrFcShort( 0x800c ),         /* Simple arm
type: FC_DOUBLE */
/* 50 */  NdrFcLong( 0xb ),   /* 11 */
/* 54 */  NdrFcShort( 0x8006 ),         /* Simple arm
type: FC_SHORT */
/* 56 */  NdrFcLong( 0xa ),   /* 10 */
/* 60 */  NdrFcShort( 0x8008 ),         /* Simple arm
type: FC_LONG */
/* 62 */  NdrFcLong( 0x6 ),   /* 6 */
/* 66 */  NdrFcShort( 0xd6 ), /* Offset= 214 (280) */
/* 68 */  NdrFcLong( 0x7 ),   /* 7 */
/* 72 */  NdrFcShort( 0x800c ),         /* Simple arm
type: FC_DOUBLE */
/* 74 */  NdrFcLong( 0x8 ),   /* 8 */
/* 78 */  NdrFcShort( 0xd0 ), /* Offset= 208 (286) */
/* 80 */  NdrFcLong( 0xd ),   /* 13 */
/* 84 */  NdrFcShort( 0xe4 ), /* Offset= 228 (312) */
/* 86 */  NdrFcLong( 0x9 ),   /* 9 */
/* 90 */  NdrFcShort( 0xf0 ), /* Offset= 240 (330) */
/* 92 */  NdrFcLong( 0x2000 ),          /* 8192 */
/* 96 */  NdrFcShort( 0xfc ), /* Offset= 252 (348) */
/* 98 */  NdrFcLong( 0x24 ),  /* 36 */
/* 102 */ NdrFcShort( 0x2f4 ),          /* Offset=
756 (858) */
/* 104 */ NdrFcLong( 0x4024 ),          /* 16420 */
/* 108 */ NdrFcShort( 0x2ee ),          /* Offset=
750 (858) */
/* 110 */ NdrFcLong( 0x4011 ),          /* 16401 */
/* 114 */ NdrFcShort( 0x2ec ),          /* Offset=
748 (862) */
/* 116 */ NdrFcLong( 0x4002 ),          /* 16386 */
/* 120 */ NdrFcShort( 0x2ea ),          /* Offset=
746 (866) */
/* 122 */ NdrFcLong( 0x4003 ),          /* 16387 */
/* 126 */ NdrFcShort( 0x2e8 ),          /* Offset=
744 (870) */
/* 128 */ NdrFcLong( 0x4004 ),          /* 16388 */
/* 132 */ NdrFcShort( 0x2e6 ),          /* Offset=
742 (874) */
/* 134 */ NdrFcLong( 0x4005 ),          /* 16389 */
/* 138 */ NdrFcShort( 0x2e4 ),          /* Offset=
740 (878) */
/* 140 */ NdrFcLong( 0x400b ),          /* 16395 */
/* 144 */ NdrFcShort( 0x2d2 ),          /* Offset=
722 (866) */
/* 146 */ NdrFcLong( 0x400a ),          /* 16394 */
/* 150 */ NdrFcShort( 0x2d0 ),          /* Offset=
720 (870) */
/* 152 */ NdrFcLong( 0x4006 ),          /* 16390 */
/* 156 */ NdrFcShort( 0x2d6 ),          /* Offset=
726 (882) */
/* 158 */ NdrFcLong( 0x4007 ),          /* 16391 */
/* 162 */ NdrFcShort( 0x2cc ),          /* Offset=
716 (878) */
/* 164 */ NdrFcLong( 0x4008 ),          /* 16392 */
/* 168 */ NdrFcShort( 0x2ce ),          /* Offset=
718 (886) */
/* 170 */ NdrFcLong( 0x400d ),          /* 16397 */
/* 174 */ NdrFcShort( 0x2cc ),          /* Offset=
716 (890) */
/* 176 */ NdrFcLong( 0x4009 ),          /* 16393 */
/* 180 */ NdrFcShort( 0x2ca ),          /* Offset=
714 (894) */
/* 182 */ NdrFcLong( 0x6000 ),          /* 24576 */
/* 186 */ NdrFcShort( 0x2c8 ),          /* Offset=
712 (898) */
/* 188 */ NdrFcLong( 0x400c ),          /* 16396 */
/* 192 */ NdrFcShort( 0x2c6 ),          /* Offset=
710 (902) */
/* 194 */ NdrFcLong( 0x10 ),  /* 16 */
/* 198 */ NdrFcShort( 0x8002 ),         /* Simple arm
type: FC_CHAR */
/* 200 */ NdrFcLong( 0x12 ),  /* 18 */
/* 204 */ NdrFcShort( 0x8006 ),         /* Simple arm
type: FC_SHORT */
/* 206 */ NdrFcLong( 0x13 ),  /* 19 */
/* 210 */ NdrFcShort( 0x8008 ),         /* Simple arm
type: FC_LONG */
/* 212 */ NdrFcLong( 0x16 ),  /* 22 */
/* 216 */ NdrFcShort( 0x8008 ),         /* Simple arm
type: FC_LONG */
/* 218 */ NdrFcLong( 0x17 ),  /* 23 */
/* 222 */ NdrFcShort( 0x8008 ),         /* Simple arm
type: FC_LONG */
/* 224 */ NdrFcLong( 0xe ),   /* 14 */
/* 228 */ NdrFcShort( 0x2aa ),          /* Offset=
682 (910) */
/* 230 */ NdrFcLong( 0x400e ),          /* 16398 */
/* 234 */ NdrFcShort( 0x2b0 ),          /* Offset=
688 (922) */
/* 236 */ NdrFcLong( 0x4010 ),          /* 16400 */
/* 240 */ NdrFcShort( 0x2ae ),          /* Offset=
686 (926) */
/* 242 */ NdrFcLong( 0x4012 ),          /* 16402 */
/* 246 */ NdrFcShort( 0x26c ),          /* Offset=
620 (866) */
/* 248 */ NdrFcLong( 0x4013 ),          /* 16403 */
/* 252 */ NdrFcShort( 0x26a ),          /* Offset=
618 (870) */
/* 254 */ NdrFcLong( 0x4016 ),          /* 16406 */
/* 258 */ NdrFcShort( 0x264 ),          /* Offset=
612 (870) */
/* 260 */ NdrFcLong( 0x4017 ),          /* 16407 */
/* 264 */ NdrFcShort( 0x25e ),          /* Offset=
606 (870) */
/* 266 */ NdrFcLong( 0x0 ),   /* 0 */
/* 270 */ NdrFcShort( 0x0 ),  /* Offset= 0 (270) */
/* 272 */ NdrFcLong( 0x1 ),   /* 1 */
/* 276 */ NdrFcShort( 0x0 ),  /* Offset= 0 (276) */
/* 278 */ NdrFcShort( 0xffffffff ),     /* Offset= -1
(277) */
/* 280 */
                                0x15,               /*
FC_STRUCT */
                                0x7,                /*
7 */
/* 282 */ NdrFcShort( 0x8 ),  /* 8 */
/* 284 */ 0xb,                /* FC_HYPER */
                                0x5b,               /*
FC_END */
/* 286 */
                                0x12, 0x0,          /*
FC_UP */
/* 288 */ NdrFcShort( 0xe ),  /* Offset= 14 (302) */
/* 290 */
                                0x1b,               /*
FC_CARRAY */
                                0x1,                /*
1 */
/* 292 */ NdrFcShort( 0x2 ),  /* 2 */
/* 294 */ 0x9,                /* Corr desc: FC_ULONG
*/
                                0x0,                /*
*/
/* 296 */ NdrFcShort( 0xfffc ),         /* -4 */
/* 298 */ NdrFcShort( 0x1 ),  /* Corr flags:  early,
*/
/* 300 */ 0x6,                /* FC_SHORT */
                                0x5b,               /*
FC_END */
/* 302 */
                                0x17,               /*
FC_CSTRUCT */
```


©2005 Hewlett-Packard Company. All rights reserved.

```
                                0x3,                /*
3 */
/* 304 */ NdrFcShort( 0x8 ),  /* 8 */
/* 306 */ NdrFcShort( 0xfffffff0 ),     /* Offset= -
16 (290) */
/* 308 */ 0x8,                /* FC_LONG */
                                0x8,                /*
FC_LONG */
/* 310 */ 0x5c,               /* FC_PAD */
                                0x5b,               /*
FC_END */
/* 312 */
                                0x2f,               /*
FC_IP */
                                0x5a,               /*
FC_CONSTANT_IID */
/* 314 */ NdrFcLong( 0x0 ),   /* 0 */
/* 318 */ NdrFcShort( 0x0 ),  /* 0 */
/* 320 */ NdrFcShort( 0x0 ),  /* 0 */
/* 322 */ 0xc0,               /* 192 */
                                0x0,                /*
0 */
/* 324 */ 0x0,                /* 0 */
                                0x0,                /*
0 */
/* 326 */ 0x0,                /* 0 */
                                0x0,                /*
0 */
/* 328 */ 0x0,                /* 0 */
                                0x46,               /*
70 */
/* 330 */
                                0x2f,               /*
FC_IP */
                                0x5a,               /*
FC_CONSTANT_IID */
/* 332 */ NdrFcLong( 0x20400 ),         /* 132096 */
/* 336 */ NdrFcShort( 0x0 ),  /* 0 */
/* 338 */ NdrFcShort( 0x0 ),  /* 0 */
/* 340 */ 0xc0,               /* 192 */
                                0x0,                /*
0 */
/* 342 */ 0x0,                /* 0 */
                                0x0,                /*
0 */
/* 344 */ 0x0,                /* 0 */
                                0x0,                /*
0 */
/* 346 */ 0x0,                /* 0 */
                                0x46,               /*
70 */
/* 348 */
                                0x12, 0x10,         /*
FC_UP [pointer_deref] */
/* 350 */ NdrFcShort( 0x2 ),  /* Offset= 2 (352) */
/* 352 */
                                0x12, 0x0,          /*
FC_UP */
/* 354 */ NdrFcShort( 0x1e6 ),          /* Offset=
486 (840) */
/* 356 */
                                0x2a,               /*
FC_ENCAPSULATED_UNION */
                                0x89,               /*
137 */
/* 358 */ NdrFcShort( 0x20 ), /* 32 */
/* 360 */ NdrFcShort( 0xa ),  /* 10 */
/* 362 */ NdrFcLong( 0x8 ),   /* 8 */
/* 366 */ NdrFcShort( 0x50 ), /* Offset= 80 (446) */
/* 368 */ NdrFcLong( 0xd ),   /* 13 */
/* 372 */ NdrFcShort( 0x70 ), /* Offset= 112 (484) */
/* 374 */ NdrFcLong( 0x9 ),   /* 9 */
/* 378 */ NdrFcShort( 0x90 ), /* Offset= 144 (522) */
/* 380 */ NdrFcLong( 0xc ),   /* 12 */
/* 384 */ NdrFcShort( 0xb0 ), /* Offset= 176 (560) */
/* 386 */ NdrFcLong( 0x24 ),  /* 36 */
/* 390 */ NdrFcShort( 0x104 ),          /* Offset=
260 (650) */
/* 392 */ NdrFcLong( 0x800d ),          /* 32781 */
/* 396 */ NdrFcShort( 0x120 ),          /* Offset=
288 (684) */
/* 398 */ NdrFcLong( 0x10 ),  /* 16 */
/* 402 */ NdrFcShort( 0x13a ),          /* Offset=
314 (716) */
/* 404 */ NdrFcLong( 0x2 ),   /* 2 */
/* 408 */ NdrFcShort( 0x150 ),          /* Offset=
336 (744) */
/* 410 */ NdrFcLong( 0x3 ),   /* 3 */
/* 414 */ NdrFcShort( 0x166 ),          /* Offset=
358 (772) */
/* 416 */ NdrFcLong( 0x14 ),  /* 20 */
/* 420 */ NdrFcShort( 0x17c ),          /* Offset=
380 (800) */
/* 422 */ NdrFcShort( 0xffffffff ),     /* Offset= -1
(421) */
/* 424 */
                                0x21,               /*
FC_BOGUS_ARRAY */
                                0x3,                /*
3 */
/* 426 */ NdrFcShort( 0x0 ),  /* 0 */
/* 428 */ 0x19,               /* Corr desc:  field
pointer, FC_ULONG */
                                0x0,                /*
*/
/* 430 */ NdrFcShort( 0x0 ),  /* 0 */
/* 432 */ NdrFcShort( 0x1 ),  /* Corr flags:  early,
*/
/* 434 */ NdrFcLong( 0xffffffff ),      /* -1 */
/* 438 */ NdrFcShort( 0x0 ),  /* Corr flags:  */
/* 440 */
                                0x12, 0x0,          /*
FC_UP */
/* 442 */ NdrFcShort( 0xffffff74 ),     /* Offset= -
140 (302) */
/* 444 */ 0x5c,               /* FC_PAD */
                                0x5b,               /*
FC_END */
/* 446 */
                                0x1a,               /*
FC_BOGUS_STRUCT */
                                0x3,                /*
3 */
/* 448 */ NdrFcShort( 0x10 ), /* 16 */
/* 450 */ NdrFcShort( 0x0 ),  /* 0 */
/* 452 */ NdrFcShort( 0x6 ),  /* Offset= 6 (458) */
/* 454 */ 0x8,                /* FC_LONG */
                                0x39,               /*
FC_ALIGNM8 */
/* 456 */ 0x36,               /* FC_POINTER */
                                0x5b,               /*
FC_END */
/* 458 */
                                0x11, 0x0,          /*
FC_RP */
/* 460 */ NdrFcShort( 0xffffffdc ),     /* Offset= -
36 (424) */
/* 462 */
                                0x21,               /*
FC_BOGUS_ARRAY */
                                0x3,                /*
3 */
/* 464 */ NdrFcShort( 0x0 ),  /* 0 */
/* 466 */ 0x19,               /* Corr desc:  field
pointer, FC_ULONG */
                                0x0,                /*
*/
/* 468 */ NdrFcShort( 0x0 ),  /* 0 */
/* 470 */ NdrFcShort( 0x1 ),  /* Corr flags:  early,
*/
/* 472 */ NdrFcLong( 0xffffffff ),      /* -1 */
/* 476 */ NdrFcShort( 0x0 ),  /* Corr flags:  */
/* 478 */ 0x4c,               /* FC_EMBEDDED_COMPLEX
*/
                                0x0,                /*
0 */
/* 480 */ NdrFcShort( 0xffffff58 ),     /* Offset= -
168 (312) */
/* 482 */ 0x5c,               /* FC_PAD */
                                0x5b,               /*
FC_END */
/* 484 */
                                0x1a,               /*
FC_BOGUS_STRUCT */
                                0x3,                /*
3 */
/* 486 */ NdrFcShort( 0x10 ), /* 16 */
/* 488 */ NdrFcShort( 0x0 ),  /* 0 */
/* 490 */ NdrFcShort( 0x6 ),  /* Offset= 6 (496) */
/* 492 */ 0x8,                /* FC_LONG */
                                0x39,               /*
FC_ALIGNM8 */
/* 494 */ 0x36,               /* FC_POINTER */
                                0x5b,               /*
FC_END */
/* 496 */
                                0x11, 0x0,          /*
FC_RP */
/* 498 */ NdrFcShort( 0xffffffdc ),     /* Offset= -
36 (462) */
/* 500 */
                                0x21,               /*
FC_BOGUS_ARRAY */
                                0x3,                /*
3 */
/* 502 */ NdrFcShort( 0x0 ),  /* 0 */
/* 504 */ 0x19,               /* Corr desc:  field
pointer, FC_ULONG */
```


©2005 Hewlett-Packard Company. All rights reserved.

```
                                0x0,                /*
*/
/* 506 */ NdrFcShort( 0x0 ),  /* 0 */
/* 508 */ NdrFcShort( 0x1 ),  /* Corr flags:  early,
*/
/* 510 */ NdrFcLong( 0xffffffff ),      /* -1 */
/* 514 */ NdrFcShort( 0x0 ),  /* Corr flags:  */
/* 516 */ 0x4c,               /* FC_EMBEDDED_COMPLEX
*/
                                0x0,                /*
0 */
/* 518 */ NdrFcShort( 0xffffff44 ),     /* Offset= -
188 (330) */
/* 520 */ 0x5c,               /* FC_PAD */
                                0x5b,               /*
FC_END */
/* 522 */
                                0x1a,               /*
FC_BOGUS_STRUCT */
                                0x3,                /*
3 */
/* 524 */ NdrFcShort( 0x10 ), /* 16 */
/* 526 */ NdrFcShort( 0x0 ),  /* 0 */
/* 528 */ NdrFcShort( 0x6 ),  /* Offset= 6 (534) */
/* 530 */ 0x8,                /* FC_LONG */
                                0x39,               /*
FC_ALIGNM8 */
/* 532 */ 0x36,               /* FC_POINTER */
                                0x5b,               /*
FC_END */
/* 534 */
                                0x11, 0x0,          /*
FC_RP */
/* 536 */ NdrFcShort( 0xffffffdc ),     /* Offset= -
36 (500) */
/* 538 */
                                0x21,               /*
FC_BOGUS_ARRAY */
                                0x3,                /*
3 */
/* 540 */ NdrFcShort( 0x0 ),  /* 0 */
/* 542 */ 0x19,               /* Corr desc:  field
pointer, FC_ULONG */
                                0x0,                /*
*/
/* 544 */ NdrFcShort( 0x0 ),  /* 0 */
/* 546 */ NdrFcShort( 0x1 ),  /* Corr flags:  early,
*/
/* 548 */ NdrFcLong( 0xffffffff ),      /* -1 */
/* 552 */ NdrFcShort( 0x0 ),  /* Corr flags:  */
/* 554 */
                                0x12, 0x0,          /*
FC_UP */
/* 556 */ NdrFcShort( 0x176 ),          /* Offset=
374 (930) */
/* 558 */ 0x5c,               /* FC_PAD */
                                0x5b,               /*
FC_END */
/* 560 */
                                0x1a,               /*
FC_BOGUS_STRUCT */
                                0x3,                /*
3 */
/* 562 */ NdrFcShort( 0x10 ), /* 16 */
/* 564 */ NdrFcShort( 0x0 ),  /* 0 */
/* 566 */ NdrFcShort( 0x6 ),  /* Offset= 6 (572) */
/* 568 */ 0x8,                /* FC_LONG */
                                0x39,               /*
FC_ALIGNM8 */
/* 570 */ 0x36,               /* FC_POINTER */
                                0x5b,               /*
FC_END */
/* 572 */
                                0x11, 0x0,          /*
FC_RP */
/* 574 */ NdrFcShort( 0xffffffdc ),     /* Offset= -
36 (538) */
/* 576 */
                                0x2f,               /*
FC_IP */
                                0x5a,               /*
FC_CONSTANT_IID */
/* 578 */ NdrFcLong( 0x2f ),  /* 47 */
/* 582 */ NdrFcShort( 0x0 ),  /* 0 */
/* 584 */ NdrFcShort( 0x0 ),  /* 0 */
/* 586 */ 0xc0,               /* 192 */
                                0x0,                /*
0 */
/* 588 */ 0x0,                /* 0 */
                                0x0,                /*
0 */
/* 590 */ 0x0,                /* 0 */
                                0x0,                /*
0 */
/* 592 */ 0x0,                /* 0 */
                                0x46,               /*
70 */
/* 594 */
                                0x1b,               /*
FC_CARRAY */
                                0x0,                /*
0 */
/* 596 */ NdrFcShort( 0x1 ),  /* 1 */
/* 598 */ 0x19,               /* Corr desc:  field
pointer, FC_ULONG */
                                0x0,                /*
*/
/* 600 */ NdrFcShort( 0x4 ),  /* 4 */
/* 602 */ NdrFcShort( 0x1 ),  /* Corr flags:  early,
*/
/* 604 */ 0x1,                /* FC_BYTE */
                                0x5b,               /*
FC_END */
/* 606 */
                                0x1a,               /*
FC_BOGUS_STRUCT */
                                0x3,                /*
3 */
/* 608 */ NdrFcShort( 0x18 ), /* 24 */
/* 610 */ NdrFcShort( 0x0 ),  /* 0 */
/* 612 */ NdrFcShort( 0xc ),  /* Offset= 12 (624) */
/* 614 */ 0x8,                /* FC_LONG */
                                0x8,                /*
FC_LONG */
/* 616 */ 0x4c,               /* FC_EMBEDDED_COMPLEX
*/
                                0x0,                /*
0 */
/* 618 */ NdrFcShort( 0xffffffd6 ),     /* Offset= -
42 (576) */
/* 620 */ 0x39,               /* FC_ALIGNM8 */
                                0x36,               /*
FC_POINTER */
/* 622 */ 0x5c,               /* FC_PAD */
                                0x5b,               /*
FC_END */
/* 624 */
                                0x12, 0x0,          /*
FC_UP */
/* 626 */ NdrFcShort( 0xffffffe0 ),     /* Offset= -
32 (594) */
/* 628 */
                                0x21,               /*
FC_BOGUS_ARRAY */
                                0x3,                /*
3 */
/* 630 */ NdrFcShort( 0x0 ),  /* 0 */
/* 632 */ 0x19,               /* Corr desc:  field
pointer, FC_ULONG */
                                0x0,                /*
*/
/* 634 */ NdrFcShort( 0x0 ),  /* 0 */
/* 636 */ NdrFcShort( 0x1 ),  /* Corr flags:  early,
*/
/* 638 */ NdrFcLong( 0xffffffff ),      /* -1 */
/* 642 */ NdrFcShort( 0x0 ),  /* Corr flags:  */
/* 644 */
                                0x12, 0x0,          /*
FC_UP */
/* 646 */ NdrFcShort( 0xffffffd8 ),     /* Offset= -
40 (606) */
/* 648 */ 0x5c,               /* FC_PAD */
                                0x5b,               /*
FC_END */
/* 650 */
                                0x1a,               /*
FC_BOGUS_STRUCT */
                                0x3,                /*
3 */
/* 652 */ NdrFcShort( 0x10 ), /* 16 */
/* 654 */ NdrFcShort( 0x0 ),  /* 0 */
/* 656 */ NdrFcShort( 0x6 ),  /* Offset= 6 (662) */
/* 658 */ 0x8,                /* FC_LONG */
                                0x39,               /*
FC_ALIGNM8 */
/* 660 */ 0x36,               /* FC_POINTER */
                                0x5b,               /*
FC_END */
/* 662 */
                                0x11, 0x0,          /*
FC_RP */
/* 664 */ NdrFcShort( 0xffffffdc ),     /* Offset= -
36 (628) */
/* 666 */
                                0x1d,               /*
FC_SMFARRAY */
                                0x0,                /*
0 */
/* 668 */ NdrFcShort( 0x8 ),  /* 8 */
```


©2005 Hewlett-Packard Company. All rights reserved.

```
/* 670 */ 0x1,                  /* FC_BYTE */
                                0x5b,               /*
FC_END */
/* 672 */
                                0x15,               /*
FC_STRUCT */
                                0x3,                /*
3 */
/* 674 */ NdrFcShort( 0x10 ), /* 16 */
/* 676 */ 0x8,                  /* FC_LONG */
                                0x6,                /*
FC_SHORT */
/* 678 */ 0x6,                  /* FC_SHORT */
                                0x4c,               /*
FC_EMBEDDED_COMPLEX */
/* 680 */ 0x0,                  /* 0 */
                                NdrFcShort( 0xfffffff1
),        /* Offset= -15 (666) */
                                0x5b,               /*
FC_END */
/* 684 */
                                0x1a,               /*
FC_BOGUS_STRUCT */
                                0x3,                /*
3 */
/* 686 */ NdrFcShort( 0x20 ), /* 32 */
/* 688 */ NdrFcShort( 0x0 ),  /* 0 */
/* 690 */ NdrFcShort( 0xa ),  /* Offset= 10 (700) */
/* 692 */ 0x8,                  /* FC_LONG */
                                0x39,               /*
FC_ALIGNM8 */
/* 694 */ 0x36,                 /* FC_POINTER */
                                0x4c,               /*
FC_EMBEDDED_COMPLEX */
/* 696 */ 0x0,                  /* 0 */
                                NdrFcShort( 0xffffffe7
),        /* Offset= -25 (672) */
                                0x5b,               /*
FC_END */
/* 700 */
                                0x11, 0x0,          /*
FC_RP */
/* 702 */ NdrFcShort( 0xffffff10 ),     /* Offset= -
240 (462) */
/* 704 */
                                0x1b,               /*
FC_CARRAY */
                                0x0,                /*
0 */
/* 706 */ NdrFcShort( 0x1 ),  /* 1 */
/* 708 */ 0x19,                 /* Corr desc:  field
pointer, FC_ULONG */
                                0x0,                /*
*/
/* 710 */ NdrFcShort( 0x0 ),  /* 0 */
/* 712 */ NdrFcShort( 0x1 ),  /* Corr flags:  early,
*/
/* 714 */ 0x1,                  /* FC_BYTE */
                                0x5b,               /*
FC_END */
/* 716 */
                                0x1a,               /*
FC_BOGUS_STRUCT */
                                0x3,                /*
3 */
/* 718 */ NdrFcShort( 0x10 ), /* 16 */
/* 720 */ NdrFcShort( 0x0 ),  /* 0 */
/* 722 */ NdrFcShort( 0x6 ),  /* Offset= 6 (728) */
/* 724 */ 0x8,                  /* FC_LONG */
                                0x39,               /*
FC_ALIGNM8 */
/* 726 */ 0x36,                 /* FC_POINTER */
                                0x5b,               /*
FC_END */
/* 728 */
                                0x12, 0x0,          /*
FC_UP */
/* 730 */ NdrFcShort( 0xffffffe6 ),     /* Offset= -
26 (704) */
/* 732 */
                                0x1b,               /*
FC_CARRAY */
                                0x1,                /*
1 */
/* 734 */ NdrFcShort( 0x2 ),  /* 2 */
/* 736 */ 0x19,                 /* Corr desc:  field
pointer, FC_ULONG */
                                0x0,                /*
*/
/* 738 */ NdrFcShort( 0x0 ),  /* 0 */
/* 740 */ NdrFcShort( 0x1 ),  /* Corr flags:  early,
*/
/* 742 */ 0x6,                  /* FC_SHORT */
                                0x5b,               /*
FC_END */
/* 744 */
                                0x1a,               /*
FC_BOGUS_STRUCT */
                                0x3,                /*
3 */
/* 746 */ NdrFcShort( 0x10 ), /* 16 */
/* 748 */ NdrFcShort( 0x0 ),  /* 0 */
/* 750 */ NdrFcShort( 0x6 ),  /* Offset= 6 (756) */
/* 752 */ 0x8,                  /* FC_LONG */
                                0x39,               /*
FC_ALIGNM8 */
/* 754 */ 0x36,                 /* FC_POINTER */
                                0x5b,               /*
FC_END */
/* 756 */
                                0x12, 0x0,          /*
FC_UP */
/* 758 */ NdrFcShort( 0xffffffe6 ),     /* Offset= -
26 (732) */
/* 760 */
                                0x1b,               /*
FC_CARRAY */
                                0x3,                /*
3 */
/* 762 */ NdrFcShort( 0x4 ),  /* 4 */
/* 764 */ 0x19,                 /* Corr desc:  field
pointer, FC_ULONG */
                                0x0,                /*
*/
/* 766 */ NdrFcShort( 0x0 ),  /* 0 */
/* 768 */ NdrFcShort( 0x1 ),  /* Corr flags:  early,
*/
/* 770 */ 0x8,                  /* FC_LONG */
                                0x5b,               /*
FC_END */
/* 772 */
                                0x1a,               /*
FC_BOGUS_STRUCT */
                                0x3,                /*
3 */
/* 774 */ NdrFcShort( 0x10 ), /* 16 */
/* 776 */ NdrFcShort( 0x0 ),  /* 0 */
/* 778 */ NdrFcShort( 0x6 ),  /* Offset= 6 (784) */
/* 780 */ 0x8,                  /* FC_LONG */
                                0x39,               /*
FC_ALIGNM8 */
/* 782 */ 0x36,                 /* FC_POINTER */
                                0x5b,               /*
FC_END */
/* 784 */
                                0x12, 0x0,          /*
FC_UP */
/* 786 */ NdrFcShort( 0xffffffe6 ),     /* Offset= -
26 (760) */
/* 788 */
                                0x1b,               /*
FC_CARRAY */
                                0x7,                /*
7 */
/* 790 */ NdrFcShort( 0x8 ),  /* 8 */
/* 792 */ 0x19,                 /* Corr desc:  field
pointer, FC_ULONG */
                                0x0,                /*
*/
/* 794 */ NdrFcShort( 0x0 ),  /* 0 */
/* 796 */ NdrFcShort( 0x1 ),  /* Corr flags:  early,
*/
/* 798 */ 0xb,                  /* FC_HYPER */
                                0x5b,               /*
FC_END */
/* 800 */
                                0x1a,               /*
FC_BOGUS_STRUCT */
                                0x3,                /*
3 */
/* 802 */ NdrFcShort( 0x10 ), /* 16 */
/* 804 */ NdrFcShort( 0x0 ),  /* 0 */
/* 806 */ NdrFcShort( 0x6 ),  /* Offset= 6 (812) */
/* 808 */ 0x8,                  /* FC_LONG */
                                0x39,               /*
FC_ALIGNM8 */
/* 810 */ 0x36,                 /* FC_POINTER */
                                0x5b,               /*
FC_END */
/* 812 */
                                0x12, 0x0,          /*
FC_UP */
/* 814 */ NdrFcShort( 0xffffffe6 ),     /* Offset= -
26 (788) */
/* 816 */
                                0x15,               /*
FC_STRUCT */
```


©2005 Hewlett-Packard Company. All rights reserved.

```
                                0x3,                /*
3 */
/* 818 */ NdrFcShort( 0x8 ),  /* 8 */
/* 820 */ 0x8,                /* FC_LONG */
                                0x8,                /*
FC_LONG */
/* 822 */ 0x5c,               /* FC_PAD */
                                0x5b,               /*
FC_END */
/* 824 */
                                0x1b,               /*
FC_CARRAY */
                                0x3,                /*
3 */
/* 826 */ NdrFcShort( 0x8 ),  /* 8 */
/* 828 */ 0x7,                /* Corr desc: FC_USHORT
*/
                                0x0,                /*
*/
/* 830 */ NdrFcShort( 0xffc8 ),         /* -56 */
/* 832 */ NdrFcShort( 0x1 ),  /* Corr flags:  early,
*/
/* 834 */ 0x4c,               /* FC_EMBEDDED_COMPLEX
*/
                                0x0,                /*
0 */
/* 836 */ NdrFcShort( 0xffffffec ),     /* Offset= -
20 (816) */
/* 838 */ 0x5c,               /* FC_PAD */
                                0x5b,               /*
FC_END */
/* 840 */
                                0x1a,               /*
FC_BOGUS_STRUCT */
                                0x3,                /*
3 */
/* 842 */ NdrFcShort( 0x38 ), /* 56 */
/* 844 */ NdrFcShort( 0xffffffec ),     /* Offset= -
20 (824) */
/* 846 */ NdrFcShort( 0x0 ),  /* Offset= 0 (846) */
/* 848 */ 0x6,                /* FC_SHORT */
                                0x6,                /*
FC_SHORT */
/* 850 */ 0x38,               /* FC_ALIGNM4 */
                                0x8,                /*
FC_LONG */
/* 852 */ 0x8,                /* FC_LONG */
                                0x4c,               /*
FC_EMBEDDED_COMPLEX */
/* 854 */ 0x4,                /* 4 */
                                NdrFcShort( 0xfffffe0d
),        /* Offset= -499 (356) */
                                0x5b,               /*
FC_END */
/* 858 */
                                0x12, 0x0,          /*
FC_UP */
/* 860 */ NdrFcShort( 0xffffff02 ),     /* Offset= -
254 (606) */
/* 862 */
                                0x12, 0x8,          /*
FC_UP [simple_pointer] */
/* 864 */ 0x1,                /* FC_BYTE */
                                0x5c,               /*
FC_PAD */
/* 866 */
                                0x12, 0x8,          /*
FC_UP [simple_pointer] */
/* 868 */ 0x6,                /* FC_SHORT */
                                0x5c,               /*
FC_PAD */
/* 870 */
                                0x12, 0x8,          /*
FC_UP [simple_pointer] */
/* 872 */ 0x8,                /* FC_LONG */
                                0x5c,               /*
FC_PAD */
/* 874 */
                                0x12, 0x8,          /*
FC_UP [simple_pointer] */
/* 876 */ 0xa,                /* FC_FLOAT */
                                0x5c,               /*
FC_PAD */
/* 878 */
                                0x12, 0x8,          /*
FC_UP [simple_pointer] */
/* 880 */ 0xc,                /* FC_DOUBLE */
                                0x5c,               /*
FC_PAD */
/* 882 */
                                0x12, 0x0,          /*
FC_UP */
/* 884 */ NdrFcShort( 0xfffffda4 ),     /* Offset= -
604 (280) */
/* 886 */
                                0x12, 0x10,         /*
FC_UP [pointer_deref] */
/* 888 */ NdrFcShort( 0xfffffda6 ),     /* Offset= -
602 (286) */
/* 890 */
                                0x12, 0x10,         /*
FC_UP [pointer_deref] */
/* 892 */ NdrFcShort( 0xfffffdbc ),     /* Offset= -
580 (312) */
/* 894 */
                                0x12, 0x10,         /*
FC_UP [pointer_deref] */
/* 896 */ NdrFcShort( 0xfffffdca ),     /* Offset= -
566 (330) */
/* 898 */
                                0x12, 0x10,         /*
FC_UP [pointer_deref] */
/* 900 */ NdrFcShort( 0xfffffdd8 ),     /* Offset= -
552 (348) */
/* 902 */
                                0x12, 0x10,         /*
FC_UP [pointer_deref] */
/* 904 */ NdrFcShort( 0x2 ),  /* Offset= 2 (906) */
/* 906 */
                                0x12, 0x0,          /*
FC_UP */
/* 908 */ NdrFcShort( 0x16 ), /* Offset= 22 (930) */
/* 910 */
                                0x15,               /*
FC_STRUCT */
                                0x7,                /*
7 */
/* 912 */ NdrFcShort( 0x10 ), /* 16 */
/* 914 */ 0x6,                /* FC_SHORT */
                                0x1,                /*
FC_BYTE */
/* 916 */ 0x1,                /* FC_BYTE */
                                0x38,               /*
FC_ALIGNM4 */
/* 918 */ 0x8,                /* FC_LONG */
                                0x39,               /*
FC_ALIGNM8 */
/* 920 */ 0xb,                /* FC_HYPER */
                                0x5b,               /*
FC_END */
/* 922 */
                                0x12, 0x0,          /*
FC_UP */
/* 924 */ NdrFcShort( 0xfffffff2 ),     /* Offset= -
14 (910) */
/* 926 */
                                0x12, 0x8,          /*
FC_UP [simple_pointer] */
/* 928 */ 0x2,                /* FC_CHAR */
                                0x5c,               /*
FC_PAD */
/* 930 */
                                0x1a,               /*
FC_BOGUS_STRUCT */
                                0x7,                /*
7 */
/* 932 */ NdrFcShort( 0x20 ), /* 32 */
/* 934 */ NdrFcShort( 0x0 ),  /* 0 */
/* 936 */ NdrFcShort( 0x0 ),  /* Offset= 0 (936) */
/* 938 */ 0x8,                /* FC_LONG */
                                0x8,                /*
FC_LONG */
/* 940 */ 0x6,                /* FC_SHORT */
                                0x6,                /*
FC_SHORT */
/* 942 */ 0x6,                /* FC_SHORT */
                                0x6,                /*
FC_SHORT */
/* 944 */ 0x4c,               /* FC_EMBEDDED_COMPLEX
*/
                                0x0,                /*
0 */
/* 946 */ NdrFcShort( 0xfffffc54 ),     /* Offset= -
940 (6) */
/* 948 */ 0x5c,               /* FC_PAD */
                                0x5b,               /*
FC_END */
/* 950 */ 0xb4,               /* FC_USER_MARSHAL */
                                0x83,               /*
131 */
/* 952 */ NdrFcShort( 0x0 ),  /* 0 */
/* 954 */ NdrFcShort( 0x18 ), /* 24 */
/* 956 */ NdrFcShort( 0x0 ),  /* 0 */
/* 958 */ NdrFcShort( 0xfffffc44 ),     /* Offset= -
956 (2) */
/* 960 */
                                0x11, 0x4,          /*
FC_RP [alloced_on_stack] */
```


©2005 Hewlett-Packard Company. All rights reserved.

```
/* 962 */ NdrFcShort( 0x6 ),  /* Offset= 6 (968) */
/* 964 */
                               0x13, 0x0,          /*
FC_OP */
/* 966 */ NdrFcShort( 0xffffffdc ),     /* Offset= -
36 (930) */
/* 968 */ 0xb4,                /* FC_USER_MARSHAL */
                               0x83,               /*
131 */
/* 970 */ NdrFcShort( 0x0 ),  /* 0 */
/* 972 */ NdrFcShort( 0x18 ), /* 24 */
/* 974 */ NdrFcShort( 0x0 ),  /* 0 */
/* 976 */ NdrFcShort( 0xfffffff4 ),     /* Offset= -
12 (964) */

                               0x0
        }
    };

const CInterfaceProxyVtbl *
_tpcc_com_ps_ProxyVtblList[] =
{
    ( CInterfaceProxyVtbl *) &_ITPCCProxyVtbl,
    0
};

const CInterfaceStubVtbl *
_tpcc_com_ps_StubVtblList[] =
{
    ( CInterfaceStubVtbl *) &_ITPCCStubVtbl,
    0
};

PCInterfaceName const
_tpcc_com_ps_InterfaceNamesList[] =
{
    "ITPCC",
    0
};


#define _tpcc_com_ps_CHECK_IID(n)
          IID_GENERIC_CHECK_IID( _tpcc_com_ps, pIID,
n)

int __stdcall _tpcc_com_ps_IID_Lookup( const IID *
pIID, int * pIndex )
{

    if(!_tpcc_com_ps_CHECK_IID(0))
        {
        *pIndex = 0;
        return 1;
        }

    return 0;
}

const ExtendedProxyFileInfo tpcc_com_ps_ProxyFileInfo
=
{
    (PCInterfaceProxyVtblList *) &
_tpcc_com_ps_ProxyVtblList,
    (PCInterfaceStubVtblList *) &
_tpcc_com_ps_StubVtblList,
    (const PCInterfaceName * ) &
_tpcc_com_ps_InterfaceNamesList,
    0, // no delegation
    & _tpcc_com_ps_IID_Lookup,
    1,
    2,
    0, /* table of [async_uuid] interfaces */
    0, /* Filler1 */
    0, /* Filler2 */
    0  /* Filler3 */
};


#endif /* defined(_M_IA64) || defined(_M_AXP64)*/
```

tpcc_com_ps.h

```
#pragma warning( disable: 4049 )  /* more than 64k
source lines */

/* this ALWAYS GENERATED file contains the
definitions for the interfaces */


 /* File created by MIDL compiler version 5.03.0280
*/
/* at Thu Dec 13 23:13:08 2001
 */
/* Compiler settings for .\src\tpcc_com_ps.idl:
    Oicf (OptLev=i2), W1, Zp8, env=Win32 (32b run),
ms_ext, c_ext
    error checks: allocation ref bounds_check enum
stub_data
    VC __declspec() decoration level:
         __declspec(uuid()), __declspec(selectany),
__declspec(novtable)
         DECLSPEC_UUID(), MIDL_INTERFACE()
*/
//@@MIDL_FILE_HEADING(  )


/* verify that the <rpcndr.h> version is high enough
to compile this file*/
#ifndef __REQUIRED_RPCNDR_H_VERSION__
#define __REQUIRED_RPCNDR_H_VERSION__ 440
#endif

#include "rpc.h"
#include "rpcndr.h"

#ifndef __RPCNDR_H_VERSION__
#error this stub requires an updated version of
<rpcndr.h>
#endif // __RPCNDR_H_VERSION__

#ifndef COM_NO_WINDOWS_H
#include "windows.h"
#include "ole2.h"
#endif /*COM_NO_WINDOWS_H*/

#ifndef __tpcc_com_ps_h__
#define __tpcc_com_ps_h__

/* Forward Declarations */

#ifndef __ITPCC_FWD_DEFINED__
#define __ITPCC_FWD_DEFINED__
typedef interface ITPCC ITPCC;
#endif    /* __ITPCC_FWD_DEFINED__ */


/* header files for imported files */
#include "oaidl.h"
#include "ocidl.h"

#ifdef __cplusplus
extern "C"{
#endif

void __RPC_FAR * __RPC_USER
MIDL_user_allocate(size_t);
void __RPC_USER MIDL_user_free( void __RPC_FAR * );

/* interface __MIDL_itf_tpcc_com_ps_0000 */
/* [local] */




extern RPC_IF_HANDLE
__MIDL_itf_tpcc_com_ps_0000_v0_0_c_ifspec;
extern RPC_IF_HANDLE
__MIDL_itf_tpcc_com_ps_0000_v0_0_s_ifspec;

#ifndef __ITPCC_INTERFACE_DEFINED__
#define __ITPCC_INTERFACE_DEFINED__

/* interface ITPCC */
/* [unique][helpstring][uuid][oleautomation][object]
*/


EXTERN_C const IID IID_ITPCC;

#if defined(__cplusplus) && !defined(CINTERFACE)

    MIDL_INTERFACE("FEEE6AA2-84B1-11d2-BA47-
00C04FBFE08B")
    ITPCC : public IUnknown
    {
    public:
        virtual HRESULT __stdcall NewOrder(
            /* [in] */ VARIANT txn_in,
            /* [out] */ VARIANT __RPC_FAR *txn_out) =
0;

        virtual HRESULT __stdcall Payment(
            /* [in] */ VARIANT txn_in,
```


©2005 Hewlett-Packard Company. All rights reserved.

```
            /* [out] */ VARIANT __RPC_FAR *txn_out) =
0;

        virtual HRESULT __stdcall Delivery(
            /* [in] */ VARIANT txn_in,
            /* [out] */ VARIANT __RPC_FAR *txn_out) =
0;

        virtual HRESULT __stdcall StockLevel(
            /* [in] */ VARIANT txn_in,
            /* [out] */ VARIANT __RPC_FAR *txn_out) =
0;

        virtual HRESULT __stdcall OrderStatus(
            /* [in] */ VARIANT txn_in,
            /* [out] */ VARIANT __RPC_FAR *txn_out) =
0;

        virtual HRESULT __stdcall CallSetComplete(
void) = 0;

    };

#else     /* C style interface */

    typedef struct ITPCCVtbl
    {
        BEGIN_INTERFACE

        HRESULT ( STDMETHODCALLTYPE __RPC_FAR
*QueryInterface )(
            ITPCC __RPC_FAR * This,
            /* [in] */ REFIID riid,
            /* [iid_is][out] */ void __RPC_FAR
*__RPC_FAR *ppvObject);

        ULONG ( STDMETHODCALLTYPE __RPC_FAR *AddRef
)(
            ITPCC __RPC_FAR * This);

        ULONG ( STDMETHODCALLTYPE __RPC_FAR *Release
)(
            ITPCC __RPC_FAR * This);

        HRESULT ( __stdcall __RPC_FAR *NewOrder )(
            ITPCC __RPC_FAR * This,
            /* [in] */ VARIANT txn_in,
            /* [out] */ VARIANT __RPC_FAR *txn_out);

        HRESULT ( __stdcall __RPC_FAR *Payment )(
            ITPCC __RPC_FAR * This,
            /* [in] */ VARIANT txn_in,
            /* [out] */ VARIANT __RPC_FAR *txn_out);

        HRESULT ( __stdcall __RPC_FAR *Delivery )(
            ITPCC __RPC_FAR * This,
            /* [in] */ VARIANT txn_in,
            /* [out] */ VARIANT __RPC_FAR *txn_out);

        HRESULT ( __stdcall __RPC_FAR *StockLevel )(
            ITPCC __RPC_FAR * This,
            /* [in] */ VARIANT txn_in,
            /* [out] */ VARIANT __RPC_FAR *txn_out);

        HRESULT ( __stdcall __RPC_FAR *OrderStatus )(
            ITPCC __RPC_FAR * This,
            /* [in] */ VARIANT txn_in,
            /* [out] */ VARIANT __RPC_FAR *txn_out);

        HRESULT ( __stdcall __RPC_FAR
*CallSetComplete )(
            ITPCC __RPC_FAR * This);

        END_INTERFACE
    } ITPCCVtbl;

    interface ITPCC
    {
        CONST_VTBL struct ITPCCVtbl __RPC_FAR
*lpVtbl;
    };



#ifdef COBJMACROS


#define ITPCC_QueryInterface(This,riid,ppvObject) \
    (This)->lpVtbl ->
QueryInterface(This,riid,ppvObject)

#define ITPCC_AddRef(This)    \
    (This)->lpVtbl -> AddRef(This)

#define ITPCC_Release(This)   \
    (This)->lpVtbl -> Release(This)


#define ITPCC_NewOrder(This,txn_in,txn_out)       \
    (This)->lpVtbl -> NewOrder(This,txn_in,txn_out)

#define ITPCC_Payment(This,txn_in,txn_out)        \
    (This)->lpVtbl -> Payment(This,txn_in,txn_out)

#define ITPCC_Delivery(This,txn_in,txn_out)       \
    (This)->lpVtbl -> Delivery(This,txn_in,txn_out)

#define ITPCC_StockLevel(This,txn_in,txn_out)     \
    (This)->lpVtbl -> StockLevel(This,txn_in,txn_out)

#define ITPCC_OrderStatus(This,txn_in,txn_out)    \
    (This)->lpVtbl ->
OrderStatus(This,txn_in,txn_out)

#define ITPCC_CallSetComplete(This)     \
    (This)->lpVtbl -> CallSetComplete(This)

#endif /* COBJMACROS */


#endif    /* C style interface */



HRESULT __stdcall ITPCC_NewOrder_Proxy(
    ITPCC __RPC_FAR * This,
    /* [in] */ VARIANT txn_in,
    /* [out] */ VARIANT __RPC_FAR *txn_out);


void __RPC_STUB ITPCC_NewOrder_Stub(
    IRpcStubBuffer *This,
    IRpcChannelBuffer *_pRpcChannelBuffer,
    PRPC_MESSAGE _pRpcMessage,
    DWORD *_pdwStubPhase);


HRESULT __stdcall ITPCC_Payment_Proxy(
    ITPCC __RPC_FAR * This,
    /* [in] */ VARIANT txn_in,
    /* [out] */ VARIANT __RPC_FAR *txn_out);


void __RPC_STUB ITPCC_Payment_Stub(
    IRpcStubBuffer *This,
    IRpcChannelBuffer *_pRpcChannelBuffer,
    PRPC_MESSAGE _pRpcMessage,
    DWORD *_pdwStubPhase);


HRESULT __stdcall ITPCC_Delivery_Proxy(
    ITPCC __RPC_FAR * This,
    /* [in] */ VARIANT txn_in,
    /* [out] */ VARIANT __RPC_FAR *txn_out);


void __RPC_STUB ITPCC_Delivery_Stub(
    IRpcStubBuffer *This,
    IRpcChannelBuffer *_pRpcChannelBuffer,
    PRPC_MESSAGE _pRpcMessage,
    DWORD *_pdwStubPhase);


HRESULT __stdcall ITPCC_StockLevel_Proxy(
    ITPCC __RPC_FAR * This,
    /* [in] */ VARIANT txn_in,
    /* [out] */ VARIANT __RPC_FAR *txn_out);


void __RPC_STUB ITPCC_StockLevel_Stub(
    IRpcStubBuffer *This,
    IRpcChannelBuffer *_pRpcChannelBuffer,
    PRPC_MESSAGE _pRpcMessage,
    DWORD *_pdwStubPhase);


HRESULT __stdcall ITPCC_OrderStatus_Proxy(
    ITPCC __RPC_FAR * This,
    /* [in] */ VARIANT txn_in,
    /* [out] */ VARIANT __RPC_FAR *txn_out);


void __RPC_STUB ITPCC_OrderStatus_Stub(
    IRpcStubBuffer *This,
    IRpcChannelBuffer *_pRpcChannelBuffer,
    PRPC_MESSAGE _pRpcMessage,
    DWORD *_pdwStubPhase);
```


©2005 Hewlett-Packard Company. All rights reserved.

```
HRESULT __stdcall ITPCC_CallSetComplete_Proxy(
    ITPCC __RPC_FAR * This);


void __RPC_STUB ITPCC_CallSetComplete_Stub(
    IRpcStubBuffer *This,
    IRpcChannelBuffer *_pRpcChannelBuffer,
    PRPC_MESSAGE _pRpcMessage,
    DWORD *_pdwStubPhase);



#endif    /* __ITPCC_INTERFACE_DEFINED__ */


/* Additional Prototypes for ALL interfaces */

unsigned long             __RPC_USER
VARIANT_UserSize(     unsigned long __RPC_FAR *,
unsigned long            , VARIANT __RPC_FAR * );
unsigned char __RPC_FAR * __RPC_USER
VARIANT_UserMarshal(  unsigned long __RPC_FAR *,
unsigned char __RPC_FAR *, VARIANT __RPC_FAR * );
unsigned char __RPC_FAR * __RPC_USER
VARIANT_UserUnmarshal(unsigned long __RPC_FAR *,
unsigned char __RPC_FAR *, VARIANT __RPC_FAR * );
void                      __RPC_USER
VARIANT_UserFree(     unsigned long __RPC_FAR *,
VARIANT __RPC_FAR * );

/* end of Additional Prototypes */

#ifdef __cplusplus
}
#endif

#endif
```

tpcc_com_ps_p.c

```
#pragma warning( disable: 4049 )  /* more than 64k
source lines */

/* this ALWAYS GENERATED file contains the proxy stub
code */


 /* File created by MIDL compiler version 5.03.0280
*/
/* at Thu Dec 13 23:13:08 2001
 */
/* Compiler settings for .\src\tpcc_com_ps.idl:
    Oicf (OptLev=i2), W1, Zp8, env=Win32 (32b run),
ms_ext, c_ext
    error checks: allocation ref bounds_check enum
stub_data
    VC __declspec() decoration level:
         __declspec(uuid()), __declspec(selectany),
__declspec(novtable)
         DECLSPEC_UUID(), MIDL_INTERFACE()
*/
//@@MIDL_FILE_HEADING(  )

#if !defined(_M_IA64) && !defined(_M_AXP64)
#define USE_STUBLESS_PROXY


/* verify that the <rpcproxy.h> version is high
enough to compile this file*/
#ifndef __REDQ_RPCPROXY_H_VERSION__
#define __REQUIRED_RPCPROXY_H_VERSION__ 440
#endif


#include "rpcproxy.h"
#ifndef __RPCPROXY_H_VERSION__
#error this stub requires an updated version of
<rpcproxy.h>
#endif // __RPCPROXY_H_VERSION__


#include "tpcc_com_ps.h"

#define TYPE_FORMAT_STRING_SIZE   997
#define PROC_FORMAT_STRING_SIZE   193
#define TRANSMIT_AS_TABLE_SIZE    0
#define WIRE_MARSHAL_TABLE_SIZE   1

typedef struct _MIDL_TYPE_FORMAT_STRING
    {
    short          Pad;
    unsigned char  Format[ TYPE_FORMAT_STRING_SIZE ];
    } MIDL_TYPE_FORMAT_STRING;

typedef struct _MIDL_PROC_FORMAT_STRING
    {
    short          Pad;
    unsigned char  Format[ PROC_FORMAT_STRING_SIZE ];
    } MIDL_PROC_FORMAT_STRING;


extern const MIDL_TYPE_FORMAT_STRING
__MIDL_TypeFormatString;
extern const MIDL_PROC_FORMAT_STRING
__MIDL_ProcFormatString;


/* Standard interface: __MIDL_itf_tpcc_com_ps_0000,
ver. 0.0,

GUID={0x00000000,0x0000,0x0000,{0x00,0x00,0x00,0x00,0
x00,0x00,0x00,0x00}} */


/* Object interface: IUnknown, ver. 0.0,

GUID={0x00000000,0x0000,0x0000,{0xC0,0x00,0x00,0x00,0
x00,0x00,0x00,0x46}} */


/* Object interface: ITPCC, ver. 0.0,

GUID={0xFEEE6AA2,0x84B1,0x11d2,{0xBA,0x47,0x00,0xC0,0
x4F,0xBF,0xE0,0x8B}} */


extern const MIDL_STUB_DESC Object_StubDesc;


extern const MIDL_SERVER_INFO ITPCC_ServerInfo;

#pragma code_seg(".orpc")
static const unsigned short
ITPCC_FormatStringOffsetTable[] =
    {
    0,
    34,
    68,
    102,
    136,
    170
    };

static const MIDL_SERVER_INFO ITPCC_ServerInfo =
    {
    &Object_StubDesc,
    0,
    __MIDL_ProcFormatString.Format,
    &ITPCC_FormatStringOffsetTable[-3],
    0,
    0,
    0,
    0
    };

static const MIDL_STUBLESS_PROXY_INFO ITPCC_ProxyInfo
=
    {
    &Object_StubDesc,
    __MIDL_ProcFormatString.Format,
    &ITPCC_FormatStringOffsetTable[-3],
    0,
    0,
    0
    };

CINTERFACE_PROXY_VTABLE(9) _ITPCCProxyVtbl =
{
    &ITPCC_ProxyInfo,
    &IID_ITPCC,
    IUnknown_QueryInterface_Proxy,
    IUnknown_AddRef_Proxy,
    IUnknown_Release_Proxy ,
    (void *)-1 /* ITPCC::NewOrder */ ,
    (void *)-1 /* ITPCC::Payment */ ,
    (void *)-1 /* ITPCC::Delivery */ ,
    (void *)-1 /* ITPCC::StockLevel */ ,
    (void *)-1 /* ITPCC::OrderStatus */ ,
    (void *)-1 /* ITPCC::CallSetComplete */
};

const CInterfaceStubVtbl _ITPCCStubVtbl =
{
```


©2005 Hewlett-Packard Company. All rights reserved.

```
    &IID_ITPCC,
    &ITPCC_ServerInfo,
    9,
    0, /* pure interpreted */
    CStdStubBuffer_METHODS
};

extern const USER_MARSHAL_ROUTINE_QUADRUPLE
UserMarshalRoutines[ WIRE_MARSHAL_TABLE_SIZE ];

static const MIDL_STUB_DESC Object_StubDesc =
    {
    0,
    NdrOleAllocate,
    NdrOleFree,
    0,
    0,
    0,
    0,
    0,
    __MIDL_TypeFormatString.Format,
    1, /* -error bounds_check flag */
    0x20000, /* Ndr library version */
    0,
    0x5030118, /* MIDL Version 5.3.280 */
    0,
    UserMarshalRoutines,
    0,  /* notify & notify_flag routine table */
    0x1, /* MIDL flag */
    0,  /* Reserved3 */
    0,  /* Reserved4 */
    0   /* Reserved5 */
    };

#pragma data_seg(".rdata")

static const USER_MARSHAL_ROUTINE_QUADRUPLE
UserMarshalRoutines[ WIRE_MARSHAL_TABLE_SIZE ] =
        {

            {
            VARIANT_UserSize
            ,VARIANT_UserMarshal
            ,VARIANT_UserUnmarshal
            ,VARIANT_UserFree
            }

        };


#if !defined(__RPC_WIN32__)
#error  Invalid build platform for this stub.
#endif

#if !(TARGET_IS_NT40_OR_LATER)
#error You need a Windows NT 4.0 or later to run this
stub because it uses these features:
#error   -Oif or -Oicf, [wire_marshal] or
[user_marshal] attribute.
#error However, your C/C++ compilation flags indicate
you intend to run this app on earlier systems.
#error This app will die there with the
RPC_X_WRONG_STUB_VERSION error.
#endif


static const MIDL_PROC_FORMAT_STRING
__MIDL_ProcFormatString =
    {
        0,
        {

          /* Procedure NewOrder */

                                0x33,               /*
FC_AUTO_HANDLE */
                                0x6c,               /*
Old Flags:  object, Oi2 */
/*  2 */  NdrFcLong( 0x0 ),   /* 0 */
/*  6 */  NdrFcShort( 0x3 ),  /* 3 */
#ifndef _ALPHA_
#ifndef _PPC_
#if !defined(_MIPS_)
/*  8 */  NdrFcShort( 0x1c ), /* x86 Stack
size/offset = 28 */
#else
                                NdrFcShort( 0x20 ), /*
MIPS Stack size/offset = 32 */
#endif
#else
                                NdrFcShort( 0x20 ), /*
PPC Stack size/offset = 32 */
#endif
#else
                                NdrFcShort( 0x28 ), /*
Alpha Stack size/offset = 40 */
#endif
/* 10 */  NdrFcShort( 0x0 ),  /* 0 */
/* 12 */  NdrFcShort( 0x8 ),  /* 8 */
/* 14 */  0x7,                /* Oi2 Flags:  srv must
size, clt must size, has return, */
                                0x3,                /*
3 */

          /* Parameter txn_in */

/* 16 */  NdrFcShort( 0x8b ), /* Flags:  must size,
must free, in, by val, */
#ifndef _ALPHA_
#ifndef _PPC_
#if !defined(_MIPS_)
/* 18 */  NdrFcShort( 0x4 ),  /* x86 Stack
size/offset = 4 */
#else
                                NdrFcShort( 0x8 ),  /*
MIPS Stack size/offset = 8 */
#endif
#else
                                NdrFcShort( 0x8 ),  /*
PPC Stack size/offset = 8 */
#endif
#else
                                NdrFcShort( 0x8 ),  /*
Alpha Stack size/offset = 8 */
#endif
/* 20 */  NdrFcShort( 0x3c8 ),          /* Type
Offset=968 */

          /* Parameter txn_out */

/* 22 */  NdrFcShort( 0x4113 ),         /* Flags:
must size, must free, out, simple ref, srv alloc
size=16 */
#ifndef _ALPHA_
#ifndef _PPC_
#if !defined(_MIPS_)
/* 24 */  NdrFcShort( 0x14 ), /* x86 Stack
size/offset = 20 */
#else
                                NdrFcShort( 0x18 ), /*
MIPS Stack size/offset = 24 */
#endif
#else
                                NdrFcShort( 0x18 ), /*
PPC Stack size/offset = 24 */
#endif
#else
                                NdrFcShort( 0x18 ), /*
Alpha Stack size/offset = 24 */
#endif
/* 26 */  NdrFcShort( 0x3da ),          /* Type
Offset=986 */

          /* Return value */

/* 28 */  NdrFcShort( 0x70 ), /* Flags:  out, return,
base type, */
#ifndef _ALPHA_
#ifndef _PPC_
#if !defined(_MIPS_)
/* 30 */  NdrFcShort( 0x18 ), /* x86 Stack
size/offset = 24 */
#else
                                NdrFcShort( 0x1c ), /*
MIPS Stack size/offset = 28 */
#endif
#else
                                NdrFcShort( 0x1c ), /*
PPC Stack size/offset = 28 */
#endif
#else
                                NdrFcShort( 0x20 ), /*
Alpha Stack size/offset = 32 */
#endif
/* 32 */  0x8,                /* FC_LONG */
                                0x0,                /*
0 */

          /* Procedure Payment */

/* 34 */  0x33,               /* FC_AUTO_HANDLE */
                                0x6c,               /*
Old Flags:  object, Oi2 */
/* 36 */  NdrFcLong( 0x0 ),   /* 0 */
/* 40 */  NdrFcShort( 0x4 ),  /* 4 */
#ifndef _ALPHA_
#ifndef _PPC_
#if !defined(_MIPS_)
```


©2005 Hewlett-Packard Company. All rights reserved.

```
/* 42 */  NdrFcShort( 0x1c ), /* x86 Stack
size/offset = 28 */
#else
                                NdrFcShort( 0x20 ), /*
MIPS Stack size/offset = 32 */
#endif
#else
                                NdrFcShort( 0x20 ), /*
PPC Stack size/offset = 32 */
#endif
#else
                                NdrFcShort( 0x28 ), /*
Alpha Stack size/offset = 40 */
#endif
/* 44 */  NdrFcShort( 0x0 ),  /* 0 */
/* 46 */  NdrFcShort( 0x8 ),  /* 8 */
/* 48 */  0x7,                /* Oi2 Flags:  srv must
size, clt must size, has return, */
                                0x3,                /*
3 */

          /* Parameter txn_in */

/* 50 */  NdrFcShort( 0x8b ), /* Flags:  must size,
must free, in, by val, */
#ifndef _ALPHA_
#ifndef _PPC_
#if !defined(_MIPS_)
/* 52 */  NdrFcShort( 0x4 ),  /* x86 Stack
size/offset = 4 */
#else
                                NdrFcShort( 0x8 ),  /*
MIPS Stack size/offset = 8 */
#endif
#else
                                NdrFcShort( 0x8 ),  /*
PPC Stack size/offset = 8 */
#endif
#else
                                NdrFcShort( 0x8 ),  /*
Alpha Stack size/offset = 8 */
#endif
/* 54 */  NdrFcShort( 0x3c8 ),          /* Type
Offset=968 */

          /* Parameter txn_out */

/* 56 */  NdrFcShort( 0x4113 ),         /* Flags:
must size, must free, out, simple ref, srv alloc
size=16 */
#ifndef _ALPHA_
#ifndef _PPC_
#if !defined(_MIPS_)
/* 58 */  NdrFcShort( 0x14 ), /* x86 Stack
size/offset = 20 */
#else
                                NdrFcShort( 0x18 ), /*
MIPS Stack size/offset = 24 */
#endif
#else
                                NdrFcShort( 0x18 ), /*
PPC Stack size/offset = 24 */
#endif
#else
                                NdrFcShort( 0x18 ), /*
Alpha Stack size/offset = 24 */
#endif
/* 60 */  NdrFcShort( 0x3da ),          /* Type
Offset=986 */

          /* Return value */

/* 62 */  NdrFcShort( 0x70 ), /* Flags:  out, return,
base type, */
#ifndef _ALPHA_
#ifndef _PPC_
#if !defined(_MIPS_)
/* 64 */  NdrFcShort( 0x18 ), /* x86 Stack
size/offset = 24 */
#else
                                NdrFcShort( 0x1c ), /*
MIPS Stack size/offset = 28 */
#endif
#else
                                NdrFcShort( 0x1c ), /*
PPC Stack size/offset = 28 */
#endif
#else
                                NdrFcShort( 0x20 ), /*
Alpha Stack size/offset = 32 */
#endif
/* 66 */  0x8,                /* FC_LONG */
                                0x0,                /*
0 */

          /* Procedure Delivery */

/* 68 */  0x33,               /* FC_AUTO_HANDLE */
                                0x6c,               /*
Old Flags:  object, Oi2 */
/* 70 */  NdrFcLong( 0x0 ),   /* 0 */
/* 74 */  NdrFcShort( 0x5 ),  /* 5 */
#ifndef _ALPHA_
#ifndef _PPC_
#if !defined(_MIPS_)
/* 76 */  NdrFcShort( 0x1c ), /* x86 Stack
size/offset = 28 */
#else
                                NdrFcShort( 0x20 ), /*
MIPS Stack size/offset = 32 */
#endif
#else
                                NdrFcShort( 0x20 ), /*
PPC Stack size/offset = 32 */
#endif
#else
                                NdrFcShort( 0x28 ), /*
Alpha Stack size/offset = 40 */
#endif
/* 78 */  NdrFcShort( 0x0 ),  /* 0 */
/* 80 */  NdrFcShort( 0x8 ),  /* 8 */
/* 82 */  0x7,                /* Oi2 Flags:  srv must
size, clt must size, has return, */
                                0x3,                /*
3 */

          /* Parameter txn_in */

/* 84 */  NdrFcShort( 0x8b ), /* Flags:  must size,
must free, in, by val, */
#ifndef _ALPHA_
#ifndef _PPC_
#if !defined(_MIPS_)
/* 86 */  NdrFcShort( 0x4 ),  /* x86 Stack
size/offset = 4 */
#else
                                NdrFcShort( 0x8 ),  /*
MIPS Stack size/offset = 8 */
#endif
#else
                                NdrFcShort( 0x8 ),  /*
PPC Stack size/offset = 8 */
#endif
#else
                                NdrFcShort( 0x8 ),  /*
Alpha Stack size/offset = 8 */
#endif
/* 88 */  NdrFcShort( 0x3c8 ),          /* Type
Offset=968 */

          /* Parameter txn_out */

/* 90 */  NdrFcShort( 0x4113 ),         /* Flags:
must size, must free, out, simple ref, srv alloc
size=16 */
#ifndef _ALPHA_
#ifndef _PPC_
#if !defined(_MIPS_)
/* 92 */  NdrFcShort( 0x14 ), /* x86 Stack
size/offset = 20 */
#else
                                NdrFcShort( 0x18 ), /*
MIPS Stack size/offset = 24 */
#endif
#else
                                NdrFcShort( 0x18 ), /*
PPC Stack size/offset = 24 */
#endif
#else
                                NdrFcShort( 0x18 ), /*
Alpha Stack size/offset = 24 */
#endif
/* 94 */  NdrFcShort( 0x3da ),          /* Type
Offset=986 */

          /* Return value */

/* 96 */  NdrFcShort( 0x70 ), /* Flags:  out, return,
base type, */
#ifndef _ALPHA_
#ifndef _PPC_
#if !defined(_MIPS_)
/* 98 */  NdrFcShort( 0x18 ), /* x86 Stack
size/offset = 24 */
#else
                                NdrFcShort( 0x1c ), /*
MIPS Stack size/offset = 28 */
#endif
#else
```


©2005 Hewlett-Packard Company. All rights reserved.

```
                                NdrFcShort( 0x1c ), /*
PPC Stack size/offset = 28 */
#endif
#else
                                NdrFcShort( 0x20 ), /*
Alpha Stack size/offset = 32 */
#endif
/* 100 */ 0x8,                  /* FC_LONG */
                                0x0,                /*
0 */

          /* Procedure StockLevel */

/* 102 */ 0x33,                 /* FC_AUTO_HANDLE */
                                0x6c,               /*
Old Flags:  object, Oi2 */
/* 104 */ NdrFcLong( 0x0 ),    /* 0 */
/* 108 */ NdrFcShort( 0x6 ),   /* 6 */
#ifndef _ALPHA_
#ifndef _PPC_
#if !defined(_MIPS_)
/* 110 */ NdrFcShort( 0x1c ), /* x86 Stack
size/offset = 28 */
#else
                                NdrFcShort( 0x20 ), /*
MIPS Stack size/offset = 32 */
#endif
#else
                                NdrFcShort( 0x20 ), /*
PPC Stack size/offset = 32 */
#endif
#else
                                NdrFcShort( 0x28 ), /*
Alpha Stack size/offset = 40 */
#endif
/* 112 */ NdrFcShort( 0x0 ),   /* 0 */
/* 114 */ NdrFcShort( 0x8 ),   /* 8 */
/* 116 */ 0x7,                  /* Oi2 Flags:  srv must
size, clt must size, has return, */
                                0x3,                /*
3 */

          /* Parameter txn_in */

/* 118 */ NdrFcShort( 0x8b ), /* Flags:  must size,
must free, in, by val, */
#ifndef _ALPHA_
#ifndef _PPC_
#if !defined(_MIPS_)
/* 120 */ NdrFcShort( 0x4 ),   /* x86 Stack
size/offset = 4 */
#else
                                NdrFcShort( 0x8 ),  /*
MIPS Stack size/offset = 8 */
#endif
#else
                                NdrFcShort( 0x8 ),  /*
PPC Stack size/offset = 8 */
#endif
#else
                                NdrFcShort( 0x8 ),  /*
Alpha Stack size/offset = 8 */
#endif
/* 122 */ NdrFcShort( 0x3c8 ),          /* Type
Offset=968 */

          /* Parameter txn_out */

/* 124 */ NdrFcShort( 0x4113 ),         /* Flags:
must size, must free, out, simple ref, srv alloc
size=16 */
#ifndef _ALPHA_
#ifndef _PPC_
#if !defined(_MIPS_)
/* 126 */ NdrFcShort( 0x14 ), /* x86 Stack
size/offset = 20 */
#else
                                NdrFcShort( 0x18 ), /*
MIPS Stack size/offset = 24 */
#endif
#else
                                NdrFcShort( 0x18 ), /*
PPC Stack size/offset = 24 */
#endif
#else
                                NdrFcShort( 0x18 ), /*
Alpha Stack size/offset = 24 */
#endif
/* 128 */ NdrFcShort( 0x3da ),          /* Type
Offset=986 */

          /* Return value */

/* 130 */ NdrFcShort( 0x70 ), /* Flags:  out, return,
base type, */
#ifndef _ALPHA_
#ifndef _PPC_
#if !defined(_MIPS_)
/* 132 */ NdrFcShort( 0x18 ), /* x86 Stack
size/offset = 24 */
#else
                                NdrFcShort( 0x1c ), /*
MIPS Stack size/offset = 28 */
#endif
#else
                                NdrFcShort( 0x1c ), /*
PPC Stack size/offset = 28 */
#endif
#else
                                NdrFcShort( 0x20 ), /*
Alpha Stack size/offset = 32 */
#endif
/* 134 */ 0x8,                  /* FC_LONG */
                                0x0,                /*
0 */

          /* Procedure OrderStatus */

/* 136 */ 0x33,                 /* FC_AUTO_HANDLE */
                                0x6c,               /*
Old Flags:  object, Oi2 */
/* 138 */ NdrFcLong( 0x0 ),    /* 0 */
/* 142 */ NdrFcShort( 0x7 ),   /* 7 */
#ifndef _ALPHA_
#ifndef _PPC_
#if !defined(_MIPS_)
/* 144 */ NdrFcShort( 0x1c ), /* x86 Stack
size/offset = 28 */
#else
                                NdrFcShort( 0x20 ), /*
MIPS Stack size/offset = 32 */
#endif
#else
                                NdrFcShort( 0x20 ), /*
PPC Stack size/offset = 32 */
#endif
#else
                                NdrFcShort( 0x28 ), /*
Alpha Stack size/offset = 40 */
#endif
/* 146 */ NdrFcShort( 0x0 ),   /* 0 */
/* 148 */ NdrFcShort( 0x8 ),   /* 8 */
/* 150 */ 0x7,                  /* Oi2 Flags:  srv must
size, clt must size, has return, */
                                0x3,                /*
3 */

          /* Parameter txn_in */

/* 152 */ NdrFcShort( 0x8b ), /* Flags:  must size,
must free, in, by val, */
#ifndef _ALPHA_
#ifndef _PPC_
#if !defined(_MIPS_)
/* 154 */ NdrFcShort( 0x4 ),   /* x86 Stack
size/offset = 4 */
#else
                                NdrFcShort( 0x8 ),  /*
MIPS Stack size/offset = 8 */
#endif
#else
                                NdrFcShort( 0x8 ),  /*
PPC Stack size/offset = 8 */
#endif
#else
                                NdrFcShort( 0x8 ),  /*
Alpha Stack size/offset = 8 */
#endif
/* 156 */ NdrFcShort( 0x3c8 ),          /* Type
Offset=968 */

          /* Parameter txn_out */

/* 158 */ NdrFcShort( 0x4113 ),         /* Flags:
must size, must free, out, simple ref, srv alloc
size=16 */
#ifndef _ALPHA_
#ifndef _PPC_
#if !defined(_MIPS_)
/* 160 */ NdrFcShort( 0x14 ), /* x86 Stack
size/offset = 20 */
#else
                                NdrFcShort( 0x18 ), /*
MIPS Stack size/offset = 24 */
#endif
#else
                                NdrFcShort( 0x18 ), /*
PPC Stack size/offset = 24 */
#endif
```


©2005 Hewlett-Packard Company. All rights reserved.

```
#else
                                NdrFcShort( 0x18 ), /*
Alpha Stack size/offset = 24 */
#endif
/* 162 */ NdrFcShort( 0x3da ),          /* Type
Offset=986 */

          /* Return value */

/* 164 */ NdrFcShort( 0x70 ), /* Flags:  out, return,
base type, */
#ifndef _ALPHA_
#ifndef _PPC_
#if !defined(_MIPS_)
/* 166 */ NdrFcShort( 0x18 ), /* x86 Stack
size/offset = 24 */
#else
                                NdrFcShort( 0x1c ), /*
MIPS Stack size/offset = 28 */
#endif
#else
                                NdrFcShort( 0x1c ), /*
PPC Stack size/offset = 28 */
#endif
#else
                                NdrFcShort( 0x20 ), /*
Alpha Stack size/offset = 32 */
#endif
/* 168 */ 0x8,                  /* FC_LONG */
                                0x0,                /*
0 */

          /* Procedure CallSetComplete */

/* 170 */ 0x33,                 /* FC_AUTO_HANDLE */
                                0x6c,               /*
Old Flags:  object, Oi2 */
/* 172 */ NdrFcLong( 0x0 ),   /* 0 */
/* 176 */ NdrFcShort( 0x8 ),  /* 8 */
#ifndef _ALPHA_
/* 178 */ NdrFcShort( 0x8 ),  /* x86, MIPS, PPC Stack
size/offset = 8 */
#else
                                NdrFcShort( 0x10 ), /*
Alpha Stack size/offset = 16 */
#endif
/* 180 */ NdrFcShort( 0x0 ),  /* 0 */
/* 182 */ NdrFcShort( 0x8 ),  /* 8 */
/* 184 */ 0x4,                  /* Oi2 Flags:  has
return, */
                                0x1,                /*
1 */

          /* Return value */

/* 186 */ NdrFcShort( 0x70 ), /* Flags:  out, return,
base type, */
#ifndef _ALPHA_
/* 188 */ NdrFcShort( 0x4 ),  /* x86, MIPS, PPC Stack
size/offset = 4 */
#else
                                NdrFcShort( 0x8 ),  /*
Alpha Stack size/offset = 8 */
#endif
/* 190 */ 0x8,                  /* FC_LONG */
                                0x0,                /*
0 */

                                0x0
        }
    };

static const MIDL_TYPE_FORMAT_STRING
__MIDL_TypeFormatString =
    {
        0,
        {
                                NdrFcShort( 0x0 ),  /*
0 */
/*  2 */
                                0x12, 0x0,          /*
FC_UP */
/*  4 */  NdrFcShort( 0x3b0 ),          /* Offset=
944 (948) */
/*  6 */
                                0x2b,               /*
FC_NON_ENCAPSULATED_UNION */
                                0x9,                /*
FC_ULONG */
/*  8 */  0x7,                  /* Corr desc: FC_USHORT
*/
                                0x0,                /*
*/
/* 10 */  NdrFcShort( 0xfff8 ),         /* -8 */
/* 12 */  NdrFcShort( 0x2 ),  /* Offset= 2 (14) */
/* 14 */  NdrFcShort( 0x10 ), /* 16 */
/* 16 */  NdrFcShort( 0x2b ), /* 43 */
/* 18 */  NdrFcLong( 0x3 ),   /* 3 */
/* 22 */  NdrFcShort( 0x8008 ),         /* Simple arm
type: FC_LONG */
/* 24 */  NdrFcLong( 0x11 ),  /* 17 */
/* 28 */  NdrFcShort( 0x8001 ),         /* Simple arm
type: FC_BYTE */
/* 30 */  NdrFcLong( 0x2 ),   /* 2 */
/* 34 */  NdrFcShort( 0x8006 ),         /* Simple arm
type: FC_SHORT */
/* 36 */  NdrFcLong( 0x4 ),   /* 4 */
/* 40 */  NdrFcShort( 0x800a ),         /* Simple arm
type: FC_FLOAT */
/* 42 */  NdrFcLong( 0x5 ),   /* 5 */
/* 46 */  NdrFcShort( 0x800c ),         /* Simple arm
type: FC_DOUBLE */
/* 48 */  NdrFcLong( 0xb ),   /* 11 */
/* 52 */  NdrFcShort( 0x8006 ),         /* Simple arm
type: FC_SHORT */
/* 54 */  NdrFcLong( 0xa ),   /* 10 */
/* 58 */  NdrFcShort( 0x8008 ),         /* Simple arm
type: FC_LONG */
/* 60 */  NdrFcLong( 0x6 ),   /* 6 */
/* 64 */  NdrFcShort( 0xd6 ), /* Offset= 214 (278) */
/* 66 */  NdrFcLong( 0x7 ),   /* 7 */
/* 70 */  NdrFcShort( 0x800c ),         /* Simple arm
type: FC_DOUBLE */
/* 72 */  NdrFcLong( 0x8 ),   /* 8 */
/* 76 */  NdrFcShort( 0xd0 ), /* Offset= 208 (284) */
/* 78 */  NdrFcLong( 0xd ),   /* 13 */
/* 82 */  NdrFcShort( 0xe2 ), /* Offset= 226 (308) */
/* 84 */  NdrFcLong( 0x9 ),   /* 9 */
/* 88 */  NdrFcShort( 0xee ), /* Offset= 238 (326) */
/* 90 */  NdrFcLong( 0x2000 ),          /* 8192 */
/* 94 */  NdrFcShort( 0xfa ), /* Offset= 250 (344) */
/* 96 */  NdrFcLong( 0x24 ),  /* 36 */
/* 100 */ NdrFcShort( 0x308 ),          /* Offset=
776 (876) */
/* 102 */ NdrFcLong( 0x4024 ),          /* 16420 */
/* 106 */ NdrFcShort( 0x302 ),          /* Offset=
770 (876) */
/* 108 */ NdrFcLong( 0x4011 ),          /* 16401 */
/* 112 */ NdrFcShort( 0x300 ),          /* Offset=
768 (880) */
/* 114 */ NdrFcLong( 0x4002 ),          /* 16386 */
/* 118 */ NdrFcShort( 0x2fe ),          /* Offset=
766 (884) */
/* 120 */ NdrFcLong( 0x4003 ),          /* 16387 */
/* 124 */ NdrFcShort( 0x2fc ),          /* Offset=
764 (888) */
/* 126 */ NdrFcLong( 0x4004 ),          /* 16388 */
/* 130 */ NdrFcShort( 0x2fa ),          /* Offset=
762 (892) */
/* 132 */ NdrFcLong( 0x4005 ),          /* 16389 */
/* 136 */ NdrFcShort( 0x2f8 ),          /* Offset=
760 (896) */
/* 138 */ NdrFcLong( 0x400b ),          /* 16395 */
/* 142 */ NdrFcShort( 0x2e6 ),          /* Offset=
742 (884) */
/* 144 */ NdrFcLong( 0x400a ),          /* 16394 */
/* 148 */ NdrFcShort( 0x2e4 ),          /* Offset=
740 (888) */
/* 150 */ NdrFcLong( 0x4006 ),          /* 16390 */
/* 154 */ NdrFcShort( 0x2ea ),          /* Offset=
746 (900) */
/* 156 */ NdrFcLong( 0x4007 ),          /* 16391 */
/* 160 */ NdrFcShort( 0x2e0 ),          /* Offset=
736 (896) */
/* 162 */ NdrFcLong( 0x4008 ),          /* 16392 */
/* 166 */ NdrFcShort( 0x2e2 ),          /* Offset=
738 (904) */
/* 168 */ NdrFcLong( 0x400d ),          /* 16397 */
/* 172 */ NdrFcShort( 0x2e0 ),          /* Offset=
736 (908) */
/* 174 */ NdrFcLong( 0x4009 ),          /* 16393 */
/* 178 */ NdrFcShort( 0x2de ),          /* Offset=
734 (912) */
/* 180 */ NdrFcLong( 0x6000 ),          /* 24576 */
/* 184 */ NdrFcShort( 0x2dc ),          /* Offset=
732 (916) */
/* 186 */ NdrFcLong( 0x400c ),          /* 16396 */
/* 190 */ NdrFcShort( 0x2da ),          /* Offset=
730 (920) */
/* 192 */ NdrFcLong( 0x10 ),  /* 16 */
/* 196 */ NdrFcShort( 0x8002 ),         /* Simple arm
type: FC_CHAR */
/* 198 */ NdrFcLong( 0x12 ),  /* 18 */
/* 202 */ NdrFcShort( 0x8006 ),         /* Simple arm
type: FC_SHORT */
/* 204 */ NdrFcLong( 0x13 ),  /* 19 */
/* 208 */ NdrFcShort( 0x8008 ),         /* Simple arm
type: FC_LONG */
/* 210 */ NdrFcLong( 0x16 ),  /* 22 */
```


©2005 Hewlett-Packard Company. All rights reserved.

```
/* 214 */ NdrFcShort( 0x8008 ),         /* Simple arm
type: FC_LONG */
/* 216 */ NdrFcLong( 0x17 ),  /* 23 */
/* 220 */ NdrFcShort( 0x8008 ),         /* Simple arm
type: FC_LONG */
/* 222 */ NdrFcLong( 0xe ),   /* 14 */
/* 226 */ NdrFcShort( 0x2be ),          /* Offset=
702 (928) */
/* 228 */ NdrFcLong( 0x400e ),          /* 16398 */
/* 232 */ NdrFcShort( 0x2c4 ),          /* Offset=
708 (940) */
/* 234 */ NdrFcLong( 0x4010 ),          /* 16400 */
/* 238 */ NdrFcShort( 0x2c2 ),          /* Offset=
706 (944) */
/* 240 */ NdrFcLong( 0x4012 ),          /* 16402 */
/* 244 */ NdrFcShort( 0x280 ),          /* Offset=
640 (884) */
/* 246 */ NdrFcLong( 0x4013 ),          /* 16403 */
/* 250 */ NdrFcShort( 0x27e ),          /* Offset=
638 (888) */
/* 252 */ NdrFcLong( 0x4016 ),          /* 16406 */
/* 256 */ NdrFcShort( 0x278 ),          /* Offset=
632 (888) */
/* 258 */ NdrFcLong( 0x4017 ),          /* 16407 */
/* 262 */ NdrFcShort( 0x272 ),          /* Offset=
626 (888) */
/* 264 */ NdrFcLong( 0x0 ),   /* 0 */
/* 268 */ NdrFcShort( 0x0 ),  /* Offset= 0 (268) */
/* 270 */ NdrFcLong( 0x1 ),   /* 1 */
/* 274 */ NdrFcShort( 0x0 ),  /* Offset= 0 (274) */
/* 276 */ NdrFcShort( 0xffffffff ),     /* Offset= -1
(275) */
/* 278 */
                                0x15,               /*
FC_STRUCT */
                                0x7,                /*
7 */
/* 280 */ NdrFcShort( 0x8 ),  /* 8 */
/* 282 */ 0xb,                /* FC_HYPER */
                                0x5b,               /*
FC_END */
/* 284 */
                                0x12, 0x0,          /*
FC_UP */
/* 286 */ NdrFcShort( 0xc ),  /* Offset= 12 (298) */
/* 288 */
                                0x1b,               /*
FC_CARRAY */
                                0x1,                /*
1 */
/* 290 */ NdrFcShort( 0x2 ),  /* 2 */
/* 292 */ 0x9,                /* Corr desc: FC_ULONG
*/
                                0x0,                /*
*/
/* 294 */ NdrFcShort( 0xfffc ),         /* -4 */
/* 296 */ 0x6,                /* FC_SHORT */
                                0x5b,               /*
FC_END */
/* 298 */
                                0x17,               /*
FC_CSTRUCT */
                                0x3,                /*
3 */
/* 300 */ NdrFcShort( 0x8 ),  /* 8 */
/* 302 */ NdrFcShort( 0xfffffff2 ),     /* Offset= -
14 (288) */
/* 304 */ 0x8,                /* FC_LONG */
                                0x8,                /*
FC_LONG */
/* 306 */ 0x5c,               /* FC_PAD */
                                0x5b,               /*
FC_END */
/* 308 */
                                0x2f,               /*
FC_IP */
                                0x5a,               /*
FC_CONSTANT_IID */
/* 310 */ NdrFcLong( 0x0 ),   /* 0 */
/* 314 */ NdrFcShort( 0x0 ),  /* 0 */
/* 316 */ NdrFcShort( 0x0 ),  /* 0 */
/* 318 */ 0xc0,               /* 192 */
                                0x0,                /*
0 */
/* 320 */ 0x0,                /* 0 */
                                0x0,                /*
0 */
/* 322 */ 0x0,                /* 0 */
                                0x0,                /*
0 */
/* 324 */ 0x0,                /* 0 */
                                0x46,               /*
70 */
/* 326 */
                                0x2f,               /*
FC_IP */
                                0x5a,               /*
FC_CONSTANT_IID */
/* 328 */ NdrFcLong( 0x20400 ),         /* 132096 */
/* 332 */ NdrFcShort( 0x0 ),  /* 0 */
/* 334 */ NdrFcShort( 0x0 ),  /* 0 */
/* 336 */ 0xc0,               /* 192 */
                                0x0,                /*
0 */
/* 338 */ 0x0,                /* 0 */
                                0x0,                /*
0 */
/* 340 */ 0x0,                /* 0 */
                                0x0,                /*
0 */
/* 342 */ 0x0,                /* 0 */
                                0x46,               /*
70 */
/* 344 */
                                0x12, 0x10,         /*
FC_UP [pointer_deref] */
/* 346 */ NdrFcShort( 0x2 ),  /* Offset= 2 (348) */
/* 348 */
                                0x12, 0x0,          /*
FC_UP */
/* 350 */ NdrFcShort( 0x1fc ),          /* Offset=
508 (858) */
/* 352 */
                                0x2a,               /*
FC_ENCAPSULATED_UNION */
                                0x49,               /*
73 */
/* 354 */ NdrFcShort( 0x18 ), /* 24 */
/* 356 */ NdrFcShort( 0xa ),  /* 10 */
/* 358 */ NdrFcLong( 0x8 ),   /* 8 */
/* 362 */ NdrFcShort( 0x58 ), /* Offset= 88 (450) */
/* 364 */ NdrFcLong( 0xd ),   /* 13 */
/* 368 */ NdrFcShort( 0x78 ), /* Offset= 120 (488) */
/* 370 */ NdrFcLong( 0x9 ),   /* 9 */
/* 374 */ NdrFcShort( 0x94 ), /* Offset= 148 (522) */
/* 376 */ NdrFcLong( 0xc ),   /* 12 */
/* 380 */ NdrFcShort( 0xbc ), /* Offset= 188 (568) */
/* 382 */ NdrFcLong( 0x24 ),  /* 36 */
/* 386 */ NdrFcShort( 0x114 ),          /* Offset=
276 (662) */
/* 388 */ NdrFcLong( 0x800d ),          /* 32781 */
/* 392 */ NdrFcShort( 0x130 ),          /* Offset=
304 (696) */
/* 394 */ NdrFcLong( 0x10 ),  /* 16 */
/* 398 */ NdrFcShort( 0x148 ),          /* Offset=
328 (726) */
/* 400 */ NdrFcLong( 0x2 ),   /* 2 */
/* 404 */ NdrFcShort( 0x160 ),          /* Offset=
352 (756) */
/* 406 */ NdrFcLong( 0x3 ),   /* 3 */
/* 410 */ NdrFcShort( 0x178 ),          /* Offset=
376 (786) */
/* 412 */ NdrFcLong( 0x14 ),  /* 20 */
/* 416 */ NdrFcShort( 0x190 ),          /* Offset=
400 (816) */
/* 418 */ NdrFcShort( 0xffffffff ),     /* Offset= -1
(417) */
/* 420 */
                                0x1b,               /*
FC_CARRAY */
                                0x3,                /*
3 */
/* 422 */ NdrFcShort( 0x4 ),  /* 4 */
/* 424 */ 0x19,               /* Corr desc:  field
pointer, FC_ULONG */
                                0x0,                /*
*/
/* 426 */ NdrFcShort( 0x0 ),  /* 0 */
/* 428 */
                                0x4b,               /*
FC_PP */
                                0x5c,               /*
FC_PAD */
/* 430 */
                                0x48,               /*
FC_VARIABLE_REPEAT */
                                0x49,               /*
FC_FIXED_OFFSET */
/* 432 */ NdrFcShort( 0x4 ),  /* 4 */
/* 434 */ NdrFcShort( 0x0 ),  /* 0 */
/* 436 */ NdrFcShort( 0x1 ),  /* 1 */
/* 438 */ NdrFcShort( 0x0 ),  /* 0 */
/* 440 */ NdrFcShort( 0x0 ),  /* 0 */
/* 442 */ 0x12, 0x0,          /* FC_UP */
/* 444 */ NdrFcShort( 0xffffff6e ),     /* Offset= -
146 (298) */
/* 446 */
```


©2005 Hewlett-Packard Company. All rights reserved.

```
                                0x5b,               /*
FC_END */

                                0x8,                /*
FC_LONG */
/* 448 */ 0x5c,                 /* FC_PAD */
                                0x5b,               /*
FC_END */
/* 450 */

                                0x16,               /*
FC_PSTRUCT */
                                0x3,                /*
3 */
/* 452 */ NdrFcShort( 0x8 ),    /* 8 */
/* 454 */

                                0x4b,               /*
FC_PP */
                                0x5c,               /*
FC_PAD */
/* 456 */

                                0x46,               /*
FC_NO_REPEAT */
                                0x5c,               /*
FC_PAD */
/* 458 */ NdrFcShort( 0x4 ),    /* 4 */
/* 460 */ NdrFcShort( 0x4 ),    /* 4 */
/* 462 */ 0x11, 0x0,            /* FC_RP */
/* 464 */ NdrFcShort( 0xffffffd4 ),     /* Offset= -
44 (420) */
/* 466 */

                                0x5b,               /*
FC_END */

                                0x8,                /*
FC_LONG */
/* 468 */ 0x8,                  /* FC_LONG */
                                0x5b,               /*
FC_END */
/* 470 */

                                0x21,               /*
FC_BOGUS_ARRAY */
                                0x3,                /*
3 */
/* 472 */ NdrFcShort( 0x0 ),    /* 0 */
/* 474 */ 0x19,                 /* Corr desc:  field
pointer, FC_ULONG */
                                0x0,                /*
*/
/* 476 */ NdrFcShort( 0x0 ),    /* 0 */
/* 478 */ NdrFcLong( 0xffffffff ),      /* -1 */
/* 482 */ 0x4c,                 /* FC_EMBEDDED_COMPLEX
*/
                                0x0,                /*
0 */
/* 484 */ NdrFcShort( 0xffffff50 ),     /* Offset= -
176 (308) */
/* 486 */ 0x5c,                 /* FC_PAD */
                                0x5b,               /*
FC_END */
/* 488 */

                                0x1a,               /*
FC_BOGUS_STRUCT */
                                0x3,                /*
3 */
/* 490 */ NdrFcShort( 0x8 ),    /* 8 */
/* 492 */ NdrFcShort( 0x0 ),    /* 0 */
/* 494 */ NdrFcShort( 0x6 ),    /* Offset= 6 (500) */
/* 496 */ 0x8,                  /* FC_LONG */
                                0x36,               /*
FC_POINTER */
/* 498 */ 0x5c,                 /* FC_PAD */
                                0x5b,               /*
FC_END */
/* 500 */

                                0x11, 0x0,          /*
FC_RP */
/* 502 */ NdrFcShort( 0xffffffe0 ),     /* Offset= -
32 (470) */
/* 504 */

                                0x21,               /*
FC_BOGUS_ARRAY */
                                0x3,                /*
3 */
/* 506 */ NdrFcShort( 0x0 ),    /* 0 */
/* 508 */ 0x19,                 /* Corr desc:  field
pointer, FC_ULONG */
                                0x0,                /*
*/
/* 510 */ NdrFcShort( 0x0 ),    /* 0 */
/* 512 */ NdrFcLong( 0xffffffff ),      /* -1 */
/* 516 */ 0x4c,                 /* FC_EMBEDDED_COMPLEX
*/
                                0x0,                /*
0 */
/* 518 */ NdrFcShort( 0xffffff40 ),     /* Offset= -
192 (326) */
/* 520 */ 0x5c,                 /* FC_PAD */
                                0x5b,               /*
FC_END */
/* 522 */

                                0x1a,               /*
FC_BOGUS_STRUCT */
                                0x3,                /*
3 */
/* 524 */ NdrFcShort( 0x8 ),    /* 8 */
/* 526 */ NdrFcShort( 0x0 ),    /* 0 */
/* 528 */ NdrFcShort( 0x6 ),    /* Offset= 6 (534) */
/* 530 */ 0x8,                  /* FC_LONG */
                                0x36,               /*
FC_POINTER */
/* 532 */ 0x5c,                 /* FC_PAD */
                                0x5b,               /*
FC_END */
/* 534 */

                                0x11, 0x0,          /*
FC_RP */
/* 536 */ NdrFcShort( 0xffffffe0 ),     /* Offset= -
32 (504) */
/* 538 */

                                0x1b,               /*
FC_CARRAY */
                                0x3,                /*
3 */
/* 540 */ NdrFcShort( 0x4 ),    /* 4 */
/* 542 */ 0x19,                 /* Corr desc:  field
pointer, FC_ULONG */
                                0x0,                /*
*/
/* 544 */ NdrFcShort( 0x0 ),    /* 0 */
/* 546 */

                                0x4b,               /*
FC_PP */
                                0x5c,               /*
FC_PAD */
/* 548 */

                                0x48,               /*
FC_VARIABLE_REPEAT */
                                0x49,               /*
FC_FIXED_OFFSET */
/* 550 */ NdrFcShort( 0x4 ),    /* 4 */
/* 552 */ NdrFcShort( 0x0 ),    /* 0 */
/* 554 */ NdrFcShort( 0x1 ),    /* 1 */
/* 556 */ NdrFcShort( 0x0 ),    /* 0 */
/* 558 */ NdrFcShort( 0x0 ),    /* 0 */
/* 560 */ 0x12, 0x0,            /* FC_UP */
/* 562 */ NdrFcShort( 0x182 ),          /* Offset=
386 (948) */
/* 564 */

                                0x5b,               /*
FC_END */

                                0x8,                /*
FC_LONG */
/* 566 */ 0x5c,                 /* FC_PAD */
                                0x5b,               /*
FC_END */
/* 568 */

                                0x1a,               /*
FC_BOGUS_STRUCT */
                                0x3,                /*
3 */
/* 570 */ NdrFcShort( 0x8 ),    /* 8 */
/* 572 */ NdrFcShort( 0x0 ),    /* 0 */
/* 574 */ NdrFcShort( 0x6 ),    /* Offset= 6 (580) */
/* 576 */ 0x8,                  /* FC_LONG */
                                0x36,               /*
FC_POINTER */
/* 578 */ 0x5c,                 /* FC_PAD */
                                0x5b,               /*
FC_END */
/* 580 */

                                0x11, 0x0,          /*
FC_RP */
/* 582 */ NdrFcShort( 0xffffffd4 ),     /* Offset= -
44 (538) */
/* 584 */

                                0x2f,               /*
FC_IP */
                                0x5a,               /*
FC_CONSTANT_IID */
/* 586 */ NdrFcLong( 0x2f ),    /* 47 */
/* 590 */ NdrFcShort( 0x0 ),    /* 0 */
/* 592 */ NdrFcShort( 0x0 ),    /* 0 */
/* 594 */ 0xc0,                 /* 192 */
                                0x0,                /*
0 */
/* 596 */ 0x0,                  /* 0 */
```


©2005 Hewlett-Packard Company. All rights reserved.

```
                                0x0,                /*
0 */
/* 598 */ 0x0,                  /* 0 */
                                0x0,                /*
0 */
/* 600 */ 0x0,                  /* 0 */
                                0x46,               /*
70 */
/* 602 */
                                0x1b,               /*
FC_CARRAY */
                                0x0,                /*
0 */
/* 604 */ NdrFcShort( 0x1 ),  /* 1 */
/* 606 */ 0x19,                 /* Corr desc:  field
pointer, FC_ULONG */
                                0x0,                /*
*/
/* 608 */ NdrFcShort( 0x4 ),  /* 4 */
/* 610 */ 0x1,                  /* FC_BYTE */
                                0x5b,               /*
FC_END */
/* 612 */
                                0x1a,               /*
FC_BOGUS_STRUCT */
                                0x3,                /*
3 */
/* 614 */ NdrFcShort( 0x10 ), /* 16 */
/* 616 */ NdrFcShort( 0x0 ),  /* 0 */
/* 618 */ NdrFcShort( 0xa ),  /* Offset= 10 (628) */
/* 620 */ 0x8,                  /* FC_LONG */
                                0x8,                /*
FC_LONG */
/* 622 */ 0x4c,                 /* FC_EMBEDDED_COMPLEX
*/
                                0x0,                /*
0 */
/* 624 */ NdrFcShort( 0xffffffd8 ),     /* Offset= -
40 (584) */
/* 626 */ 0x36,                 /* FC_POINTER */
                                0x5b,               /*
FC_END */
/* 628 */
                                0x12, 0x0,          /*
FC_UP */
/* 630 */ NdrFcShort( 0xffffffe4 ),     /* Offset= -
28 (602) */
/* 632 */
                                0x1b,               /*
FC_CARRAY */
                                0x3,                /*
3 */
/* 634 */ NdrFcShort( 0x4 ),  /* 4 */
/* 636 */ 0x19,                 /* Corr desc:  field
pointer, FC_ULONG */
                                0x0,                /*
*/
/* 638 */ NdrFcShort( 0x0 ),  /* 0 */
/* 640 */
                                0x4b,               /*
FC_PP */
                                0x5c,               /*
FC_PAD */
/* 642 */
                                0x48,               /*
FC_VARIABLE_REPEAT */
                                0x49,               /*
FC_FIXED_OFFSET */
/* 644 */ NdrFcShort( 0x4 ),  /* 4 */
/* 646 */ NdrFcShort( 0x0 ),  /* 0 */
/* 648 */ NdrFcShort( 0x1 ),  /* 1 */
/* 650 */ NdrFcShort( 0x0 ),  /* 0 */
/* 652 */ NdrFcShort( 0x0 ),  /* 0 */
/* 654 */ 0x12, 0x0,            /* FC_UP */
/* 656 */ NdrFcShort( 0xffffffd4 ),     /* Offset= -
44 (612) */
/* 658 */
                                0x5b,               /*
FC_END */

                                0x8,                /*
FC_LONG */
/* 660 */ 0x5c,                 /* FC_PAD */
                                0x5b,               /*
FC_END */
/* 662 */
                                0x1a,               /*
FC_BOGUS_STRUCT */
                                0x3,                /*
3 */
/* 664 */ NdrFcShort( 0x8 ),  /* 8 */
/* 666 */ NdrFcShort( 0x0 ),  /* 0 */
/* 668 */ NdrFcShort( 0x6 ),  /* Offset= 6 (674) */
/* 670 */ 0x8,                  /* FC_LONG */
                                0x36,               /*
FC_POINTER */
/* 672 */ 0x5c,                 /* FC_PAD */
                                0x5b,               /*
FC_END */
/* 674 */
                                0x11, 0x0,          /*
FC_RP */
/* 676 */ NdrFcShort( 0xffffffd4 ),     /* Offset= -
44 (632) */
/* 678 */
                                0x1d,               /*
FC_SMFARRAY */
                                0x0,                /*
0 */
/* 680 */ NdrFcShort( 0x8 ),  /* 8 */
/* 682 */ 0x1,                  /* FC_BYTE */
                                0x5b,               /*
FC_END */
/* 684 */
                                0x15,               /*
FC_STRUCT */
                                0x3,                /*
3 */
/* 686 */ NdrFcShort( 0x10 ), /* 16 */
/* 688 */ 0x8,                  /* FC_LONG */
                                0x6,                /*
FC_SHORT */
/* 690 */ 0x6,                  /* FC_SHORT */
                                0x4c,               /*
FC_EMBEDDED_COMPLEX */
/* 692 */ 0x0,                  /* 0 */
                                NdrFcShort( 0xfffffff1
),        /* Offset= -15 (678) */
                                0x5b,               /*
FC_END */
/* 696 */
                                0x1a,               /*
FC_BOGUS_STRUCT */
                                0x3,                /*
3 */
/* 698 */ NdrFcShort( 0x18 ), /* 24 */
/* 700 */ NdrFcShort( 0x0 ),  /* 0 */
/* 702 */ NdrFcShort( 0xa ),  /* Offset= 10 (712) */
/* 704 */ 0x8,                  /* FC_LONG */
                                0x36,               /*
FC_POINTER */
/* 706 */ 0x4c,                 /* FC_EMBEDDED_COMPLEX
*/
                                0x0,                /*
0 */
/* 708 */ NdrFcShort( 0xffffffe8 ),     /* Offset= -
24 (684) */
/* 710 */ 0x5c,                 /* FC_PAD */
                                0x5b,               /*
FC_END */
/* 712 */
                                0x11, 0x0,          /*
FC_RP */
/* 714 */ NdrFcShort( 0xffffff0c ),     /* Offset= -
244 (470) */
/* 716 */
                                0x1b,               /*
FC_CARRAY */
                                0x0,                /*
0 */
/* 718 */ NdrFcShort( 0x1 ),  /* 1 */
/* 720 */ 0x19,                 /* Corr desc:  field
pointer, FC_ULONG */
                                0x0,                /*
*/
/* 722 */ NdrFcShort( 0x0 ),  /* 0 */
/* 724 */ 0x1,                  /* FC_BYTE */
                                0x5b,               /*
FC_END */
/* 726 */
                                0x16,               /*
FC_PSTRUCT */
                                0x3,                /*
3 */
/* 728 */ NdrFcShort( 0x8 ),  /* 8 */
/* 730 */
                                0x4b,               /*
FC_PP */
                                0x5c,               /*
FC_PAD */
/* 732 */
                                0x46,               /*
FC_NO_REPEAT */
                                0x5c,               /*
FC_PAD */
/* 734 */ NdrFcShort( 0x4 ),  /* 4 */
/* 736 */ NdrFcShort( 0x4 ),  /* 4 */
/* 738 */ 0x12, 0x0,            /* FC_UP */
```


©2005 Hewlett-Packard Company. All rights reserved.

```
/* 740 */ NdrFcShort( 0xffffffe8 ),     /* Offset= -
24 (716) */
/* 742 */
                                0x5b,               /*
FC_END */

                                0x8,                /*
FC_LONG */
/* 744 */ 0x8,                  /* FC_LONG */
                                0x5b,               /*
FC_END */
/* 746 */
                                0x1b,               /*
FC_CARRAY */
                                0x1,                /*
1 */
/* 748 */ NdrFcShort( 0x2 ),    /* 2 */
/* 750 */ 0x19,                 /* Corr desc:  field
pointer, FC_ULONG */
                                0x0,                /*
*/
/* 752 */ NdrFcShort( 0x0 ),    /* 0 */
/* 754 */ 0x6,                  /* FC_SHORT */
                                0x5b,               /*
FC_END */
/* 756 */
                                0x16,               /*
FC_PSTRUCT */
                                0x3,                /*
3 */
/* 758 */ NdrFcShort( 0x8 ),    /* 8 */
/* 760 */
                                0x4b,               /*
FC_PP */
                                0x5c,               /*
FC_PAD */
/* 762 */
                                0x46,               /*
FC_NO_REPEAT */
                                0x5c,               /*
FC_PAD */
/* 764 */ NdrFcShort( 0x4 ),    /* 4 */
/* 766 */ NdrFcShort( 0x4 ),    /* 4 */
/* 768 */ 0x12, 0x0,            /* FC_UP */
/* 770 */ NdrFcShort( 0xffffffe8 ),     /* Offset= -
24 (746) */
/* 772 */
                                0x5b,               /*
FC_END */

                                0x8,                /*
FC_LONG */
/* 774 */ 0x8,                  /* FC_LONG */
                                0x5b,               /*
FC_END */
/* 776 */
                                0x1b,               /*
FC_CARRAY */
                                0x3,                /*
3 */
/* 778 */ NdrFcShort( 0x4 ),    /* 4 */
/* 780 */ 0x19,                 /* Corr desc:  field
pointer, FC_ULONG */
                                0x0,                /*
*/
/* 782 */ NdrFcShort( 0x0 ),    /* 0 */
/* 784 */ 0x8,                  /* FC_LONG */
                                0x5b,               /*
FC_END */
/* 786 */
                                0x16,               /*
FC_PSTRUCT */
                                0x3,                /*
3 */
/* 788 */ NdrFcShort( 0x8 ),    /* 8 */
/* 790 */
                                0x4b,               /*
FC_PP */
                                0x5c,               /*
FC_PAD */
/* 792 */
                                0x46,               /*
FC_NO_REPEAT */
                                0x5c,               /*
FC_PAD */
/* 794 */ NdrFcShort( 0x4 ),    /* 4 */
/* 796 */ NdrFcShort( 0x4 ),    /* 4 */
/* 798 */ 0x12, 0x0,            /* FC_UP */
/* 800 */ NdrFcShort( 0xffffffe8 ),     /* Offset= -
24 (776) */
/* 802 */
                                0x5b,               /*
FC_END */

                                0x8,                /*
FC_LONG */
/* 804 */ 0x8,                  /* FC_LONG */
                                0x5b,               /*
FC_END */
/* 806 */
                                0x1b,               /*
FC_CARRAY */
                                0x7,                /*
7 */
/* 808 */ NdrFcShort( 0x8 ),    /* 8 */
/* 810 */ 0x19,                 /* Corr desc:  field
pointer, FC_ULONG */
                                0x0,                /*
*/
/* 812 */ NdrFcShort( 0x0 ),    /* 0 */
/* 814 */ 0xb,                  /* FC_HYPER */
                                0x5b,               /*
FC_END */
/* 816 */
                                0x16,               /*
FC_PSTRUCT */
                                0x3,                /*
3 */
/* 818 */ NdrFcShort( 0x8 ),    /* 8 */
/* 820 */
                                0x4b,               /*
FC_PP */
                                0x5c,               /*
FC_PAD */
/* 822 */
                                0x46,               /*
FC_NO_REPEAT */
                                0x5c,               /*
FC_PAD */
/* 824 */ NdrFcShort( 0x4 ),    /* 4 */
/* 826 */ NdrFcShort( 0x4 ),    /* 4 */
/* 828 */ 0x12, 0x0,            /* FC_UP */
/* 830 */ NdrFcShort( 0xffffffe8 ),     /* Offset= -
24 (806) */
/* 832 */
                                0x5b,               /*
FC_END */

                                0x8,                /*
FC_LONG */
/* 834 */ 0x8,                  /* FC_LONG */
                                0x5b,               /*
FC_END */
/* 836 */
                                0x15,               /*
FC_STRUCT */
                                0x3,                /*
3 */
/* 838 */ NdrFcShort( 0x8 ),    /* 8 */
/* 840 */ 0x8,                  /* FC_LONG */
                                0x8,                /*
FC_LONG */
/* 842 */ 0x5c,                 /* FC_PAD */
                                0x5b,               /*
FC_END */
/* 844 */
                                0x1b,               /*
FC_CARRAY */
                                0x3,                /*
3 */
/* 846 */ NdrFcShort( 0x8 ),    /* 8 */
/* 848 */ 0x7,                  /* Corr desc: FC_USHORT
*/
                                0x0,                /*
*/
/* 850 */ NdrFcShort( 0xffd8 ),         /* -40 */
/* 852 */ 0x4c,                 /* FC_EMBEDDED_COMPLEX
*/
                                0x0,                /*
0 */
/* 854 */ NdrFcShort( 0xffffffee ),     /* Offset= -
18 (836) */
/* 856 */ 0x5c,                 /* FC_PAD */
                                0x5b,               /*
FC_END */
/* 858 */
                                0x1a,               /*
FC_BOGUS_STRUCT */
                                0x3,                /*
3 */
/* 860 */ NdrFcShort( 0x28 ), /* 40 */
/* 862 */ NdrFcShort( 0xffffffee ),     /* Offset= -
18 (844) */
/* 864 */ NdrFcShort( 0x0 ),    /* Offset= 0 (864) */
/* 866 */ 0x6,                  /* FC_SHORT */
                                0x6,                /*
FC_SHORT */
/* 868 */ 0x38,                 /* FC_ALIGNM4 */
```


©2005 Hewlett-Packard Company. All rights reserved.

```
                                0x8,                /*
FC_LONG */
/* 870 */ 0x8,                  /* FC_LONG */
                                0x4c,               /*
FC_EMBEDDED_COMPLEX */
/* 872 */ 0x0,                  /* 0 */
                                NdrFcShort( 0xfffffdf7
),        /* Offset= -521 (352) */
                                0x5b,               /*
FC_END */
/* 876 */
                                0x12, 0x0,          /*
FC_UP */
/* 878 */ NdrFcShort( 0xffffef6 ),     /* Offset= -
266 (612) */
/* 880 */
                                0x12, 0x8,          /*
FC_UP [simple_pointer] */
/* 882 */ 0x1,                  /* FC_BYTE */
                                0x5c,               /*
FC_PAD */
/* 884 */
                                0x12, 0x8,          /*
FC_UP [simple_pointer] */
/* 886 */ 0x6,                  /* FC_SHORT */
                                0x5c,               /*
FC_PAD */
/* 888 */
                                0x12, 0x8,          /*
FC_UP [simple_pointer] */
/* 890 */ 0x8,                  /* FC_LONG */
                                0x5c,               /*
FC_PAD */
/* 892 */
                                0x12, 0x8,          /*
FC_UP [simple_pointer] */
/* 894 */ 0xa,                  /* FC_FLOAT */
                                0x5c,               /*
FC_PAD */
/* 896 */
                                0x12, 0x8,          /*
FC_UP [simple_pointer] */
/* 898 */ 0xc,                  /* FC_DOUBLE */
                                0x5c,               /*
FC_PAD */
/* 900 */
                                0x12, 0x0,          /*
FC_UP */
/* 902 */ NdrFcShort( 0xfffffd90 ),     /* Offset= -
624 (278) */
/* 904 */
                                0x12, 0x10,         /*
FC_UP [pointer_deref] */
/* 906 */ NdrFcShort( 0xfffffd92 ),     /* Offset= -
622 (284) */
/* 908 */
                                0x12, 0x10,         /*
FC_UP [pointer_deref] */
/* 910 */ NdrFcShort( 0xfffffda6 ),     /* Offset= -
602 (308) */
/* 912 */
                                0x12, 0x10,         /*
FC_UP [pointer_deref] */
/* 914 */ NdrFcShort( 0xfffffdb4 ),     /* Offset= -
588 (326) */
/* 916 */
                                0x12, 0x10,         /*
FC_UP [pointer_deref] */
/* 918 */ NdrFcShort( 0xfffffdc2 ),     /* Offset= -
574 (344) */
/* 920 */
                                0x12, 0x10,         /*
FC_UP [pointer_deref] */
/* 922 */ NdrFcShort( 0x2 ),  /* Offset= 2 (924) */
/* 924 */
                                0x12, 0x0,          /*
FC_UP */
/* 926 */ NdrFcShort( 0x16 ), /* Offset= 22 (948) */
/* 928 */
                                0x15,               /*
FC_STRUCT */
                                0x7,                /*
7 */
/* 930 */ NdrFcShort( 0x10 ), /* 16 */
/* 932 */ 0x6,                  /* FC_SHORT */
                                0x1,                /*
FC_BYTE */
/* 934 */ 0x1,                  /* FC_BYTE */
                                0x38,               /*
FC_ALIGNM4 */
/* 936 */ 0x8,                  /* FC_LONG */
                                0x39,               /*
FC_ALIGNM8 */
/* 938 */ 0xb,                  /* FC_HYPER */
                                0x5b,               /*
FC_END */
/* 940 */
                                0x12, 0x0,          /*
FC_UP */
/* 942 */ NdrFcShort( 0xfffffff2 ),     /* Offset= -
14 (928) */
/* 944 */
                                0x12, 0x8,          /*
FC_UP [simple_pointer] */
/* 946 */ 0x2,                  /* FC_CHAR */
                                0x5c,               /*
FC_PAD */
/* 948 */
                                0x1a,               /*
FC_BOGUS_STRUCT */
                                0x7,                /*
7 */
/* 950 */ NdrFcShort( 0x20 ), /* 32 */
/* 952 */ NdrFcShort( 0x0 ),  /* 0 */
/* 954 */ NdrFcShort( 0x0 ),  /* Offset= 0 (954) */
/* 956 */ 0x8,                  /* FC_LONG */
                                0x8,                /*
FC_LONG */
/* 958 */ 0x6,                  /* FC_SHORT */
                                0x6,                /*
FC_SHORT */
/* 960 */ 0x6,                  /* FC_SHORT */
                                0x6,                /*
FC_SHORT */
/* 962 */ 0x4c,                 /* FC_EMBEDDED_COMPLEX
*/
                                0x0,                /*
0 */
/* 964 */ NdrFcShort( 0xfffffc42 ),     /* Offset= -
958 (6) */
/* 966 */ 0x5c,                 /* FC_PAD */
                                0x5b,               /*
FC_END */
/* 968 */ 0xb4,                 /* FC_USER_MARSHAL */
                                0x83,               /*
131 */
/* 970 */ NdrFcShort( 0x0 ),  /* 0 */
/* 972 */ NdrFcShort( 0x10 ), /* 16 */
/* 974 */ NdrFcShort( 0x0 ),  /* 0 */
/* 976 */ NdrFcShort( 0xfffffc32 ),     /* Offset= -
974 (2) */
/* 978 */
                                0x11, 0x4,          /*
FC_RP [alloced_on_stack] */
/* 980 */ NdrFcShort( 0x6 ),  /* Offset= 6 (986) */
/* 982 */
                                0x13, 0x0,          /*
FC_OP */
/* 984 */ NdrFcShort( 0xffffffdc ),     /* Offset= -
36 (948) */
/* 986 */ 0xb4,                 /* FC_USER_MARSHAL */
                                0x83,               /*
131 */
/* 988 */ NdrFcShort( 0x0 ),  /* 0 */
/* 990 */ NdrFcShort( 0x10 ), /* 16 */
/* 992 */ NdrFcShort( 0x0 ),  /* 0 */
/* 994 */ NdrFcShort( 0xfffffff4 ),     /* Offset= -
12 (982) */

                                0x0
        }
    };

const CInterfaceProxyVtbl *
_tpcc_com_ps_ProxyVtblList[] =
{
    ( CInterfaceProxyVtbl *) &_ITPCCProxyVtbl,
    0
};

const CInterfaceStubVtbl *
_tpcc_com_ps_StubVtblList[] =
{
    ( CInterfaceStubVtbl *) &_ITPCCStubVtbl,
    0
};

PCInterfaceName const
_tpcc_com_ps_InterfaceNamesList[] =
{
    "ITPCC",
    0
};


#define _tpcc_com_ps_CHECK_IID(n)
          IID_GENERIC_CHECK_IID( _tpcc_com_ps, pIID,
n)
```


©2005 Hewlett-Packard Company. All rights reserved.

```
int __stdcall _tpcc_com_ps_IID_Lookup( const IID *
pIID, int * pIndex )
{

    if(!_tpcc_com_ps_CHECK_IID(0))
        {
        *pIndex = 0;
        return 1;
        }

    return 0;
}

const ExtendedProxyFileInfo tpcc_com_ps_ProxyFileInfo
=
{
    (PCInterfaceProxyVtblList *) &
_tpcc_com_ps_ProxyVtblList,
    (PCInterfaceStubVtblList *) &
_tpcc_com_ps_StubVtblList,
    (const PCInterfaceName * ) &
_tpcc_com_ps_InterfaceNamesList,
    0, // no delegation
    & _tpcc_com_ps_IID_Lookup,
    1,
    2,
    0, /* table of [async_uuid] interfaces */
    0, /* Filler1 */
    0, /* Filler2 */
    0  /* Filler3 */
};


#endif /* !defined(_M_IA64) && !defined(_M_AXP64)*/


#pragma warning( disable: 4049 )  /* more than 64k
source lines */

/* this ALWAYS GENERATED file contains the proxy stub
code */


 /* File created by MIDL compiler version 5.03.0280
*/
/* at Thu Dec 13 23:13:08 2001
 */
/* Compiler settings for .\src\tpcc_com_ps.idl:
    Oicf (OptLev=i2), W1, Zp8, env=Win64 (32b
run,appending), ms_ext, c_ext, robust
    error checks: allocation ref bounds_check enum
stub_data
    VC __declspec() decoration level:
         __declspec(uuid()), __declspec(selectany),
__declspec(novtable)
         DECLSPEC_UUID(), MIDL_INTERFACE()
*/
//@@MIDL_FILE_HEADING(  )

#if defined(_M_IA64) || defined(_M_AXP64)
#define USE_STUBLESS_PROXY

/* verify that the <rpcproxy.h> version is high
enough to compile this file*/
#ifndef __REDQ_RPCPROXY_H_VERSION__
#define __REQUIRED_RPCPROXY_H_VERSION__ 475
#endif


#include "rpcproxy.h"
#ifndef __RPCPROXY_H_VERSION__
#error this stub requires an updated version of
<rpcproxy.h>
#endif // __RPCPROXY_H_VERSION__


#include "tpcc_com_ps.h"

#define TYPE_FORMAT_STRING_SIZE   979
#define PROC_FORMAT_STRING_SIZE   253
#define TRANSMIT_AS_TABLE_SIZE    0
#define WIRE_MARSHAL_TABLE_SIZE   1

typedef struct _MIDL_TYPE_FORMAT_STRING
    {
    short          Pad;
    unsigned char  Format[ TYPE_FORMAT_STRING_SIZE ];
    } MIDL_TYPE_FORMAT_STRING;

typedef struct _MIDL_PROC_FORMAT_STRING
    {
    short          Pad;
    unsigned char  Format[ PROC_FORMAT_STRING_SIZE ];
    } MIDL_PROC_FORMAT_STRING;


extern const MIDL_TYPE_FORMAT_STRING
__MIDL_TypeFormatString;
extern const MIDL_PROC_FORMAT_STRING
__MIDL_ProcFormatString;


/* Standard interface: __MIDL_itf_tpcc_com_ps_0000,
ver. 0.0,

GUID={0x00000000,0x0000,0x0000,{0x00,0x00,0x00,0x00,0
x00,0x00,0x00,0x00}} */


/* Object interface: IUnknown, ver. 0.0,

GUID={0x00000000,0x0000,0x0000,{0xC0,0x00,0x00,0x00,0
x00,0x00,0x00,0x46}} */


/* Object interface: ITPCC, ver. 0.0,

GUID={0xFEEE6AA2,0x84B1,0x11d2,{0xBA,0x47,0x00,0xC0,0
x4F,0xBF,0xE0,0x8B}} */


extern const MIDL_STUB_DESC Object_StubDesc;


extern const MIDL_SERVER_INFO ITPCC_ServerInfo;

#pragma code_seg(".orpc")
static const unsigned short
ITPCC_FormatStringOffsetTable[] =
    {
    0,
    44,
    88,
    132,
    176,
    220
    };

static const MIDL_SERVER_INFO ITPCC_ServerInfo =
    {
    &Object_StubDesc,
    0,
    __MIDL_ProcFormatString.Format,
    &ITPCC_FormatStringOffsetTable[-3],
    0,
    0,
    0,
    0
    };

static const MIDL_STUBLESS_PROXY_INFO ITPCC_ProxyInfo
=
    {
    &Object_StubDesc,
    __MIDL_ProcFormatString.Format,
    &ITPCC_FormatStringOffsetTable[-3],
    0,
    0,
    0
    };

CINTERFACE_PROXY_VTABLE(9) _ITPCCProxyVtbl =
{
    &ITPCC_ProxyInfo,
    &IID_ITPCC,
    IUnknown_QueryInterface_Proxy,
    IUnknown_AddRef_Proxy,
    IUnknown_Release_Proxy ,
    (void *)-1 /* ITPCC::NewOrder */ ,
    (void *)-1 /* ITPCC::Payment */ ,
    (void *)-1 /* ITPCC::Delivery */ ,
    (void *)-1 /* ITPCC::StockLevel */ ,
    (void *)-1 /* ITPCC::OrderStatus */ ,
    (void *)-1 /* ITPCC::CallSetComplete */
};

const CInterfaceStubVtbl _ITPCCStubVtbl =
{
    &IID_ITPCC,
    &ITPCC_ServerInfo,
    9,
    0, /* pure interpreted */
    CStdStubBuffer_METHODS
};

extern const USER_MARSHAL_ROUTINE_QUADRUPLE
UserMarshalRoutines[ WIRE_MARSHAL_TABLE_SIZE ];
```


©2005 Hewlett-Packard Company. All rights reserved.

```
static const MIDL_STUB_DESC Object_StubDesc =
    {
    0,
    NdrOleAllocate,
    NdrOleFree,
    0,
    0,
    0,
    0,
    0,
    __MIDL_TypeFormatString.Format,
    1, /* -error bounds_check flag */
    0x50002, /* Ndr library version */
    0,
    0x5030118, /* MIDL Version 5.3.280 */
    0,
    UserMarshalRoutines,
    0,  /* notify & notify_flag routine table */
    0x1, /* MIDL flag */
    0,  /* Reserved3 */
    0,  /* Reserved4 */
    0   /* Reserved5 */
    };

#pragma data_seg(".rdata")

static const USER_MARSHAL_ROUTINE_QUADRUPLE
UserMarshalRoutines[ WIRE_MARSHAL_TABLE_SIZE ] =
        {

            {
            VARIANT_UserSize
            ,VARIANT_UserMarshal
            ,VARIANT_UserUnmarshal
            ,VARIANT_UserFree
            }

        };


#if !defined(__RPC_WIN64__)
#error  Invalid build platform for this stub.
#endif

static const MIDL_PROC_FORMAT_STRING
__MIDL_ProcFormatString =
    {
        0,
        {

          /* Procedure NewOrder */

                                0x33,               /*
FC_AUTO_HANDLE */
                                0x6c,               /*
Old Flags:  object, Oi2 */
/*  2 */  NdrFcLong( 0x0 ),   /* 0 */
/*  6 */  NdrFcShort( 0x3 ),  /* 3 */
#ifndef _ALPHA_
/*  8 */  NdrFcShort( 0x38 ), /* ia64 Stack
size/offset = 56 */
#else
                                NdrFcShort( 0x30 ), /*
axp64 Stack size/offset = 48 */
#endif
/* 10 */  NdrFcShort( 0x0 ),  /* 0 */
/* 12 */  NdrFcShort( 0x8 ),  /* 8 */
/* 14 */  0x47,               /* Oi2 Flags:  srv must
size, clt must size, has return, has ext, */
                                0x3,                /*
3 */
/* 16 */  0xa,                /* 10 */
                                0x7,                /*
Ext Flags:  new corr desc, clt corr check, srv corr
check, */
/* 18 */  NdrFcShort( 0x20 ), /* 32 */
/* 20 */  NdrFcShort( 0x20 ), /* 32 */
/* 22 */  NdrFcShort( 0x0 ),  /* 0 */
/* 24 */  NdrFcShort( 0x0 ),  /* 0 */

          /* Parameter txn_in */

/* 26 */  NdrFcShort( 0x8b ), /* Flags:  must size,
must free, in, by val, */
#ifndef _ALPHA_
/* 28 */  NdrFcShort( 0x10 ), /* ia64 Stack
size/offset = 16 */
#else
                                NdrFcShort( 0x8 ),  /*
axp64 Stack size/offset = 8 */
#endif
/* 30 */  NdrFcShort( 0x3b6 ),          /* Type
Offset=950 */

          /* Parameter txn_out */

/* 32 */  NdrFcShort( 0x6113 ),         /* Flags:
must size, must free, out, simple ref, srv alloc
size=24 */
#ifndef _ALPHA_
/* 34 */  NdrFcShort( 0x28 ), /* ia64 Stack
size/offset = 40 */
#else
                                NdrFcShort( 0x20 ), /*
axp64 Stack size/offset = 32 */
#endif
/* 36 */  NdrFcShort( 0x3c8 ),          /* Type
Offset=968 */

          /* Return value */

/* 38 */  NdrFcShort( 0x70 ), /* Flags:  out, return,
base type, */
#ifndef _ALPHA_
/* 40 */  NdrFcShort( 0x30 ), /* ia64 Stack
size/offset = 48 */
#else
                                NdrFcShort( 0x28 ), /*
axp64 Stack size/offset = 40 */
#endif
/* 42 */  0x8,                /* FC_LONG */
                                0x0,                /*
0 */

          /* Procedure Payment */

/* 44 */  0x33,               /* FC_AUTO_HANDLE */
                                0x6c,               /*
Old Flags:  object, Oi2 */
/* 46 */  NdrFcLong( 0x0 ),   /* 0 */
/* 50 */  NdrFcShort( 0x4 ),  /* 4 */
#ifndef _ALPHA_
/* 52 */  NdrFcShort( 0x38 ), /* ia64 Stack
size/offset = 56 */
#else
                                NdrFcShort( 0x30 ), /*
axp64 Stack size/offset = 48 */
#endif
/* 54 */  NdrFcShort( 0x0 ),  /* 0 */
/* 56 */  NdrFcShort( 0x8 ),  /* 8 */
/* 58 */  0x47,               /* Oi2 Flags:  srv must
size, clt must size, has return, has ext, */
                                0x3,                /*
3 */
/* 60 */  0xa,                /* 10 */
                                0x7,                /*
Ext Flags:  new corr desc, clt corr check, srv corr
check, */
/* 62 */  NdrFcShort( 0x20 ), /* 32 */
/* 64 */  NdrFcShort( 0x20 ), /* 32 */
/* 66 */  NdrFcShort( 0x0 ),  /* 0 */
/* 68 */  NdrFcShort( 0x0 ),  /* 0 */

          /* Parameter txn_in */

/* 70 */  NdrFcShort( 0x8b ), /* Flags:  must size,
must free, in, by val, */
#ifndef _ALPHA_
/* 72 */  NdrFcShort( 0x10 ), /* ia64 Stack
size/offset = 16 */
#else
                                NdrFcShort( 0x8 ),  /*
axp64 Stack size/offset = 8 */
#endif
/* 74 */  NdrFcShort( 0x3b6 ),          /* Type
Offset=950 */

          /* Parameter txn_out */

/* 76 */  NdrFcShort( 0x6113 ),         /* Flags:
must size, must free, out, simple ref, srv alloc
size=24 */
#ifndef _ALPHA_
/* 78 */  NdrFcShort( 0x28 ), /* ia64 Stack
size/offset = 40 */
#else
                                NdrFcShort( 0x20 ), /*
axp64 Stack size/offset = 32 */
#endif
/* 80 */  NdrFcShort( 0x3c8 ),          /* Type
Offset=968 */

          /* Return value */

/* 82 */  NdrFcShort( 0x70 ), /* Flags:  out, return,
base type, */
#ifndef _ALPHA_
```


©2005 Hewlett-Packard Company. All rights reserved.

```
/* 84 */  NdrFcShort( 0x30 ), /* ia64 Stack
size/offset = 48 */
#else
                                NdrFcShort( 0x28 ), /*
axp64 Stack size/offset = 40 */
#endif
/* 86 */  0x8,                  /* FC_LONG */
                                0x0,                /*
0 */

          /* Procedure Delivery */

/* 88 */  0x33,                 /* FC_AUTO_HANDLE */
                                0x6c,               /*
Old Flags:  object, Oi2 */
/* 90 */  NdrFcLong( 0x0 ),     /* 0 */
/* 94 */  NdrFcShort( 0x5 ),    /* 5 */
#ifndef _ALPHA_
/* 96 */  NdrFcShort( 0x38 ), /* ia64 Stack
size/offset = 56 */
#else
                                NdrFcShort( 0x30 ), /*
axp64 Stack size/offset = 48 */
#endif
/* 98 */  NdrFcShort( 0x0 ),    /* 0 */
/* 100 */ NdrFcShort( 0x8 ),    /* 8 */
/* 102 */ 0x47,                 /* Oi2 Flags:  srv must
size, clt must size, has return, has ext, */
                                0x3,                /*
3 */
/* 104 */ 0xa,                  /* 10 */
                                0x7,                /*
Ext Flags:  new corr desc, clt corr check, srv corr
check, */
/* 106 */ NdrFcShort( 0x20 ), /* 32 */
/* 108 */ NdrFcShort( 0x20 ), /* 32 */
/* 110 */ NdrFcShort( 0x0 ),    /* 0 */
/* 112 */ NdrFcShort( 0x0 ),    /* 0 */

          /* Parameter txn_in */

/* 114 */ NdrFcShort( 0x8b ), /* Flags:  must size,
must free, in, by val, */
#ifndef _ALPHA_
/* 116 */ NdrFcShort( 0x10 ), /* ia64 Stack
size/offset = 16 */
#else
                                NdrFcShort( 0x8 ),  /*
axp64 Stack size/offset = 8 */
#endif
/* 118 */ NdrFcShort( 0x3b6 ),          /* Type
Offset=950 */

          /* Parameter txn_out */

/* 120 */ NdrFcShort( 0x6113 ),         /* Flags:
must size, must free, out, simple ref, srv alloc
size=24 */
#ifndef _ALPHA_
/* 122 */ NdrFcShort( 0x28 ), /* ia64 Stack
size/offset = 40 */
#else
                                NdrFcShort( 0x20 ), /*
axp64 Stack size/offset = 32 */
#endif
/* 124 */ NdrFcShort( 0x3c8 ),          /* Type
Offset=968 */

          /* Return value */

/* 126 */ NdrFcShort( 0x70 ), /* Flags:  out, return,
base type, */
#ifndef _ALPHA_
/* 128 */ NdrFcShort( 0x30 ), /* ia64 Stack
size/offset = 48 */
#else
                                NdrFcShort( 0x28 ), /*
axp64 Stack size/offset = 40 */
#endif
/* 130 */ 0x8,                  /* FC_LONG */
                                0x0,                /*
0 */

          /* Procedure StockLevel */

/* 132 */ 0x33,                 /* FC_AUTO_HANDLE */
                                0x6c,               /*
Old Flags:  object, Oi2 */
/* 134 */ NdrFcLong( 0x0 ),     /* 0 */
/* 138 */ NdrFcShort( 0x6 ),    /* 6 */
#ifndef _ALPHA_
/* 140 */ NdrFcShort( 0x38 ), /* ia64 Stack
size/offset = 56 */
#else
                                NdrFcShort( 0x30 ), /*
axp64 Stack size/offset = 48 */
#endif
/* 142 */ NdrFcShort( 0x0 ),    /* 0 */
/* 144 */ NdrFcShort( 0x8 ),    /* 8 */
/* 146 */ 0x47,                 /* Oi2 Flags:  srv must
size, clt must size, has return, has ext, */
                                0x3,                /*
3 */
/* 148 */ 0xa,                  /* 10 */
                                0x7,                /*
Ext Flags:  new corr desc, clt corr check, srv corr
check, */
/* 150 */ NdrFcShort( 0x20 ), /* 32 */
/* 152 */ NdrFcShort( 0x20 ), /* 32 */
/* 154 */ NdrFcShort( 0x0 ),    /* 0 */
/* 156 */ NdrFcShort( 0x0 ),    /* 0 */

          /* Parameter txn_in */

/* 158 */ NdrFcShort( 0x8b ), /* Flags:  must size,
must free, in, by val, */
#ifndef _ALPHA_
/* 160 */ NdrFcShort( 0x10 ), /* ia64 Stack
size/offset = 16 */
#else
                                NdrFcShort( 0x8 ),  /*
axp64 Stack size/offset = 8 */
#endif
/* 162 */ NdrFcShort( 0x3b6 ),          /* Type
Offset=950 */

          /* Parameter txn_out */

/* 164 */ NdrFcShort( 0x6113 ),         /* Flags:
must size, must free, out, simple ref, srv alloc
size=24 */
#ifndef _ALPHA_
/* 166 */ NdrFcShort( 0x28 ), /* ia64 Stack
size/offset = 40 */
#else
                                NdrFcShort( 0x20 ), /*
axp64 Stack size/offset = 32 */
#endif
/* 168 */ NdrFcShort( 0x3c8 ),          /* Type
Offset=968 */

          /* Return value */

/* 170 */ NdrFcShort( 0x70 ), /* Flags:  out, return,
base type, */
#ifndef _ALPHA_
/* 172 */ NdrFcShort( 0x30 ), /* ia64 Stack
size/offset = 48 */
#else
                                NdrFcShort( 0x28 ), /*
axp64 Stack size/offset = 40 */
#endif
/* 174 */ 0x8,                  /* FC_LONG */
                                0x0,                /*
0 */

          /* Procedure OrderStatus */

/* 176 */ 0x33,                 /* FC_AUTO_HANDLE */
                                0x6c,               /*
Old Flags:  object, Oi2 */
/* 178 */ NdrFcLong( 0x0 ),     /* 0 */
/* 182 */ NdrFcShort( 0x7 ),    /* 7 */
#ifndef _ALPHA_
/* 184 */ NdrFcShort( 0x38 ), /* ia64 Stack
size/offset = 56 */
#else
                                NdrFcShort( 0x30 ), /*
axp64 Stack size/offset = 48 */
#endif
/* 186 */ NdrFcShort( 0x0 ),    /* 0 */
/* 188 */ NdrFcShort( 0x8 ),    /* 8 */
/* 190 */ 0x47,                 /* Oi2 Flags:  srv must
size, clt must size, has return, has ext, */
                                0x3,                /*
3 */
/* 192 */ 0xa,                  /* 10 */
                                0x7,                /*
Ext Flags:  new corr desc, clt corr check, srv corr
check, */
/* 194 */ NdrFcShort( 0x20 ), /* 32 */
/* 196 */ NdrFcShort( 0x20 ), /* 32 */
/* 198 */ NdrFcShort( 0x0 ),    /* 0 */
/* 200 */ NdrFcShort( 0x0 ),    /* 0 */

          /* Parameter txn_in */
```


©2005 Hewlett-Packard Company. All rights reserved.

```
/* 202 */ NdrFcShort( 0x8b ), /* Flags:  must size,
must free, in, by val, */
#ifndef _ALPHA_
/* 204 */ NdrFcShort( 0x10 ), /* ia64 Stack
size/offset = 16 */
#else
                                NdrFcShort( 0x8 ),  /*
axp64 Stack size/offset = 8 */
#endif
/* 206 */ NdrFcShort( 0x3b6 ),          /* Type
Offset=950 */

          /* Parameter txn_out */

/* 208 */ NdrFcShort( 0x6113 ),         /* Flags:
must size, must free, out, simple ref, srv alloc
size=24 */
#ifndef _ALPHA_
/* 210 */ NdrFcShort( 0x28 ), /* ia64 Stack
size/offset = 40 */
#else
                                NdrFcShort( 0x20 ), /*
axp64 Stack size/offset = 32 */
#endif
/* 212 */ NdrFcShort( 0x3c8 ),          /* Type
Offset=968 */

          /* Return value */

/* 214 */ NdrFcShort( 0x70 ), /* Flags:  out, return,
base type, */
#ifndef _ALPHA_
/* 216 */ NdrFcShort( 0x30 ), /* ia64 Stack
size/offset = 48 */
#else
                                NdrFcShort( 0x28 ), /*
axp64 Stack size/offset = 40 */
#endif
/* 218 */ 0x8,                  /* FC_LONG */
                                0x0,                /*
0 */

          /* Procedure CallSetComplete */

/* 220 */ 0x33,                 /* FC_AUTO_HANDLE */
                                0x6c,               /*
Old Flags:  object, Oi2 */
/* 222 */ NdrFcLong( 0x0 ),    /* 0 */
/* 226 */ NdrFcShort( 0x8 ),   /* 8 */
/* 228 */ NdrFcShort( 0x10 ), /* ia64, axp64 Stack
size/offset = 16 */
/* 230 */ NdrFcShort( 0x0 ),   /* 0 */
/* 232 */ NdrFcShort( 0x8 ),   /* 8 */
/* 234 */ 0x44,                 /* Oi2 Flags:  has
return, has ext, */
                                0x1,                /*
1 */
/* 236 */ 0xa,                  /* 10 */
                                0x1,                /*
Ext Flags:  new corr desc, */
/* 238 */ NdrFcShort( 0x0 ),   /* 0 */
/* 240 */ NdrFcShort( 0x0 ),   /* 0 */
/* 242 */ NdrFcShort( 0x0 ),   /* 0 */
/* 244 */ NdrFcShort( 0x0 ),   /* 0 */

          /* Return value */

/* 246 */ NdrFcShort( 0x70 ), /* Flags:  out, return,
base type, */
/* 248 */ NdrFcShort( 0x8 ),   /* ia64, axp64 Stack
size/offset = 8 */
/* 250 */ 0x8,                  /* FC_LONG */
                                0x0,                /*
0 */

                                0x0
        }
    };

static const MIDL_TYPE_FORMAT_STRING
__MIDL_TypeFormatString =
    {
        0,
        {
                                NdrFcShort( 0x0 ),  /*
0 */
/*  2 */
                                0x12, 0x0,          /*
FC_UP */
/*  4 */  NdrFcShort( 0x39e ),          /* Offset=
926 (930) */
/*  6 */
                                0x2b,               /*
FC_NON_ENCAPSULATED_UNION */
                                0x9,                /*
FC_ULONG */
/*  8 */  0x7,                  /* Corr desc: FC_USHORT
*/
                                0x0,                /*
*/
/* 10 */  NdrFcShort( 0xfff8 ),         /* -8 */
/* 12 */  NdrFcShort( 0x1 ),  /* Corr flags:  early,
*/
/* 14 */  NdrFcShort( 0x2 ),  /* Offset= 2 (16) */
/* 16 */  NdrFcShort( 0x10 ), /* 16 */
/* 18 */  NdrFcShort( 0x2b ), /* 43 */
/* 20 */  NdrFcLong( 0x3 ),   /* 3 */
/* 24 */  NdrFcShort( 0x8008 ),         /* Simple arm
type: FC_LONG */
/* 26 */  NdrFcLong( 0x11 ),  /* 17 */
/* 30 */  NdrFcShort( 0x8001 ),         /* Simple arm
type: FC_BYTE */
/* 32 */  NdrFcLong( 0x2 ),   /* 2 */
/* 36 */  NdrFcShort( 0x8006 ),         /* Simple arm
type: FC_SHORT */
/* 38 */  NdrFcLong( 0x4 ),   /* 4 */
/* 42 */  NdrFcShort( 0x800a ),         /* Simple arm
type: FC_FLOAT */
/* 44 */  NdrFcLong( 0x5 ),   /* 5 */
/* 48 */  NdrFcShort( 0x800c ),         /* Simple arm
type: FC_DOUBLE */
/* 50 */  NdrFcLong( 0xb ),   /* 11 */
/* 54 */  NdrFcShort( 0x8006 ),         /* Simple arm
type: FC_SHORT */
/* 56 */  NdrFcLong( 0xa ),   /* 10 */
/* 60 */  NdrFcShort( 0x8008 ),         /* Simple arm
type: FC_LONG */
/* 62 */  NdrFcLong( 0x6 ),   /* 6 */
/* 66 */  NdrFcShort( 0xd6 ), /* Offset= 214 (280) */
/* 68 */  NdrFcLong( 0x7 ),   /* 7 */
/* 72 */  NdrFcShort( 0x800c ),         /* Simple arm
type: FC_DOUBLE */
/* 74 */  NdrFcLong( 0x8 ),   /* 8 */
/* 78 */  NdrFcShort( 0xd0 ), /* Offset= 208 (286) */
/* 80 */  NdrFcLong( 0xd ),   /* 13 */
/* 84 */  NdrFcShort( 0xe4 ), /* Offset= 228 (312) */
/* 86 */  NdrFcLong( 0x9 ),   /* 9 */
/* 90 */  NdrFcShort( 0xf0 ), /* Offset= 240 (330) */
/* 92 */  NdrFcLong( 0x2000 ),          /* 8192 */
/* 96 */  NdrFcShort( 0xfc ), /* Offset= 252 (348) */
/* 98 */  NdrFcLong( 0x24 ),  /* 36 */
/* 102 */ NdrFcShort( 0x2f4 ),          /* Offset=
756 (858) */
/* 104 */ NdrFcLong( 0x4024 ),          /* 16420 */
/* 108 */ NdrFcShort( 0x2ee ),          /* Offset=
750 (858) */
/* 110 */ NdrFcLong( 0x4011 ),          /* 16401 */
/* 114 */ NdrFcShort( 0x2ec ),          /* Offset=
748 (862) */
/* 116 */ NdrFcLong( 0x4002 ),          /* 16386 */
/* 120 */ NdrFcShort( 0x2ea ),          /* Offset=
746 (866) */
/* 122 */ NdrFcLong( 0x4003 ),          /* 16387 */
/* 126 */ NdrFcShort( 0x2e8 ),          /* Offset=
744 (870) */
/* 128 */ NdrFcLong( 0x4004 ),          /* 16388 */
/* 132 */ NdrFcShort( 0x2e6 ),          /* Offset=
742 (874) */
/* 134 */ NdrFcLong( 0x4005 ),          /* 16389 */
/* 138 */ NdrFcShort( 0x2e4 ),          /* Offset=
740 (878) */
/* 140 */ NdrFcLong( 0x400b ),          /* 16395 */
/* 144 */ NdrFcShort( 0x2d2 ),          /* Offset=
722 (866) */
/* 146 */ NdrFcLong( 0x400a ),          /* 16394 */
/* 150 */ NdrFcShort( 0x2d0 ),          /* Offset=
720 (870) */
/* 152 */ NdrFcLong( 0x4006 ),          /* 16390 */
/* 156 */ NdrFcShort( 0x2d6 ),          /* Offset=
726 (882) */
/* 158 */ NdrFcLong( 0x4007 ),          /* 16391 */
/* 162 */ NdrFcShort( 0x2cc ),          /* Offset=
716 (878) */
/* 164 */ NdrFcLong( 0x4008 ),          /* 16392 */
/* 168 */ NdrFcShort( 0x2ce ),          /* Offset=
718 (886) */
/* 170 */ NdrFcLong( 0x400d ),          /* 16397 */
/* 174 */ NdrFcShort( 0x2cc ),          /* Offset=
716 (890) */
/* 176 */ NdrFcLong( 0x4009 ),          /* 16393 */
/* 180 */ NdrFcShort( 0x2ca ),          /* Offset=
714 (894) */
/* 182 */ NdrFcLong( 0x6000 ),          /* 24576 */
/* 186 */ NdrFcShort( 0x2c8 ),          /* Offset=
712 (898) */
/* 188 */ NdrFcLong( 0x400c ),          /* 16396 */
/* 192 */ NdrFcShort( 0x2c6 ),          /* Offset=
710 (902) */
```


©2005 Hewlett-Packard Company. All rights reserved.

```
/* 194 */ NdrFcLong( 0x10 ),  /* 16 */
/* 198 */ NdrFcShort( 0x8002 ),         /* Simple arm
type: FC_CHAR */
/* 200 */ NdrFcLong( 0x12 ),  /* 18 */
/* 204 */ NdrFcShort( 0x8006 ),         /* Simple arm
type: FC_SHORT */
/* 206 */ NdrFcLong( 0x13 ),  /* 19 */
/* 210 */ NdrFcShort( 0x8008 ),         /* Simple arm
type: FC_LONG */
/* 212 */ NdrFcLong( 0x16 ),  /* 22 */
/* 216 */ NdrFcShort( 0x8008 ),         /* Simple arm
type: FC_LONG */
/* 218 */ NdrFcLong( 0x17 ),  /* 23 */
/* 222 */ NdrFcShort( 0x8008 ),         /* Simple arm
type: FC_LONG */
/* 224 */ NdrFcLong( 0xe ),   /* 14 */
/* 228 */ NdrFcShort( 0x2aa ),          /* Offset=
682 (910) */
/* 230 */ NdrFcLong( 0x400e ),          /* 16398 */
/* 234 */ NdrFcShort( 0x2b0 ),          /* Offset=
688 (922) */
/* 236 */ NdrFcLong( 0x4010 ),          /* 16400 */
/* 240 */ NdrFcShort( 0x2ae ),          /* Offset=
686 (926) */
/* 242 */ NdrFcLong( 0x4012 ),          /* 16402 */
/* 246 */ NdrFcShort( 0x26c ),          /* Offset=
620 (866) */
/* 248 */ NdrFcLong( 0x4013 ),          /* 16403 */
/* 252 */ NdrFcShort( 0x26a ),          /* Offset=
618 (870) */
/* 254 */ NdrFcLong( 0x4016 ),          /* 16406 */
/* 258 */ NdrFcShort( 0x264 ),          /* Offset=
612 (870) */
/* 260 */ NdrFcLong( 0x4017 ),          /* 16407 */
/* 264 */ NdrFcShort( 0x25e ),          /* Offset=
606 (870) */
/* 266 */ NdrFcLong( 0x0 ),   /* 0 */
/* 270 */ NdrFcShort( 0x0 ),  /* Offset= 0 (270) */
/* 272 */ NdrFcLong( 0x1 ),   /* 1 */
/* 276 */ NdrFcShort( 0x0 ),  /* Offset= 0 (276) */
/* 278 */ NdrFcShort( 0xffffffff ),     /* Offset= -1
(277) */
/* 280 */
                                0x15,               /*
FC_STRUCT */
                                0x7,                /*
7 */
/* 282 */ NdrFcShort( 0x8 ),  /* 8 */
/* 284 */ 0xb,                /* FC_HYPER */
                                0x5b,               /*
FC_END */
/* 286 */
                                0x12, 0x0,          /*
FC_UP */
/* 288 */ NdrFcShort( 0xe ),  /* Offset= 14 (302) */
/* 290 */
                                0x1b,               /*
FC_CARRAY */
                                0x1,                /*
1 */
/* 292 */ NdrFcShort( 0x2 ),  /* 2 */
/* 294 */ 0x9,                /* Corr desc: FC_ULONG
*/
                                0x0,                /*
*/
/* 296 */ NdrFcShort( 0xfffc ),         /* -4 */
/* 298 */ NdrFcShort( 0x1 ),  /* Corr flags:  early,
*/
/* 300 */ 0x6,                /* FC_SHORT */
                                0x5b,               /*
FC_END */
/* 302 */
                                0x17,               /*
FC_CSTRUCT */
                                0x3,                /*
3 */
/* 304 */ NdrFcShort( 0x8 ),  /* 8 */
/* 306 */ NdrFcShort( 0xfffffff0 ),     /* Offset= -
16 (290) */
/* 308 */ 0x8,                /* FC_LONG */
                                0x8,                /*
FC_LONG */
/* 310 */ 0x5c,               /* FC_PAD */
                                0x5b,               /*
FC_END */
/* 312 */
                                0x2f,               /*
FC_IP */
                                0x5a,               /*
FC_CONSTANT_IID */
/* 314 */ NdrFcLong( 0x0 ),   /* 0 */
/* 318 */ NdrFcShort( 0x0 ),  /* 0 */
/* 320 */ NdrFcShort( 0x0 ),  /* 0 */
/* 322 */ 0xc0,               /* 192 */
                                0x0,                /*
0 */
/* 324 */ 0x0,                /* 0 */
                                0x0,                /*
0 */
/* 326 */ 0x0,                /* 0 */
                                0x0,                /*
0 */
/* 328 */ 0x0,                /* 0 */
                                0x46,               /*
70 */
/* 330 */
                                0x2f,               /*
FC_IP */
                                0x5a,               /*
FC_CONSTANT_IID */
/* 332 */ NdrFcLong( 0x20400 ),         /* 132096 */
/* 336 */ NdrFcShort( 0x0 ),  /* 0 */
/* 338 */ NdrFcShort( 0x0 ),  /* 0 */
/* 340 */ 0xc0,               /* 192 */
                                0x0,                /*
0 */
/* 342 */ 0x0,                /* 0 */
                                0x0,                /*
0 */
/* 344 */ 0x0,                /* 0 */
                                0x0,                /*
0 */
/* 346 */ 0x0,                /* 0 */
                                0x46,               /*
70 */
/* 348 */
                                0x12, 0x10,         /*
FC_UP [pointer_deref] */
/* 350 */ NdrFcShort( 0x2 ),  /* Offset= 2 (352) */
/* 352 */
                                0x12, 0x0,          /*
FC_UP */
/* 354 */ NdrFcShort( 0x1e6 ),          /* Offset=
486 (840) */
/* 356 */
                                0x2a,               /*
FC_ENCAPSULATED_UNION */
                                0x89,               /*
137 */
/* 358 */ NdrFcShort( 0x20 ), /* 32 */
/* 360 */ NdrFcShort( 0xa ),  /* 10 */
/* 362 */ NdrFcLong( 0x8 ),   /* 8 */
/* 366 */ NdrFcShort( 0x50 ), /* Offset= 80 (446) */
/* 368 */ NdrFcLong( 0xd ),   /* 13 */
/* 372 */ NdrFcShort( 0x70 ), /* Offset= 112 (484) */
/* 374 */ NdrFcLong( 0x9 ),   /* 9 */
/* 378 */ NdrFcShort( 0x90 ), /* Offset= 144 (522) */
/* 380 */ NdrFcLong( 0xc ),   /* 12 */
/* 384 */ NdrFcShort( 0xb0 ), /* Offset= 176 (560) */
/* 386 */ NdrFcLong( 0x24 ),  /* 36 */
/* 390 */ NdrFcShort( 0x104 ),          /* Offset=
260 (650) */
/* 392 */ NdrFcLong( 0x800d ),          /* 32781 */
/* 396 */ NdrFcShort( 0x120 ),          /* Offset=
288 (684) */
/* 398 */ NdrFcLong( 0x10 ),  /* 16 */
/* 402 */ NdrFcShort( 0x13a ),          /* Offset=
314 (716) */
/* 404 */ NdrFcLong( 0x2 ),   /* 2 */
/* 408 */ NdrFcShort( 0x150 ),          /* Offset=
336 (744) */
/* 410 */ NdrFcLong( 0x3 ),   /* 3 */
/* 414 */ NdrFcShort( 0x166 ),          /* Offset=
358 (772) */
/* 416 */ NdrFcLong( 0x14 ),  /* 20 */
/* 420 */ NdrFcShort( 0x17c ),          /* Offset=
380 (800) */
/* 422 */ NdrFcShort( 0xffffffff ),     /* Offset= -1
(421) */
/* 424 */
                                0x21,               /*
FC_BOGUS_ARRAY */
                                0x3,                /*
3 */
/* 426 */ NdrFcShort( 0x0 ),  /* 0 */
/* 428 */ 0x19,               /* Corr desc:  field
pointer, FC_ULONG */
                                0x0,                /*
*/
/* 430 */ NdrFcShort( 0x0 ),  /* 0 */
/* 432 */ NdrFcShort( 0x1 ),  /* Corr flags:  early,
*/
/* 434 */ NdrFcLong( 0xffffffff ),      /* -1 */
/* 438 */ NdrFcShort( 0x0 ),  /* Corr flags:  */
/* 440 */
                                0x12, 0x0,          /*
FC_UP */
/* 442 */ NdrFcShort( 0xffffff74 ),     /* Offset= -
140 (302) */
```


©2005 Hewlett-Packard Company. All rights reserved.

```
/* 444 */ 0x5c,                /* FC_PAD */
                               0x5b,               /*
FC_END */
/* 446 */
                               0x1a,               /*
FC_BOGUS_STRUCT */
                               0x3,                /*
3 */
/* 448 */ NdrFcShort( 0x10 ), /* 16 */
/* 450 */ NdrFcShort( 0x0 ),  /* 0 */
/* 452 */ NdrFcShort( 0x6 ),  /* Offset= 6 (458) */
/* 454 */ 0x8,                /* FC_LONG */
                               0x39,               /*
FC_ALIGNM8 */
/* 456 */ 0x36,               /* FC_POINTER */
                               0x5b,               /*
FC_END */
/* 458 */
                               0x11, 0x0,          /*
FC_RP */
/* 460 */ NdrFcShort( 0xffffffdc ),     /* Offset= -
36 (424) */
/* 462 */
                               0x21,               /*
FC_BOGUS_ARRAY */
                               0x3,                /*
3 */
/* 464 */ NdrFcShort( 0x0 ),  /* 0 */
/* 466 */ 0x19,               /* Corr desc:  field
pointer, FC_ULONG */
                               0x0,                /*
*/
/* 468 */ NdrFcShort( 0x0 ),  /* 0 */
/* 470 */ NdrFcShort( 0x1 ),  /* Corr flags:  early,
*/
/* 472 */ NdrFcLong( 0xffffffff ),      /* -1 */
/* 476 */ NdrFcShort( 0x0 ),  /* Corr flags:  */
/* 478 */ 0x4c,               /* FC_EMBEDDED_COMPLEX
*/
                               0x0,                /*
0 */
/* 480 */ NdrFcShort( 0xffffff58 ),     /* Offset= -
168 (312) */
/* 482 */ 0x5c,               /* FC_PAD */
                               0x5b,               /*
FC_END */
/* 484 */
                               0x1a,               /*
FC_BOGUS_STRUCT */
                               0x3,                /*
3 */
/* 486 */ NdrFcShort( 0x10 ), /* 16 */
/* 488 */ NdrFcShort( 0x0 ),  /* 0 */
/* 490 */ NdrFcShort( 0x6 ),  /* Offset= 6 (496) */
/* 492 */ 0x8,                /* FC_LONG */
                               0x39,               /*
FC_ALIGNM8 */
/* 494 */ 0x36,               /* FC_POINTER */
                               0x5b,               /*
FC_END */
/* 496 */
                               0x11, 0x0,          /*
FC_RP */
/* 498 */ NdrFcShort( 0xffffffdc ),     /* Offset= -
36 (462) */
/* 500 */
                               0x21,               /*
FC_BOGUS_ARRAY */
                               0x3,                /*
3 */
/* 502 */ NdrFcShort( 0x0 ),  /* 0 */
/* 504 */ 0x19,               /* Corr desc:  field
pointer, FC_ULONG */
                               0x0,                /*
*/
/* 506 */ NdrFcShort( 0x0 ),  /* 0 */
/* 508 */ NdrFcShort( 0x1 ),  /* Corr flags:  early,
*/
/* 510 */ NdrFcLong( 0xffffffff ),      /* -1 */
/* 514 */ NdrFcShort( 0x0 ),  /* Corr flags:  */
/* 516 */ 0x4c,               /* FC_EMBEDDED_COMPLEX
*/
                               0x0,                /*
0 */
/* 518 */ NdrFcShort( 0xffffff44 ),     /* Offset= -
188 (330) */
/* 520 */ 0x5c,               /* FC_PAD */
                               0x5b,               /*
FC_END */
/* 522 */
                               0x1a,               /*
FC_BOGUS_STRUCT */
                               0x3,                /*
3 */
/* 524 */ NdrFcShort( 0x10 ), /* 16 */
/* 526 */ NdrFcShort( 0x0 ),  /* 0 */
/* 528 */ NdrFcShort( 0x6 ),  /* Offset= 6 (534) */
/* 530 */ 0x8,                /* FC_LONG */
                               0x39,               /*
FC_ALIGNM8 */
/* 532 */ 0x36,               /* FC_POINTER */
                               0x5b,               /*
FC_END */
/* 534 */
                               0x11, 0x0,          /*
FC_RP */
/* 536 */ NdrFcShort( 0xffffffdc ),     /* Offset= -
36 (500) */
/* 538 */
                               0x21,               /*
FC_BOGUS_ARRAY */
                               0x3,                /*
3 */
/* 540 */ NdrFcShort( 0x0 ),  /* 0 */
/* 542 */ 0x19,               /* Corr desc:  field
pointer, FC_ULONG */
                               0x0,                /*
*/
/* 544 */ NdrFcShort( 0x0 ),  /* 0 */
/* 546 */ NdrFcShort( 0x1 ),  /* Corr flags:  early,
*/
/* 548 */ NdrFcLong( 0xffffffff ),      /* -1 */
/* 552 */ NdrFcShort( 0x0 ),  /* Corr flags:  */
/* 554 */
                               0x12, 0x0,          /*
FC_UP */
/* 556 */ NdrFcShort( 0x176 ),          /* Offset=
374 (930) */
/* 558 */ 0x5c,               /* FC_PAD */
                               0x5b,               /*
FC_END */
/* 560 */
                               0x1a,               /*
FC_BOGUS_STRUCT */
                               0x3,                /*
3 */
/* 562 */ NdrFcShort( 0x10 ), /* 16 */
/* 564 */ NdrFcShort( 0x0 ),  /* 0 */
/* 566 */ NdrFcShort( 0x6 ),  /* Offset= 6 (572) */
/* 568 */ 0x8,                /* FC_LONG */
                               0x39,               /*
FC_ALIGNM8 */
/* 570 */ 0x36,               /* FC_POINTER */
                               0x5b,               /*
FC_END */
/* 572 */
                               0x11, 0x0,          /*
FC_RP */
/* 574 */ NdrFcShort( 0xffffffdc ),     /* Offset= -
36 (538) */
/* 576 */
                               0x2f,               /*
FC_IP */
                               0x5a,               /*
FC_CONSTANT_IID */
/* 578 */ NdrFcLong( 0x2f ),  /* 47 */
/* 582 */ NdrFcShort( 0x0 ),  /* 0 */
/* 584 */ NdrFcShort( 0x0 ),  /* 0 */
/* 586 */ 0xc0,               /* 192 */
                               0x0,                /*
0 */
/* 588 */ 0x0,                /* 0 */
                               0x0,                /*
0 */
/* 590 */ 0x0,                /* 0 */
                               0x0,                /*
0 */
/* 592 */ 0x0,                /* 0 */
                               0x46,               /*
70 */
/* 594 */
                               0x1b,               /*
FC_CARRAY */
                               0x0,                /*
0 */
/* 596 */ NdrFcShort( 0x1 ),  /* 1 */
/* 598 */ 0x19,               /* Corr desc:  field
pointer, FC_ULONG */
                               0x0,                /*
*/
/* 600 */ NdrFcShort( 0x4 ),  /* 4 */
/* 602 */ NdrFcShort( 0x1 ),  /* Corr flags:  early,
*/
/* 604 */ 0x1,                /* FC_BYTE */
                               0x5b,               /*
FC_END */
/* 606 */
                               0x1a,               /*
FC_BOGUS_STRUCT */
```


©2005 Hewlett-Packard Company. All rights reserved.

```
                                0x3,                /*
3 */
/* 608 */ NdrFcShort( 0x18 ), /* 24 */
/* 610 */ NdrFcShort( 0x0 ),  /* 0 */
/* 612 */ NdrFcShort( 0xc ),  /* Offset= 12 (624) */
/* 614 */ 0x8,                /* FC_LONG */
                                0x8,                /*
FC_LONG */
/* 616 */ 0x4c,               /* FC_EMBEDDED_COMPLEX
*/
                                0x0,                /*
0 */
/* 618 */ NdrFcShort( 0xffffffd6 ),     /* Offset= -
42 (576) */
/* 620 */ 0x39,               /* FC_ALIGNM8 */
                                0x36,               /*
FC_POINTER */
/* 622 */ 0x5c,               /* FC_PAD */
                                0x5b,               /*
FC_END */
/* 624 */
                                0x12, 0x0,          /*
FC_UP */
/* 626 */ NdrFcShort( 0xffffffe0 ),     /* Offset= -
32 (594) */
/* 628 */
                                0x21,               /*
FC_BOGUS_ARRAY */
                                0x3,                /*
3 */
/* 630 */ NdrFcShort( 0x0 ),  /* 0 */
/* 632 */ 0x19,               /* Corr desc:  field
pointer, FC_ULONG */
                                0x0,                /*
*/
/* 634 */ NdrFcShort( 0x0 ),  /* 0 */
/* 636 */ NdrFcShort( 0x1 ),  /* Corr flags:  early,
*/
/* 638 */ NdrFcLong( 0xffffffff ),      /* -1 */
/* 642 */ NdrFcShort( 0x0 ),  /* Corr flags:  */
/* 644 */
                                0x12, 0x0,          /*
FC_UP */
/* 646 */ NdrFcShort( 0xffffffd8 ),     /* Offset= -
40 (606) */
/* 648 */ 0x5c,               /* FC_PAD */
                                0x5b,               /*
FC_END */
/* 650 */
                                0x1a,               /*
FC_BOGUS_STRUCT */
                                0x3,                /*
3 */
/* 652 */ NdrFcShort( 0x10 ), /* 16 */
/* 654 */ NdrFcShort( 0x0 ),  /* 0 */
/* 656 */ NdrFcShort( 0x6 ),  /* Offset= 6 (662) */
/* 658 */ 0x8,                /* FC_LONG */
                                0x39,               /*
FC_ALIGNM8 */
/* 660 */ 0x36,               /* FC_POINTER */
                                0x5b,               /*
FC_END */
/* 662 */
                                0x11, 0x0,          /*
FC_RP */
/* 664 */ NdrFcShort( 0xffffffdc ),     /* Offset= -
36 (628) */
/* 666 */
                                0x1d,               /*
FC_SMFARRAY */
                                0x0,                /*
0 */
/* 668 */ NdrFcShort( 0x8 ),  /* 8 */
/* 670 */ 0x1,                /* FC_BYTE */
                                0x5b,               /*
FC_END */
/* 672 */
                                0x15,               /*
FC_STRUCT */
                                0x3,                /*
3 */
/* 674 */ NdrFcShort( 0x10 ), /* 16 */
/* 676 */ 0x8,                /* FC_LONG */
                                0x6,                /*
FC_SHORT */
/* 678 */ 0x6,                /* FC_SHORT */
                                0x4c,               /*
FC_EMBEDDED_COMPLEX */
/* 680 */ 0x0,                /* 0 */
                                NdrFcShort( 0xfffffff1
),        /* Offset= -15 (666) */
                                0x5b,               /*
FC_END */
/* 684 */
                                0x1a,               /*
FC_BOGUS_STRUCT */
                                0x3,                /*
3 */
/* 686 */ NdrFcShort( 0x20 ), /* 32 */
/* 688 */ NdrFcShort( 0x0 ),  /* 0 */
/* 690 */ NdrFcShort( 0xa ),  /* Offset= 10 (700) */
/* 692 */ 0x8,                /* FC_LONG */
                                0x39,               /*
FC_ALIGNM8 */
/* 694 */ 0x36,               /* FC_POINTER */
                                0x4c,               /*
FC_EMBEDDED_COMPLEX */
/* 696 */ 0x0,                /* 0 */
                                NdrFcShort( 0xffffffe7
),        /* Offset= -25 (672) */
                                0x5b,               /*
FC_END */
/* 700 */
                                0x11, 0x0,          /*
FC_RP */
/* 702 */ NdrFcShort( 0xffffff10 ),     /* Offset= -
240 (462) */
/* 704 */
                                0x1b,               /*
FC_CARRAY */
                                0x0,                /*
0 */
/* 706 */ NdrFcShort( 0x1 ),  /* 1 */
/* 708 */ 0x19,               /* Corr desc:  field
pointer, FC_ULONG */
                                0x0,                /*
*/
/* 710 */ NdrFcShort( 0x0 ),  /* 0 */
/* 712 */ NdrFcShort( 0x1 ),  /* Corr flags:  early,
*/
/* 714 */ 0x1,                /* FC_BYTE */
                                0x5b,               /*
FC_END */
/* 716 */
                                0x1a,               /*
FC_BOGUS_STRUCT */
                                0x3,                /*
3 */
/* 718 */ NdrFcShort( 0x10 ), /* 16 */
/* 720 */ NdrFcShort( 0x0 ),  /* 0 */
/* 722 */ NdrFcShort( 0x6 ),  /* Offset= 6 (728) */
/* 724 */ 0x8,                /* FC_LONG */
                                0x39,               /*
FC_ALIGNM8 */
/* 726 */ 0x36,               /* FC_POINTER */
                                0x5b,               /*
FC_END */
/* 728 */
                                0x12, 0x0,          /*
FC_UP */
/* 730 */ NdrFcShort( 0xffffffe6 ),     /* Offset= -
26 (704) */
/* 732 */
                                0x1b,               /*
FC_CARRAY */
                                0x1,                /*
1 */
/* 734 */ NdrFcShort( 0x2 ),  /* 2 */
/* 736 */ 0x19,               /* Corr desc:  field
pointer, FC_ULONG */
                                0x0,                /*
*/
/* 738 */ NdrFcShort( 0x0 ),  /* 0 */
/* 740 */ NdrFcShort( 0x1 ),  /* Corr flags:  early,
*/
/* 742 */ 0x6,                /* FC_SHORT */
                                0x5b,               /*
FC_END */
/* 744 */
                                0x1a,               /*
FC_BOGUS_STRUCT */
                                0x3,                /*
3 */
/* 746 */ NdrFcShort( 0x10 ), /* 16 */
/* 748 */ NdrFcShort( 0x0 ),  /* 0 */
/* 750 */ NdrFcShort( 0x6 ),  /* Offset= 6 (756) */
/* 752 */ 0x8,                /* FC_LONG */
                                0x39,               /*
FC_ALIGNM8 */
/* 754 */ 0x36,               /* FC_POINTER */
                                0x5b,               /*
FC_END */
/* 756 */
                                0x12, 0x0,          /*
FC_UP */
/* 758 */ NdrFcShort( 0xffffffe6 ),     /* Offset= -
26 (732) */
/* 760 */
```


©2005 Hewlett-Packard Company. All rights reserved.

```
                                0x1b,               /*
FC_CARRAY */
                                0x3,                /*
3 */
/* 762 */ NdrFcShort( 0x4 ),  /* 4 */
/* 764 */ 0x19,               /* Corr desc:  field
pointer, FC_ULONG */
                                0x0,                /*
*/
/* 766 */ NdrFcShort( 0x0 ),  /* 0 */
/* 768 */ NdrFcShort( 0x1 ),  /* Corr flags:  early,
*/
/* 770 */ 0x8,                /* FC_LONG */
                                0x5b,               /*
FC_END */
/* 772 */
                                0x1a,               /*
FC_BOGUS_STRUCT */
                                0x3,                /*
3 */
/* 774 */ NdrFcShort( 0x10 ), /* 16 */
/* 776 */ NdrFcShort( 0x0 ),  /* 0 */
/* 778 */ NdrFcShort( 0x6 ),  /* Offset= 6 (784) */
/* 780 */ 0x8,                /* FC_LONG */
                                0x39,               /*
FC_ALIGNM8 */
/* 782 */ 0x36,               /* FC_POINTER */
                                0x5b,               /*
FC_END */
/* 784 */
                                0x12, 0x0,          /*
FC_UP */
/* 786 */ NdrFcShort( 0xffffffe6 ),     /* Offset= -
26 (760) */
/* 788 */
                                0x1b,               /*
FC_CARRAY */
                                0x7,                /*
7 */
/* 790 */ NdrFcShort( 0x8 ),  /* 8 */
/* 792 */ 0x19,               /* Corr desc:  field
pointer, FC_ULONG */
                                0x0,                /*
*/
/* 794 */ NdrFcShort( 0x0 ),  /* 0 */
/* 796 */ NdrFcShort( 0x1 ),  /* Corr flags:  early,
*/
/* 798 */ 0xb,                /* FC_HYPER */
                                0x5b,               /*
FC_END */
/* 800 */
                                0x1a,               /*
FC_BOGUS_STRUCT */
                                0x3,                /*
3 */
/* 802 */ NdrFcShort( 0x10 ), /* 16 */
/* 804 */ NdrFcShort( 0x0 ),  /* 0 */
/* 806 */ NdrFcShort( 0x6 ),  /* Offset= 6 (812) */
/* 808 */ 0x8,                /* FC_LONG */
                                0x39,               /*
FC_ALIGNM8 */
/* 810 */ 0x36,               /* FC_POINTER */
                                0x5b,               /*
FC_END */
/* 812 */
                                0x12, 0x0,          /*
FC_UP */
/* 814 */ NdrFcShort( 0xffffffe6 ),     /* Offset= -
26 (788) */
/* 816 */
                                0x15,               /*
FC_STRUCT */
                                0x3,                /*
3 */
/* 818 */ NdrFcShort( 0x8 ),  /* 8 */
/* 820 */ 0x8,                /* FC_LONG */
                                0x8,                /*
FC_LONG */
/* 822 */ 0x5c,               /* FC_PAD */
                                0x5b,               /*
FC_END */
/* 824 */
                                0x1b,               /*
FC_CARRAY */
                                0x3,                /*
3 */
/* 826 */ NdrFcShort( 0x8 ),  /* 8 */
/* 828 */ 0x7,                /* Corr desc: FC_USHORT
*/
                                0x0,                /*
*/
/* 830 */ NdrFcShort( 0xffc8 ),         /* -56 */
/* 832 */ NdrFcShort( 0x1 ),  /* Corr flags:  early,
*/
/* 834 */ 0x4c,               /* FC_EMBEDDED_COMPLEX
*/
                                0x0,                /*
0 */
/* 836 */ NdrFcShort( 0xffffffec ),     /* Offset= -
20 (816) */
/* 838 */ 0x5c,               /* FC_PAD */
                                0x5b,               /*
FC_END */
/* 840 */
                                0x1a,               /*
FC_BOGUS_STRUCT */
                                0x3,                /*
3 */
/* 842 */ NdrFcShort( 0x38 ), /* 56 */
/* 844 */ NdrFcShort( 0xffffffec ),     /* Offset= -
20 (824) */
/* 846 */ NdrFcShort( 0x0 ),  /* Offset= 0 (846) */
/* 848 */ 0x6,                /* FC_SHORT */
                                0x6,                /*
FC_SHORT */
/* 850 */ 0x38,               /* FC_ALIGNM4 */
                                0x8,                /*
FC_LONG */
/* 852 */ 0x8,                /* FC_LONG */
                                0x4c,               /*
FC_EMBEDDED_COMPLEX */
/* 854 */ 0x4,                /* 4 */
                                NdrFcShort( 0xfffffe0d
),        /* Offset= -499 (356) */
                                0x5b,               /*
FC_END */
/* 858 */
                                0x12, 0x0,          /*
FC_UP */
/* 860 */ NdrFcShort( 0xffffff02 ),     /* Offset= -
254 (606) */
/* 862 */
                                0x12, 0x8,          /*
FC_UP [simple_pointer] */
/* 864 */ 0x1,                /* FC_BYTE */
                                0x5c,               /*
FC_PAD */
/* 866 */
                                0x12, 0x8,          /*
FC_UP [simple_pointer] */
/* 868 */ 0x6,                /* FC_SHORT */
                                0x5c,               /*
FC_PAD */
/* 870 */
                                0x12, 0x8,          /*
FC_UP [simple_pointer] */
/* 872 */ 0x8,                /* FC_LONG */
                                0x5c,               /*
FC_PAD */
/* 874 */
                                0x12, 0x8,          /*
FC_UP [simple_pointer] */
/* 876 */ 0xa,                /* FC_FLOAT */
                                0x5c,               /*
FC_PAD */
/* 878 */
                                0x12, 0x8,          /*
FC_UP [simple_pointer] */
/* 880 */ 0xc,                /* FC_DOUBLE */
                                0x5c,               /*
FC_PAD */
/* 882 */
                                0x12, 0x0,          /*
FC_UP */
/* 884 */ NdrFcShort( 0xfffffda4 ),     /* Offset= -
604 (280) */
/* 886 */
                                0x12, 0x10,         /*
FC_UP [pointer_deref] */
/* 888 */ NdrFcShort( 0xfffffda6 ),     /* Offset= -
602 (286) */
/* 890 */
                                0x12, 0x10,         /*
FC_UP [pointer_deref] */
/* 892 */ NdrFcShort( 0xfffffdbc ),     /* Offset= -
580 (312) */
/* 894 */
                                0x12, 0x10,         /*
FC_UP [pointer_deref] */
/* 896 */ NdrFcShort( 0xfffffdca ),     /* Offset= -
566 (330) */
/* 898 */
                                0x12, 0x10,         /*
FC_UP [pointer_deref] */
/* 900 */ NdrFcShort( 0xfffffdd8 ),     /* Offset= -
552 (348) */
/* 902 */
```


©2005 Hewlett-Packard Company. All rights reserved.

```
                                0x12, 0x10,         /*
FC_UP [pointer_deref] */
/* 904 */ NdrFcShort( 0x2 ),  /* Offset= 2 (906) */
/* 906 */
                                0x12, 0x0,          /*
FC_UP */
/* 908 */ NdrFcShort( 0x16 ), /* Offset= 22 (930) */
/* 910 */
                                0x15,               /*
FC_STRUCT */
                                0x7,                /*
7 */
/* 912 */ NdrFcShort( 0x10 ), /* 16 */
/* 914 */ 0x6,                /* FC_SHORT */
                                0x1,                /*
FC_BYTE */
/* 916 */ 0x1,                /* FC_BYTE */
                                0x38,               /*
FC_ALIGNM4 */
/* 918 */ 0x8,                /* FC_LONG */
                                0x39,               /*
FC_ALIGNM8 */
/* 920 */ 0xb,                /* FC_HYPER */
                                0x5b,               /*
FC_END */
/* 922 */
                                0x12, 0x0,          /*
FC_UP */
/* 924 */ NdrFcShort( 0xfffffff2 ),     /* Offset= -
14 (910) */
/* 926 */
                                0x12, 0x8,          /*
FC_UP [simple_pointer] */
/* 928 */ 0x2,                /* FC_CHAR */
                                0x5c,               /*
FC_PAD */
/* 930 */
                                0x1a,               /*
FC_BOGUS_STRUCT */
                                0x7,                /*
7 */
/* 932 */ NdrFcShort( 0x20 ), /* 32 */
/* 934 */ NdrFcShort( 0x0 ),  /* 0 */
/* 936 */ NdrFcShort( 0x0 ),  /* Offset= 0 (936) */
/* 938 */ 0x8,                /* FC_LONG */
                                0x8,                /*
FC_LONG */
/* 940 */ 0x6,                /* FC_SHORT */
                                0x6,                /*
FC_SHORT */
/* 942 */ 0x6,                /* FC_SHORT */
                                0x6,                /*
FC_SHORT */
/* 944 */ 0x4c,               /* FC_EMBEDDED_COMPLEX
*/
                                0x0,                /*
0 */
/* 946 */ NdrFcShort( 0xfffffc54 ),     /* Offset= -
940 (6) */
/* 948 */ 0x5c,               /* FC_PAD */
                                0x5b,               /*
FC_END */
/* 950 */ 0xb4,               /* FC_USER_MARSHAL */
                                0x83,               /*
131 */
/* 952 */ NdrFcShort( 0x0 ),  /* 0 */
/* 954 */ NdrFcShort( 0x18 ), /* 24 */
/* 956 */ NdrFcShort( 0x0 ),  /* 0 */
/* 958 */ NdrFcShort( 0xfffffc44 ),     /* Offset= -
956 (2) */
/* 960 */
                                0x11, 0x4,          /*
FC_RP [alloced_on_stack] */
/* 962 */ NdrFcShort( 0x6 ),  /* Offset= 6 (968) */
/* 964 */
                                0x13, 0x0,          /*
FC_OP */
/* 966 */ NdrFcShort( 0xfffffffdc ),     /* Offset= -
36 (930) */
/* 968 */ 0xb4,               /* FC_USER_MARSHAL */
                                0x83,               /*
131 */
/* 970 */ NdrFcShort( 0x0 ),  /* 0 */
/* 972 */ NdrFcShort( 0x18 ), /* 24 */
/* 974 */ NdrFcShort( 0x0 ),  /* 0 */
/* 976 */ NdrFcShort( 0xfffffff4 ),     /* Offset= -
12 (964) */

                                0x0
        }
    };

const CInterfaceProxyVtbl *
_tpcc_com_ps_ProxyVtblList[] =
{
    ( CInterfaceProxyVtbl *) &_ITPCCProxyVtbl,
    0
};

const CInterfaceStubVtbl *
_tpcc_com_ps_StubVtblList[] =
{
    ( CInterfaceStubVtbl *) &_ITPCCStubVtbl,
    0
};

PCInterfaceName const
_tpcc_com_ps_InterfaceNamesList[] =
{
    "ITPCC",
    0
};


#define _tpcc_com_ps_CHECK_IID(n)
            IID_GENERIC_CHECK_IID( _tpcc_com_ps, pIID,
n)

int __stdcall _tpcc_com_ps_IID_Lookup( const IID *
pIID, int * pIndex )
{

    if(!_tpcc_com_ps_CHECK_IID(0))
        {
        *pIndex = 0;
        return 1;
        }

    return 0;
}

const ExtendedProxyFileInfo tpcc_com_ps_ProxyFileInfo
=
{
    (PCInterfaceProxyVtblList *) &
_tpcc_com_ps_ProxyVtblList,
    (PCInterfaceStubVtblList *) &
_tpcc_com_ps_StubVtblList,
    (const PCInterfaceName * ) &
_tpcc_com_ps_InterfaceNamesList,
    0, // no delegation
    & _tpcc_com_ps_IID_Lookup,
    1,
    2,
    0, /* table of [async_uuid] interfaces */
    0, /* Filler1 */
    0, /* Filler2 */
    0  /* Filler3 */
};


#endif /* defined(_M_IA64) || defined(_M_AXP64)*/
```

tpcc_com_ps_p.c

```
#pragma warning( disable: 4049 )  /* more than 64k
source lines */

/* this ALWAYS GENERATED file contains the proxy stub
code */


 /* File created by MIDL compiler version 5.03.0280
*/
/* at Thu Dec 13 23:13:08 2001
 */
/* Compiler settings for .\src\tpcc_com_ps.idl:
    Oicf (OptLev=i2), W1, Zp8, env=Win32 (32b run),
ms_ext, c_ext
    error checks: allocation ref bounds_check enum
stub_data
    VC __declspec() decoration level:
         __declspec(uuid()), __declspec(selectany),
__declspec(novtable)
         DECLSPEC_UUID(), MIDL_INTERFACE()
*/
//@@MIDL_FILE_HEADING(  )

#if !defined(_M_IA64) && !defined(_M_AXP64)
#define USE_STUBLESS_PROXY


/* verify that the <rpcproxy.h> version is high
enough to compile this file*/
```


©2005 Hewlett-Packard Company. All rights reserved.

```
#ifndef __REDQ_RPCPROXY_H_VERSION__
#define __REQUIRED_RPCPROXY_H_VERSION__ 440
#endif


#include "rpcproxy.h"
#ifndef __RPCPROXY_H_VERSION__
#error this stub requires an updated version of
<rpcproxy.h>
#endif // __RPCPROXY_H_VERSION__


#include "tpcc_com_ps.h"

#define TYPE_FORMAT_STRING_SIZE   997
#define PROC_FORMAT_STRING_SIZE   193
#define TRANSMIT_AS_TABLE_SIZE    0
#define WIRE_MARSHAL_TABLE_SIZE   1

typedef struct _MIDL_TYPE_FORMAT_STRING
    {
    short          Pad;
    unsigned char  Format[ TYPE_FORMAT_STRING_SIZE ];
    } MIDL_TYPE_FORMAT_STRING;

typedef struct _MIDL_PROC_FORMAT_STRING
    {
    short          Pad;
    unsigned char  Format[ PROC_FORMAT_STRING_SIZE ];
    } MIDL_PROC_FORMAT_STRING;


extern const MIDL_TYPE_FORMAT_STRING
__MIDL_TypeFormatString;
extern const MIDL_PROC_FORMAT_STRING
__MIDL_ProcFormatString;


/* Standard interface: __MIDL_itf_tpcc_com_ps_0000,
ver. 0.0,

GUID={0x00000000,0x0000,0x0000,{0x00,0x00,0x00,0x00,0
x00,0x00,0x00,0x00}} */


/* Object interface: IUnknown, ver. 0.0,

GUID={0x00000000,0x0000,0x0000,{0xC0,0x00,0x00,0x00,0
x00,0x00,0x00,0x46}} */


/* Object interface: ITPCC, ver. 0.0,

GUID={0xFEEE6AA2,0x84B1,0x11d2,{0xBA,0x47,0x00,0xC0,0
x4F,0xBF,0xE0,0x8B}} */


extern const MIDL_STUB_DESC Object_StubDesc;


extern const MIDL_SERVER_INFO ITPCC_ServerInfo;

#pragma code_seg(".orpc")

static const unsigned short
ITPCC_FormatStringOffsetTable[] =
    {
    0,
    34,
    68,
    102,
    136,
    170
    };

static const MIDL_SERVER_INFO ITPCC_ServerInfo =
    {
    &Object_StubDesc,
    0,
    __MIDL_ProcFormatString.Format,
    &ITPCC_FormatStringOffsetTable[-3],
    0,
    0,
    0,
    0
    };

static const MIDL_STUBLESS_PROXY_INFO ITPCC_ProxyInfo
=
    {
    &Object_StubDesc,
    __MIDL_ProcFormatString.Format,
    &ITPCC_FormatStringOffsetTable[-3],
    0,
    0,
    0
    };

CINTERFACE_PROXY_VTABLE(9) _ITPCCProxyVtbl =
{
    &ITPCC_ProxyInfo,
    &IID_ITPCC,
    IUnknown_QueryInterface_Proxy,
    IUnknown_AddRef_Proxy,
    IUnknown_Release_Proxy ,
    (void *)-1 /* ITPCC::NewOrder */ ,
    (void *)-1 /* ITPCC::Payment */ ,
    (void *)-1 /* ITPCC::Delivery */ ,
    (void *)-1 /* ITPCC::StockLevel */ ,
    (void *)-1 /* ITPCC::OrderStatus */ ,
    (void *)-1 /* ITPCC::CallSetComplete */
};

const CInterfaceStubVtbl _ITPCCStubVtbl =
{
    &IID_ITPCC,
    &ITPCC_ServerInfo,
    9,
    0, /* pure interpreted */
    CStdStubBuffer_METHODS
};

extern const USER_MARSHAL_ROUTINE_QUADRUPLE
UserMarshalRoutines[ WIRE_MARSHAL_TABLE_SIZE ];

static const MIDL_STUB_DESC Object_StubDesc =
    {
    0,
    NdrOleAllocate,
    NdrOleFree,
    0,
    0,
    0,
    0,
    0,
    __MIDL_TypeFormatString.Format,
    1, /* -error bounds_check flag */
    0x20000, /* Ndr library version */
    0,
    0x5030118, /* MIDL Version 5.3.280 */
    0,
    UserMarshalRoutines,
    0,  /* notify & notify_flag routine table */
    0x1, /* MIDL flag */
    0,  /* Reserved3 */
    0,  /* Reserved4 */
    0   /* Reserved5 */
    };

#pragma data_seg(".rdata")

static const USER_MARSHAL_ROUTINE_QUADRUPLE
UserMarshalRoutines[ WIRE_MARSHAL_TABLE_SIZE ] =
        {

            {
            VARIANT_UserSize
            ,VARIANT_UserMarshal
            ,VARIANT_UserUnmarshal
            ,VARIANT_UserFree
            }

        };


#if !defined(__RPC_WIN32__)
#error  Invalid build platform for this stub.
#endif

#if !(TARGET_IS_NT40_OR_LATER)
#error You need a Windows NT 4.0 or later to run this
stub because it uses these features:
#error   -Oif or -Oicf, [wire_marshal] or
[user_marshal] attribute.
#error However, your C/C++ compilation flags indicate
you intend to run this app on earlier systems.
#error This app will die there with the
RPC_X_WRONG_STUB_VERSION error.
#endif


static const MIDL_PROC_FORMAT_STRING
__MIDL_ProcFormatString =
    {
        0,
        {

          /* Procedure NewOrder */
```


©2005 Hewlett-Packard Company. All rights reserved.

```
                                0x33,               /*
FC_AUTO_HANDLE */
                                0x6c,               /*
Old Flags:  object, Oi2 */
/*  2 */  NdrFcLong( 0x0 ),   /* 0 */
/*  6 */  NdrFcShort( 0x3 ),  /* 3 */
#ifndef _ALPHA_
#ifndef _PPC_
#if !defined(_MIPS_)
/*  8 */  NdrFcShort( 0x1c ), /* x86 Stack
size/offset = 28 */
#else
                                NdrFcShort( 0x20 ), /*
MIPS Stack size/offset = 32 */
#endif
#else
                                NdrFcShort( 0x20 ), /*
PPC Stack size/offset = 32 */
#endif
#else
                                NdrFcShort( 0x28 ), /*
Alpha Stack size/offset = 40 */
#endif
/* 10 */  NdrFcShort( 0x0 ),  /* 0 */
/* 12 */  NdrFcShort( 0x8 ),  /* 8 */
/* 14 */  0x7,                /* Oi2 Flags:  srv must
size, clt must size, has return, */
                                0x3,                /*
3 */

          /* Parameter txn_in */

/* 16 */  NdrFcShort( 0x8b ), /* Flags:  must size,
must free, in, by val, */
#ifndef _ALPHA_
#ifndef _PPC_
#if !defined(_MIPS_)
/* 18 */  NdrFcShort( 0x4 ),  /* x86 Stack
size/offset = 4 */
#else
                                NdrFcShort( 0x8 ),  /*
MIPS Stack size/offset = 8 */
#endif
#else
                                NdrFcShort( 0x8 ),  /*
PPC Stack size/offset = 8 */
#endif
#else
                                NdrFcShort( 0x8 ),  /*
Alpha Stack size/offset = 8 */
#endif
/* 20 */  NdrFcShort( 0x3c8 ),          /* Type
Offset=968 */

          /* Parameter txn_out */

/* 22 */  NdrFcShort( 0x4113 ),         /* Flags:
must size, must free, out, simple ref, srv alloc
size=16 */
#ifndef _ALPHA_
#ifndef _PPC_
#if !defined(_MIPS_)
/* 24 */  NdrFcShort( 0x14 ), /* x86 Stack
size/offset = 20 */
#else
                                NdrFcShort( 0x18 ), /*
MIPS Stack size/offset = 24 */
#endif
#else
                                NdrFcShort( 0x18 ), /*
PPC Stack size/offset = 24 */
#endif
#else
                                NdrFcShort( 0x18 ), /*
Alpha Stack size/offset = 24 */
#endif
/* 26 */  NdrFcShort( 0x3da ),          /* Type
Offset=986 */

          /* Return value */

/* 28 */  NdrFcShort( 0x70 ), /* Flags:  out, return,
base type, */
#ifndef _ALPHA_
#ifndef _PPC_
#if !defined(_MIPS_)
/* 30 */  NdrFcShort( 0x18 ), /* x86 Stack
size/offset = 24 */
#else
                                NdrFcShort( 0x1c ), /*
MIPS Stack size/offset = 28 */
#endif
#else
                                NdrFcShort( 0x1c ), /*
PPC Stack size/offset = 28 */
#endif
#else
                                NdrFcShort( 0x20 ), /*
Alpha Stack size/offset = 32 */
#endif
/* 32 */  0x8,                /* FC_LONG */
                                0x0,                /*
0 */

          /* Procedure Payment */

/* 34 */  0x33,               /* FC_AUTO_HANDLE */
                                0x6c,               /*
Old Flags:  object, Oi2 */
/* 36 */  NdrFcLong( 0x0 ),   /* 0 */
/* 40 */  NdrFcShort( 0x4 ),  /* 4 */
#ifndef _ALPHA_
#ifndef _PPC_
#if !defined(_MIPS_)
/* 42 */  NdrFcShort( 0x1c ), /* x86 Stack
size/offset = 28 */
#else
                                NdrFcShort( 0x20 ), /*
MIPS Stack size/offset = 32 */
#endif
#else
                                NdrFcShort( 0x20 ), /*
PPC Stack size/offset = 32 */
#endif
#else
                                NdrFcShort( 0x28 ), /*
Alpha Stack size/offset = 40 */
#endif
/* 44 */  NdrFcShort( 0x0 ),  /* 0 */
/* 46 */  NdrFcShort( 0x8 ),  /* 8 */
/* 48 */  0x7,                /* Oi2 Flags:  srv must
size, clt must size, has return, */
                                0x3,                /*
3 */

          /* Parameter txn_in */

/* 50 */  NdrFcShort( 0x8b ), /* Flags:  must size,
must free, in, by val, */
#ifndef _ALPHA_
#ifndef _PPC_
#if !defined(_MIPS_)
/* 52 */  NdrFcShort( 0x4 ),  /* x86 Stack
size/offset = 4 */
#else
                                NdrFcShort( 0x8 ),  /*
MIPS Stack size/offset = 8 */
#endif
#else
                                NdrFcShort( 0x8 ),  /*
PPC Stack size/offset = 8 */
#endif
#else
                                NdrFcShort( 0x8 ),  /*
Alpha Stack size/offset = 8 */
#endif
/* 54 */  NdrFcShort( 0x3c8 ),          /* Type
Offset=968 */

          /* Parameter txn_out */

/* 56 */  NdrFcShort( 0x4113 ),         /* Flags:
must size, must free, out, simple ref, srv alloc
size=16 */
#ifndef _ALPHA_
#ifndef _PPC_
#if !defined(_MIPS_)
/* 58 */  NdrFcShort( 0x14 ), /* x86 Stack
size/offset = 20 */
#else
                                NdrFcShort( 0x18 ), /*
MIPS Stack size/offset = 24 */
#endif
#else
                                NdrFcShort( 0x18 ), /*
PPC Stack size/offset = 24 */
#endif
#else
                                NdrFcShort( 0x18 ), /*
Alpha Stack size/offset = 24 */
#endif
/* 60 */  NdrFcShort( 0x3da ),          /* Type
Offset=986 */

          /* Return value */

/* 62 */  NdrFcShort( 0x70 ), /* Flags:  out, return,
base type, */
```


©2005 Hewlett-Packard Company. All rights reserved.

```
#ifndef _ALPHA_
#ifndef _PPC_
#if !defined(_MIPS_)
/* 64 */  NdrFcShort( 0x18 ), /* x86 Stack
size/offset = 24 */
#else
                            NdrFcShort( 0x1c ), /*
MIPS Stack size/offset = 28 */
#endif
#else
                            NdrFcShort( 0x1c ), /*
PPC Stack size/offset = 28 */
#endif
#else
                            NdrFcShort( 0x20 ), /*
Alpha Stack size/offset = 32 */
#endif
/* 66 */  0x8,              /* FC_LONG */
                            0x0,              /*
0 */

          /* Procedure Delivery */

/* 68 */  0x33,             /* FC_AUTO_HANDLE */
                            0x6c,             /*
Old Flags:  object, Oi2 */
/* 70 */  NdrFcLong( 0x0 ),   /* 0 */
/* 74 */  NdrFcShort( 0x5 ),  /* 5 */
#ifndef _ALPHA_
#ifndef _PPC_
#if !defined(_MIPS_)
/* 76 */  NdrFcShort( 0x1c ), /* x86 Stack
size/offset = 28 */
#else
                            NdrFcShort( 0x20 ), /*
MIPS Stack size/offset = 32 */
#endif
#else
                            NdrFcShort( 0x20 ), /*
PPC Stack size/offset = 32 */
#endif
#else
                            NdrFcShort( 0x28 ), /*
Alpha Stack size/offset = 40 */
#endif
/* 78 */  NdrFcShort( 0x0 ),  /* 0 */
/* 80 */  NdrFcShort( 0x8 ),  /* 8 */
/* 82 */  0x7,              /* Oi2 Flags:  srv must
size, clt must size, has return, */
                            0x3,              /*
3 */

          /* Parameter txn_in */

/* 84 */  NdrFcShort( 0x8b ), /* Flags:  must size,
must free, in, by val, */
#ifndef _ALPHA_
#ifndef _PPC_
#if !defined(_MIPS_)
/* 86 */  NdrFcShort( 0x4 ),  /* x86 Stack
size/offset = 4 */
#else
                            NdrFcShort( 0x8 ),  /*
MIPS Stack size/offset = 8 */
#endif
#else
                            NdrFcShort( 0x8 ),  /*
PPC Stack size/offset = 8 */
#endif
#else
                            NdrFcShort( 0x8 ),  /*
Alpha Stack size/offset = 8 */
#endif
/* 88 */  NdrFcShort( 0x3c8 ),          /* Type
Offset=968 */

          /* Parameter txn_out */

/* 90 */  NdrFcShort( 0x4113 ),         /* Flags:
must size, must free, out, simple ref, srv alloc
size=16 */
#ifndef _ALPHA_
#ifndef _PPC_
#if !defined(_MIPS_)
/* 92 */  NdrFcShort( 0x14 ), /* x86 Stack
size/offset = 20 */
#else
                            NdrFcShort( 0x18 ), /*
MIPS Stack size/offset = 24 */
#endif
#else
                            NdrFcShort( 0x18 ), /*
PPC Stack size/offset = 24 */
#endif
#else
                            NdrFcShort( 0x18 ), /*
Alpha Stack size/offset = 24 */
#endif
/* 94 */  NdrFcShort( 0x3da ),          /* Type
Offset=986 */

          /* Return value */

/* 96 */  NdrFcShort( 0x70 ), /* Flags:  out, return,
base type, */
#ifndef _ALPHA_
#ifndef _PPC_
#if !defined(_MIPS_)
/* 98 */  NdrFcShort( 0x18 ), /* x86 Stack
size/offset = 24 */
#else
                            NdrFcShort( 0x1c ), /*
MIPS Stack size/offset = 28 */
#endif
#else
                            NdrFcShort( 0x1c ), /*
PPC Stack size/offset = 28 */
#endif
#else
                            NdrFcShort( 0x20 ), /*
Alpha Stack size/offset = 32 */
#endif
/* 100 */ 0x8,               /* FC_LONG */
                            0x0,              /*
0 */

          /* Procedure StockLevel */

/* 102 */ 0x33,              /* FC_AUTO_HANDLE */
                            0x6c,             /*
Old Flags:  object, Oi2 */
/* 104 */ NdrFcLong( 0x0 ),   /* 0 */
/* 108 */ NdrFcShort( 0x6 ),  /* 6 */
#ifndef _ALPHA_
#ifndef _PPC_
#if !defined(_MIPS_)
/* 110 */ NdrFcShort( 0x1c ), /* x86 Stack
size/offset = 28 */
#else
                            NdrFcShort( 0x20 ), /*
MIPS Stack size/offset = 32 */
#endif
#else
                            NdrFcShort( 0x20 ), /*
PPC Stack size/offset = 32 */
#endif
#else
                            NdrFcShort( 0x28 ), /*
Alpha Stack size/offset = 40 */
#endif
/* 112 */ NdrFcShort( 0x0 ),  /* 0 */
/* 114 */ NdrFcShort( 0x8 ),  /* 8 */
/* 116 */ 0x7,               /* Oi2 Flags:  srv must
size, clt must size, has return, */
                            0x3,              /*
3 */

          /* Parameter txn_in */

/* 118 */ NdrFcShort( 0x8b ), /* Flags:  must size,
must free, in, by val, */
#ifndef _ALPHA_
#ifndef _PPC_
#if !defined(_MIPS_)
/* 120 */ NdrFcShort( 0x4 ),  /* x86 Stack
size/offset = 4 */
#else
                            NdrFcShort( 0x8 ),  /*
MIPS Stack size/offset = 8 */
#endif
#else
                            NdrFcShort( 0x8 ),  /*
PPC Stack size/offset = 8 */
#endif
#else
                            NdrFcShort( 0x8 ),  /*
Alpha Stack size/offset = 8 */
#endif
/* 122 */ NdrFcShort( 0x3c8 ),          /* Type
Offset=968 */

          /* Parameter txn_out */

/* 124 */ NdrFcShort( 0x4113 ),         /* Flags:
must size, must free, out, simple ref, srv alloc
size=16 */
#ifndef _ALPHA_
#ifndef _PPC_
```


©2005 Hewlett-Packard Company. All rights reserved.

```
#if !defined(_MIPS_)
/* 126 */ NdrFcShort( 0x14 ), /* x86 Stack
size/offset = 20 */
#else
                                NdrFcShort( 0x18 ), /*
MIPS Stack size/offset = 24 */
#endif
#else
                                NdrFcShort( 0x18 ), /*
PPC Stack size/offset = 24 */
#endif
#else
                                NdrFcShort( 0x18 ), /*
Alpha Stack size/offset = 24 */
#endif
/* 128 */ NdrFcShort( 0x3da ),          /* Type
Offset=986 */

          /* Return value */

/* 130 */ NdrFcShort( 0x70 ), /* Flags:  out, return,
base type, */
#ifndef _ALPHA_
#ifndef _PPC_
#if !defined(_MIPS_)
/* 132 */ NdrFcShort( 0x18 ), /* x86 Stack
size/offset = 24 */
#else
                                NdrFcShort( 0x1c ), /*
MIPS Stack size/offset = 28 */
#endif
#else
                                NdrFcShort( 0x1c ), /*
PPC Stack size/offset = 28 */
#endif
#else
                                NdrFcShort( 0x20 ), /*
Alpha Stack size/offset = 32 */
#endif
/* 134 */ 0x8,                  /* FC_LONG */
                                0x0,                /*
0 */

          /* Procedure OrderStatus */

/* 136 */ 0x33,                 /* FC_AUTO_HANDLE */
                                0x6c,               /*
Old Flags:  object, Oi2 */
/* 138 */ NdrFcLong( 0x0 ),   /* 0 */
/* 142 */ NdrFcShort( 0x7 ),  /* 7 */
#ifndef _ALPHA_
#ifndef _PPC_
#if !defined(_MIPS_)
/* 144 */ NdrFcShort( 0x1c ), /* x86 Stack
size/offset = 28 */
#else
                                NdrFcShort( 0x20 ), /*
MIPS Stack size/offset = 32 */
#endif
#else
                                NdrFcShort( 0x20 ), /*
PPC Stack size/offset = 32 */
#endif
#else
                                NdrFcShort( 0x28 ), /*
Alpha Stack size/offset = 40 */
#endif
/* 146 */ NdrFcShort( 0x0 ),  /* 0 */
/* 148 */ NdrFcShort( 0x8 ),  /* 8 */
/* 150 */ 0x7,                /* Oi2 Flags:  srv must
size, clt must size, has return, */
                                0x3,                /*
3 */

          /* Parameter txn_in */

/* 152 */ NdrFcShort( 0x8b ), /* Flags:  must size,
must free, in, by val, */
#ifndef _ALPHA_
#ifndef _PPC_
#if !defined(_MIPS_)
/* 154 */ NdrFcShort( 0x4 ),  /* x86 Stack
size/offset = 4 */
#else
                                NdrFcShort( 0x8 ),  /*
MIPS Stack size/offset = 8 */
#endif
#else
                                NdrFcShort( 0x8 ),  /*
PPC Stack size/offset = 8 */
#endif
#else
                                NdrFcShort( 0x8 ),  /*
Alpha Stack size/offset = 8 */
#endif
/* 156 */ NdrFcShort( 0x3c8 ),          /* Type
Offset=968 */

          /* Parameter txn_out */

/* 158 */ NdrFcShort( 0x4113 ),         /* Flags:
must size, must free, out, simple ref, srv alloc
size=16 */
#ifndef _ALPHA_
#ifndef _PPC_
#if !defined(_MIPS_)
/* 160 */ NdrFcShort( 0x14 ), /* x86 Stack
size/offset = 20 */
#else
                                NdrFcShort( 0x18 ), /*
MIPS Stack size/offset = 24 */
#endif
#else
                                NdrFcShort( 0x18 ), /*
PPC Stack size/offset = 24 */
#endif
#else
                                NdrFcShort( 0x18 ), /*
Alpha Stack size/offset = 24 */
#endif
/* 162 */ NdrFcShort( 0x3da ),          /* Type
Offset=986 */

          /* Return value */

/* 164 */ NdrFcShort( 0x70 ), /* Flags:  out, return,
base type, */
#ifndef _ALPHA_
#ifndef _PPC_
#if !defined(_MIPS_)
/* 166 */ NdrFcShort( 0x18 ), /* x86 Stack
size/offset = 24 */
#else
                                NdrFcShort( 0x1c ), /*
MIPS Stack size/offset = 28 */
#endif
#else
                                NdrFcShort( 0x1c ), /*
PPC Stack size/offset = 28 */
#endif
#else
                                NdrFcShort( 0x20 ), /*
Alpha Stack size/offset = 32 */
#endif
/* 168 */ 0x8,                  /* FC_LONG */
                                0x0,                /*
0 */

          /* Procedure CallSetComplete */

/* 170 */ 0x33,                 /* FC_AUTO_HANDLE */
                                0x6c,               /*
Old Flags:  object, Oi2 */
/* 172 */ NdrFcLong( 0x0 ),   /* 0 */
/* 176 */ NdrFcShort( 0x8 ),  /* 8 */
#ifndef _ALPHA_
/* 178 */ NdrFcShort( 0x8 ),  /* x86, MIPS, PPC Stack
size/offset = 8 */
#else
                                NdrFcShort( 0x10 ), /*
Alpha Stack size/offset = 16 */
#endif
/* 180 */ NdrFcShort( 0x0 ),  /* 0 */
/* 182 */ NdrFcShort( 0x8 ),  /* 8 */
/* 184 */ 0x4,                  /* Oi2 Flags:  has
return, */
                                0x1,                /*
1 */

          /* Return value */

/* 186 */ NdrFcShort( 0x70 ), /* Flags:  out, return,
base type, */
#ifndef _ALPHA_
/* 188 */ NdrFcShort( 0x4 ),  /* x86, MIPS, PPC Stack
size/offset = 4 */
#else
                                NdrFcShort( 0x8 ),  /*
Alpha Stack size/offset = 8 */
#endif
/* 190 */ 0x8,                  /* FC_LONG */
                                0x0,                /*
0 */

                                0x0
        }
    };
```


©2005 Hewlett-Packard Company. All rights reserved.

```
static const MIDL_TYPE_FORMAT_STRING
__MIDL_TypeFormatString =
    {
        0,
        {
                                NdrFcShort( 0x0 ),  /*
0 */
/*  2 */
                                0x12, 0x0,          /*
FC_UP */
/*  4 */  NdrFcShort( 0x3b0 ),          /* Offset=
944 (948) */
/*  6 */
                                0x2b,               /*
FC_NON_ENCAPSULATED_UNION */
                                0x9,                /*
FC_ULONG */
/*  8 */  0x7,                /* Corr desc: FC_USHORT
*/
                                0x0,                /*
*/
/* 10 */  NdrFcShort( 0xfff8 ),         /* -8 */
/* 12 */  NdrFcShort( 0x2 ),  /* Offset= 2 (14) */
/* 14 */  NdrFcShort( 0x10 ), /* 16 */
/* 16 */  NdrFcShort( 0x2b ), /* 43 */
/* 18 */  NdrFcLong( 0x3 ),   /* 3 */
/* 22 */  NdrFcShort( 0x8008 ),         /* Simple arm
type: FC_LONG */
/* 24 */  NdrFcLong( 0x11 ),  /* 17 */
/* 28 */  NdrFcShort( 0x8001 ),         /* Simple arm
type: FC_BYTE */
/* 30 */  NdrFcLong( 0x2 ),   /* 2 */
/* 34 */  NdrFcShort( 0x8006 ),         /* Simple arm
type: FC_SHORT */
/* 36 */  NdrFcLong( 0x4 ),   /* 4 */
/* 40 */  NdrFcShort( 0x800a ),         /* Simple arm
type: FC_FLOAT */
/* 42 */  NdrFcLong( 0x5 ),   /* 5 */
/* 46 */  NdrFcShort( 0x800c ),         /* Simple arm
type: FC_DOUBLE */
/* 48 */  NdrFcLong( 0xb ),   /* 11 */
/* 52 */  NdrFcShort( 0x8006 ),         /* Simple arm
type: FC_SHORT */
/* 54 */  NdrFcLong( 0xa ),   /* 10 */
/* 58 */  NdrFcShort( 0x8008 ),         /* Simple arm
type: FC_LONG */
/* 60 */  NdrFcLong( 0x6 ),   /* 6 */
/* 64 */  NdrFcShort( 0xd6 ), /* Offset= 214 (278) */
/* 66 */  NdrFcLong( 0x7 ),   /* 7 */
/* 70 */  NdrFcShort( 0x800c ),         /* Simple arm
type: FC_DOUBLE */
/* 72 */  NdrFcLong( 0x8 ),   /* 8 */
/* 76 */  NdrFcShort( 0xd0 ), /* Offset= 208 (284) */
/* 78 */  NdrFcLong( 0xd ),   /* 13 */
/* 82 */  NdrFcShort( 0xe2 ), /* Offset= 226 (308) */
/* 84 */  NdrFcLong( 0x9 ),   /* 9 */
/* 88 */  NdrFcShort( 0xee ), /* Offset= 238 (326) */
/* 90 */  NdrFcLong( 0x2000 ),          /* 8192 */
/* 94 */  NdrFcShort( 0xfa ), /* Offset= 250 (344) */
/* 96 */  NdrFcLong( 0x24 ),  /* 36 */
/* 100 */ NdrFcShort( 0x308 ),          /* Offset=
776 (876) */
/* 102 */ NdrFcLong( 0x4024 ),          /* 16420 */
/* 106 */ NdrFcShort( 0x302 ),          /* Offset=
770 (876) */
/* 108 */ NdrFcLong( 0x4011 ),          /* 16401 */
/* 112 */ NdrFcShort( 0x300 ),          /* Offset=
768 (880) */
/* 114 */ NdrFcLong( 0x4002 ),          /* 16386 */
/* 118 */ NdrFcShort( 0x2fe ),          /* Offset=
766 (884) */
/* 120 */ NdrFcLong( 0x4003 ),          /* 16387 */
/* 124 */ NdrFcShort( 0x2fc ),          /* Offset=
764 (888) */
/* 126 */ NdrFcLong( 0x4004 ),          /* 16388 */
/* 130 */ NdrFcShort( 0x2fa ),          /* Offset=
762 (892) */
/* 132 */ NdrFcLong( 0x4005 ),          /* 16389 */
/* 136 */ NdrFcShort( 0x2f8 ),          /* Offset=
760 (896) */
/* 138 */ NdrFcLong( 0x400b ),          /* 16395 */
/* 142 */ NdrFcShort( 0x2e6 ),          /* Offset=
742 (884) */
/* 144 */ NdrFcLong( 0x400a ),          /* 16394 */
/* 148 */ NdrFcShort( 0x2e4 ),          /* Offset=
740 (888) */
/* 150 */ NdrFcLong( 0x4006 ),          /* 16390 */
/* 154 */ NdrFcShort( 0x2ea ),          /* Offset=
746 (900) */
/* 156 */ NdrFcLong( 0x4007 ),          /* 16391 */
/* 160 */ NdrFcShort( 0x2e0 ),          /* Offset=
736 (896) */
/* 162 */ NdrFcLong( 0x4008 ),          /* 16392 */
/* 166 */ NdrFcShort( 0x2e2 ),          /* Offset=
738 (904) */
/* 168 */ NdrFcLong( 0x400d ),          /* 16397 */
/* 172 */ NdrFcShort( 0x2e0 ),          /* Offset=
736 (908) */
/* 174 */ NdrFcLong( 0x4009 ),          /* 16393 */
/* 178 */ NdrFcShort( 0x2de ),          /* Offset=
734 (912) */
/* 180 */ NdrFcLong( 0x6000 ),          /* 24576 */
/* 184 */ NdrFcShort( 0x2dc ),          /* Offset=
732 (916) */
/* 186 */ NdrFcLong( 0x400c ),          /* 16396 */
/* 190 */ NdrFcShort( 0x2da ),          /* Offset=
730 (920) */
/* 192 */ NdrFcLong( 0x10 ),  /* 16 */
/* 196 */ NdrFcShort( 0x8002 ),         /* Simple arm
type: FC_CHAR */
/* 198 */ NdrFcLong( 0x12 ),  /* 18 */
/* 202 */ NdrFcShort( 0x8006 ),         /* Simple arm
type: FC_SHORT */
/* 204 */ NdrFcLong( 0x13 ),  /* 19 */
/* 208 */ NdrFcShort( 0x8008 ),         /* Simple arm
type: FC_LONG */
/* 210 */ NdrFcLong( 0x16 ),  /* 22 */
/* 214 */ NdrFcShort( 0x8008 ),         /* Simple arm
type: FC_LONG */
/* 216 */ NdrFcLong( 0x17 ),  /* 23 */
/* 220 */ NdrFcShort( 0x8008 ),         /* Simple arm
type: FC_LONG */
/* 222 */ NdrFcLong( 0xe ),   /* 14 */
/* 226 */ NdrFcShort( 0x2be ),          /* Offset=
702 (928) */
/* 228 */ NdrFcLong( 0x400e ),          /* 16398 */
/* 232 */ NdrFcShort( 0x2c4 ),          /* Offset=
708 (940) */
/* 234 */ NdrFcLong( 0x4010 ),          /* 16400 */
/* 238 */ NdrFcShort( 0x2c2 ),          /* Offset=
706 (944) */
/* 240 */ NdrFcLong( 0x4012 ),          /* 16402 */
/* 244 */ NdrFcShort( 0x280 ),          /* Offset=
640 (884) */
/* 246 */ NdrFcLong( 0x4013 ),          /* 16403 */
/* 250 */ NdrFcShort( 0x27e ),          /* Offset=
638 (888) */
/* 252 */ NdrFcLong( 0x4016 ),          /* 16406 */
/* 256 */ NdrFcShort( 0x278 ),          /* Offset=
632 (888) */
/* 258 */ NdrFcLong( 0x4017 ),          /* 16407 */
/* 262 */ NdrFcShort( 0x272 ),          /* Offset=
626 (888) */
/* 264 */ NdrFcLong( 0x0 ),   /* 0 */
/* 268 */ NdrFcShort( 0x0 ),  /* Offset= 0 (268) */
/* 270 */ NdrFcLong( 0x1 ),   /* 1 */
/* 274 */ NdrFcShort( 0x0 ),  /* Offset= 0 (274) */
/* 276 */ NdrFcShort( 0xffffffff ),     /* Offset= -1
(275) */
/* 278 */
                                0x15,               /*
FC_STRUCT */
                                0x7,                /*
7 */
/* 280 */ NdrFcShort( 0x8 ),  /* 8 */
/* 282 */ 0xb,                /* FC_HYPER */
                                0x5b,               /*
FC_END */
/* 284 */
                                0x12, 0x0,          /*
FC_UP */
/* 286 */ NdrFcShort( 0xc ),  /* Offset= 12 (298) */
/* 288 */
                                0x1b,               /*
FC_CARRAY */
                                0x1,                /*
1 */
/* 290 */ NdrFcShort( 0x2 ),  /* 2 */
/* 292 */ 0x9,                /* Corr desc: FC_ULONG
*/
                                0x0,                /*
*/
/* 294 */ NdrFcShort( 0xfffc ),         /* -4 */
/* 296 */ 0x6,                /* FC_SHORT */
                                0x5b,               /*
FC_END */
/* 298 */
                                0x17,               /*
FC_CSTRUCT */
                                0x3,                /*
3 */
/* 300 */ NdrFcShort( 0x8 ),  /* 8 */
/* 302 */ NdrFcShort( 0xfffffff2 ),     /* Offset= -
14 (288) */
/* 304 */ 0x8,                /* FC_LONG */
                                0x8,                /*
FC_LONG */
/* 306 */ 0x5c,               /* FC_PAD */
```


©2005 Hewlett-Packard Company. All rights reserved.

```
                                0x5b,               /*
FC_END */
/* 308 */
                                0x2f,               /*
FC_IP */
                                0x5a,               /*
FC_CONSTANT_IID */
/* 310 */ NdrFcLong( 0x0 ),   /* 0 */
/* 314 */ NdrFcShort( 0x0 ),  /* 0 */
/* 316 */ NdrFcShort( 0x0 ),  /* 0 */
/* 318 */ 0xc0,               /* 192 */
                                0x0,                /*
0 */
/* 320 */ 0x0,                /* 0 */
                                0x0,                /*
0 */
/* 322 */ 0x0,                /* 0 */
                                0x0,                /*
0 */
/* 324 */ 0x0,                /* 0 */
                                0x46,               /*
70 */
/* 326 */
                                0x2f,               /*
FC_IP */
                                0x5a,               /*
FC_CONSTANT_IID */
/* 328 */ NdrFcLong( 0x20400 ),         /* 132096 */
/* 332 */ NdrFcShort( 0x0 ),  /* 0 */
/* 334 */ NdrFcShort( 0x0 ),  /* 0 */
/* 336 */ 0xc0,               /* 192 */
                                0x0,                /*
0 */
/* 338 */ 0x0,                /* 0 */
                                0x0,                /*
0 */
/* 340 */ 0x0,                /* 0 */
                                0x0,                /*
0 */
/* 342 */ 0x0,                /* 0 */
                                0x46,               /*
70 */
/* 344 */
                                0x12, 0x10,         /*
FC_UP [pointer_deref] */
/* 346 */ NdrFcShort( 0x2 ),  /* Offset= 2 (348) */
/* 348 */
                                0x12, 0x0,          /*
FC_UP */
/* 350 */ NdrFcShort( 0x1fc ),          /* Offset=
508 (858) */
/* 352 */
                                0x2a,               /*
FC_ENCAPSULATED_UNION */
                                0x49,               /*
73 */
/* 354 */ NdrFcShort( 0x18 ), /* 24 */
/* 356 */ NdrFcShort( 0xa ),  /* 10 */
/* 358 */ NdrFcLong( 0x8 ),   /* 8 */
/* 362 */ NdrFcShort( 0x58 ), /* Offset= 88 (450) */
/* 364 */ NdrFcLong( 0xd ),   /* 13 */
/* 368 */ NdrFcShort( 0x78 ), /* Offset= 120 (488) */
/* 370 */ NdrFcLong( 0x9 ),   /* 9 */
/* 374 */ NdrFcShort( 0x94 ), /* Offset= 148 (522) */
/* 376 */ NdrFcLong( 0xc ),   /* 12 */
/* 380 */ NdrFcShort( 0xbc ), /* Offset= 188 (568) */
/* 382 */ NdrFcLong( 0x24 ),  /* 36 */
/* 386 */ NdrFcShort( 0x114 ),          /* Offset=
276 (662) */
/* 388 */ NdrFcLong( 0x800d ),          /* 32781 */
/* 392 */ NdrFcShort( 0x130 ),          /* Offset=
304 (696) */
/* 394 */ NdrFcLong( 0x10 ),  /* 16 */
/* 398 */ NdrFcShort( 0x148 ),          /* Offset=
328 (726) */
/* 400 */ NdrFcLong( 0x2 ),   /* 2 */
/* 404 */ NdrFcShort( 0x160 ),          /* Offset=
352 (756) */
/* 406 */ NdrFcLong( 0x3 ),   /* 3 */
/* 410 */ NdrFcShort( 0x178 ),          /* Offset=
376 (786) */
/* 412 */ NdrFcLong( 0x14 ),  /* 20 */
/* 416 */ NdrFcShort( 0x190 ),          /* Offset=
400 (816) */
/* 418 */ NdrFcShort( 0xffffffff ),     /* Offset= -1
(417) */
/* 420 */
                                0x1b,               /*
FC_CARRAY */
                                0x3,                /*
3 */
/* 422 */ NdrFcShort( 0x4 ),  /* 4 */
/* 424 */ 0x19,               /* Corr desc:  field
pointer, FC_ULONG */
                                0x0,                /*
*/
/* 426 */ NdrFcShort( 0x0 ),  /* 0 */
/* 428 */
                                0x4b,               /*
FC_PP */
                                0x5c,               /*
FC_PAD */
/* 430 */
                                0x48,               /*
FC_VARIABLE_REPEAT */
                                0x49,               /*
FC_FIXED_OFFSET */
/* 432 */ NdrFcShort( 0x4 ),  /* 4 */
/* 434 */ NdrFcShort( 0x0 ),  /* 0 */
/* 436 */ NdrFcShort( 0x1 ),  /* 1 */
/* 438 */ NdrFcShort( 0x0 ),  /* 0 */
/* 440 */ NdrFcShort( 0x0 ),  /* 0 */
/* 442 */ 0x12, 0x0,          /* FC_UP */
/* 444 */ NdrFcShort( 0xffffff6e ),     /* Offset= -
146 (298) */
/* 446 */
                                0x5b,               /*
FC_END */


                                0x8,                /*
FC_LONG */
/* 448 */ 0x5c,               /* FC_PAD */
                                0x5b,               /*
FC_END */
/* 450 */
                                0x16,               /*
FC_PSTRUCT */
                                0x3,                /*
3 */
/* 452 */ NdrFcShort( 0x8 ),  /* 8 */
/* 454 */
                                0x4b,               /*
FC_PP */
                                0x5c,               /*
FC_PAD */
/* 456 */
                                0x46,               /*
FC_NO_REPEAT */
                                0x5c,               /*
FC_PAD */
/* 458 */ NdrFcShort( 0x4 ),  /* 4 */
/* 460 */ NdrFcShort( 0x4 ),  /* 4 */
/* 462 */ 0x11, 0x0,          /* FC_RP */
/* 464 */ NdrFcShort( 0xffffffd4 ),     /* Offset= -
44 (420) */
/* 466 */
                                0x5b,               /*
FC_END */

                                0x8,                /*
FC_LONG */
/* 468 */ 0x8,                /* FC_LONG */
                                0x5b,               /*
FC_END */
/* 470 */
                                0x21,               /*
FC_BOGUS_ARRAY */
                                0x3,                /*
3 */
/* 472 */ NdrFcShort( 0x0 ),  /* 0 */
/* 474 */ 0x19,               /* Corr desc:  field
pointer, FC_ULONG */
                                0x0,                /*
*/
/* 476 */ NdrFcShort( 0x0 ),  /* 0 */
/* 478 */ NdrFcLong( 0xffffffff ),      /* -1 */
/* 482 */ 0x4c,               /* FC_EMBEDDED_COMPLEX
*/
                                0x0,                /*
0 */
/* 484 */ NdrFcShort( 0xffffff50 ),     /* Offset= -
176 (308) */
/* 486 */ 0x5c,               /* FC_PAD */
                                0x5b,               /*
FC_END */
/* 488 */
                                0x1a,               /*
FC_BOGUS_STRUCT */
                                0x3,                /*
3 */
/* 490 */ NdrFcShort( 0x8 ),  /* 8 */
/* 492 */ NdrFcShort( 0x0 ),  /* 0 */
/* 494 */ NdrFcShort( 0x6 ),  /* Offset= 6 (500) */
/* 496 */ 0x8,                /* FC_LONG */
                                0x36,               /*
FC_POINTER */
/* 498 */ 0x5c,               /* FC_PAD */
```


©2005 Hewlett-Packard Company. All rights reserved.

```
                                0x5b,               /*
FC_END */
/* 500 */
                                0x11, 0x0,          /*
FC_RP */
/* 502 */ NdrFcShort( 0xffffffe0 ),     /* Offset= -
32 (470) */
/* 504 */
                                0x21,               /*
FC_BOGUS_ARRAY */
                                0x3,                /*
3 */
/* 506 */ NdrFcShort( 0x0 ),  /* 0 */
/* 508 */ 0x19,               /* Corr desc:  field
pointer, FC_ULONG */
                                0x0,                /*
*/
/* 510 */ NdrFcShort( 0x0 ),  /* 0 */
/* 512 */ NdrFcLong( 0xffffffff ),      /* -1 */
/* 516 */ 0x4c,               /* FC_EMBEDDED_COMPLEX
*/
                                0x0,                /*
0 */
/* 518 */ NdrFcShort( 0xffffff40 ),     /* Offset= -
192 (326) */
/* 520 */ 0x5c,               /* FC_PAD */
                                0x5b,               /*
FC_END */
/* 522 */
                                0x1a,               /*
FC_BOGUS_STRUCT */
                                0x3,                /*
3 */
/* 524 */ NdrFcShort( 0x8 ),  /* 8 */
/* 526 */ NdrFcShort( 0x0 ),  /* 0 */
/* 528 */ NdrFcShort( 0x6 ),  /* Offset= 6 (534) */
/* 530 */ 0x8,                /* FC_LONG */
                                0x36,               /*
FC_POINTER */
/* 532 */ 0x5c,               /* FC_PAD */
                                0x5b,               /*
FC_END */
/* 534 */
                                0x11, 0x0,          /*
FC_RP */
/* 536 */ NdrFcShort( 0xffffffe0 ),     /* Offset= -
32 (504) */
/* 538 */
                                0x1b,               /*
FC_CARRAY */
                                0x3,                /*
3 */
/* 540 */ NdrFcShort( 0x4 ),  /* 4 */
/* 542 */ 0x19,               /* Corr desc:  field
pointer, FC_ULONG */
                                0x0,                /*
*/
/* 544 */ NdrFcShort( 0x0 ),  /* 0 */
/* 546 */
                                0x4b,               /*
FC_PP */
                                0x5c,               /*
FC_PAD */
/* 548 */
                                0x48,               /*
FC_VARIABLE_REPEAT */
                                0x49,               /*
FC_FIXED_OFFSET */
/* 550 */ NdrFcShort( 0x4 ),  /* 4 */
/* 552 */ NdrFcShort( 0x0 ),  /* 0 */
/* 554 */ NdrFcShort( 0x1 ),  /* 1 */
/* 556 */ NdrFcShort( 0x0 ),  /* 0 */
/* 558 */ NdrFcShort( 0x0 ),  /* 0 */
/* 560 */ 0x12, 0x0,          /* FC_UP */
/* 562 */ NdrFcShort( 0x182 ),          /* Offset=
386 (948) */
/* 564 */
                                0x5b,               /*
FC_END */

                                0x8,                /*
FC_LONG */
/* 566 */ 0x5c,               /* FC_PAD */
                                0x5b,               /*
FC_END */
/* 568 */
                                0x1a,               /*
FC_BOGUS_STRUCT */
                                0x3,                /*
3 */
/* 570 */ NdrFcShort( 0x8 ),  /* 8 */
/* 572 */ NdrFcShort( 0x0 ),  /* 0 */
/* 574 */ NdrFcShort( 0x6 ),  /* Offset= 6 (580) */
/* 576 */ 0x8,                /* FC_LONG */
                                0x36,               /*
FC_POINTER */
/* 578 */ 0x5c,               /* FC_PAD */
                                0x5b,               /*
FC_END */
/* 580 */
                                0x11, 0x0,          /*
FC_RP */
/* 582 */ NdrFcShort( 0xffffffd4 ),     /* Offset= -
44 (538) */
/* 584 */
                                0x2f,               /*
FC_IP */
                                0x5a,               /*
FC_CONSTANT_IID */
/* 586 */ NdrFcLong( 0x2f ),  /* 47 */
/* 590 */ NdrFcShort( 0x0 ),  /* 0 */
/* 592 */ NdrFcShort( 0x0 ),  /* 0 */
/* 594 */ 0xc0,               /* 192 */
                                0x0,                /*
0 */
/* 596 */ 0x0,                /* 0 */
                                0x0,                /*
0 */
/* 598 */ 0x0,                /* 0 */
                                0x0,                /*
0 */
/* 600 */ 0x0,                /* 0 */
                                0x46,               /*
70 */
/* 602 */
                                0x1b,               /*
FC_CARRAY */
                                0x0,                /*
0 */
/* 604 */ NdrFcShort( 0x1 ),  /* 1 */
/* 606 */ 0x19,               /* Corr desc:  field
pointer, FC_ULONG */
                                0x0,                /*
*/
/* 608 */ NdrFcShort( 0x4 ),  /* 4 */
/* 610 */ 0x1,                /* FC_BYTE */
                                0x5b,               /*
FC_END */
/* 612 */
                                0x1a,               /*
FC_BOGUS_STRUCT */
                                0x3,                /*
3 */
/* 614 */ NdrFcShort( 0x10 ), /* 16 */
/* 616 */ NdrFcShort( 0x0 ),  /* 0 */
/* 618 */ NdrFcShort( 0xa ),  /* Offset= 10 (628) */
/* 620 */ 0x8,                /* FC_LONG */
                                0x8,                /*
FC_LONG */
/* 622 */ 0x4c,               /* FC_EMBEDDED_COMPLEX
*/
                                0x0,                /*
0 */
/* 624 */ NdrFcShort( 0xffffffd8 ),     /* Offset= -
40 (584) */
/* 626 */ 0x36,               /* FC_POINTER */
                                0x5b,               /*
FC_END */
/* 628 */
                                0x12, 0x0,          /*
FC_UP */
/* 630 */ NdrFcShort( 0xffffffe4 ),     /* Offset= -
28 (602) */
/* 632 */
                                0x1b,               /*
FC_CARRAY */
                                0x3,                /*
3 */
/* 634 */ NdrFcShort( 0x4 ),  /* 4 */
/* 636 */ 0x19,               /* Corr desc:  field
pointer, FC_ULONG */
                                0x0,                /*
*/
/* 638 */ NdrFcShort( 0x0 ),  /* 0 */
/* 640 */
                                0x4b,               /*
FC_PP */
                                0x5c,               /*
FC_PAD */
/* 642 */
                                0x48,               /*
FC_VARIABLE_REPEAT */
                                0x49,               /*
FC_FIXED_OFFSET */
/* 644 */ NdrFcShort( 0x4 ),  /* 4 */
/* 646 */ NdrFcShort( 0x0 ),  /* 0 */
/* 648 */ NdrFcShort( 0x1 ),  /* 1 */
/* 650 */ NdrFcShort( 0x0 ),  /* 0 */
```


©2005 Hewlett-Packard Company. All rights reserved.

```
/* 652 */ NdrFcShort( 0x0 ),  /* 0 */
/* 654 */ 0x12, 0x0,          /* FC_UP */
/* 656 */ NdrFcShort( 0xffffffd4 ),     /* Offset= -
44 (612) */
/* 658 */
                              0x5b,               /*
FC_END */

                              0x8,                /*
FC_LONG */
/* 660 */ 0x5c,               /* FC_PAD */
                              0x5b,               /*
FC_END */
/* 662 */
                              0x1a,               /*
FC_BOGUS_STRUCT */
                              0x3,                /*
3 */
/* 664 */ NdrFcShort( 0x8 ),  /* 8 */
/* 666 */ NdrFcShort( 0x0 ),  /* 0 */
/* 668 */ NdrFcShort( 0x6 ),  /* Offset= 6 (674) */
/* 670 */ 0x8,                /* FC_LONG */
                              0x36,               /*
FC_POINTER */
/* 672 */ 0x5c,               /* FC_PAD */
                              0x5b,               /*
FC_END */
/* 674 */
                              0x11, 0x0,          /*
FC_RP */
/* 676 */ NdrFcShort( 0xffffffd4 ),     /* Offset= -
44 (632) */
/* 678 */
                              0x1d,               /*
FC_SMFARRAY */
                              0x0,                /*
0 */
/* 680 */ NdrFcShort( 0x8 ),  /* 8 */
/* 682 */ 0x1,                /* FC_BYTE */
                              0x5b,               /*
FC_END */
/* 684 */
                              0x15,               /*
FC_STRUCT */
                              0x3,                /*
3 */
/* 686 */ NdrFcShort( 0x10 ), /* 16 */
/* 688 */ 0x8,                /* FC_LONG */
                              0x6,                /*
FC_SHORT */
/* 690 */ 0x6,                /* FC_SHORT */
                              0x4c,               /*
FC_EMBEDDED_COMPLEX */
/* 692 */ 0x0,                /* 0 */
                              NdrFcShort( 0xfffffff1
),        /* Offset= -15 (678) */
                              0x5b,               /*
FC_END */
/* 696 */
                              0x1a,               /*
FC_BOGUS_STRUCT */
                              0x3,                /*
3 */
/* 698 */ NdrFcShort( 0x18 ), /* 24 */
/* 700 */ NdrFcShort( 0x0 ),  /* 0 */
/* 702 */ NdrFcShort( 0xa ),  /* Offset= 10 (712) */
/* 704 */ 0x8,                /* FC_LONG */
                              0x36,               /*
FC_POINTER */
/* 706 */ 0x4c,               /* FC_EMBEDDED_COMPLEX
*/
                              0x0,                /*
0 */
/* 708 */ NdrFcShort( 0xffffffe8 ),     /* Offset= -
24 (684) */
/* 710 */ 0x5c,               /* FC_PAD */
                              0x5b,               /*
FC_END */
/* 712 */
                              0x11, 0x0,          /*
FC_RP */
/* 714 */ NdrFcShort( 0xffffff0c ),     /* Offset= -
244 (470) */
/* 716 */
                              0x1b,               /*
FC_CARRAY */
                              0x0,                /*
0 */
/* 718 */ NdrFcShort( 0x1 ),  /* 1 */
/* 720 */ 0x19,               /* Corr desc:  field
pointer, FC_ULONG */
                              0x0,                /*
*/
/* 722 */ NdrFcShort( 0x0 ),  /* 0 */
/* 724 */ 0x1,                /* FC_BYTE */
                              0x5b,               /*
FC_END */
/* 726 */
                              0x16,               /*
FC_PSTRUCT */
                              0x3,                /*
3 */
/* 728 */ NdrFcShort( 0x8 ),  /* 8 */
/* 730 */
                              0x4b,               /*
FC_PP */
                              0x5c,               /*
FC_PAD */
/* 732 */
                              0x46,               /*
FC_NO_REPEAT */
                              0x5c,               /*
FC_PAD */
/* 734 */ NdrFcShort( 0x4 ),  /* 4 */
/* 736 */ NdrFcShort( 0x4 ),  /* 4 */
/* 738 */ 0x12, 0x0,          /* FC_UP */
/* 740 */ NdrFcShort( 0xffffffe8 ),     /* Offset= -
24 (716) */
/* 742 */
                              0x5b,               /*
FC_END */

                              0x8,                /*
FC_LONG */
/* 744 */ 0x8,                /* FC_LONG */
                              0x5b,               /*
FC_END */
/* 746 */
                              0x1b,               /*
FC_CARRAY */
                              0x1,                /*
1 */
/* 748 */ NdrFcShort( 0x2 ),  /* 2 */
/* 750 */ 0x19,               /* Corr desc:  field
pointer, FC_ULONG */
                              0x0,                /*
*/
/* 752 */ NdrFcShort( 0x0 ),  /* 0 */
/* 754 */ 0x6,                /* FC_SHORT */
                              0x5b,               /*
FC_END */
/* 756 */
                              0x16,               /*
FC_PSTRUCT */
                              0x3,                /*
3 */
/* 758 */ NdrFcShort( 0x8 ),  /* 8 */
/* 760 */
                              0x4b,               /*
FC_PP */
                              0x5c,               /*
FC_PAD */
/* 762 */
                              0x46,               /*
FC_NO_REPEAT */
                              0x5c,               /*
FC_PAD */
/* 764 */ NdrFcShort( 0x4 ),  /* 4 */
/* 766 */ NdrFcShort( 0x4 ),  /* 4 */
/* 768 */ 0x12, 0x0,          /* FC_UP */
/* 770 */ NdrFcShort( 0xffffffe8 ),     /* Offset= -
24 (746) */
/* 772 */
                              0x5b,               /*
FC_END */

                              0x8,                /*
FC_LONG */
/* 774 */ 0x8,                /* FC_LONG */
                              0x5b,               /*
FC_END */
/* 776 */
                              0x1b,               /*
FC_CARRAY */
                              0x3,                /*
3 */
/* 778 */ NdrFcShort( 0x4 ),  /* 4 */
/* 780 */ 0x19,               /* Corr desc:  field
pointer, FC_ULONG */
                              0x0,                /*
*/
/* 782 */ NdrFcShort( 0x0 ),  /* 0 */
/* 784 */ 0x8,                /* FC_LONG */
                              0x5b,               /*
FC_END */
/* 786 */
                              0x16,               /*
FC_PSTRUCT */
```


©2005 Hewlett-Packard Company. All rights reserved.

```
                                0x3,                /*
3 */
/* 788 */ NdrFcShort( 0x8 ),  /* 8 */
/* 790 */
                                0x4b,               /*
FC_PP */
                                0x5c,               /*
FC_PAD */
/* 792 */
                                0x46,               /*
FC_NO_REPEAT */
                                0x5c,               /*
FC_PAD */
/* 794 */ NdrFcShort( 0x4 ),  /* 4 */
/* 796 */ NdrFcShort( 0x4 ),  /* 4 */
/* 798 */ 0x12, 0x0,          /* FC_UP */
/* 800 */ NdrFcShort( 0xffffffe8 ),     /* Offset= -
24 (776) */
/* 802 */
                                0x5b,               /*
FC_END */

                                0x8,                /*
FC_LONG */
/* 804 */ 0x8,                /* FC_LONG */
                                0x5b,               /*
FC_END */
/* 806 */
                                0x1b,               /*
FC_CARRAY */
                                0x7,                /*
7 */
/* 808 */ NdrFcShort( 0x8 ),  /* 8 */
/* 810 */ 0x19,               /* Corr desc:  field
pointer, FC_ULONG */
                                0x0,                /*
*/
/* 812 */ NdrFcShort( 0x0 ),  /* 0 */
/* 814 */ 0xb,                /* FC_HYPER */
                                0x5b,               /*
FC_END */
/* 816 */
                                0x16,               /*
FC_PSTRUCT */
                                0x3,                /*
3 */
/* 818 */ NdrFcShort( 0x8 ),  /* 8 */
/* 820 */
                                0x4b,               /*
FC_PP */
                                0x5c,               /*
FC_PAD */
/* 822 */
                                0x46,               /*
FC_NO_REPEAT */
                                0x5c,               /*
FC_PAD */
/* 824 */ NdrFcShort( 0x4 ),  /* 4 */
/* 826 */ NdrFcShort( 0x4 ),  /* 4 */
/* 828 */ 0x12, 0x0,          /* FC_UP */
/* 830 */ NdrFcShort( 0xffffffe8 ),     /* Offset= -
24 (806) */
/* 832 */
                                0x5b,               /*
FC_END */

                                0x8,                /*
FC_LONG */
/* 834 */ 0x8,                /* FC_LONG */
                                0x5b,               /*
FC_END */
/* 836 */
                                0x15,               /*
FC_STRUCT */
                                0x3,                /*
3 */
/* 838 */ NdrFcShort( 0x8 ),  /* 8 */
/* 840 */ 0x8,                /* FC_LONG */
                                0x8,                /*
FC_LONG */
/* 842 */ 0x5c,               /* FC_PAD */
                                0x5b,               /*
FC_END */
/* 844 */
                                0x1b,               /*
FC_CARRAY */
                                0x3,                /*
3 */
/* 846 */ NdrFcShort( 0x8 ),  /* 8 */
/* 848 */ 0x7,                /* Corr desc: FC_USHORT
*/
                                0x0,                /*
*/
/* 850 */ NdrFcShort( 0xffd8 ),         /* -40 */
/* 852 */ 0x4c,               /* FC_EMBEDDED_COMPLEX
*/
                                0x0,                /*
0 */
/* 854 */ NdrFcShort( 0xffffffee ),     /* Offset= -
18 (836) */
/* 856 */ 0x5c,               /* FC_PAD */
                                0x5b,               /*
FC_END */
/* 858 */
                                0x1a,               /*
FC_BOGUS_STRUCT */
                                0x3,                /*
3 */
/* 860 */ NdrFcShort( 0x28 ), /* 40 */
/* 862 */ NdrFcShort( 0xffffffee ),     /* Offset= -
18 (844) */
/* 864 */ NdrFcShort( 0x0 ),  /* Offset= 0 (864) */
/* 866 */ 0x6,                /* FC_SHORT */
                                0x6,                /*
FC_SHORT */
/* 868 */ 0x38,               /* FC_ALIGNM4 */
                                0x8,                /*
FC_LONG */
/* 870 */ 0x8,                /* FC_LONG */
                                0x4c,               /*
FC_EMBEDDED_COMPLEX */
/* 872 */ 0x0,                /* 0 */
                                NdrFcShort( 0xfffffdf7
),        /* Offset= -521 (352) */
                                0x5b,               /*
FC_END */
/* 876 */
                                0x12, 0x0,          /*
FC_UP */
/* 878 */ NdrFcShort( 0xffffffef6 ),     /* Offset= -
266 (612) */
/* 880 */
                                0x12, 0x8,          /*
FC_UP [simple_pointer] */
/* 882 */ 0x1,                /* FC_BYTE */
                                0x5c,               /*
FC_PAD */
/* 884 */
                                0x12, 0x8,          /*
FC_UP [simple_pointer] */
/* 886 */ 0x6,                /* FC_SHORT */
                                0x5c,               /*
FC_PAD */
/* 888 */
                                0x12, 0x8,          /*
FC_UP [simple_pointer] */
/* 890 */ 0x8,                /* FC_LONG */
                                0x5c,               /*
FC_PAD */
/* 892 */
                                0x12, 0x8,          /*
FC_UP [simple_pointer] */
/* 894 */ 0xa,                /* FC_FLOAT */
                                0x5c,               /*
FC_PAD */
/* 896 */
                                0x12, 0x8,          /*
FC_UP [simple_pointer] */
/* 898 */ 0xc,                /* FC_DOUBLE */
                                0x5c,               /*
FC_PAD */
/* 900 */
                                0x12, 0x0,          /*
FC_UP */
/* 902 */ NdrFcShort( 0xffffffd90 ),     /* Offset= -
624 (278) */
/* 904 */
                                0x12, 0x10,         /*
FC_UP [pointer_deref] */
/* 906 */ NdrFcShort( 0xffffffd92 ),     /* Offset= -
622 (284) */
/* 908 */
                                0x12, 0x10,         /*
FC_UP [pointer_deref] */
/* 910 */ NdrFcShort( 0xffffffda6 ),     /* Offset= -
602 (308) */
/* 912 */
                                0x12, 0x10,         /*
FC_UP [pointer_deref] */
/* 914 */ NdrFcShort( 0xffffffdb4 ),     /* Offset= -
588 (326) */
/* 916 */
                                0x12, 0x10,         /*
FC_UP [pointer_deref] */
/* 918 */ NdrFcShort( 0xffffffdc2 ),     /* Offset= -
574 (344) */
/* 920 */
                                0x12, 0x10,         /*
FC_UP [pointer_deref] */
```


©2005 Hewlett-Packard Company. All rights reserved.

```
/* 922 */ NdrFcShort( 0x2 ),  /* Offset= 2 (924) */
/* 924 */
                             0x12, 0x0,          /*
FC_UP */
/* 926 */ NdrFcShort( 0x16 ), /* Offset= 22 (948) */
/* 928 */
                             0x15,               /*
FC_STRUCT */
                             0x7,                /*
7 */
/* 930 */ NdrFcShort( 0x10 ), /* 16 */
/* 932 */ 0x6,                /* FC_SHORT */
                             0x1,                /*
FC_BYTE */
/* 934 */ 0x1,                /* FC_BYTE */
                             0x38,               /*
FC_ALIGNM4 */
/* 936 */ 0x8,                /* FC_LONG */
                             0x39,               /*
FC_ALIGNM8 */
/* 938 */ 0xb,                /* FC_HYPER */
                             0x5b,               /*
FC_END */
/* 940 */
                             0x12, 0x0,          /*
FC_UP */
/* 942 */ NdrFcShort( 0xfffffff2 ),     /* Offset= -
14 (928) */
/* 944 */
                             0x12, 0x8,          /*
FC_UP [simple_pointer] */
/* 946 */ 0x2,                /* FC_CHAR */
                             0x5c,               /*
FC_PAD */
/* 948 */
                             0x1a,               /*
FC_BOGUS_STRUCT */
                             0x7,                /*
7 */
/* 950 */ NdrFcShort( 0x20 ), /* 32 */
/* 952 */ NdrFcShort( 0x0 ),  /* 0 */
/* 954 */ NdrFcShort( 0x0 ),  /* Offset= 0 (954) */
/* 956 */ 0x8,                /* FC_LONG */
                             0x8,                /*
FC_LONG */
/* 958 */ 0x6,                /* FC_SHORT */
                             0x6,                /*
FC_SHORT */
/* 960 */ 0x6,                /* FC_SHORT */
                             0x6,                /*
FC_SHORT */
/* 962 */ 0x4c,               /* FC_EMBEDDED_COMPLEX
*/
                             0x0,                /*
0 */
/* 964 */ NdrFcShort( 0xfffffc42 ),     /* Offset= -
958 (6) */
/* 966 */ 0x5c,               /* FC_PAD */
                             0x5b,               /*
FC_END */
/* 968 */ 0xb4,               /* FC_USER_MARSHAL */
                             0x83,               /*
131 */
/* 970 */ NdrFcShort( 0x0 ),  /* 0 */
/* 972 */ NdrFcShort( 0x10 ), /* 16 */
/* 974 */ NdrFcShort( 0x0 ),  /* 0 */
/* 976 */ NdrFcShort( 0xfffffc32 ),     /* Offset= -
974 (2) */
/* 978 */
                             0x11, 0x4,          /*
FC_RP [alloced_on_stack] */
/* 980 */ NdrFcShort( 0x6 ),  /* Offset= 6 (986) */
/* 982 */
                             0x13, 0x0,          /*
FC_OP */
/* 984 */ NdrFcShort( 0xfffffffdc ),     /* Offset= -
36 (948) */
/* 986 */ 0xb4,               /* FC_USER_MARSHAL */
                             0x83,               /*
131 */
/* 988 */ NdrFcShort( 0x0 ),  /* 0 */
/* 990 */ NdrFcShort( 0x10 ), /* 16 */
/* 992 */ NdrFcShort( 0x0 ),  /* 0 */
/* 994 */ NdrFcShort( 0xfffffff4 ),     /* Offset= -
12 (982) */

                             0x0
        }
    };

const CInterfaceProxyVtbl *
_tpcc_com_ps_ProxyVtblList[] =
{
    ( CInterfaceProxyVtbl *) &_ITPCCProxyVtbl,
    0
};

const CInterfaceStubVtbl *
_tpcc_com_ps_StubVtblList[] =
{
    ( CInterfaceStubVtbl *) &_ITPCCStubVtbl,
    0
};

PCInterfaceName const
_tpcc_com_ps_InterfaceNamesList[] =
{
    "ITPCC",
    0
};


#define _tpcc_com_ps_CHECK_IID(n)
          IID_GENERIC_CHECK_IID( _tpcc_com_ps, pIID,
n)

int __stdcall _tpcc_com_ps_IID_Lookup( const IID *
pIID, int * pIndex )
{

    if(!_tpcc_com_ps_CHECK_IID(0))
        {
        *pIndex = 0;
        return 1;
        }
    return 0;
}

const ExtendedProxyFileInfo tpcc_com_ps_ProxyFileInfo
=
{
    (PCInterfaceProxyVtblList *) &
_tpcc_com_ps_ProxyVtblList,
    (PCInterfaceStubVtblList *) &
_tpcc_com_ps_StubVtblList,
    (const PCInterfaceName * ) &
_tpcc_com_ps_InterfaceNamesList,
    0, // no delegation
    & _tpcc_com_ps_IID_Lookup,
    1,
    2,
    0, /* table of [async_uuid] interfaces */
    0, /* Filler1 */
    0, /* Filler2 */
    0  /* Filler3 */
};


#endif /* !defined(_M_IA64) && !defined(_M_AXP64)*/


#pragma warning( disable: 4049 )  /* more than 64k
source lines */

/* this ALWAYS GENERATED file contains the proxy stub
code */


 /* File created by MIDL compiler version 5.03.0280
*/
/* at Thu Dec 13 23:13:08 2001
 */
/* Compiler settings for .\src\tpcc_com_ps.idl:
    Oicf (OptLev=i2), W1, Zp8, env=Win64 (32b
run,appending), ms_ext, c_ext, robust
    error checks: allocation ref bounds_check enum
stub_data
    VC __declspec() decoration level:
         __declspec(uuid()), __declspec(selectany),
__declspec(novtable)
         DECLSPEC_UUID(), MIDL_INTERFACE()
*/
//@@MIDL_FILE_HEADING(  )

#if defined(_M_IA64) || defined(_M_AXP64)
#define USE_STUBLESS_PROXY


/* verify that the <rpcproxy.h> version is high
enough to compile this file*/
#ifndef __REDQ_RPCPROXY_H_VERSION__
#define __REQUIRED_RPCPROXY_H_VERSION__ 475
#endif


#include "rpcproxy.h"
#ifndef __RPCPROXY_H_VERSION__
```


©2005 Hewlett-Packard Company. All rights reserved.

```
#error this stub requires an updated version of
<rpcproxy.h>
#endif // __RPCPROXY_H_VERSION__


#include "tpcc_com_ps.h"

#define TYPE_FORMAT_STRING_SIZE   979
#define PROC_FORMAT_STRING_SIZE   253
#define TRANSMIT_AS_TABLE_SIZE    0
#define WIRE_MARSHAL_TABLE_SIZE   1

typedef struct _MIDL_TYPE_FORMAT_STRING
    {
    short          Pad;
    unsigned char  Format[ TYPE_FORMAT_STRING_SIZE ];
    } MIDL_TYPE_FORMAT_STRING;

typedef struct _MIDL_PROC_FORMAT_STRING
    {
    short          Pad;
    unsigned char  Format[ PROC_FORMAT_STRING_SIZE ];
    } MIDL_PROC_FORMAT_STRING;


extern const MIDL_TYPE_FORMAT_STRING
__MIDL_TypeFormatString;
extern const MIDL_PROC_FORMAT_STRING
__MIDL_ProcFormatString;


/* Standard interface: __MIDL_itf_tpcc_com_ps_0000,
ver. 0.0,

GUID={0x00000000,0x0000,0x0000,{0x00,0x00,0x00,0x00,0
x00,0x00,0x00,0x00}} */


/* Object interface: IUnknown, ver. 0.0,

GUID={0x00000000,0x0000,0x0000,{0xC0,0x00,0x00,0x00,0
x00,0x00,0x00,0x46}} */


/* Object interface: ITPCC, ver. 0.0,

GUID={0xFEEE6AA2,0x84B1,0x11d2,{0xBA,0x47,0x00,0xC0,0
x4F,0xBF,0xE0,0x8B}} */


extern const MIDL_STUB_DESC Object_StubDesc;


extern const MIDL_SERVER_INFO ITPCC_ServerInfo;

#pragma code_seg(".orpc")
static const unsigned short
ITPCC_FormatStringOffsetTable[] =
    {
    0,
    44,
    88,
    132,
    176,
    220
    };

static const MIDL_SERVER_INFO ITPCC_ServerInfo =
    {
    &Object_StubDesc,
    0,
    __MIDL_ProcFormatString.Format,
    &ITPCC_FormatStringOffsetTable[-3],
    0,
    0,
    0,
    0
    };

static const MIDL_STUBLESS_PROXY_INFO ITPCC_ProxyInfo
=
    {
    &Object_StubDesc,
    __MIDL_ProcFormatString.Format,
    &ITPCC_FormatStringOffsetTable[-3],
    0,
    0,
    0
    };


CINTERFACE_PROXY_VTABLE(9) _ITPCCProxyVtbl =
{
    &ITPCC_ProxyInfo,
    &IID_ITPCC,
    IUnknown_QueryInterface_Proxy,
    IUnknown_AddRef_Proxy,
    IUnknown_Release_Proxy ,
    (void *)-1 /* ITPCC::NewOrder */ ,
    (void *)-1 /* ITPCC::Payment */ ,
    (void *)-1 /* ITPCC::Delivery */ ,
    (void *)-1 /* ITPCC::StockLevel */ ,
    (void *)-1 /* ITPCC::OrderStatus */ ,
    (void *)-1 /* ITPCC::CallSetComplete */
};

const CInterfaceStubVtbl _ITPCCStubVtbl =
{
    &IID_ITPCC,
    &ITPCC_ServerInfo,
    9,
    0, /* pure interpreted */
    CStdStubBuffer_METHODS
};

extern const USER_MARSHAL_ROUTINE_QUADRUPLE
UserMarshalRoutines[ WIRE_MARSHAL_TABLE_SIZE ];

static const MIDL_STUB_DESC Object_StubDesc =
    {
    0,
    NdrOleAllocate,
    NdrOleFree,
    0,
    0,
    0,
    0,
    __MIDL_TypeFormatString.Format,
    1, /* -error bounds_check flag */
    0x50002, /* Ndr library version */
    0,
    0x5030118, /* MIDL Version 5.3.280 */
    0,
    UserMarshalRoutines,
    0,  /* notify & notify_flag routine table */
    0x1, /* MIDL flag */
    0,  /* Reserved3 */
    0,  /* Reserved4 */
    0   /* Reserved5 */
    };

#pragma data_seg(".rdata")

static const USER_MARSHAL_ROUTINE_QUADRUPLE
UserMarshalRoutines[ WIRE_MARSHAL_TABLE_SIZE ] =
        {

            {
            VARIANT_UserSize
            ,VARIANT_UserMarshal
            ,VARIANT_UserUnmarshal
            ,VARIANT_UserFree
            }

        };


#if !defined(__RPC_WIN64__)
#error  Invalid build platform for this stub.
#endif

static const MIDL_PROC_FORMAT_STRING
__MIDL_ProcFormatString =
    {
        0,
        {

          /* Procedure NewOrder */

                                0x33,               /*
FC_AUTO_HANDLE */
                                0x6c,               /*
Old Flags:  object, Oi2 */
/*  2 */  NdrFcLong( 0x0 ),   /* 0 */
/*  6 */  NdrFcShort( 0x3 ),  /* 3 */
#ifndef _ALPHA_
/*  8 */  NdrFcShort( 0x38 ), /* ia64 Stack
size/offset = 56 */
#else
                                NdrFcShort( 0x30 ), /*
axp64 Stack size/offset = 48 */
#endif
/* 10 */  NdrFcShort( 0x0 ),  /* 0 */
/* 12 */  NdrFcShort( 0x8 ),  /* 8 */
/* 14 */  0x47,               /* Oi2 Flags:  srv must
size, clt must size, has return, has ext, */
                                0x3,                /*
3 */
/* 16 */  0xa,                /* 10 */
```


©2005 Hewlett-Packard Company. All rights reserved.

```
                                0x7,                /*
Ext Flags:  new corr desc, clt corr check, srv corr
check, */
/* 18 */  NdrFcShort( 0x20 ), /* 32 */
/* 20 */  NdrFcShort( 0x20 ), /* 32 */
/* 22 */  NdrFcShort( 0x0 ),  /* 0 */
/* 24 */  NdrFcShort( 0x0 ),  /* 0 */

          /* Parameter txn_in */

/* 26 */  NdrFcShort( 0x8b ), /* Flags:  must size,
must free, in, by val, */
#ifndef _ALPHA_
/* 28 */  NdrFcShort( 0x10 ), /* ia64 Stack
size/offset = 16 */
#else
                                NdrFcShort( 0x8 ),  /*
axp64 Stack size/offset = 8 */
#endif
/* 30 */  NdrFcShort( 0x3b6 ),          /* Type
Offset=950 */

          /* Parameter txn_out */

/* 32 */  NdrFcShort( 0x6113 ),         /* Flags:
must size, must free, out, simple ref, srv alloc
size=24 */
#ifndef _ALPHA_
/* 34 */  NdrFcShort( 0x28 ), /* ia64 Stack
size/offset = 40 */
#else
                                NdrFcShort( 0x20 ), /*
axp64 Stack size/offset = 32 */
#endif
/* 36 */  NdrFcShort( 0x3c8 ),          /* Type
Offset=968 */

          /* Return value */

/* 38 */  NdrFcShort( 0x70 ), /* Flags:  out, return,
base type, */
#ifndef _ALPHA_
/* 40 */  NdrFcShort( 0x30 ), /* ia64 Stack
size/offset = 48 */
#else
                                NdrFcShort( 0x28 ), /*
axp64 Stack size/offset = 40 */
#endif
/* 42 */  0x8,                /* FC_LONG */
                                0x0,                /*
0 */

          /* Procedure Payment */

/* 44 */  0x33,               /* FC_AUTO_HANDLE */
                                0x6c,               /*
Old Flags:  object, Oi2 */
/* 46 */  NdrFcLong( 0x0 ),   /* 0 */
/* 50 */  NdrFcShort( 0x4 ),  /* 4 */
#ifndef _ALPHA_
/* 52 */  NdrFcShort( 0x38 ), /* ia64 Stack
size/offset = 56 */
#else
                                NdrFcShort( 0x30 ), /*
axp64 Stack size/offset = 48 */
#endif
/* 54 */  NdrFcShort( 0x0 ),  /* 0 */
/* 56 */  NdrFcShort( 0x8 ),  /* 8 */
/* 58 */  0x47,               /* Oi2 Flags:  srv must
size, clt must size, has return, has ext, */
                                0x3,                /*
3 */
/* 60 */  0xa,                /* 10 */
                                0x7,                /*
Ext Flags:  new corr desc, clt corr check, srv corr
check, */
/* 62 */  NdrFcShort( 0x20 ), /* 32 */
/* 64 */  NdrFcShort( 0x20 ), /* 32 */
/* 66 */  NdrFcShort( 0x0 ),  /* 0 */
/* 68 */  NdrFcShort( 0x0 ),  /* 0 */

          /* Parameter txn_in */

/* 70 */  NdrFcShort( 0x8b ), /* Flags:  must size,
must free, in, by val, */
#ifndef _ALPHA_
/* 72 */  NdrFcShort( 0x10 ), /* ia64 Stack
size/offset = 16 */
#else
                                NdrFcShort( 0x8 ),  /*
axp64 Stack size/offset = 8 */
#endif
/* 74 */  NdrFcShort( 0x3b6 ),          /* Type
Offset=950 */

          /* Parameter txn_out */

/* 76 */  NdrFcShort( 0x6113 ),         /* Flags:
must size, must free, out, simple ref, srv alloc
size=24 */
#ifndef _ALPHA_
/* 78 */  NdrFcShort( 0x28 ), /* ia64 Stack
size/offset = 40 */
#else
                                NdrFcShort( 0x20 ), /*
axp64 Stack size/offset = 32 */
#endif
/* 80 */  NdrFcShort( 0x3c8 ),          /* Type
Offset=968 */

          /* Return value */

/* 82 */  NdrFcShort( 0x70 ), /* Flags:  out, return,
base type, */
#ifndef _ALPHA_
/* 84 */  NdrFcShort( 0x30 ), /* ia64 Stack
size/offset = 48 */
#else
                                NdrFcShort( 0x28 ), /*
axp64 Stack size/offset = 40 */
#endif
/* 86 */  0x8,                /* FC_LONG */
                                0x0,                /*
0 */

          /* Procedure Delivery */

/* 88 */  0x33,               /* FC_AUTO_HANDLE */
                                0x6c,               /*
Old Flags:  object, Oi2 */
/* 90 */  NdrFcLong( 0x0 ),   /* 0 */
/* 94 */  NdrFcShort( 0x5 ),  /* 5 */
#ifndef _ALPHA_
/* 96 */  NdrFcShort( 0x38 ), /* ia64 Stack
size/offset = 56 */
#else
                                NdrFcShort( 0x30 ), /*
axp64 Stack size/offset = 48 */
#endif
/* 98 */  NdrFcShort( 0x0 ),  /* 0 */
/* 100 */ NdrFcShort( 0x8 ),  /* 8 */
/* 102 */ 0x47,               /* Oi2 Flags:  srv must
size, clt must size, has return, has ext, */
                                0x3,                /*
3 */
/* 104 */ 0xa,                /* 10 */
                                0x7,                /*
Ext Flags:  new corr desc, clt corr check, srv corr
check, */
/* 106 */ NdrFcShort( 0x20 ), /* 32 */
/* 108 */ NdrFcShort( 0x20 ), /* 32 */
/* 110 */ NdrFcShort( 0x0 ),  /* 0 */
/* 112 */ NdrFcShort( 0x0 ),  /* 0 */

          /* Parameter txn_in */

/* 114 */ NdrFcShort( 0x8b ), /* Flags:  must size,
must free, in, by val, */
#ifndef _ALPHA_
/* 116 */ NdrFcShort( 0x10 ), /* ia64 Stack
size/offset = 16 */
#else
                                NdrFcShort( 0x8 ),  /*
axp64 Stack size/offset = 8 */
#endif
/* 118 */ NdrFcShort( 0x3b6 ),          /* Type
Offset=950 */

          /* Parameter txn_out */

/* 120 */ NdrFcShort( 0x6113 ),         /* Flags:
must size, must free, out, simple ref, srv alloc
size=24 */
#ifndef _ALPHA_
/* 122 */ NdrFcShort( 0x28 ), /* ia64 Stack
size/offset = 40 */
#else
                                NdrFcShort( 0x20 ), /*
axp64 Stack size/offset = 32 */
#endif
/* 124 */ NdrFcShort( 0x3c8 ),          /* Type
Offset=968 */

          /* Return value */

/* 126 */ NdrFcShort( 0x70 ), /* Flags:  out, return,
base type, */
#ifndef _ALPHA_
```


©2005 Hewlett-Packard Company. All rights reserved.

```
/* 128 */ NdrFcShort( 0x30 ), /* ia64 Stack
size/offset = 48 */
#else
                                NdrFcShort( 0x28 ), /*
axp64 Stack size/offset = 40 */
#endif
/* 130 */ 0x8,                  /* FC_LONG */
                                0x0,                /*
0 */

          /* Procedure StockLevel */

/* 132 */ 0x33,                 /* FC_AUTO_HANDLE */
                                0x6c,               /*
Old Flags:  object, Oi2 */
/* 134 */ NdrFcLong( 0x0 ),     /* 0 */
/* 138 */ NdrFcShort( 0x6 ),    /* 6 */
#ifndef _ALPHA_
/* 140 */ NdrFcShort( 0x38 ), /* ia64 Stack
size/offset = 56 */
#else
                                NdrFcShort( 0x30 ), /*
axp64 Stack size/offset = 48 */
#endif
/* 142 */ NdrFcShort( 0x0 ),    /* 0 */
/* 144 */ NdrFcShort( 0x8 ),    /* 8 */
/* 146 */ 0x47,                 /* Oi2 Flags:  srv must
size, clt must size, has return, has ext, */
                                0x3,                /*
3 */
/* 148 */ 0xa,                  /* 10 */
                                0x7,                /*
Ext Flags:  new corr desc, clt corr check, srv corr
check, */
/* 150 */ NdrFcShort( 0x20 ), /* 32 */
/* 152 */ NdrFcShort( 0x20 ), /* 32 */
/* 154 */ NdrFcShort( 0x0 ),    /* 0 */
/* 156 */ NdrFcShort( 0x0 ),    /* 0 */

          /* Parameter txn_in */

/* 158 */ NdrFcShort( 0x8b ), /* Flags:  must size,
must free, in, by val, */
#ifndef _ALPHA_
/* 160 */ NdrFcShort( 0x10 ), /* ia64 Stack
size/offset = 16 */
#else
                                NdrFcShort( 0x8 ),  /*
axp64 Stack size/offset = 8 */
#endif
/* 162 */ NdrFcShort( 0x3b6 ),          /* Type
Offset=950 */

          /* Parameter txn_out */

/* 164 */ NdrFcShort( 0x6113 ),         /* Flags:
must size, must free, out, simple ref, srv alloc
size=24 */
#ifndef _ALPHA_
/* 166 */ NdrFcShort( 0x28 ), /* ia64 Stack
size/offset = 40 */
#else
                                NdrFcShort( 0x20 ), /*
axp64 Stack size/offset = 32 */
#endif
/* 168 */ NdrFcShort( 0x3c8 ),          /* Type
Offset=968 */

          /* Return value */

/* 170 */ NdrFcShort( 0x70 ), /* Flags:  out, return,
base type, */
#ifndef _ALPHA_
/* 172 */ NdrFcShort( 0x30 ), /* ia64 Stack
size/offset = 48 */
#else
                                NdrFcShort( 0x28 ), /*
axp64 Stack size/offset = 40 */
#endif
/* 174 */ 0x8,                  /* FC_LONG */
                                0x0,                /*
0 */

          /* Procedure OrderStatus */

/* 176 */ 0x33,                 /* FC_AUTO_HANDLE */
                                0x6c,               /*
Old Flags:  object, Oi2 */
/* 178 */ NdrFcLong( 0x0 ),     /* 0 */
/* 182 */ NdrFcShort( 0x7 ),    /* 7 */
#ifndef _ALPHA_
/* 184 */ NdrFcShort( 0x38 ), /* ia64 Stack
size/offset = 56 */
#else
                                NdrFcShort( 0x30 ), /*
axp64 Stack size/offset = 48 */
#endif
/* 186 */ NdrFcShort( 0x0 ),    /* 0 */
/* 188 */ NdrFcShort( 0x8 ),    /* 8 */
/* 190 */ 0x47,                 /* Oi2 Flags:  srv must
size, clt must size, has return, has ext, */
                                0x3,                /*
3 */
/* 192 */ 0xa,                  /* 10 */
                                0x7,                /*
Ext Flags:  new corr desc, clt corr check, srv corr
check, */
/* 194 */ NdrFcShort( 0x20 ), /* 32 */
/* 196 */ NdrFcShort( 0x20 ), /* 32 */
/* 198 */ NdrFcShort( 0x0 ),    /* 0 */
/* 200 */ NdrFcShort( 0x0 ),    /* 0 */

          /* Parameter txn_in */

/* 202 */ NdrFcShort( 0x8b ), /* Flags:  must size,
must free, in, by val, */
#ifndef _ALPHA_
/* 204 */ NdrFcShort( 0x10 ), /* ia64 Stack
size/offset = 16 */
#else
                                NdrFcShort( 0x8 ),  /*
axp64 Stack size/offset = 8 */
#endif
/* 206 */ NdrFcShort( 0x3b6 ),          /* Type
Offset=950 */

          /* Parameter txn_out */

/* 208 */ NdrFcShort( 0x6113 ),         /* Flags:
must size, must free, out, simple ref, srv alloc
size=24 */
#ifndef _ALPHA_
/* 210 */ NdrFcShort( 0x28 ), /* ia64 Stack
size/offset = 40 */
#else
                                NdrFcShort( 0x20 ), /*
axp64 Stack size/offset = 32 */
#endif
/* 212 */ NdrFcShort( 0x3c8 ),          /* Type
Offset=968 */

          /* Return value */

/* 214 */ NdrFcShort( 0x70 ), /* Flags:  out, return,
base type, */
#ifndef _ALPHA_
/* 216 */ NdrFcShort( 0x30 ), /* ia64 Stack
size/offset = 48 */
#else
                                NdrFcShort( 0x28 ), /*
axp64 Stack size/offset = 40 */
#endif
/* 218 */ 0x8,                  /* FC_LONG */
                                0x0,                /*
0 */

          /* Procedure CallSetComplete */

/* 220 */ 0x33,                 /* FC_AUTO_HANDLE */
                                0x6c,               /*
Old Flags:  object, Oi2 */
/* 222 */ NdrFcLong( 0x0 ),     /* 0 */
/* 226 */ NdrFcShort( 0x8 ),    /* 8 */
/* 228 */ NdrFcShort( 0x10 ), /* ia64, axp64 Stack
size/offset = 16 */
/* 230 */ NdrFcShort( 0x0 ),    /* 0 */
/* 232 */ NdrFcShort( 0x8 ),    /* 8 */
/* 234 */ 0x44,                 /* Oi2 Flags:  has
return, has ext, */
                                0x1,                /*
1 */
/* 236 */ 0xa,                  /* 10 */
                                0x1,                /*
Ext Flags:  new corr desc, */
/* 238 */ NdrFcShort( 0x0 ),    /* 0 */
/* 240 */ NdrFcShort( 0x0 ),    /* 0 */
/* 242 */ NdrFcShort( 0x0 ),    /* 0 */
/* 244 */ NdrFcShort( 0x0 ),    /* 0 */

          /* Return value */

/* 246 */ NdrFcShort( 0x70 ), /* Flags:  out, return,
base type, */
/* 248 */ NdrFcShort( 0x8 ),    /* ia64, axp64 Stack
size/offset = 8 */
/* 250 */ 0x8,                  /* FC_LONG */
                                0x0,                /*
0 */
```


©2005 Hewlett-Packard Company. All rights reserved.

```
                                0x0
        }
    };

static const MIDL_TYPE_FORMAT_STRING
__MIDL_TypeFormatString =
    {
        0,
        {
                                NdrFcShort( 0x0 ),  /*
0 */
/*  2 */
                                0x12, 0x0,          /*
FC_UP */
/*  4 */  NdrFcShort( 0x39e ),          /* Offset=
926 (930) */
/*  6 */
                                0x2b,               /*
FC_NON_ENCAPSULATED_UNION */
                                0x9,                /*
FC_ULONG */
/*  8 */  0x7,                /* Corr desc: FC_USHORT
*/
                                0x0,                /*
*/
/* 10 */  NdrFcShort( 0xfff8 ),         /* -8 */
/* 12 */  NdrFcShort( 0x1 ),  /* Corr flags:  early,
*/
/* 14 */  NdrFcShort( 0x2 ),  /* Offset= 2 (16) */
/* 16 */  NdrFcShort( 0x10 ), /* 16 */
/* 18 */  NdrFcShort( 0x2b ), /* 43 */
/* 20 */  NdrFcLong( 0x3 ),   /* 3 */
/* 24 */  NdrFcShort( 0x8008 ),         /* Simple arm
type: FC_LONG */
/* 26 */  NdrFcLong( 0x11 ),  /* 17 */
/* 30 */  NdrFcShort( 0x8001 ),         /* Simple arm
type: FC_BYTE */
/* 32 */  NdrFcLong( 0x2 ),   /* 2 */
/* 36 */  NdrFcShort( 0x8006 ),         /* Simple arm
type: FC_SHORT */
/* 38 */  NdrFcLong( 0x4 ),   /* 4 */
/* 42 */  NdrFcShort( 0x800a ),         /* Simple arm
type: FC_FLOAT */
/* 44 */  NdrFcLong( 0x5 ),   /* 5 */
/* 48 */  NdrFcShort( 0x800c ),         /* Simple arm
type: FC_DOUBLE */
/* 50 */  NdrFcLong( 0xb ),   /* 11 */
/* 54 */  NdrFcShort( 0x8006 ),         /* Simple arm
type: FC_SHORT */
/* 56 */  NdrFcLong( 0xa ),   /* 10 */
/* 60 */  NdrFcShort( 0x8008 ),         /* Simple arm
type: FC_LONG */
/* 62 */  NdrFcLong( 0x6 ),   /* 6 */
/* 66 */  NdrFcShort( 0xd6 ), /* Offset= 214 (280) */
/* 68 */  NdrFcLong( 0x7 ),   /* 7 */
/* 72 */  NdrFcShort( 0x800c ),         /* Simple arm
type: FC_DOUBLE */
/* 74 */  NdrFcLong( 0x8 ),   /* 8 */
/* 78 */  NdrFcShort( 0xd0 ), /* Offset= 208 (286) */
/* 80 */  NdrFcLong( 0xd ),   /* 13 */
/* 84 */  NdrFcShort( 0xe4 ), /* Offset= 228 (312) */
/* 86 */  NdrFcLong( 0x9 ),   /* 9 */
/* 90 */  NdrFcShort( 0xf0 ), /* Offset= 240 (330) */
/* 92 */  NdrFcLong( 0x2000 ),          /* 8192 */
/* 96 */  NdrFcShort( 0xfc ), /* Offset= 252 (348) */
/* 98 */  NdrFcLong( 0x24 ),  /* 36 */
/* 102 */ NdrFcShort( 0x2f4 ),          /* Offset=
756 (858) */
/* 104 */ NdrFcLong( 0x4024 ),          /* 16420 */
/* 108 */ NdrFcShort( 0x2ee ),          /* Offset=
750 (858) */
/* 110 */ NdrFcLong( 0x4011 ),          /* 16401 */
/* 114 */ NdrFcShort( 0x2ec ),          /* Offset=
748 (862) */
/* 116 */ NdrFcLong( 0x4002 ),          /* 16386 */
/* 120 */ NdrFcShort( 0x2ea ),          /* Offset=
746 (866) */
/* 122 */ NdrFcLong( 0x4003 ),          /* 16387 */
/* 126 */ NdrFcShort( 0x2e8 ),          /* Offset=
744 (870) */
/* 128 */ NdrFcLong( 0x4004 ),          /* 16388 */
/* 132 */ NdrFcShort( 0x2e6 ),          /* Offset=
742 (874) */
/* 134 */ NdrFcLong( 0x4005 ),          /* 16389 */
/* 138 */ NdrFcShort( 0x2e4 ),          /* Offset=
740 (878) */
/* 140 */ NdrFcLong( 0x400b ),          /* 16395 */
/* 144 */ NdrFcShort( 0x2d2 ),          /* Offset=
722 (866) */
/* 146 */ NdrFcLong( 0x400a ),          /* 16394 */
/* 150 */ NdrFcShort( 0x2d0 ),          /* Offset=
720 (870) */
/* 152 */ NdrFcLong( 0x4006 ),          /* 16390 */
/* 156 */ NdrFcShort( 0x2d6 ),          /* Offset=
726 (882) */
/* 158 */ NdrFcLong( 0x4007 ),          /* 16391 */
/* 162 */ NdrFcShort( 0x2cc ),          /* Offset=
716 (878) */
/* 164 */ NdrFcLong( 0x4008 ),          /* 16392 */
/* 168 */ NdrFcShort( 0x2ce ),          /* Offset=
718 (886) */
/* 170 */ NdrFcLong( 0x400d ),          /* 16397 */
/* 174 */ NdrFcShort( 0x2cc ),          /* Offset=
716 (890) */
/* 176 */ NdrFcLong( 0x4009 ),          /* 16393 */
/* 180 */ NdrFcShort( 0x2ca ),          /* Offset=
714 (894) */
/* 182 */ NdrFcLong( 0x6000 ),          /* 24576 */
/* 186 */ NdrFcShort( 0x2c8 ),          /* Offset=
712 (898) */
/* 188 */ NdrFcLong( 0x400c ),          /* 16396 */
/* 192 */ NdrFcShort( 0x2c6 ),          /* Offset=
710 (902) */
/* 194 */ NdrFcLong( 0x10 ),  /* 16 */
/* 198 */ NdrFcShort( 0x8002 ),         /* Simple arm
type: FC_CHAR */
/* 200 */ NdrFcLong( 0x12 ),  /* 18 */
/* 204 */ NdrFcShort( 0x8006 ),         /* Simple arm
type: FC_SHORT */
/* 206 */ NdrFcLong( 0x13 ),  /* 19 */
/* 210 */ NdrFcShort( 0x8008 ),         /* Simple arm
type: FC_LONG */
/* 212 */ NdrFcLong( 0x16 ),  /* 22 */
/* 216 */ NdrFcShort( 0x8008 ),         /* Simple arm
type: FC_LONG */
/* 218 */ NdrFcLong( 0x17 ),  /* 23 */
/* 222 */ NdrFcShort( 0x8008 ),         /* Simple arm
type: FC_LONG */
/* 224 */ NdrFcLong( 0xe ),   /* 14 */
/* 228 */ NdrFcShort( 0x2aa ),          /* Offset=
682 (910) */
/* 230 */ NdrFcLong( 0x400e ),          /* 16398 */
/* 234 */ NdrFcShort( 0x2b0 ),          /* Offset=
688 (922) */
/* 236 */ NdrFcLong( 0x4010 ),          /* 16400 */
/* 240 */ NdrFcShort( 0x2ae ),          /* Offset=
686 (926) */
/* 242 */ NdrFcLong( 0x4012 ),          /* 16402 */
/* 246 */ NdrFcShort( 0x26c ),          /* Offset=
620 (866) */
/* 248 */ NdrFcLong( 0x4013 ),          /* 16403 */
/* 252 */ NdrFcShort( 0x26a ),          /* Offset=
618 (870) */
/* 254 */ NdrFcLong( 0x4016 ),          /* 16406 */
/* 258 */ NdrFcShort( 0x264 ),          /* Offset=
612 (870) */
/* 260 */ NdrFcLong( 0x4017 ),          /* 16407 */
/* 264 */ NdrFcShort( 0x25e ),          /* Offset=
606 (870) */
/* 266 */ NdrFcLong( 0x0 ),   /* 0 */
/* 270 */ NdrFcShort( 0x0 ),  /* Offset= 0 (270) */
/* 272 */ NdrFcLong( 0x1 ),   /* 1 */
/* 276 */ NdrFcShort( 0x0 ),  /* Offset= 0 (276) */
/* 278 */ NdrFcShort( 0xffffffff ),     /* Offset= -1
(277) */
/* 280 */
                                0x15,               /*
FC_STRUCT */
                                0x7,                /*
7 */
/* 282 */ NdrFcShort( 0x8 ),  /* 8 */
/* 284 */ 0xb,                /* FC_HYPER */
                                0x5b,               /*
FC_END */
/* 286 */
                                0x12, 0x0,          /*
FC_UP */
/* 288 */ NdrFcShort( 0xe ),  /* Offset= 14 (302) */
/* 290 */
                                0x1b,               /*
FC_CARRAY */
                                0x1,                /*
1 */
/* 292 */ NdrFcShort( 0x2 ),  /* 2 */
/* 294 */ 0x9,                /* Corr desc: FC_ULONG
*/
                                0x0,                /*
*/
/* 296 */ NdrFcShort( 0xfffc ),         /* -4 */
/* 298 */ NdrFcShort( 0x1 ),  /* Corr flags:  early,
*/
/* 300 */ 0x6,                /* FC_SHORT */
                                0x5b,               /*
FC_END */
/* 302 */
                                0x17,               /*
FC_CSTRUCT */
```


©2005 Hewlett-Packard Company. All rights reserved.

```
                                0x3,                /*
3 */
/* 304 */ NdrFcShort( 0x8 ),  /* 8 */
/* 306 */ NdrFcShort( 0xfffffff0 ),     /* Offset= -
16 (290) */
/* 308 */ 0x8,                /* FC_LONG */
                                0x8,                /*
FC_LONG */
/* 310 */ 0x5c,               /* FC_PAD */
                                0x5b,               /*
FC_END */
/* 312 */
                                0x2f,               /*
FC_IP */
                                0x5a,               /*
FC_CONSTANT_IID */
/* 314 */ NdrFcLong( 0x0 ),   /* 0 */
/* 318 */ NdrFcShort( 0x0 ),  /* 0 */
/* 320 */ NdrFcShort( 0x0 ),  /* 0 */
/* 322 */ 0xc0,               /* 192 */
                                0x0,                /*
0 */
/* 324 */ 0x0,                /* 0 */
                                0x0,                /*
0 */
/* 326 */ 0x0,                /* 0 */
                                0x0,                /*
0 */
/* 328 */ 0x0,                /* 0 */
                                0x46,               /*
70 */
/* 330 */
                                0x2f,               /*
FC_IP */
                                0x5a,               /*
FC_CONSTANT_IID */
/* 332 */ NdrFcLong( 0x20400 ),         /* 132096 */
/* 336 */ NdrFcShort( 0x0 ),  /* 0 */
/* 338 */ NdrFcShort( 0x0 ),  /* 0 */
/* 340 */ 0xc0,               /* 192 */
                                0x0,                /*
0 */
/* 342 */ 0x0,                /* 0 */
                                0x0,                /*
0 */
/* 344 */ 0x0,                /* 0 */
                                0x0,                /*
0 */
/* 346 */ 0x0,                /* 0 */
                                0x46,               /*
70 */
/* 348 */
                                0x12, 0x10,         /*
FC_UP [pointer_deref] */
/* 350 */ NdrFcShort( 0x2 ),  /* Offset= 2 (352) */
/* 352 */
                                0x12, 0x0,          /*
FC_UP */
/* 354 */ NdrFcShort( 0x1e6 ),          /* Offset=
486 (840) */
/* 356 */
                                0x2a,               /*
FC_ENCAPSULATED_UNION */
                                0x89,               /*
137 */
/* 358 */ NdrFcShort( 0x20 ), /* 32 */
/* 360 */ NdrFcShort( 0xa ),  /* 10 */
/* 362 */ NdrFcLong( 0x8 ),   /* 8 */
/* 366 */ NdrFcShort( 0x50 ), /* Offset= 80 (446) */
/* 368 */ NdrFcLong( 0xd ),   /* 13 */
/* 372 */ NdrFcShort( 0x70 ), /* Offset= 112 (484) */
/* 374 */ NdrFcLong( 0x9 ),   /* 9 */
/* 378 */ NdrFcShort( 0x90 ), /* Offset= 144 (522) */
/* 380 */ NdrFcLong( 0xc ),   /* 12 */
/* 384 */ NdrFcShort( 0xb0 ), /* Offset= 176 (560) */
/* 386 */ NdrFcLong( 0x24 ),  /* 36 */
/* 390 */ NdrFcShort( 0x104 ),          /* Offset=
260 (650) */
/* 392 */ NdrFcLong( 0x800d ),          /* 32781 */
/* 396 */ NdrFcShort( 0x120 ),          /* Offset=
288 (684) */
/* 398 */ NdrFcLong( 0x10 ),  /* 16 */
/* 402 */ NdrFcShort( 0x13a ),          /* Offset=
314 (716) */
/* 404 */ NdrFcLong( 0x2 ),   /* 2 */
/* 408 */ NdrFcShort( 0x150 ),          /* Offset=
336 (744) */
/* 410 */ NdrFcLong( 0x3 ),   /* 3 */
/* 414 */ NdrFcShort( 0x166 ),          /* Offset=
358 (772) */
/* 416 */ NdrFcLong( 0x14 ),  /* 20 */
/* 420 */ NdrFcShort( 0x17c ),          /* Offset=
380 (800) */
/* 422 */ NdrFcShort( 0xffffffff ),     /* Offset= -1
(421) */
/* 424 */
                                0x21,               /*
FC_BOGUS_ARRAY */
                                0x3,                /*
3 */
/* 426 */ NdrFcShort( 0x0 ),  /* 0 */
/* 428 */ 0x19,               /* Corr desc:  field
pointer, FC_ULONG */
                                0x0,                /*
*/
/* 430 */ NdrFcShort( 0x0 ),  /* 0 */
/* 432 */ NdrFcShort( 0x1 ),  /* Corr flags:  early,
*/
/* 434 */ NdrFcLong( 0xffffffff ),      /* -1 */
/* 438 */ NdrFcShort( 0x0 ),  /* Corr flags:  */
/* 440 */
                                0x12, 0x0,          /*
FC_UP */
/* 442 */ NdrFcShort( 0xffffff74 ),     /* Offset= -
140 (302) */
/* 444 */ 0x5c,               /* FC_PAD */
                                0x5b,               /*
FC_END */
/* 446 */
                                0x1a,               /*
FC_BOGUS_STRUCT */
                                0x3,                /*
3 */
/* 448 */ NdrFcShort( 0x10 ), /* 16 */
/* 450 */ NdrFcShort( 0x0 ),  /* 0 */
/* 452 */ NdrFcShort( 0x6 ),  /* Offset= 6 (458) */
/* 454 */ 0x8,                /* FC_LONG */
                                0x39,               /*
FC_ALIGNM8 */
/* 456 */ 0x36,               /* FC_POINTER */
                                0x5b,               /*
FC_END */
/* 458 */
                                0x11, 0x0,          /*
FC_RP */
/* 460 */ NdrFcShort( 0xffffffdc ),     /* Offset= -
36 (424) */
/* 462 */
                                0x21,               /*
FC_BOGUS_ARRAY */
                                0x3,                /*
3 */
/* 464 */ NdrFcShort( 0x0 ),  /* 0 */
/* 466 */ 0x19,               /* Corr desc:  field
pointer, FC_ULONG */
                                0x0,                /*
*/
/* 468 */ NdrFcShort( 0x0 ),  /* 0 */
/* 470 */ NdrFcShort( 0x1 ),  /* Corr flags:  early,
*/
/* 472 */ NdrFcLong( 0xffffffff ),      /* -1 */
/* 476 */ NdrFcShort( 0x0 ),  /* Corr flags:  */
/* 478 */ 0x4c,               /* FC_EMBEDDED_COMPLEX
*/
                                0x0,                /*
0 */
/* 480 */ NdrFcShort( 0xffffff58 ),     /* Offset= -
168 (312) */
/* 482 */ 0x5c,               /* FC_PAD */
                                0x5b,               /*
FC_END */
/* 484 */
                                0x1a,               /*
FC_BOGUS_STRUCT */
                                0x3,                /*
3 */
/* 486 */ NdrFcShort( 0x10 ), /* 16 */
/* 488 */ NdrFcShort( 0x0 ),  /* 0 */
/* 490 */ NdrFcShort( 0x6 ),  /* Offset= 6 (496) */
/* 492 */ 0x8,                /* FC_LONG */
                                0x39,               /*
FC_ALIGNM8 */
/* 494 */ 0x36,               /* FC_POINTER */
                                0x5b,               /*
FC_END */
/* 496 */
                                0x11, 0x0,          /*
FC_RP */
/* 498 */ NdrFcShort( 0xffffffdc ),     /* Offset= -
36 (462) */
/* 500 */
                                0x21,               /*
FC_BOGUS_ARRAY */
                                0x3,                /*
3 */
/* 502 */ NdrFcShort( 0x0 ),  /* 0 */
/* 504 */ 0x19,               /* Corr desc:  field
pointer, FC_ULONG */
```


©2005 Hewlett-Packard Company. All rights reserved.

```
                                0x0,                /*
*/
/* 506 */ NdrFcShort( 0x0 ),  /* 0 */
/* 508 */ NdrFcShort( 0x1 ),  /* Corr flags:  early,
*/
/* 510 */ NdrFcLong( 0xffffffff ),      /* -1 */
/* 514 */ NdrFcShort( 0x0 ),  /* Corr flags:  */
/* 516 */ 0x4c,               /* FC_EMBEDDED_COMPLEX
*/
                                0x0,                /*
0 */
/* 518 */ NdrFcShort( 0xffffff44 ),     /* Offset= -
188 (330) */
/* 520 */ 0x5c,               /* FC_PAD */
                                0x5b,               /*
FC_END */
/* 522 */
                                0x1a,               /*
FC_BOGUS_STRUCT */
                                0x3,                /*
3 */
/* 524 */ NdrFcShort( 0x10 ), /* 16 */
/* 526 */ NdrFcShort( 0x0 ),  /* 0 */
/* 528 */ NdrFcShort( 0x6 ),  /* Offset= 6 (534) */
/* 530 */ 0x8,                /* FC_LONG */
                                0x39,               /*
FC_ALIGNM8 */
/* 532 */ 0x36,               /* FC_POINTER */
                                0x5b,               /*
FC_END */
/* 534 */
                                0x11, 0x0,          /*
FC_RP */
/* 536 */ NdrFcShort( 0xffffffdc ),     /* Offset= -
36 (500) */
/* 538 */
                                0x21,               /*
FC_BOGUS_ARRAY */
                                0x3,                /*
3 */
/* 540 */ NdrFcShort( 0x0 ),  /* 0 */
/* 542 */ 0x19,               /* Corr desc:  field
pointer, FC_ULONG */
                                0x0,                /*
*/
/* 544 */ NdrFcShort( 0x0 ),  /* 0 */
/* 546 */ NdrFcShort( 0x1 ),  /* Corr flags:  early,
*/
/* 548 */ NdrFcLong( 0xffffffff ),      /* -1 */
/* 552 */ NdrFcShort( 0x0 ),  /* Corr flags:  */
/* 554 */
                                0x12, 0x0,          /*
FC_UP */
/* 556 */ NdrFcShort( 0x176 ),          /* Offset=
374 (930) */
/* 558 */ 0x5c,               /* FC_PAD */
                                0x5b,               /*
FC_END */
/* 560 */
                                0x1a,               /*
FC_BOGUS_STRUCT */
                                0x3,                /*
3 */
/* 562 */ NdrFcShort( 0x10 ), /* 16 */
/* 564 */ NdrFcShort( 0x0 ),  /* 0 */
/* 566 */ NdrFcShort( 0x6 ),  /* Offset= 6 (572) */
/* 568 */ 0x8,                /* FC_LONG */
                                0x39,               /*
FC_ALIGNM8 */
/* 570 */ 0x36,               /* FC_POINTER */
                                0x5b,               /*
FC_END */
/* 572 */
                                0x11, 0x0,          /*
FC_RP */
/* 574 */ NdrFcShort( 0xffffffdc ),     /* Offset= -
36 (538) */
/* 576 */
                                0x2f,               /*
FC_IP */
                                0x5a,               /*
FC_CONSTANT_IID */
/* 578 */ NdrFcLong( 0x2f ),  /* 47 */
/* 582 */ NdrFcShort( 0x0 ),  /* 0 */
/* 584 */ NdrFcShort( 0x0 ),  /* 0 */
/* 586 */ 0xc0,               /* 192 */
                                0x0,                /*
0 */
/* 588 */ 0x0,                /* 0 */
                                0x0,                /*
0 */
/* 590 */ 0x0,                /* 0 */
                                0x0,                /*
0 */
/* 592 */ 0x0,                /* 0 */
                                0x46,               /*
70 */
/* 594 */
                                0x1b,               /*
FC_CARRAY */
                                0x0,                /*
0 */
/* 596 */ NdrFcShort( 0x1 ),  /* 1 */
/* 598 */ 0x19,               /* Corr desc:  field
pointer, FC_ULONG */
                                0x0,                /*
*/
/* 600 */ NdrFcShort( 0x4 ),  /* 4 */
/* 602 */ NdrFcShort( 0x1 ),  /* Corr flags:  early,
*/
/* 604 */ 0x1,                /* FC_BYTE */
                                0x5b,               /*
FC_END */
/* 606 */
                                0x1a,               /*
FC_BOGUS_STRUCT */
                                0x3,                /*
3 */
/* 608 */ NdrFcShort( 0x18 ), /* 24 */
/* 610 */ NdrFcShort( 0x0 ),  /* 0 */
/* 612 */ NdrFcShort( 0xc ),  /* Offset= 12 (624) */
/* 614 */ 0x8,                /* FC_LONG */
                                0x8,                /*
FC_LONG */
/* 616 */ 0x4c,               /* FC_EMBEDDED_COMPLEX
*/
                                0x0,                /*
0 */
/* 618 */ NdrFcShort( 0xffffffd6 ),     /* Offset= -
42 (576) */
/* 620 */ 0x39,               /* FC_ALIGNM8 */
                                0x36,               /*
FC_POINTER */
/* 622 */ 0x5c,               /* FC_PAD */
                                0x5b,               /*
FC_END */
/* 624 */
                                0x12, 0x0,          /*
FC_UP */
/* 626 */ NdrFcShort( 0xffffffe0 ),     /* Offset= -
32 (594) */
/* 628 */
                                0x21,               /*
FC_BOGUS_ARRAY */
                                0x3,                /*
3 */
/* 630 */ NdrFcShort( 0x0 ),  /* 0 */
/* 632 */ 0x19,               /* Corr desc:  field
pointer, FC_ULONG */
                                0x0,                /*
*/
/* 634 */ NdrFcShort( 0x0 ),  /* 0 */
/* 636 */ NdrFcShort( 0x1 ),  /* Corr flags:  early,
*/
/* 638 */ NdrFcLong( 0xffffffff ),      /* -1 */
/* 642 */ NdrFcShort( 0x0 ),  /* Corr flags:  */
/* 644 */
                                0x12, 0x0,          /*
FC_UP */
/* 646 */ NdrFcShort( 0xffffffd8 ),     /* Offset= -
40 (606) */
/* 648 */ 0x5c,               /* FC_PAD */
                                0x5b,               /*
FC_END */
/* 650 */
                                0x1a,               /*
FC_BOGUS_STRUCT */
                                0x3,                /*
3 */
/* 652 */ NdrFcShort( 0x10 ), /* 16 */
/* 654 */ NdrFcShort( 0x0 ),  /* 0 */
/* 656 */ NdrFcShort( 0x6 ),  /* Offset= 6 (662) */
/* 658 */ 0x8,                /* FC_LONG */
                                0x39,               /*
FC_ALIGNM8 */
/* 660 */ 0x36,               /* FC_POINTER */
                                0x5b,               /*
FC_END */
/* 662 */
                                0x11, 0x0,          /*
FC_RP */
/* 664 */ NdrFcShort( 0xffffffdc ),     /* Offset= -
36 (628) */
/* 666 */
                                0x1d,               /*
FC_SMFARRAY */
                                0x0,                /*
0 */
/* 668 */ NdrFcShort( 0x8 ),  /* 8 */
```


©2005 Hewlett-Packard Company. All rights reserved.

```
/* 670 */ 0x1,                /* FC_BYTE */
                              0x5b,               /*
FC_END */
/* 672 */
                              0x15,               /*
FC_STRUCT */
                              0x3,                /*
3 */
/* 674 */ NdrFcShort( 0x10 ), /* 16 */
/* 676 */ 0x8,                /* FC_LONG */
                              0x6,                /*
FC_SHORT */
/* 678 */ 0x6,                /* FC_SHORT */
                              0x4c,               /*
FC_EMBEDDED_COMPLEX */
/* 680 */ 0x0,                /* 0 */
                              NdrFcShort( 0xfffffff1
),        /* Offset= -15 (666) */
                              0x5b,               /*
FC_END */
/* 684 */
                              0x1a,               /*
FC_BOGUS_STRUCT */
                              0x3,                /*
3 */
/* 686 */ NdrFcShort( 0x20 ), /* 32 */
/* 688 */ NdrFcShort( 0x0 ),  /* 0 */
/* 690 */ NdrFcShort( 0xa ),  /* Offset= 10 (700) */
/* 692 */ 0x8,                /* FC_LONG */
                              0x39,               /*
FC_ALIGNM8 */
/* 694 */ 0x36,               /* FC_POINTER */
                              0x4c,               /*
FC_EMBEDDED_COMPLEX */
/* 696 */ 0x0,                /* 0 */
                              NdrFcShort( 0xffffffe7
),        /* Offset= -25 (672) */
                              0x5b,               /*
FC_END */
/* 700 */
                              0x11, 0x0,          /*
FC_RP */
/* 702 */ NdrFcShort( 0xffffff10 ),     /* Offset= -
240 (462) */
/* 704 */
                              0x1b,               /*
FC_CARRAY */
                              0x0,                /*
0 */
/* 706 */ NdrFcShort( 0x1 ),  /* 1 */
/* 708 */ 0x19,               /* Corr desc:  field
pointer, FC_ULONG */
                              0x0,                /*
*/
/* 710 */ NdrFcShort( 0x0 ),  /* 0 */
/* 712 */ NdrFcShort( 0x1 ),  /* Corr flags:  early,
*/
/* 714 */ 0x1,                /* FC_BYTE */
                              0x5b,               /*
FC_END */
/* 716 */
                              0x1a,               /*
FC_BOGUS_STRUCT */
                              0x3,                /*
3 */
/* 718 */ NdrFcShort( 0x10 ), /* 16 */
/* 720 */ NdrFcShort( 0x0 ),  /* 0 */
/* 722 */ NdrFcShort( 0x6 ),  /* Offset= 6 (728) */
/* 724 */ 0x8,                /* FC_LONG */
                              0x39,               /*
FC_ALIGNM8 */
/* 726 */ 0x36,               /* FC_POINTER */
                              0x5b,               /*
FC_END */
/* 728 */
                              0x12, 0x0,          /*
FC_UP */
/* 730 */ NdrFcShort( 0xffffffe6 ),     /* Offset= -
26 (704) */
/* 732 */
                              0x1b,               /*
FC_CARRAY */
                              0x1,                /*
1 */
/* 734 */ NdrFcShort( 0x2 ),  /* 2 */
/* 736 */ 0x19,               /* Corr desc:  field
pointer, FC_ULONG */
                              0x0,                /*
*/
/* 738 */ NdrFcShort( 0x0 ),  /* 0 */
/* 740 */ NdrFcShort( 0x1 ),  /* Corr flags:  early,
*/
/* 742 */ 0x6,                /* FC_SHORT */
                              0x5b,               /*
FC_END */
/* 744 */
                              0x1a,               /*
FC_BOGUS_STRUCT */
                              0x3,                /*
3 */
/* 746 */ NdrFcShort( 0x10 ), /* 16 */
/* 748 */ NdrFcShort( 0x0 ),  /* 0 */
/* 750 */ NdrFcShort( 0x6 ),  /* Offset= 6 (756) */
/* 752 */ 0x8,                /* FC_LONG */
                              0x39,               /*
FC_ALIGNM8 */
/* 754 */ 0x36,               /* FC_POINTER */
                              0x5b,               /*
FC_END */
/* 756 */
                              0x12, 0x0,          /*
FC_UP */
/* 758 */ NdrFcShort( 0xffffffe6 ),     /* Offset= -
26 (732) */
/* 760 */
                              0x1b,               /*
FC_CARRAY */
                              0x3,                /*
3 */
/* 762 */ NdrFcShort( 0x4 ),  /* 4 */
/* 764 */ 0x19,               /* Corr desc:  field
pointer, FC_ULONG */
                              0x0,                /*
*/
/* 766 */ NdrFcShort( 0x0 ),  /* 0 */
/* 768 */ NdrFcShort( 0x1 ),  /* Corr flags:  early,
*/
/* 770 */ 0x8,                /* FC_LONG */
                              0x5b,               /*
FC_END */
/* 772 */
                              0x1a,               /*
FC_BOGUS_STRUCT */
                              0x3,                /*
3 */
/* 774 */ NdrFcShort( 0x10 ), /* 16 */
/* 776 */ NdrFcShort( 0x0 ),  /* 0 */
/* 778 */ NdrFcShort( 0x6 ),  /* Offset= 6 (784) */
/* 780 */ 0x8,                /* FC_LONG */
                              0x39,               /*
FC_ALIGNM8 */
/* 782 */ 0x36,               /* FC_POINTER */
                              0x5b,               /*
FC_END */
/* 784 */
                              0x12, 0x0,          /*
FC_UP */
/* 786 */ NdrFcShort( 0xffffffe6 ),     /* Offset= -
26 (760) */
/* 788 */
                              0x1b,               /*
FC_CARRAY */
                              0x7,                /*
7 */
/* 790 */ NdrFcShort( 0x8 ),  /* 8 */
/* 792 */ 0x19,               /* Corr desc:  field
pointer, FC_ULONG */
                              0x0,                /*
*/
/* 794 */ NdrFcShort( 0x0 ),  /* 0 */
/* 796 */ NdrFcShort( 0x1 ),  /* Corr flags:  early,
*/
/* 798 */ 0xb,                /* FC_HYPER */
                              0x5b,               /*
FC_END */
/* 800 */
                              0x1a,               /*
FC_BOGUS_STRUCT */
                              0x3,                /*
3 */
/* 802 */ NdrFcShort( 0x10 ), /* 16 */
/* 804 */ NdrFcShort( 0x0 ),  /* 0 */
/* 806 */ NdrFcShort( 0x6 ),  /* Offset= 6 (812) */
/* 808 */ 0x8,                /* FC_LONG */
                              0x39,               /*
FC_ALIGNM8 */
/* 810 */ 0x36,               /* FC_POINTER */
                              0x5b,               /*
FC_END */
/* 812 */
                              0x12, 0x0,          /*
FC_UP */
/* 814 */ NdrFcShort( 0xffffffe6 ),     /* Offset= -
26 (788) */
/* 816 */
                              0x15,               /*
FC_STRUCT */
```


©2005 Hewlett-Packard Company. All rights reserved.

```
                                0x3,                /*
3 */
/* 818 */ NdrFcShort( 0x8 ),  /* 8 */
/* 820 */ 0x8,                /* FC_LONG */
                                0x8,                /*
FC_LONG */
/* 822 */ 0x5c,               /* FC_PAD */
                                0x5b,               /*
FC_END */
/* 824 */
                                0x1b,               /*
FC_CARRAY */
                                0x3,                /*
3 */
/* 826 */ NdrFcShort( 0x8 ),  /* 8 */
/* 828 */ 0x7,                /* Corr desc: FC_USHORT
*/
                                0x0,                /*
*/
/* 830 */ NdrFcShort( 0xffc8 ),         /* -56 */
/* 832 */ NdrFcShort( 0x1 ),  /* Corr flags:  early,
*/
/* 834 */ 0x4c,               /* FC_EMBEDDED_COMPLEX
*/
                                0x0,                /*
0 */
/* 836 */ NdrFcShort( 0xffffffec ),     /* Offset= -
20 (816) */
/* 838 */ 0x5c,               /* FC_PAD */
                                0x5b,               /*
FC_END */
/* 840 */
                                0x1a,               /*
FC_BOGUS_STRUCT */
                                0x3,                /*
3 */
/* 842 */ NdrFcShort( 0x38 ), /* 56 */
/* 844 */ NdrFcShort( 0xffffffec ),     /* Offset= -
20 (824) */
/* 846 */ NdrFcShort( 0x0 ),  /* Offset= 0 (846) */
/* 848 */ 0x6,                /* FC_SHORT */
                                0x6,                /*
FC_SHORT */
/* 850 */ 0x38,               /* FC_ALIGNM4 */
                                0x8,                /*
FC_LONG */
/* 852 */ 0x8,                /* FC_LONG */
                                0x4c,               /*
FC_EMBEDDED_COMPLEX */
/* 854 */ 0x4,                /* 4 */
                                NdrFcShort( 0xfffffe0d
),        /* Offset= -499 (356) */
                                0x5b,               /*
FC_END */
/* 858 */
                                0x12, 0x0,          /*
FC_UP */
/* 860 */ NdrFcShort( 0xffffff02 ),     /* Offset= -
254 (606) */
/* 862 */
                                0x12, 0x8,          /*
FC_UP [simple_pointer] */
/* 864 */ 0x1,                /* FC_BYTE */
                                0x5c,               /*
FC_PAD */
/* 866 */
                                0x12, 0x8,          /*
FC_UP [simple_pointer] */
/* 868 */ 0x6,                /* FC_SHORT */
                                0x5c,               /*
FC_PAD */
/* 870 */
                                0x12, 0x8,          /*
FC_UP [simple_pointer] */
/* 872 */ 0x8,                /* FC_LONG */
                                0x5c,               /*
FC_PAD */
/* 874 */
                                0x12, 0x8,          /*
FC_UP [simple_pointer] */
/* 876 */ 0xa,                /* FC_FLOAT */
                                0x5c,               /*
FC_PAD */
/* 878 */
                                0x12, 0x8,          /*
FC_UP [simple_pointer] */
/* 880 */ 0xc,                /* FC_DOUBLE */
                                0x5c,               /*
FC_PAD */
/* 882 */
                                0x12, 0x0,          /*
FC_UP */
/* 884 */ NdrFcShort( 0xfffffda4 ),     /* Offset= -
604 (280) */
/* 886 */
                                0x12, 0x10,         /*
FC_UP [pointer_deref] */
/* 888 */ NdrFcShort( 0xfffffda6 ),     /* Offset= -
602 (286) */
/* 890 */
                                0x12, 0x10,         /*
FC_UP [pointer_deref] */
/* 892 */ NdrFcShort( 0xfffffdbc ),     /* Offset= -
580 (312) */
/* 894 */
                                0x12, 0x10,         /*
FC_UP [pointer_deref] */
/* 896 */ NdrFcShort( 0xfffffdca ),     /* Offset= -
566 (330) */
/* 898 */
                                0x12, 0x10,         /*
FC_UP [pointer_deref] */
/* 900 */ NdrFcShort( 0xfffffdd8 ),     /* Offset= -
552 (348) */
/* 902 */
                                0x12, 0x10,         /*
FC_UP [pointer_deref] */
/* 904 */ NdrFcShort( 0x2 ),  /* Offset= 2 (906) */
/* 906 */
                                0x12, 0x0,          /*
FC_UP */
/* 908 */ NdrFcShort( 0x16 ), /* Offset= 22 (930) */
/* 910 */
                                0x15,               /*
FC_STRUCT */
                                0x7,                /*
7 */
/* 912 */ NdrFcShort( 0x10 ), /* 16 */
/* 914 */ 0x6,                /* FC_SHORT */
                                0x1,                /*
FC_BYTE */
/* 916 */ 0x1,                /* FC_BYTE */
                                0x38,               /*
FC_ALIGNM4 */
/* 918 */ 0x8,                /* FC_LONG */
                                0x39,               /*
FC_ALIGNM8 */
/* 920 */ 0xb,                /* FC_HYPER */
                                0x5b,               /*
FC_END */
/* 922 */
                                0x12, 0x0,          /*
FC_UP */
/* 924 */ NdrFcShort( 0xfffffff2 ),     /* Offset= -
14 (910) */
/* 926 */
                                0x12, 0x8,          /*
FC_UP [simple_pointer] */
/* 928 */ 0x2,                /* FC_CHAR */
                                0x5c,               /*
FC_PAD */
/* 930 */
                                0x1a,               /*
FC_BOGUS_STRUCT */
                                0x7,                /*
7 */
/* 932 */ NdrFcShort( 0x20 ), /* 32 */
/* 934 */ NdrFcShort( 0x0 ),  /* 0 */
/* 936 */ NdrFcShort( 0x0 ),  /* Offset= 0 (936) */
/* 938 */ 0x8,                /* FC_LONG */
                                0x8,                /*
FC_LONG */
/* 940 */ 0x6,                /* FC_SHORT */
                                0x6,                /*
FC_SHORT */
/* 942 */ 0x6,                /* FC_SHORT */
                                0x6,                /*
FC_SHORT */
/* 944 */ 0x4c,               /* FC_EMBEDDED_COMPLEX
*/
                                0x0,                /*
0 */
/* 946 */ NdrFcShort( 0xfffffc54 ),     /* Offset= -
940 (6) */
/* 948 */ 0x5c,               /* FC_PAD */
                                0x5b,               /*
FC_END */
/* 950 */ 0xb4,               /* FC_USER_MARSHAL */
                                0x83,               /*
131 */
/* 952 */ NdrFcShort( 0x0 ),  /* 0 */
/* 954 */ NdrFcShort( 0x18 ), /* 24 */
/* 956 */ NdrFcShort( 0x0 ),  /* 0 */
/* 958 */ NdrFcShort( 0xfffffc44 ),     /* Offset= -
956 (2) */
/* 960 */
                                0x11, 0x4,          /*
FC_RP [alloced_on_stack] */
```


©2005 Hewlett-Packard Company. All rights reserved.

```
/* 962 */ NdrFcShort( 0x6 ),  /* Offset= 6 (968) */
/* 964 */
                               0x13, 0x0,          /*
FC_OP */
/* 966 */ NdrFcShort( 0xffffffdc ),     /* Offset= -
36 (930) */
/* 968 */ 0xb4,                /* FC_USER_MARSHAL */
                               0x83,               /*
131 */
/* 970 */ NdrFcShort( 0x0 ),  /* 0 */
/* 972 */ NdrFcShort( 0x18 ), /* 24 */
/* 974 */ NdrFcShort( 0x0 ),  /* 0 */
/* 976 */ NdrFcShort( 0xfffffff4 ),     /* Offset= -
12 (964) */

                               0x0
        }
    };

const CInterfaceProxyVtbl *
_tpcc_com_ps_ProxyVtblList[] =
{
    ( CInterfaceProxyVtbl *) &_ITPCCProxyVtbl,
    0
};

const CInterfaceStubVtbl *
_tpcc_com_ps_StubVtblList[] =
{
    ( CInterfaceStubVtbl *) &_ITPCCStubVtbl,
    0
};

PCInterfaceName const
_tpcc_com_ps_InterfaceNamesList[] =
{
    "ITPCC",
    0
};


#define _tpcc_com_ps_CHECK_IID(n)
          IID_GENERIC_CHECK_IID( _tpcc_com_ps, pIID,
n)

int __stdcall _tpcc_com_ps_IID_Lookup( const IID *
pIID, int * pIndex )
{

    if(!_tpcc_com_ps_CHECK_IID(0))
        {
        *pIndex = 0;
        return 1;
        }

    return 0;
}

const ExtendedProxyFileInfo tpcc_com_ps_ProxyFileInfo
=
{
    (PCInterfaceProxyVtblList *) &
_tpcc_com_ps_ProxyVtblList,
    (PCInterfaceStubVtblList *) &
_tpcc_com_ps_StubVtblList,
    (const PCInterfaceName * ) &
_tpcc_com_ps_InterfaceNamesList,
    0, // no delegation
    & _tpcc_com_ps_IID_Lookup,
    1,
    2,
    0, /* table of [async_uuid] interfaces */
    0, /* Filler1 */
    0, /* Filler2 */
    0  /* Filler3 */
};


#endif /* defined(_M_IA64) || defined(_M_AXP64)*/
```

tpcc_com_ps_p.c

```
#pragma warning( disable: 4049 )  /* more than 64k
source lines */

/* this ALWAYS GENERATED file contains the proxy stub
code */


 /* File created by MIDL compiler version 5.03.0280
*/
/* at Thu Dec 13 23:13:08 2001
 */
/* Compiler settings for .\src\tpcc_com_ps.idl:
    Oicf (OptLev=i2), W1, Zp8, env=Win32 (32b run),
ms_ext, c_ext
    error checks: allocation ref bounds_check enum
stub_data
    VC __declspec() decoration level:
         __declspec(uuid()), __declspec(selectany),
__declspec(novtable)
         DECLSPEC_UUID(), MIDL_INTERFACE()
*/
//@@MIDL_FILE_HEADING(  )

#if !defined(_M_IA64) && !defined(_M_AXP64)
#define USE_STUBLESS_PROXY


/* verify that the <rpcproxy.h> version is high
enough to compile this file*/
#ifndef __REDQ_RPCPROXY_H_VERSION__
#define __REQUIRED_RPCPROXY_H_VERSION__ 440
#endif


#include "rpcproxy.h"
#ifndef __RPCPROXY_H_VERSION__
#error this stub requires an updated version of
<rpcproxy.h>
#endif // __RPCPROXY_H_VERSION__


#include "tpcc_com_ps.h"

#define TYPE_FORMAT_STRING_SIZE   997
#define PROC_FORMAT_STRING_SIZE   193
#define TRANSMIT_AS_TABLE_SIZE    0
#define WIRE_MARSHAL_TABLE_SIZE   1

typedef struct _MIDL_TYPE_FORMAT_STRING
    {
    short          Pad;
    unsigned char  Format[ TYPE_FORMAT_STRING_SIZE ];
    } MIDL_TYPE_FORMAT_STRING;

typedef struct _MIDL_PROC_FORMAT_STRING
    {
    short          Pad;
    unsigned char  Format[ PROC_FORMAT_STRING_SIZE ];
    } MIDL_PROC_FORMAT_STRING;


extern const MIDL_TYPE_FORMAT_STRING
__MIDL_TypeFormatString;
extern const MIDL_PROC_FORMAT_STRING
__MIDL_ProcFormatString;


/* Standard interface: __MIDL_itf_tpcc_com_ps_0000,
ver. 0.0,

GUID={0x00000000,0x0000,0x0000,{0x00,0x00,0x00,0x00,0
x00,0x00,0x00,0x00}} */


/* Object interface: IUnknown, ver. 0.0,

GUID={0x00000000,0x0000,0x0000,{0xC0,0x00,0x00,0x00,0
x00,0x00,0x00,0x46}} */


/* Object interface: ITPCC, ver. 0.0,

GUID={0xFEEE6AA2,0x84B1,0x11d2,{0xBA,0x47,0x00,0xC0,0
x4F,0xBF,0xE0,0x8B}} */


extern const MIDL_STUB_DESC Object_StubDesc;


extern const MIDL_SERVER_INFO ITPCC_ServerInfo;

#pragma code_seg(".orpc")
static const unsigned short
ITPCC_FormatStringOffsetTable[] =
    {
    0,
    34,
    68,
    102,
    136,
    170
    };
```


©2005 Hewlett-Packard Company. All rights reserved.

```
static const MIDL_SERVER_INFO ITPCC_ServerInfo =
    {
    &Object_StubDesc,
    0,
    __MIDL_ProcFormatString.Format,
    &ITPCC_FormatStringOffsetTable[-3],
    0,
    0,
    0,
    0
    };

static const MIDL_STUBLESS_PROXY_INFO ITPCC_ProxyInfo
=
    {
    &Object_StubDesc,
    __MIDL_ProcFormatString.Format,
    &ITPCC_FormatStringOffsetTable[-3],
    0,
    0,
    0
    };

CINTERFACE_PROXY_VTABLE(9) _ITPCCProxyVtbl =
{
    &ITPCC_ProxyInfo,
    &IID_ITPCC,
    IUnknown_QueryInterface_Proxy,
    IUnknown_AddRef_Proxy,
    IUnknown_Release_Proxy ,
    (void *)-1 /* ITPCC::NewOrder */ ,
    (void *)-1 /* ITPCC::Payment */ ,
    (void *)-1 /* ITPCC::Delivery */ ,
    (void *)-1 /* ITPCC::StockLevel */ ,
    (void *)-1 /* ITPCC::OrderStatus */ ,
    (void *)-1 /* ITPCC::CallSetComplete */
};

const CInterfaceStubVtbl _ITPCCStubVtbl =
{
    &IID_ITPCC,
    &ITPCC_ServerInfo,
    9,
    0, /* pure interpreted */
    CStdStubBuffer_METHODS
};

extern const USER_MARSHAL_ROUTINE_QUADRUPLE
UserMarshalRoutines[ WIRE_MARSHAL_TABLE_SIZE ];

static const MIDL_STUB_DESC Object_StubDesc =
    {
    0,
    NdrOleAllocate,
    NdrOleFree,
    0,
    0,
    0,
    0,
    0,
    __MIDL_TypeFormatString.Format,
    1, /* -error bounds_check flag */
    0x20000, /* Ndr library version */
    0,
    0x5030118, /* MIDL Version 5.3.280 */
    0,
    UserMarshalRoutines,
    0,  /* notify & notify_flag routine table */
    0x1, /* MIDL flag */
    0,  /* Reserved3 */
    0,  /* Reserved4 */
    0   /* Reserved5 */
    };

#pragma data_seg(".rdata")

static const USER_MARSHAL_ROUTINE_QUADRUPLE
UserMarshalRoutines[ WIRE_MARSHAL_TABLE_SIZE ] =
        {

            {
            VARIANT_UserSize
            ,VARIANT_UserMarshal
            ,VARIANT_UserUnmarshal
            ,VARIANT_UserFree
            }

        };


#if !defined(__RPC_WIN32__)
#error  Invalid build platform for this stub.
#endif

#if !(TARGET_IS_NT40_OR_LATER)
#error You need a Windows NT 4.0 or later to run this
stub because it uses these features:
#error   -Oif or -Oicf, [wire_marshal] or
[user_marshal] attribute.
#error However, your C/C++ compilation flags indicate
you intend to run this app on earlier systems.
#error This app will die there with the
RPC_X_WRONG_STUB_VERSION error.
#endif


static const MIDL_PROC_FORMAT_STRING
__MIDL_ProcFormatString =
    {
        0,
        {

          /* Procedure NewOrder */

                                0x33,               /*
FC_AUTO_HANDLE */
                                0x6c,               /*
Old Flags:  object, Oi2 */
/*  2 */  NdrFcLong( 0x0 ),   /* 0 */
/*  6 */  NdrFcShort( 0x3 ),  /* 3 */
#ifndef _ALPHA_
#ifndef _PPC_
#if !defined(_MIPS_)
/*  8 */  NdrFcShort( 0x1c ), /* x86 Stack
size/offset = 28 */
#else
                                NdrFcShort( 0x20 ), /*
MIPS Stack size/offset = 32 */
#endif
#else
                                NdrFcShort( 0x20 ), /*
PPC Stack size/offset = 32 */
#endif
#else
                                NdrFcShort( 0x28 ), /*
Alpha Stack size/offset = 40 */
#endif
/* 10 */  NdrFcShort( 0x0 ),  /* 0 */
/* 12 */  NdrFcShort( 0x8 ),  /* 8 */
/* 14 */  0x7,                /* Oi2 Flags:  srv must
size, clt must size, has return, */
                                0x3,                /*
3 */

          /* Parameter txn_in */

/* 16 */  NdrFcShort( 0x8b ), /* Flags:  must size,
must free, in, by val, */
#ifndef _ALPHA_
#ifndef _PPC_
#if !defined(_MIPS_)
/* 18 */  NdrFcShort( 0x4 ),  /* x86 Stack
size/offset = 4 */
#else
                                NdrFcShort( 0x8 ),  /*
MIPS Stack size/offset = 8 */
#endif
#else
                                NdrFcShort( 0x8 ),  /*
PPC Stack size/offset = 8 */
#endif
#else
                                NdrFcShort( 0x8 ),  /*
Alpha Stack size/offset = 8 */
#endif
/* 20 */  NdrFcShort( 0x3c8 ),          /* Type
Offset=968 */

          /* Parameter txn_out */

/* 22 */  NdrFcShort( 0x4113 ),         /* Flags:
must size, must free, out, simple ref, srv alloc
size=16 */
#ifndef _ALPHA_
#ifndef _PPC_
#if !defined(_MIPS_)
/* 24 */  NdrFcShort( 0x14 ), /* x86 Stack
size/offset = 20 */
#else
                                NdrFcShort( 0x18 ), /*
MIPS Stack size/offset = 24 */
#endif
#else
                                NdrFcShort( 0x18 ), /*
PPC Stack size/offset = 24 */
#endif
#else
```


©2005 Hewlett-Packard Company. All rights reserved.

```
                                NdrFcShort( 0x18 ), /*
Alpha Stack size/offset = 24 */
#endif
/* 26 */  NdrFcShort( 0x3da ),          /* Type
Offset=986 */

          /* Return value */

/* 28 */  NdrFcShort( 0x70 ), /* Flags:  out, return,
base type, */
#ifndef _ALPHA_
#ifndef _PPC_
#if !defined(_MIPS_)
/* 30 */  NdrFcShort( 0x18 ), /* x86 Stack
size/offset = 24 */
#else
                                NdrFcShort( 0x1c ), /*
MIPS Stack size/offset = 28 */
#endif
#else
                                NdrFcShort( 0x1c ), /*
PPC Stack size/offset = 28 */
#endif
#else
                                NdrFcShort( 0x20 ), /*
Alpha Stack size/offset = 32 */
#endif
/* 32 */  0x8,                  /* FC_LONG */
                                0x0,                /*
0 */

          /* Procedure Payment */

/* 34 */  0x33,                 /* FC_AUTO_HANDLE */
                                0x6c,               /*
Old Flags:  object, Oi2 */
/* 36 */  NdrFcLong( 0x0 ),   /* 0 */
/* 40 */  NdrFcShort( 0x4 ),  /* 4 */
#ifndef _ALPHA_
#ifndef _PPC_
#if !defined(_MIPS_)
/* 42 */  NdrFcShort( 0x1c ), /* x86 Stack
size/offset = 28 */
#else
                                NdrFcShort( 0x20 ), /*
MIPS Stack size/offset = 32 */
#endif
#else
                                NdrFcShort( 0x20 ), /*
PPC Stack size/offset = 32 */
#endif
#else
                                NdrFcShort( 0x28 ), /*
Alpha Stack size/offset = 40 */
#endif
/* 44 */  NdrFcShort( 0x0 ),  /* 0 */
/* 46 */  NdrFcShort( 0x8 ),  /* 8 */
/* 48 */  0x7,                  /* Oi2 Flags:  srv must
size, clt must size, has return, */
                                0x3,                /*
3 */

          /* Parameter txn_in */

/* 50 */  NdrFcShort( 0x8b ), /* Flags:  must size,
must free, in, by val, */
#ifndef _ALPHA_
#ifndef _PPC_
#if !defined(_MIPS_)
/* 52 */  NdrFcShort( 0x4 ),  /* x86 Stack
size/offset = 4 */
#else
                                NdrFcShort( 0x8 ),  /*
MIPS Stack size/offset = 8 */
#endif
#else
                                NdrFcShort( 0x8 ),  /*
PPC Stack size/offset = 8 */
#endif
#else
                                NdrFcShort( 0x8 ),  /*
Alpha Stack size/offset = 8 */
#endif
/* 54 */  NdrFcShort( 0x3c8 ),          /* Type
Offset=968 */

          /* Parameter txn_out */

/* 56 */  NdrFcShort( 0x4113 ),         /* Flags:
must size, must free, out, simple ref, srv alloc
size=16 */
#ifndef _ALPHA_
#ifndef _PPC_
#if !defined(_MIPS_)
/* 58 */  NdrFcShort( 0x14 ), /* x86 Stack
size/offset = 20 */
#else
                                NdrFcShort( 0x18 ), /*
MIPS Stack size/offset = 24 */
#endif
#else
                                NdrFcShort( 0x18 ), /*
PPC Stack size/offset = 24 */
#endif
#else
                                NdrFcShort( 0x18 ), /*
Alpha Stack size/offset = 24 */
#endif
/* 60 */  NdrFcShort( 0x3da ),          /* Type
Offset=986 */

          /* Return value */

/* 62 */  NdrFcShort( 0x70 ), /* Flags:  out, return,
base type, */
#ifndef _ALPHA_
#ifndef _PPC_
#if !defined(_MIPS_)
/* 64 */  NdrFcShort( 0x18 ), /* x86 Stack
size/offset = 24 */
#else
                                NdrFcShort( 0x1c ), /*
MIPS Stack size/offset = 28 */
#endif
#else
                                NdrFcShort( 0x1c ), /*
PPC Stack size/offset = 28 */
#endif
#else
                                NdrFcShort( 0x20 ), /*
Alpha Stack size/offset = 32 */
#endif
/* 66 */  0x8,                  /* FC_LONG */
                                0x0,                /*
0 */

          /* Procedure Delivery */

/* 68 */  0x33,                 /* FC_AUTO_HANDLE */
                                0x6c,               /*
Old Flags:  object, Oi2 */
/* 70 */  NdrFcLong( 0x0 ),   /* 0 */
/* 74 */  NdrFcShort( 0x5 ),  /* 5 */
#ifndef _ALPHA_
#ifndef _PPC_
#if !defined(_MIPS_)
/* 76 */  NdrFcShort( 0x1c ), /* x86 Stack
size/offset = 28 */
#else
                                NdrFcShort( 0x20 ), /*
MIPS Stack size/offset = 32 */
#endif
#else
                                NdrFcShort( 0x20 ), /*
PPC Stack size/offset = 32 */
#endif
#else
                                NdrFcShort( 0x28 ), /*
Alpha Stack size/offset = 40 */
#endif
/* 78 */  NdrFcShort( 0x0 ),  /* 0 */
/* 80 */  NdrFcShort( 0x8 ),  /* 8 */
/* 82 */  0x7,                  /* Oi2 Flags:  srv must
size, clt must size, has return, */
                                0x3,                /*
3 */

          /* Parameter txn_in */

/* 84 */  NdrFcShort( 0x8b ), /* Flags:  must size,
must free, in, by val, */
#ifndef _ALPHA_
#ifndef _PPC_
#if !defined(_MIPS_)
/* 86 */  NdrFcShort( 0x4 ),  /* x86 Stack
size/offset = 4 */
#else
                                NdrFcShort( 0x8 ),  /*
MIPS Stack size/offset = 8 */
#endif
#else
                                NdrFcShort( 0x8 ),  /*
PPC Stack size/offset = 8 */
#endif
#else
                                NdrFcShort( 0x8 ),  /*
Alpha Stack size/offset = 8 */
#endif
```


©2005 Hewlett-Packard Company. All rights reserved.

```
/* 88 */  NdrFcShort( 0x3c8 ),          /* Type
Offset=968 */

          /* Parameter txn_out */

/* 90 */  NdrFcShort( 0x4113 ),         /* Flags:
must size, must free, out, simple ref, srv alloc
size=16 */
#ifndef _ALPHA_
#ifndef _PPC_
#if !defined(_MIPS_)
/* 92 */  NdrFcShort( 0x14 ), /* x86 Stack
size/offset = 20 */
#else
                              NdrFcShort( 0x18 ), /*
MIPS Stack size/offset = 24 */
#endif
#else
                              NdrFcShort( 0x18 ), /*
PPC Stack size/offset = 24 */
#endif
#else
                              NdrFcShort( 0x18 ), /*
Alpha Stack size/offset = 24 */
#endif
/* 94 */  NdrFcShort( 0x3da ),          /* Type
Offset=986 */

          /* Return value */

/* 96 */  NdrFcShort( 0x70 ), /* Flags:  out, return,
base type, */
#ifndef _ALPHA_
#ifndef _PPC_
#if !defined(_MIPS_)
/* 98 */  NdrFcShort( 0x18 ), /* x86 Stack
size/offset = 24 */
#else
                              NdrFcShort( 0x1c ), /*
MIPS Stack size/offset = 28 */
#endif
#else
                              NdrFcShort( 0x1c ), /*
PPC Stack size/offset = 28 */
#endif
#else
                              NdrFcShort( 0x20 ), /*
Alpha Stack size/offset = 32 */
#endif
/* 100 */ 0x8,                /* FC_LONG */
                              0x0,                /*
0 */

          /* Procedure StockLevel */

/* 102 */ 0x33,               /* FC_AUTO_HANDLE */
                              0x6c,               /*
Old Flags:  object, Oi2 */
/* 104 */ NdrFcLong( 0x0 ),   /* 0 */
/* 108 */ NdrFcShort( 0x6 ),  /* 6 */
#ifndef _ALPHA_
#ifndef _PPC_
#if !defined(_MIPS_)
/* 110 */ NdrFcShort( 0x1c ), /* x86 Stack
size/offset = 28 */
#else
                              NdrFcShort( 0x20 ), /*
MIPS Stack size/offset = 32 */
#endif
#else
                              NdrFcShort( 0x20 ), /*
PPC Stack size/offset = 32 */
#endif
#else
                              NdrFcShort( 0x28 ), /*
Alpha Stack size/offset = 40 */
#endif
/* 112 */ NdrFcShort( 0x0 ),  /* 0 */
/* 114 */ NdrFcShort( 0x8 ),  /* 8 */
/* 116 */ 0x7,                /* Oi2 Flags:  srv must
size, clt must size, has return, */
                              0x3,                /*
3 */

          /* Parameter txn_in */

/* 118 */ NdrFcShort( 0x8b ), /* Flags:  must size,
must free, in, by val, */
#ifndef _ALPHA_
#ifndef _PPC_
#if !defined(_MIPS_)
/* 120 */ NdrFcShort( 0x4 ),  /* x86 Stack
size/offset = 4 */
#else
                              NdrFcShort( 0x8 ),  /*
MIPS Stack size/offset = 8 */
#endif
#else
                              NdrFcShort( 0x8 ),  /*
PPC Stack size/offset = 8 */
#endif
#else
                              NdrFcShort( 0x8 ),  /*
Alpha Stack size/offset = 8 */
#endif
/* 122 */ NdrFcShort( 0x3c8 ),          /* Type
Offset=968 */

          /* Parameter txn_out */

/* 124 */ NdrFcShort( 0x4113 ),         /* Flags:
must size, must free, out, simple ref, srv alloc
size=16 */
#ifndef _ALPHA_
#ifndef _PPC_
#if !defined(_MIPS_)
/* 126 */ NdrFcShort( 0x14 ), /* x86 Stack
size/offset = 20 */
#else
                              NdrFcShort( 0x18 ), /*
MIPS Stack size/offset = 24 */
#endif
#else
                              NdrFcShort( 0x18 ), /*
PPC Stack size/offset = 24 */
#endif
#else
                              NdrFcShort( 0x18 ), /*
Alpha Stack size/offset = 24 */
#endif
/* 128 */ NdrFcShort( 0x3da ),          /* Type
Offset=986 */

          /* Return value */

/* 130 */ NdrFcShort( 0x70 ), /* Flags:  out, return,
base type, */
#ifndef _ALPHA_
#ifndef _PPC_
#if !defined(_MIPS_)
/* 132 */ NdrFcShort( 0x18 ), /* x86 Stack
size/offset = 24 */
#else
                              NdrFcShort( 0x1c ), /*
MIPS Stack size/offset = 28 */
#endif
#else
                              NdrFcShort( 0x1c ), /*
PPC Stack size/offset = 28 */
#endif
#else
                              NdrFcShort( 0x20 ), /*
Alpha Stack size/offset = 32 */
#endif
/* 134 */ 0x8,                /* FC_LONG */
                              0x0,                /*
0 */

          /* Procedure OrderStatus */

/* 136 */ 0x33,               /* FC_AUTO_HANDLE */
                              0x6c,               /*
Old Flags:  object, Oi2 */
/* 138 */ NdrFcLong( 0x0 ),   /* 0 */
/* 142 */ NdrFcShort( 0x7 ),  /* 7 */
#ifndef _ALPHA_
#ifndef _PPC_
#if !defined(_MIPS_)
/* 144 */ NdrFcShort( 0x1c ), /* x86 Stack
size/offset = 28 */
#else
                              NdrFcShort( 0x20 ), /*
MIPS Stack size/offset = 32 */
#endif
#else
                              NdrFcShort( 0x20 ), /*
PPC Stack size/offset = 32 */
#endif
#else
                              NdrFcShort( 0x28 ), /*
Alpha Stack size/offset = 40 */
#endif
/* 146 */ NdrFcShort( 0x0 ),  /* 0 */
/* 148 */ NdrFcShort( 0x8 ),  /* 8 */
/* 150 */ 0x7,                /* Oi2 Flags:  srv must
size, clt must size, has return, */
                              0x3,                /*
3 */
```


©2005 Hewlett-Packard Company. All rights reserved.

```
          /* Parameter txn_in */

/* 152 */ NdrFcShort( 0x8b ), /* Flags:  must size,
must free, in, by val, */
#ifndef _ALPHA_
#ifndef _PPC_
#if !defined(_MIPS_)
/* 154 */ NdrFcShort( 0x4 ),  /* x86 Stack
size/offset = 4 */
#else
                              NdrFcShort( 0x8 ),  /*
MIPS Stack size/offset = 8 */
#endif
#else
                              NdrFcShort( 0x8 ),  /*
PPC Stack size/offset = 8 */
#endif
#else
                              NdrFcShort( 0x8 ),  /*
Alpha Stack size/offset = 8 */
#endif
/* 156 */ NdrFcShort( 0x3c8 ),          /* Type
Offset=968 */

          /* Parameter txn_out */

/* 158 */ NdrFcShort( 0x4113 ),         /* Flags:
must size, must free, out, simple ref, srv alloc
size=16 */
#ifndef _ALPHA_
#ifndef _PPC_
#if !defined(_MIPS_)
/* 160 */ NdrFcShort( 0x14 ), /* x86 Stack
size/offset = 20 */
#else
                              NdrFcShort( 0x18 ), /*
MIPS Stack size/offset = 24 */
#endif
#else
                              NdrFcShort( 0x18 ), /*
PPC Stack size/offset = 24 */
#endif
#else
                              NdrFcShort( 0x18 ), /*
Alpha Stack size/offset = 24 */
#endif
/* 162 */ NdrFcShort( 0x3da ),          /* Type
Offset=986 */

          /* Return value */

/* 164 */ NdrFcShort( 0x70 ), /* Flags:  out, return,
base type, */
#ifndef _ALPHA_
#ifndef _PPC_
#if !defined(_MIPS_)
/* 166 */ NdrFcShort( 0x18 ), /* x86 Stack
size/offset = 24 */
#else
                              NdrFcShort( 0x1c ), /*
MIPS Stack size/offset = 28 */
#endif
#else
                              NdrFcShort( 0x1c ), /*
PPC Stack size/offset = 28 */
#endif
#else
                              NdrFcShort( 0x20 ), /*
Alpha Stack size/offset = 32 */
#endif
/* 168 */ 0x8,                /* FC_LONG */
                              0x0,                /*
0 */

          /* Procedure CallSetComplete */

/* 170 */ 0x33,               /* FC_AUTO_HANDLE */
                              0x6c,               /*
Old Flags:  object, Oi2 */
/* 172 */ NdrFcLong( 0x0 ),   /* 0 */
/* 176 */ NdrFcShort( 0x8 ),  /* 8 */
#ifndef _ALPHA_
/* 178 */ NdrFcShort( 0x8 ),  /* x86, MIPS, PPC Stack
size/offset = 8 */
#else
                              NdrFcShort( 0x10 ), /*
Alpha Stack size/offset = 16 */
#endif
/* 180 */ NdrFcShort( 0x0 ),  /* 0 */
/* 182 */ NdrFcShort( 0x8 ),  /* 8 */
/* 184 */ 0x4,                /* Oi2 Flags:  has
return, */
                              0x1,                /*
1 */

          /* Return value */

/* 186 */ NdrFcShort( 0x70 ), /* Flags:  out, return,
base type, */
#ifndef _ALPHA_
/* 188 */ NdrFcShort( 0x4 ),  /* x86, MIPS, PPC Stack
size/offset = 4 */
#else
                              NdrFcShort( 0x8 ),  /*
Alpha Stack size/offset = 8 */
#endif
/* 190 */ 0x8,                /* FC_LONG */
                              0x0,                /*
0 */

                              0x0
        }
    };

static const MIDL_TYPE_FORMAT_STRING
__MIDL_TypeFormatString =
    {
        0,
        {
                              NdrFcShort( 0x0 ),  /*
0 */
/*  2 */
                              0x12, 0x0,          /*
FC_UP */
/*  4 */  NdrFcShort( 0x3b0 ),          /* Offset=
944 (948) */
/*  6 */
                              0x2b,               /*
FC_NON_ENCAPSULATED_UNION */
                              0x9,                /*
FC_ULONG */
/*  8 */  0x7,                /* Corr desc: FC_USHORT
*/
                              0x0,                /*
*/
/* 10 */  NdrFcShort( 0xfff8 ),         /* -8 */
/* 12 */  NdrFcShort( 0x2 ),  /* Offset= 2 (14) */
/* 14 */  NdrFcShort( 0x10 ), /* 16 */
/* 16 */  NdrFcShort( 0x2b ), /* 43 */
/* 18 */  NdrFcLong( 0x3 ),   /* 3 */
/* 22 */  NdrFcShort( 0x8008 ),         /* Simple arm
type: FC_LONG */
/* 24 */  NdrFcLong( 0x11 ),  /* 17 */
/* 28 */  NdrFcShort( 0x8001 ),         /* Simple arm
type: FC_BYTE */
/* 30 */  NdrFcLong( 0x2 ),   /* 2 */
/* 34 */  NdrFcShort( 0x8006 ),         /* Simple arm
type: FC_SHORT */
/* 36 */  NdrFcLong( 0x4 ),   /* 4 */
/* 40 */  NdrFcShort( 0x800a ),         /* Simple arm
type: FC_FLOAT */
/* 42 */  NdrFcLong( 0x5 ),   /* 5 */
/* 46 */  NdrFcShort( 0x800c ),         /* Simple arm
type: FC_DOUBLE */
/* 48 */  NdrFcLong( 0xb ),   /* 11 */
/* 52 */  NdrFcShort( 0x8006 ),         /* Simple arm
type: FC_SHORT */
/* 54 */  NdrFcLong( 0xa ),   /* 10 */
/* 58 */  NdrFcShort( 0x8008 ),         /* Simple arm
type: FC_LONG */
/* 60 */  NdrFcLong( 0x6 ),   /* 6 */
/* 64 */  NdrFcShort( 0xd6 ), /* Offset= 214 (278) */
/* 66 */  NdrFcLong( 0x7 ),   /* 7 */
/* 70 */  NdrFcShort( 0x800c ),         /* Simple arm
type: FC_DOUBLE */
/* 72 */  NdrFcLong( 0x8 ),   /* 8 */
/* 76 */  NdrFcShort( 0xd0 ), /* Offset= 208 (284) */
/* 78 */  NdrFcLong( 0xd ),   /* 13 */
/* 82 */  NdrFcShort( 0xe2 ), /* Offset= 226 (308) */
/* 84 */  NdrFcLong( 0x9 ),   /* 9 */
/* 88 */  NdrFcShort( 0xee ), /* Offset= 238 (326) */
/* 90 */  NdrFcLong( 0x2000 ),          /* 8192 */
/* 94 */  NdrFcShort( 0xfa ), /* Offset= 250 (344) */
/* 96 */  NdrFcLong( 0x24 ),  /* 36 */
/* 100 */ NdrFcShort( 0x308 ),          /* Offset=
776 (876) */
/* 102 */ NdrFcLong( 0x4024 ),          /* 16420 */
/* 106 */ NdrFcShort( 0x302 ),          /* Offset=
770 (876) */
/* 108 */ NdrFcLong( 0x4011 ),          /* 16401 */
/* 112 */ NdrFcShort( 0x300 ),          /* Offset=
768 (880) */
/* 114 */ NdrFcLong( 0x4002 ),          /* 16386 */
/* 118 */ NdrFcShort( 0x2fe ),          /* Offset=
766 (884) */
/* 120 */ NdrFcLong( 0x4003 ),          /* 16387 */
/* 124 */ NdrFcShort( 0x2fc ),          /* Offset=
764 (888) */
/* 126 */ NdrFcLong( 0x4004 ),          /* 16388 */
```


©2005 Hewlett-Packard Company. All rights reserved.

```
/* 130 */ NdrFcShort( 0x2fa ),          /* Offset=
762 (892) */
/* 132 */ NdrFcLong( 0x4005 ),          /* 16389 */
/* 136 */ NdrFcShort( 0x2f8 ),          /* Offset=
760 (896) */
/* 138 */ NdrFcLong( 0x400b ),          /* 16395 */
/* 142 */ NdrFcShort( 0x2e6 ),          /* Offset=
742 (884) */
/* 144 */ NdrFcLong( 0x400a ),          /* 16394 */
/* 148 */ NdrFcShort( 0x2e4 ),          /* Offset=
740 (888) */
/* 150 */ NdrFcLong( 0x4006 ),          /* 16390 */
/* 154 */ NdrFcShort( 0x2ea ),          /* Offset=
746 (900) */
/* 156 */ NdrFcLong( 0x4007 ),          /* 16391 */
/* 160 */ NdrFcShort( 0x2e0 ),          /* Offset=
736 (896) */
/* 162 */ NdrFcLong( 0x4008 ),          /* 16392 */
/* 166 */ NdrFcShort( 0x2e2 ),          /* Offset=
738 (904) */
/* 168 */ NdrFcLong( 0x400d ),          /* 16397 */
/* 172 */ NdrFcShort( 0x2e0 ),          /* Offset=
736 (908) */
/* 174 */ NdrFcLong( 0x4009 ),          /* 16393 */
/* 178 */ NdrFcShort( 0x2de ),          /* Offset=
734 (912) */
/* 180 */ NdrFcLong( 0x6000 ),          /* 24576 */
/* 184 */ NdrFcShort( 0x2dc ),          /* Offset=
732 (916) */
/* 186 */ NdrFcLong( 0x400c ),          /* 16396 */
/* 190 */ NdrFcShort( 0x2da ),          /* Offset=
730 (920) */
/* 192 */ NdrFcLong( 0x10 ),  /* 16 */
/* 196 */ NdrFcShort( 0x8002 ),         /* Simple arm
type: FC_CHAR */
/* 198 */ NdrFcLong( 0x12 ),  /* 18 */
/* 202 */ NdrFcShort( 0x8006 ),         /* Simple arm
type: FC_SHORT */
/* 204 */ NdrFcLong( 0x13 ),  /* 19 */
/* 208 */ NdrFcShort( 0x8008 ),         /* Simple arm
type: FC_LONG */
/* 210 */ NdrFcLong( 0x16 ),  /* 22 */
/* 214 */ NdrFcShort( 0x8008 ),         /* Simple arm
type: FC_LONG */
/* 216 */ NdrFcLong( 0x17 ),  /* 23 */
/* 220 */ NdrFcShort( 0x8008 ),         /* Simple arm
type: FC_LONG */
/* 222 */ NdrFcLong( 0xe ),   /* 14 */
/* 226 */ NdrFcShort( 0x2be ),          /* Offset=
702 (928) */
/* 228 */ NdrFcLong( 0x400e ),          /* 16398 */
/* 232 */ NdrFcShort( 0x2c4 ),          /* Offset=
708 (940) */
/* 234 */ NdrFcLong( 0x4010 ),          /* 16400 */
/* 238 */ NdrFcShort( 0x2c2 ),          /* Offset=
706 (944) */
/* 240 */ NdrFcLong( 0x4012 ),          /* 16402 */
/* 244 */ NdrFcShort( 0x280 ),          /* Offset=
640 (884) */
/* 246 */ NdrFcLong( 0x4013 ),          /* 16403 */
/* 250 */ NdrFcShort( 0x27e ),          /* Offset=
638 (888) */
/* 252 */ NdrFcLong( 0x4016 ),          /* 16406 */
/* 256 */ NdrFcShort( 0x278 ),          /* Offset=
632 (888) */
/* 258 */ NdrFcLong( 0x4017 ),          /* 16407 */
/* 262 */ NdrFcShort( 0x272 ),          /* Offset=
626 (888) */
/* 264 */ NdrFcLong( 0x0 ),   /* 0 */
/* 268 */ NdrFcShort( 0x0 ),  /* Offset= 0 (268) */
/* 270 */ NdrFcLong( 0x1 ),   /* 1 */
/* 274 */ NdrFcShort( 0x0 ),  /* Offset= 0 (274) */
/* 276 */ NdrFcShort( 0xffffffff ),     /* Offset= -1
(275) */
/* 278 */
                                 0x15,               /*
FC_STRUCT */
                                 0x7,                /*
7 */
/* 280 */ NdrFcShort( 0x8 ),  /* 8 */
/* 282 */ 0xb,                 /* FC_HYPER */
                                 0x5b,               /*
FC_END */
/* 284 */
                                 0x12, 0x0,          /*
FC_UP */
/* 286 */ NdrFcShort( 0xc ),  /* Offset= 12 (298) */
/* 288 */
                                 0x1b,               /*
FC_CARRAY */
                                 0x1,                /*
1 */
/* 290 */ NdrFcShort( 0x2 ),  /* 2 */
/* 292 */ 0x9,                 /* Corr desc: FC_ULONG
*/
                                 0x0,                /*
*/
/* 294 */ NdrFcShort( 0xfffc ),         /* -4 */
/* 296 */ 0x6,                 /* FC_SHORT */
                                 0x5b,               /*
FC_END */
/* 298 */
                                 0x17,               /*
FC_CSTRUCT */
                                 0x3,                /*
3 */
/* 300 */ NdrFcShort( 0x8 ),  /* 8 */
/* 302 */ NdrFcShort( 0xfffffff2 ),     /* Offset= -
14 (288) */
/* 304 */ 0x8,                 /* FC_LONG */
                                 0x8,                /*
FC_LONG */
/* 306 */ 0x5c,                /* FC_PAD */
                                 0x5b,               /*
FC_END */
/* 308 */
                                 0x2f,               /*
FC_IP */
                                 0x5a,               /*
FC_CONSTANT_IID */
/* 310 */ NdrFcLong( 0x0 ),   /* 0 */
/* 314 */ NdrFcShort( 0x0 ),  /* 0 */
/* 316 */ NdrFcShort( 0x0 ),  /* 0 */
/* 318 */ 0xc0,                /* 192 */
                                 0x0,                /*
0 */
/* 320 */ 0x0,                 /* 0 */
                                 0x0,                /*
0 */
/* 322 */ 0x0,                 /* 0 */
                                 0x0,                /*
0 */
/* 324 */ 0x0,                 /* 0 */
                                 0x46,               /*
70 */
/* 326 */
                                 0x2f,               /*
FC_IP */
                                 0x5a,               /*
FC_CONSTANT_IID */
/* 328 */ NdrFcLong( 0x20400 ),         /* 132096 */
/* 332 */ NdrFcShort( 0x0 ),  /* 0 */
/* 334 */ NdrFcShort( 0x0 ),  /* 0 */
/* 336 */ 0xc0,                /* 192 */
                                 0x0,                /*
0 */
/* 338 */ 0x0,                 /* 0 */
                                 0x0,                /*
0 */
/* 340 */ 0x0,                 /* 0 */
                                 0x0,                /*
0 */
/* 342 */ 0x0,                 /* 0 */
                                 0x46,               /*
70 */
/* 344 */
                                 0x12, 0x10,         /*
FC_UP [pointer_deref] */
/* 346 */ NdrFcShort( 0x2 ),  /* Offset= 2 (348) */
/* 348 */
                                 0x12, 0x0,          /*
FC_UP */
/* 350 */ NdrFcShort( 0x1fc ),          /* Offset=
508 (858) */
/* 352 */
                                 0x2a,               /*
FC_ENCAPSULATED_UNION */
                                 0x49,               /*
73 */
/* 354 */ NdrFcShort( 0x18 ), /* 24 */
/* 356 */ NdrFcShort( 0xa ),  /* 10 */
/* 358 */ NdrFcLong( 0x8 ),   /* 8 */
/* 362 */ NdrFcShort( 0x58 ), /* Offset= 88 (450) */
/* 364 */ NdrFcLong( 0xd ),   /* 13 */
/* 368 */ NdrFcShort( 0x78 ), /* Offset= 120 (488) */
/* 370 */ NdrFcLong( 0x9 ),   /* 9 */
/* 374 */ NdrFcShort( 0x94 ), /* Offset= 148 (522) */
/* 376 */ NdrFcLong( 0xc ),   /* 12 */
/* 380 */ NdrFcShort( 0xbc ), /* Offset= 188 (568) */
/* 382 */ NdrFcLong( 0x24 ),  /* 36 */
/* 386 */ NdrFcShort( 0x114 ),          /* Offset=
276 (662) */
/* 388 */ NdrFcLong( 0x800d ),          /* 32781 */
/* 392 */ NdrFcShort( 0x130 ),          /* Offset=
304 (696) */
/* 394 */ NdrFcLong( 0x10 ),  /* 16 */
/* 398 */ NdrFcShort( 0x148 ),          /* Offset=
328 (726) */
/* 400 */ NdrFcLong( 0x2 ),   /* 2 */
```


©2005 Hewlett-Packard Company. All rights reserved.

```
/* 404 */ NdrFcShort( 0x160 ),          /* Offset=
352 (756) */
/* 406 */ NdrFcLong( 0x3 ),   /* 3 */
/* 410 */ NdrFcShort( 0x178 ),          /* Offset=
376 (786) */
/* 412 */ NdrFcLong( 0x14 ),  /* 20 */
/* 416 */ NdrFcShort( 0x190 ),          /* Offset=
400 (816) */
/* 418 */ NdrFcShort( 0xffffffff ),     /* Offset= -1
(417) */
/* 420 */
                                0x1b,               /*
FC_CARRAY */
                                0x3,                /*
3 */
/* 422 */ NdrFcShort( 0x4 ),  /* 4 */
/* 424 */ 0x19,                /* Corr desc:  field
pointer, FC_ULONG */
                                0x0,                /*
*/
/* 426 */ NdrFcShort( 0x0 ),  /* 0 */
/* 428 */
                                0x4b,               /*
FC_PP */
                                0x5c,               /*
FC_PAD */
/* 430 */
                                0x48,               /*
FC_VARIABLE_REPEAT */
                                0x49,               /*
FC_FIXED_OFFSET */
/* 432 */ NdrFcShort( 0x4 ),  /* 4 */
/* 434 */ NdrFcShort( 0x0 ),  /* 0 */
/* 436 */ NdrFcShort( 0x1 ),  /* 1 */
/* 438 */ NdrFcShort( 0x0 ),  /* 0 */
/* 440 */ NdrFcShort( 0x0 ),  /* 0 */
/* 442 */ 0x12, 0x0,          /* FC_UP */
/* 444 */ NdrFcShort( 0xffffff6e ),     /* Offset= -
146 (298) */
/* 446 */
                                0x5b,               /*
FC_END */

                                0x8,                /*
FC_LONG */
/* 448 */ 0x5c,               /* FC_PAD */
                                0x5b,               /*
FC_END */
/* 450 */
                                0x16,               /*
FC_PSTRUCT */
                                0x3,                /*
3 */
/* 452 */ NdrFcShort( 0x8 ),  /* 8 */
/* 454 */
                                0x4b,               /*
FC_PP */
                                0x5c,               /*
FC_PAD */
/* 456 */
                                0x46,               /*
FC_NO_REPEAT */
                                0x5c,               /*
FC_PAD */
/* 458 */ NdrFcShort( 0x4 ),  /* 4 */
/* 460 */ NdrFcShort( 0x4 ),  /* 4 */
/* 462 */ 0x11, 0x0,          /* FC_RP */
/* 464 */ NdrFcShort( 0xffffffd4 ),     /* Offset= -
44 (420) */
/* 466 */
                                0x5b,               /*
FC_END */

                                0x8,                /*
FC_LONG */
/* 468 */ 0x8,                /* FC_LONG */
                                0x5b,               /*
FC_END */
/* 470 */
                                0x21,               /*
FC_BOGUS_ARRAY */
                                0x3,                /*
3 */
/* 472 */ NdrFcShort( 0x0 ),  /* 0 */
/* 474 */ 0x19,                /* Corr desc:  field
pointer, FC_ULONG */
                                0x0,                /*
*/
/* 476 */ NdrFcShort( 0x0 ),  /* 0 */
/* 478 */ NdrFcLong( 0xffffffff ),      /* -1 */
/* 482 */ 0x4c,                /* FC_EMBEDDED_COMPLEX
*/
                                0x0,                /*
0 */
/* 484 */ NdrFcShort( 0xffffff50 ),     /* Offset= -
176 (308) */
/* 486 */ 0x5c,                /* FC_PAD */
                                0x5b,               /*
FC_END */
/* 488 */
                                0x1a,               /*
FC_BOGUS_STRUCT */
                                0x3,                /*
3 */
/* 490 */ NdrFcShort( 0x8 ),  /* 8 */
/* 492 */ NdrFcShort( 0x0 ),  /* 0 */
/* 494 */ NdrFcShort( 0x6 ),  /* Offset= 6 (500) */
/* 496 */ 0x8,                /* FC_LONG */
                                0x36,               /*
FC_POINTER */
/* 498 */ 0x5c,                /* FC_PAD */
                                0x5b,               /*
FC_END */
/* 500 */
                                0x11, 0x0,          /*
FC_RP */
/* 502 */ NdrFcShort( 0xffffffe0 ),     /* Offset= -
32 (470) */
/* 504 */
                                0x21,               /*
FC_BOGUS_ARRAY */
                                0x3,                /*
3 */
/* 506 */ NdrFcShort( 0x0 ),  /* 0 */
/* 508 */ 0x19,                /* Corr desc:  field
pointer, FC_ULONG */
                                0x0,                /*
*/
/* 510 */ NdrFcShort( 0x0 ),  /* 0 */
/* 512 */ NdrFcLong( 0xffffffff ),      /* -1 */
/* 516 */ 0x4c,                /* FC_EMBEDDED_COMPLEX
*/
                                0x0,                /*
0 */
/* 518 */ NdrFcShort( 0xffffff40 ),     /* Offset= -
192 (326) */
/* 520 */ 0x5c,                /* FC_PAD */
                                0x5b,               /*
FC_END */
/* 522 */
                                0x1a,               /*
FC_BOGUS_STRUCT */
                                0x3,                /*
3 */
/* 524 */ NdrFcShort( 0x8 ),  /* 8 */
/* 526 */ NdrFcShort( 0x0 ),  /* 0 */
/* 528 */ NdrFcShort( 0x6 ),  /* Offset= 6 (534) */
/* 530 */ 0x8,                /* FC_LONG */
                                0x36,               /*
FC_POINTER */
/* 532 */ 0x5c,                /* FC_PAD */
                                0x5b,               /*
FC_END */
/* 534 */
                                0x11, 0x0,          /*
FC_RP */
/* 536 */ NdrFcShort( 0xffffffe0 ),     /* Offset= -
32 (504) */
/* 538 */
                                0x1b,               /*
FC_CARRAY */
                                0x3,                /*
3 */
/* 540 */ NdrFcShort( 0x4 ),  /* 4 */
/* 542 */ 0x19,                /* Corr desc:  field
pointer, FC_ULONG */
                                0x0,                /*
*/
/* 544 */ NdrFcShort( 0x0 ),  /* 0 */
/* 546 */
                                0x4b,               /*
FC_PP */
                                0x5c,               /*
FC_PAD */
/* 548 */
                                0x48,               /*
FC_VARIABLE_REPEAT */
                                0x49,               /*
FC_FIXED_OFFSET */
/* 550 */ NdrFcShort( 0x4 ),  /* 4 */
/* 552 */ NdrFcShort( 0x0 ),  /* 0 */
/* 554 */ NdrFcShort( 0x1 ),  /* 1 */
/* 556 */ NdrFcShort( 0x0 ),  /* 0 */
/* 558 */ NdrFcShort( 0x0 ),  /* 0 */
/* 560 */ 0x12, 0x0,          /* FC_UP */
/* 562 */ NdrFcShort( 0x182 ),          /* Offset=
386 (948) */
```


©2005 Hewlett-Packard Company. All rights reserved.

```
/* 564 */
                                0x5b,               /*
FC_END */

                                0x8,                /*
FC_LONG */
/* 566 */ 0x5c,                 /* FC_PAD */
                                0x5b,               /*
FC_END */
/* 568 */
                                0x1a,               /*
FC_BOGUS_STRUCT */
                                0x3,                /*
3 */
/* 570 */ NdrFcShort( 0x8 ),  /* 8 */
/* 572 */ NdrFcShort( 0x0 ),  /* 0 */
/* 574 */ NdrFcShort( 0x6 ),  /* Offset= 6 (580) */
/* 576 */ 0x8,                 /* FC_LONG */
                                0x36,               /*
FC_POINTER */
/* 578 */ 0x5c,                 /* FC_PAD */
                                0x5b,               /*
FC_END */
/* 580 */
                                0x11, 0x0,          /*
FC_RP */
/* 582 */ NdrFcShort( 0xffffffd4 ),     /* Offset= -
44 (538) */
/* 584 */
                                0x2f,               /*
FC_IP */
                                0x5a,               /*
FC_CONSTANT_IID */
/* 586 */ NdrFcLong( 0x2f ),  /* 47 */
/* 590 */ NdrFcShort( 0x0 ),  /* 0 */
/* 592 */ NdrFcShort( 0x0 ),  /* 0 */
/* 594 */ 0xc0,                /* 192 */
                                0x0,                /*
0 */
/* 596 */ 0x0,                 /* 0 */
                                0x0,                /*
0 */
/* 598 */ 0x0,                 /* 0 */
                                0x0,                /*
0 */
/* 600 */ 0x0,                 /* 0 */
                                0x46,               /*
70 */
/* 602 */
                                0x1b,               /*
FC_CARRAY */
                                0x0,                /*
0 */
/* 604 */ NdrFcShort( 0x1 ),  /* 1 */
/* 606 */ 0x19,                /* Corr desc:  field
pointer, FC_ULONG */
                                0x0,                /*
*/
/* 608 */ NdrFcShort( 0x4 ),  /* 4 */
/* 610 */ 0x1,                 /* FC_BYTE */
                                0x5b,               /*
FC_END */
/* 612 */
                                0x1a,               /*
FC_BOGUS_STRUCT */
                                0x3,                /*
3 */
/* 614 */ NdrFcShort( 0x10 ), /* 16 */
/* 616 */ NdrFcShort( 0x0 ),  /* 0 */
/* 618 */ NdrFcShort( 0xa ),  /* Offset= 10 (628) */
/* 620 */ 0x8,                 /* FC_LONG */
                                0x8,                /*
FC_LONG */
/* 622 */ 0x4c,                /* FC_EMBEDDED_COMPLEX
*/
                                0x0,                /*
0 */
/* 624 */ NdrFcShort( 0xffffffd8 ),     /* Offset= -
40 (584) */
/* 626 */ 0x36,                /* FC_POINTER */
                                0x5b,               /*
FC_END */
/* 628 */
                                0x12, 0x0,          /*
FC_UP */
/* 630 */ NdrFcShort( 0xffffffe4 ),     /* Offset= -
28 (602) */
/* 632 */
                                0x1b,               /*
FC_CARRAY */
                                0x3,                /*
3 */
/* 634 */ NdrFcShort( 0x4 ),  /* 4 */
/* 636 */ 0x19,                /* Corr desc:  field
pointer, FC_ULONG */
                                0x0,                /*
*/
/* 638 */ NdrFcShort( 0x0 ),  /* 0 */
/* 640 */
                                0x4b,               /*
FC_PP */
                                0x5c,               /*
FC_PAD */
/* 642 */
                                0x48,               /*
FC_VARIABLE_REPEAT */
                                0x49,               /*
FC_FIXED_OFFSET */
/* 644 */ NdrFcShort( 0x4 ),  /* 4 */
/* 646 */ NdrFcShort( 0x0 ),  /* 0 */
/* 648 */ NdrFcShort( 0x1 ),  /* 1 */
/* 650 */ NdrFcShort( 0x0 ),  /* 0 */
/* 652 */ NdrFcShort( 0x0 ),  /* 0 */
/* 654 */ 0x12, 0x0,           /* FC_UP */
/* 656 */ NdrFcShort( 0xffffffd4 ),     /* Offset= -
44 (612) */
/* 658 */
                                0x5b,               /*
FC_END */

                                0x8,                /*
FC_LONG */
/* 660 */ 0x5c,                 /* FC_PAD */
                                0x5b,               /*
FC_END */
/* 662 */
                                0x1a,               /*
FC_BOGUS_STRUCT */
                                0x3,                /*
3 */
/* 664 */ NdrFcShort( 0x8 ),  /* 8 */
/* 666 */ NdrFcShort( 0x0 ),  /* 0 */
/* 668 */ NdrFcShort( 0x6 ),  /* Offset= 6 (674) */
/* 670 */ 0x8,                 /* FC_LONG */
                                0x36,               /*
FC_POINTER */
/* 672 */ 0x5c,                 /* FC_PAD */
                                0x5b,               /*
FC_END */
/* 674 */
                                0x11, 0x0,          /*
FC_RP */
/* 676 */ NdrFcShort( 0xffffffd4 ),     /* Offset= -
44 (632) */
/* 678 */
                                0x1d,               /*
FC_SMFARRAY */
                                0x0,                /*
0 */
/* 680 */ NdrFcShort( 0x8 ),  /* 8 */
/* 682 */ 0x1,                 /* FC_BYTE */
                                0x5b,               /*
FC_END */
/* 684 */
                                0x15,               /*
FC_STRUCT */
                                0x3,                /*
3 */
/* 686 */ NdrFcShort( 0x10 ), /* 16 */
/* 688 */ 0x8,                 /* FC_LONG */
                                0x6,                /*
FC_SHORT */
/* 690 */ 0x6,                 /* FC_SHORT */
                                0x4c,               /*
FC_EMBEDDED_COMPLEX */
/* 692 */ 0x0,                 /* 0 */
                                NdrFcShort( 0xfffffff1
),        /* Offset= -15 (678) */
                                0x5b,               /*
FC_END */
/* 696 */
                                0x1a,               /*
FC_BOGUS_STRUCT */
                                0x3,                /*
3 */
/* 698 */ NdrFcShort( 0x18 ), /* 24 */
/* 700 */ NdrFcShort( 0x0 ),  /* 0 */
/* 702 */ NdrFcShort( 0xa ),  /* Offset= 10 (712) */
/* 704 */ 0x8,                 /* FC_LONG */
                                0x36,               /*
FC_POINTER */
/* 706 */ 0x4c,                /* FC_EMBEDDED_COMPLEX
*/
                                0x0,                /*
0 */
/* 708 */ NdrFcShort( 0xffffffe8 ),     /* Offset= -
24 (684) */
/* 710 */ 0x5c,                 /* FC_PAD */
```


©2005 Hewlett-Packard Company. All rights reserved.

```
                                0x5b,               /*
FC_END */
/* 712 */
                                0x11, 0x0,          /*
FC_RP */
/* 714 */ NdrFcShort( 0xfffff0c ),     /* Offset= -
244 (470) */
/* 716 */
                                0x1b,               /*
FC_CARRAY */
                                0x0,                /*
0 */
/* 718 */ NdrFcShort( 0x1 ),  /* 1 */
/* 720 */ 0x19,               /* Corr desc:  field
pointer, FC_ULONG */
                                0x0,                /*
*/
/* 722 */ NdrFcShort( 0x0 ),  /* 0 */
/* 724 */ 0x1,                /* FC_BYTE */
                                0x5b,               /*
FC_END */
/* 726 */
                                0x16,               /*
FC_PSTRUCT */
                                0x3,                /*
3 */
/* 728 */ NdrFcShort( 0x8 ),  /* 8 */
/* 730 */
                                0x4b,               /*
FC_PP */
                                0x5c,               /*
FC_PAD */
/* 732 */
                                0x46,               /*
FC_NO_REPEAT */
                                0x5c,               /*
FC_PAD */
/* 734 */ NdrFcShort( 0x4 ),  /* 4 */
/* 736 */ NdrFcShort( 0x4 ),  /* 4 */
/* 738 */ 0x12, 0x0,          /* FC_UP */
/* 740 */ NdrFcShort( 0xffffffe8 ),     /* Offset= -
24 (716) */
/* 742 */
                                0x5b,               /*
FC_END */

                                0x8,                /*
FC_LONG */
/* 744 */ 0x8,                /* FC_LONG */
                                0x5b,               /*
FC_END */
/* 746 */
                                0x1b,               /*
FC_CARRAY */
                                0x1,                /*
1 */
/* 748 */ NdrFcShort( 0x2 ),  /* 2 */
/* 750 */ 0x19,               /* Corr desc:  field
pointer, FC_ULONG */
                                0x0,                /*
*/
/* 752 */ NdrFcShort( 0x0 ),  /* 0 */
/* 754 */ 0x6,                /* FC_SHORT */
                                0x5b,               /*
FC_END */
/* 756 */
                                0x16,               /*
FC_PSTRUCT */
                                0x3,                /*
3 */
/* 758 */ NdrFcShort( 0x8 ),  /* 8 */
/* 760 */
                                0x4b,               /*
FC_PP */
                                0x5c,               /*
FC_PAD */
/* 762 */
                                0x46,               /*
FC_NO_REPEAT */
                                0x5c,               /*
FC_PAD */
/* 764 */ NdrFcShort( 0x4 ),  /* 4 */
/* 766 */ NdrFcShort( 0x4 ),  /* 4 */
/* 768 */ 0x12, 0x0,          /* FC_UP */
/* 770 */ NdrFcShort( 0xffffffe8 ),     /* Offset= -
24 (746) */
/* 772 */
                                0x5b,               /*
FC_END */

                                0x8,                /*
FC_LONG */
/* 774 */ 0x8,                /* FC_LONG */
                                0x5b,               /*
FC_END */
/* 776 */
                                0x1b,               /*
FC_CARRAY */
                                0x3,                /*
3 */
/* 778 */ NdrFcShort( 0x4 ),  /* 4 */
/* 780 */ 0x19,               /* Corr desc:  field
pointer, FC_ULONG */
                                0x0,                /*
*/
/* 782 */ NdrFcShort( 0x0 ),  /* 0 */
/* 784 */ 0x8,                /* FC_LONG */
                                0x5b,               /*
FC_END */
/* 786 */
                                0x16,               /*
FC_PSTRUCT */
                                0x3,                /*
3 */
/* 788 */ NdrFcShort( 0x8 ),  /* 8 */
/* 790 */
                                0x4b,               /*
FC_PP */
                                0x5c,               /*
FC_PAD */
/* 792 */
                                0x46,               /*
FC_NO_REPEAT */
                                0x5c,               /*
FC_PAD */
/* 794 */ NdrFcShort( 0x4 ),  /* 4 */
/* 796 */ NdrFcShort( 0x4 ),  /* 4 */
/* 798 */ 0x12, 0x0,          /* FC_UP */
/* 800 */ NdrFcShort( 0xffffffe8 ),     /* Offset= -
24 (776) */
/* 802 */
                                0x5b,               /*
FC_END */

                                0x8,                /*
FC_LONG */
/* 804 */ 0x8,                /* FC_LONG */
                                0x5b,               /*
FC_END */
/* 806 */
                                0x1b,               /*
FC_CARRAY */
                                0x7,                /*
7 */
/* 808 */ NdrFcShort( 0x8 ),  /* 8 */
/* 810 */ 0x19,               /* Corr desc:  field
pointer, FC_ULONG */
                                0x0,                /*
*/
/* 812 */ NdrFcShort( 0x0 ),  /* 0 */
/* 814 */ 0xb,                /* FC_HYPER */
                                0x5b,               /*
FC_END */
/* 816 */
                                0x16,               /*
FC_PSTRUCT */
                                0x3,                /*
3 */
/* 818 */ NdrFcShort( 0x8 ),  /* 8 */
/* 820 */
                                0x4b,               /*
FC_PP */
                                0x5c,               /*
FC_PAD */
/* 822 */
                                0x46,               /*
FC_NO_REPEAT */
                                0x5c,               /*
FC_PAD */
/* 824 */ NdrFcShort( 0x4 ),  /* 4 */
/* 826 */ NdrFcShort( 0x4 ),  /* 4 */
/* 828 */ 0x12, 0x0,          /* FC_UP */
/* 830 */ NdrFcShort( 0xffffffe8 ),     /* Offset= -
24 (806) */
/* 832 */
                                0x5b,               /*
FC_END */

                                0x8,                /*
FC_LONG */
/* 834 */ 0x8,                /* FC_LONG */
                                0x5b,               /*
FC_END */
/* 836 */
                                0x15,               /*
FC_STRUCT */
                                0x3,                /*
3 */
/* 838 */ NdrFcShort( 0x8 ),  /* 8 */
```


©2005 Hewlett-Packard Company. All rights reserved.

```
/* 840 */ 0x8,                /* FC_LONG */
                              0x8,                /*
FC_LONG */
/* 842 */ 0x5c,               /* FC_PAD */
                              0x5b,               /*
FC_END */
/* 844 */
                              0x1b,               /*
FC_CARRAY */
                              0x3,                /*
3 */
/* 846 */ NdrFcShort( 0x8 ),  /* 8 */
/* 848 */ 0x7,                /* Corr desc: FC_USHORT
*/
                              0x0,                /*
*/
/* 850 */ NdrFcShort( 0xffd8 ),         /* -40 */
/* 852 */ 0x4c,               /* FC_EMBEDDED_COMPLEX
*/
                              0x0,                /*
0 */
/* 854 */ NdrFcShort( 0xffffffee ),     /* Offset= -
18 (836) */
/* 856 */ 0x5c,               /* FC_PAD */
                              0x5b,               /*
FC_END */
/* 858 */
                              0x1a,               /*
FC_BOGUS_STRUCT */
                              0x3,                /*
3 */
/* 860 */ NdrFcShort( 0x28 ), /* 40 */
/* 862 */ NdrFcShort( 0xffffffee ),     /* Offset= -
18 (844) */
/* 864 */ NdrFcShort( 0x0 ),  /* Offset= 0 (864) */
/* 866 */ 0x6,                /* FC_SHORT */
                              0x6,                /*
FC_SHORT */
/* 868 */ 0x38,               /* FC_ALIGNM4 */
                              0x8,                /*
FC_LONG */
/* 870 */ 0x8,                /* FC_LONG */
                              0x4c,               /*
FC_EMBEDDED_COMPLEX */
/* 872 */ 0x0,                /* 0 */
                              NdrFcShort( 0xfffffdf7
),        /* Offset= -521 (352) */
                              0x5b,               /*
FC_END */
/* 876 */
                              0x12, 0x0,          /*
FC_UP */
/* 878 */ NdrFcShort( 0xffffef6 ),     /* Offset= -
266 (612) */
/* 880 */
                              0x12, 0x8,          /*
FC_UP [simple_pointer] */
/* 882 */ 0x1,                /* FC_BYTE */
                              0x5c,               /*
FC_PAD */
/* 884 */
                              0x12, 0x8,          /*
FC_UP [simple_pointer] */
/* 886 */ 0x6,                /* FC_SHORT */
                              0x5c,               /*
FC_PAD */
/* 888 */
                              0x12, 0x8,          /*
FC_UP [simple_pointer] */
/* 890 */ 0x8,                /* FC_LONG */
                              0x5c,               /*
FC_PAD */
/* 892 */
                              0x12, 0x8,          /*
FC_UP [simple_pointer] */
/* 894 */ 0xa,                /* FC_FLOAT */
                              0x5c,               /*
FC_PAD */
/* 896 */
                              0x12, 0x8,          /*
FC_UP [simple_pointer] */
/* 898 */ 0xc,                /* FC_DOUBLE */
                              0x5c,               /*
FC_PAD */
/* 900 */
                              0x12, 0x0,          /*
FC_UP */
/* 902 */ NdrFcShort( 0xfffffd90 ),     /* Offset= -
624 (278) */
/* 904 */
                              0x12, 0x10,         /*
FC_UP [pointer_deref] */
/* 906 */ NdrFcShort( 0xfffffd92 ),     /* Offset= -
622 (284) */
/* 908 */
                              0x12, 0x10,         /*
FC_UP [pointer_deref] */
/* 910 */ NdrFcShort( 0xfffffda6 ),     /* Offset= -
602 (308) */
/* 912 */
                              0x12, 0x10,         /*
FC_UP [pointer_deref] */
/* 914 */ NdrFcShort( 0xfffffdb4 ),     /* Offset= -
588 (326) */
/* 916 */
                              0x12, 0x10,         /*
FC_UP [pointer_deref] */
/* 918 */ NdrFcShort( 0xfffffdc2 ),     /* Offset= -
574 (344) */
/* 920 */
                              0x12, 0x10,         /*
FC_UP [pointer_deref] */
/* 922 */ NdrFcShort( 0x2 ),  /* Offset= 2 (924) */
/* 924 */
                              0x12, 0x0,          /*
FC_UP */
/* 926 */ NdrFcShort( 0x16 ), /* Offset= 22 (948) */
/* 928 */
                              0x15,               /*
FC_STRUCT */
                              0x7,                /*
7 */
/* 930 */ NdrFcShort( 0x10 ), /* 16 */
/* 932 */ 0x6,                /* FC_SHORT */
                              0x1,                /*
FC_BYTE */
/* 934 */ 0x1,                /* FC_BYTE */
                              0x38,               /*
FC_ALIGNM4 */
/* 936 */ 0x8,                /* FC_LONG */
                              0x39,               /*
FC_ALIGNM8 */
/* 938 */ 0xb,                /* FC_HYPER */
                              0x5b,               /*
FC_END */
/* 940 */
                              0x12, 0x0,          /*
FC_UP */
/* 942 */ NdrFcShort( 0xfffffff2 ),     /* Offset= -
14 (928) */
/* 944 */
                              0x12, 0x8,          /*
FC_UP [simple_pointer] */
/* 946 */ 0x2,                /* FC_CHAR */
                              0x5c,               /*
FC_PAD */
/* 948 */
                              0x1a,               /*
FC_BOGUS_STRUCT */
                              0x7,                /*
7 */
/* 950 */ NdrFcShort( 0x20 ), /* 32 */
/* 952 */ NdrFcShort( 0x0 ),  /* 0 */
/* 954 */ NdrFcShort( 0x0 ),  /* Offset= 0 (954) */
/* 956 */ 0x8,                /* FC_LONG */
                              0x8,                /*
FC_LONG */
/* 958 */ 0x6,                /* FC_SHORT */
                              0x6,                /*
FC_SHORT */
/* 960 */ 0x6,                /* FC_SHORT */
                              0x6,                /*
FC_SHORT */
/* 962 */ 0x4c,               /* FC_EMBEDDED_COMPLEX
*/
                              0x0,                /*
0 */
/* 964 */ NdrFcShort( 0xfffffc42 ),     /* Offset= -
958 (6) */
/* 966 */ 0x5c,               /* FC_PAD */
                              0x5b,               /*
FC_END */
/* 968 */ 0xb4,               /* FC_USER_MARSHAL */
                              0x83,               /*
131 */
/* 970 */ NdrFcShort( 0x0 ),  /* 0 */
/* 972 */ NdrFcShort( 0x10 ), /* 16 */
/* 974 */ NdrFcShort( 0x0 ),  /* 0 */
/* 976 */ NdrFcShort( 0xfffffc32 ),     /* Offset= -
974 (2) */
/* 978 */
                              0x11, 0x4,          /*
FC_RP [alloced_on_stack] */
/* 980 */ NdrFcShort( 0x6 ),  /* Offset= 6 (986) */
/* 982 */
                              0x13, 0x0,          /*
FC_OP */
/* 984 */ NdrFcShort( 0xfffffdc ),      /* Offset= -
36 (948) */
```


©2005 Hewlett-Packard Company. All rights reserved.

```
/* 986 */ 0xb4,                /* FC_USER_MARSHAL */
                               0x83,                /*
131 */
/* 988 */ NdrFcShort( 0x0 ),  /* 0 */
/* 990 */ NdrFcShort( 0x10 ), /* 16 */
/* 992 */ NdrFcShort( 0x0 ),  /* 0 */
/* 994 */ NdrFcShort( 0xffffffff4 ),     /* Offset= -
12 (982) */

                               0x0
        }
    };

const CInterfaceProxyVtbl *
_tpcc_com_ps_ProxyVtblList[] =
{
    ( CInterfaceProxyVtbl *) &_ITPCCProxyVtbl,
    0
};

const CInterfaceStubVtbl *
_tpcc_com_ps_StubVtblList[] =
{
    ( CInterfaceStubVtbl *) &_ITPCCStubVtbl,
    0
};

PCInterfaceName const
_tpcc_com_ps_InterfaceNamesList[] =
{
    "ITPCC",
    0
};


#define _tpcc_com_ps_CHECK_IID(n)
          IID_GENERIC_CHECK_IID( _tpcc_com_ps, pIID,
n)

int __stdcall _tpcc_com_ps_IID_Lookup( const IID *
pIID, int * pIndex )
{

    if(!_tpcc_com_ps_CHECK_IID(0))
        {
        *pIndex = 0;
        return 1;
        }

    return 0;
}

const ExtendedProxyFileInfo tpcc_com_ps_ProxyFileInfo
=
{
    (PCInterfaceProxyVtblList *) &
_tpcc_com_ps_ProxyVtblList,
    (PCInterfaceStubVtblList *) &
_tpcc_com_ps_StubVtblList,
    (const PCInterfaceName * ) &
_tpcc_com_ps_InterfaceNamesList,
    0, // no delegation
    & _tpcc_com_ps_IID_Lookup,
    1,
    2,
    0, /* table of [async_uuid] interfaces */
    0, /* Filler1 */
    0, /* Filler2 */
    0  /* Filler3 */
};


#endif /* !defined(_M_IA64) && !defined(_M_AXP64)*/


#pragma warning( disable: 4049 )  /* more than 64k
source lines */

/* this ALWAYS GENERATED file contains the proxy stub
code */


 /* File created by MIDL compiler version 5.03.0280
*/
/* at Thu Dec 13 23:13:08 2001
 */
/* Compiler settings for .\src\tpcc_com_ps.idl:
    Oicf (OptLev=i2), W1, Zp8, env=Win64 (32b
run,appending), ms_ext, c_ext, robust
    error checks: allocation ref bounds_check enum
stub_data
    VC __declspec() decoration level:
         __declspec(uuid()), __declspec(selectany),
__declspec(novtable)
         DECLSPEC_UUID(), MIDL_INTERFACE()
*/
//@@MIDL_FILE_HEADING(  )

#if defined(_M_IA64) || defined(_M_AXP64)
#define USE_STUBLESS_PROXY


/* verify that the <rpcproxy.h> version is high
enough to compile this file*/
#ifndef __REDQ_RPCPROXY_H_VERSION__
#define __REQUIRED_RPCPROXY_H_VERSION__ 475
#endif


#include "rpcproxy.h"
#ifndef __RPCPROXY_H_VERSION__
#error this stub requires an updated version of
<rpcproxy.h>
#endif // __RPCPROXY_H_VERSION__


#include "tpcc_com_ps.h"

#define TYPE_FORMAT_STRING_SIZE   979
#define PROC_FORMAT_STRING_SIZE   253
#define TRANSMIT_AS_TABLE_SIZE    0
#define WIRE_MARSHAL_TABLE_SIZE   1

typedef struct _MIDL_TYPE_FORMAT_STRING
    {
    short          Pad;
    unsigned char  Format[ TYPE_FORMAT_STRING_SIZE ];
    } MIDL_TYPE_FORMAT_STRING;

typedef struct _MIDL_PROC_FORMAT_STRING
    {
    short          Pad;
    unsigned char  Format[ PROC_FORMAT_STRING_SIZE ];
    } MIDL_PROC_FORMAT_STRING;


extern const MIDL_TYPE_FORMAT_STRING
__MIDL_TypeFormatString;
extern const MIDL_PROC_FORMAT_STRING
__MIDL_ProcFormatString;


/* Standard interface: __MIDL_itf_tpcc_com_ps_0000,
ver. 0.0,

GUID={0x00000000,0x0000,0x0000,{0x00,0x00,0x00,0x00,0
x00,0x00,0x00,0x00}} */


/* Object interface: IUnknown, ver. 0.0,

GUID={0x00000000,0x0000,0x0000,{0xC0,0x00,0x00,0x00,0
x00,0x00,0x00,0x46}} */


/* Object interface: ITPCC, ver. 0.0,

GUID={0xFEEE6AA2,0x84B1,0x11d2,{0xBA,0x47,0x00,0xC0,0
x4F,0xBF,0xE0,0x8B}} */


extern const MIDL_STUB_DESC Object_StubDesc;


extern const MIDL_SERVER_INFO ITPCC_ServerInfo;

#pragma code_seg(".orpc")
static const unsigned short
ITPCC_FormatStringOffsetTable[] =
    {
    0,
    44,
    88,
    132,
    176,
    220
    };

static const MIDL_SERVER_INFO ITPCC_ServerInfo =
    {
    &Object_StubDesc,
    0,
    __MIDL_ProcFormatString.Format,
    &ITPCC_FormatStringOffsetTable[-3],
    0,
    0,
    0,
    0
    };
```


©2005 Hewlett-Packard Company. All rights reserved.

```
static const MIDL_STUBLESS_PROXY_INFO ITPCC_ProxyInfo
=
    {
    &Object_StubDesc,
    __MIDL_ProcFormatString.Format,
    &ITPCC_FormatStringOffsetTable[-3],
    0,
    0,
    0
    };

CINTERFACE_PROXY_VTABLE(9) _ITPCCProxyVtbl =
{
    &ITPCC_ProxyInfo,
    &IID_ITPCC,
    IUnknown_QueryInterface_Proxy,
    IUnknown_AddRef_Proxy,
    IUnknown_Release_Proxy ,
    (void *)-1 /* ITPCC::NewOrder */ ,
    (void *)-1 /* ITPCC::Payment */ ,
    (void *)-1 /* ITPCC::Delivery */ ,
    (void *)-1 /* ITPCC::StockLevel */ ,
    (void *)-1 /* ITPCC::OrderStatus */ ,
    (void *)-1 /* ITPCC::CallSetComplete */
};

const CInterfaceStubVtbl _ITPCCStubVtbl =
{
    &IID_ITPCC,
    &ITPCC_ServerInfo,
    9,
    0, /* pure interpreted */
    CStdStubBuffer_METHODS
};

extern const USER_MARSHAL_ROUTINE_QUADRUPLE
UserMarshalRoutines[ WIRE_MARSHAL_TABLE_SIZE ];

static const MIDL_STUB_DESC Object_StubDesc =
    {
    0,
    NdrOleAllocate,
    NdrOleFree,
    0,
    0,
    0,
    0,
    0,
    __MIDL_TypeFormatString.Format,
    1, /* -error bounds_check flag */
    0x50002, /* Ndr library version */
    0,
    0x5030118, /* MIDL Version 5.3.280 */
    0,
    UserMarshalRoutines,
    0,  /* notify & notify_flag routine table */
    0x1, /* MIDL flag */
    0,  /* Reserved3 */
    0,  /* Reserved4 */
    0   /* Reserved5 */
    };
```

```
#pragma data_seg(".rdata")

static const USER_MARSHAL_ROUTINE_QUADRUPLE
UserMarshalRoutines[ WIRE_MARSHAL_TABLE_SIZE ] =
        {

            {
            VARIANT_UserSize
            ,VARIANT_UserMarshal
            ,VARIANT_UserUnmarshal
            ,VARIANT_UserFree
            }

        };


#if !defined(__RPC_WIN64__)
#error  Invalid build platform for this stub.
#endif

static const MIDL_PROC_FORMAT_STRING
__MIDL_ProcFormatString =
    {
        0,
        {

          /* Procedure NewOrder */

                                0x33,               /*
FC_AUTO_HANDLE */
                                0x6c,               /*
Old Flags:  object, Oi2 */
/*  2 */  NdrFcLong( 0x0 ),   /* 0 */
/*  6 */  NdrFcShort( 0x3 ),  /* 3 */
#ifndef _ALPHA_
/*  8 */  NdrFcShort( 0x38 ), /* ia64 Stack
size/offset = 56 */
#else
                                NdrFcShort( 0x30 ), /*
axp64 Stack size/offset = 48 */
#endif
/* 10 */  NdrFcShort( 0x0 ),  /* 0 */
/* 12 */  NdrFcShort( 0x8 ),  /* 8 */
/* 14 */  0x47,               /* Oi2 Flags:  srv must
size, clt must size, has return, has ext, */
                                0x3,                /*
3 */
/* 16 */  0xa,                /* 10 */
                                0x7,                /*
Ext Flags:  new corr desc, clt corr check, srv corr
check, */
/* 18 */  NdrFcShort( 0x20 ), /* 32 */
/* 20 */  NdrFcShort( 0x20 ), /* 32 */
/* 22 */  NdrFcShort( 0x0 ),  /* 0 */
/* 24 */  NdrFcShort( 0x0 ),  /* 0 */

          /* Parameter txn_in */

/* 26 */  NdrFcShort( 0x8b ), /* Flags:  must size,
must free, in, by val, */
#ifndef _ALPHA_
/* 28 */  NdrFcShort( 0x10 ), /* ia64 Stack
size/offset = 16 */
```

```
#else
                                NdrFcShort( 0x8 ),  /*
axp64 Stack size/offset = 8 */
#endif
/* 30 */  NdrFcShort( 0x3b6 ),          /* Type
Offset=950 */

          /* Parameter txn_out */

/* 32 */  NdrFcShort( 0x6113 ),         /* Flags:
must size, must free, out, simple ref, srv alloc
size=24 */
#ifndef _ALPHA_
/* 34 */  NdrFcShort( 0x28 ), /* ia64 Stack
size/offset = 40 */
#else
                                NdrFcShort( 0x20 ), /*
axp64 Stack size/offset = 32 */
#endif
/* 36 */  NdrFcShort( 0x3c8 ),          /* Type
Offset=968 */

          /* Return value */

/* 38 */  NdrFcShort( 0x70 ), /* Flags:  out, return,
base type, */
#ifndef _ALPHA_
/* 40 */  NdrFcShort( 0x30 ), /* ia64 Stack
size/offset = 48 */
#else
                                NdrFcShort( 0x28 ), /*
axp64 Stack size/offset = 40 */
#endif
/* 42 */  0x8,                /* FC_LONG */
                                0x0,                /*
0 */

          /* Procedure Payment */

/* 44 */  0x33,               /* FC_AUTO_HANDLE */
                                0x6c,               /*
Old Flags:  object, Oi2 */
/* 46 */  NdrFcLong( 0x0 ),   /* 0 */
/* 50 */  NdrFcShort( 0x4 ),  /* 4 */
#ifndef _ALPHA_
/* 52 */  NdrFcShort( 0x38 ), /* ia64 Stack
size/offset = 56 */
#else
                                NdrFcShort( 0x30 ), /*
axp64 Stack size/offset = 48 */
#endif
/* 54 */  NdrFcShort( 0x0 ),  /* 0 */
/* 56 */  NdrFcShort( 0x8 ),  /* 8 */
/* 58 */  0x47,               /* Oi2 Flags:  srv must
size, clt must size, has return, has ext, */
                                0x3,                /*
3 */
/* 60 */  0xa,                /* 10 */
                                0x7,                /*
Ext Flags:  new corr desc, clt corr check, srv corr
check, */
/* 62 */  NdrFcShort( 0x20 ), /* 32 */
/* 64 */  NdrFcShort( 0x20 ), /* 32 */
```


©2005 Hewlett-Packard Company. All rights reserved.

```
/* 66 */  NdrFcShort( 0x0 ),  /* 0 */
/* 68 */  NdrFcShort( 0x0 ),  /* 0 */

          /* Parameter txn_in */

/* 70 */  NdrFcShort( 0x8b ), /* Flags:  must size,
must free, in, by val, */
#ifndef _ALPHA_
/* 72 */  NdrFcShort( 0x10 ), /* ia64 Stack
size/offset = 16 */
#else
                              NdrFcShort( 0x8 ),  /*
axp64 Stack size/offset = 8 */
#endif
/* 74 */  NdrFcShort( 0x3b6 ),          /* Type
Offset=950 */

          /* Parameter txn_out */

/* 76 */  NdrFcShort( 0x6113 ),         /* Flags:
must size, must free, out, simple ref, srv alloc
size=24 */
#ifndef _ALPHA_
/* 78 */  NdrFcShort( 0x28 ), /* ia64 Stack
size/offset = 40 */
#else
                              NdrFcShort( 0x20 ), /*
axp64 Stack size/offset = 32 */
#endif
/* 80 */  NdrFcShort( 0x3c8 ),          /* Type
Offset=968 */

          /* Return value */

/* 82 */  NdrFcShort( 0x70 ), /* Flags:  out, return,
base type, */
#ifndef _ALPHA_
/* 84 */  NdrFcShort( 0x30 ), /* ia64 Stack
size/offset = 48 */
#else
                              NdrFcShort( 0x28 ), /*
axp64 Stack size/offset = 40 */
#endif
/* 86 */  0x8,                /* FC_LONG */
                              0x0,                /*
0 */

          /* Procedure Delivery */

/* 88 */  0x33,               /* FC_AUTO_HANDLE */
                              0x6c,               /*
Old Flags:  object, Oi2 */
/* 90 */  NdrFcLong( 0x0 ),   /* 0 */
/* 94 */  NdrFcShort( 0x5 ),  /* 5 */
#ifndef _ALPHA_
/* 96 */  NdrFcShort( 0x38 ), /* ia64 Stack
size/offset = 56 */
#else
                              NdrFcShort( 0x30 ), /*
axp64 Stack size/offset = 48 */
#endif
/* 98 */  NdrFcShort( 0x0 ),  /* 0 */
/* 100 */ NdrFcShort( 0x8 ),  /* 8 */
/* 102 */ 0x47,               /* Oi2 Flags:  srv must
size, clt must size, has return, has ext, */
                              0x3,                /*
3 */
/* 104 */ 0xa,                /* 10 */
                              0x7,                /*
Ext Flags:  new corr desc, clt corr check, srv corr
check, */
/* 106 */ NdrFcShort( 0x20 ), /* 32 */
/* 108 */ NdrFcShort( 0x20 ), /* 32 */
/* 110 */ NdrFcShort( 0x0 ),  /* 0 */
/* 112 */ NdrFcShort( 0x0 ),  /* 0 */

          /* Parameter txn_in */

/* 114 */ NdrFcShort( 0x8b ), /* Flags:  must size,
must free, in, by val, */
#ifndef _ALPHA_
/* 116 */ NdrFcShort( 0x10 ), /* ia64 Stack
size/offset = 16 */
#else
                              NdrFcShort( 0x8 ),  /*
axp64 Stack size/offset = 8 */
#endif
/* 118 */ NdrFcShort( 0x3b6 ),          /* Type
Offset=950 */

          /* Parameter txn_out */

/* 120 */ NdrFcShort( 0x6113 ),         /* Flags:
must size, must free, out, simple ref, srv alloc
size=24 */
#ifndef _ALPHA_
/* 122 */ NdrFcShort( 0x28 ), /* ia64 Stack
size/offset = 40 */
#else
                              NdrFcShort( 0x20 ), /*
axp64 Stack size/offset = 32 */
#endif
/* 124 */ NdrFcShort( 0x3c8 ),          /* Type
Offset=968 */

          /* Return value */

/* 126 */ NdrFcShort( 0x70 ), /* Flags:  out, return,
base type, */
#ifndef _ALPHA_
/* 128 */ NdrFcShort( 0x30 ), /* ia64 Stack
size/offset = 48 */
#else
                              NdrFcShort( 0x28 ), /*
axp64 Stack size/offset = 40 */
#endif
/* 130 */ 0x8,                /* FC_LONG */
                              0x0,                /*
0 */

          /* Procedure StockLevel */

/* 132 */ 0x33,               /* FC_AUTO_HANDLE */
                              0x6c,               /*
Old Flags:  object, Oi2 */
/* 134 */ NdrFcLong( 0x0 ),   /* 0 */
/* 138 */ NdrFcShort( 0x6 ),  /* 6 */
#ifndef _ALPHA_
/* 140 */ NdrFcShort( 0x38 ), /* ia64 Stack
size/offset = 56 */
#else
                              NdrFcShort( 0x30 ), /*
axp64 Stack size/offset = 48 */
#endif
/* 142 */ NdrFcShort( 0x0 ),  /* 0 */
/* 144 */ NdrFcShort( 0x8 ),  /* 8 */
/* 146 */ 0x47,               /* Oi2 Flags:  srv must
size, clt must size, has return, has ext, */
                              0x3,                /*
3 */
/* 148 */ 0xa,                /* 10 */
                              0x7,                /*
Ext Flags:  new corr desc, clt corr check, srv corr
check, */
/* 150 */ NdrFcShort( 0x20 ), /* 32 */
/* 152 */ NdrFcShort( 0x20 ), /* 32 */
/* 154 */ NdrFcShort( 0x0 ),  /* 0 */
/* 156 */ NdrFcShort( 0x0 ),  /* 0 */

          /* Parameter txn_in */

/* 158 */ NdrFcShort( 0x8b ), /* Flags:  must size,
must free, in, by val, */
#ifndef _ALPHA_
/* 160 */ NdrFcShort( 0x10 ), /* ia64 Stack
size/offset = 16 */
#else
                              NdrFcShort( 0x8 ),  /*
axp64 Stack size/offset = 8 */
#endif
/* 162 */ NdrFcShort( 0x3b6 ),          /* Type
Offset=950 */

          /* Parameter txn_out */

/* 164 */ NdrFcShort( 0x6113 ),         /* Flags:
must size, must free, out, simple ref, srv alloc
size=24 */
#ifndef _ALPHA_
/* 166 */ NdrFcShort( 0x28 ), /* ia64 Stack
size/offset = 40 */
#else
                              NdrFcShort( 0x20 ), /*
axp64 Stack size/offset = 32 */
#endif
/* 168 */ NdrFcShort( 0x3c8 ),          /* Type
Offset=968 */

          /* Return value */

/* 170 */ NdrFcShort( 0x70 ), /* Flags:  out, return,
base type, */
#ifndef _ALPHA_
/* 172 */ NdrFcShort( 0x30 ), /* ia64 Stack
size/offset = 48 */
#else
                              NdrFcShort( 0x28 ), /*
axp64 Stack size/offset = 40 */
#endif
```


©2005 Hewlett-Packard Company. All rights reserved.

```
/* 174 */ 0x8,                /* FC_LONG */
                              0x0,                /*
0 */

          /* Procedure OrderStatus */

/* 176 */ 0x33,               /* FC_AUTO_HANDLE */
                              0x6c,               /*
Old Flags:  object, Oi2 */
/* 178 */ NdrFcLong( 0x0 ),   /* 0 */
/* 182 */ NdrFcShort( 0x7 ),  /* 7 */
#ifndef _ALPHA_
/* 184 */ NdrFcShort( 0x38 ), /* ia64 Stack
size/offset = 56 */
#else
                              NdrFcShort( 0x30 ), /*
axp64 Stack size/offset = 48 */
#endif
/* 186 */ NdrFcShort( 0x0 ),  /* 0 */
/* 188 */ NdrFcShort( 0x8 ),  /* 8 */
/* 190 */ 0x47,               /* Oi2 Flags:  srv must
size, clt must size, has return, has ext, */
                              0x3,                /*
3 */
/* 192 */ 0xa,                /* 10 */
                              0x7,                /*
Ext Flags:  new corr desc, clt corr check, srv corr
check, */
/* 194 */ NdrFcShort( 0x20 ), /* 32 */
/* 196 */ NdrFcShort( 0x20 ), /* 32 */
/* 198 */ NdrFcShort( 0x0 ),  /* 0 */
/* 200 */ NdrFcShort( 0x0 ),  /* 0 */

          /* Parameter txn_in */

/* 202 */ NdrFcShort( 0x8b ), /* Flags:  must size,
must free, in, by val, */
#ifndef _ALPHA_
/* 204 */ NdrFcShort( 0x10 ), /* ia64 Stack
size/offset = 16 */
#else
                              NdrFcShort( 0x8 ),  /*
axp64 Stack size/offset = 8 */
#endif
/* 206 */ NdrFcShort( 0x3b6 ),          /* Type
Offset=950 */

          /* Parameter txn_out */

/* 208 */ NdrFcShort( 0x6113 ),         /* Flags:
must size, must free, out, simple ref, srv alloc
size=24 */
#ifndef _ALPHA_
/* 210 */ NdrFcShort( 0x28 ), /* ia64 Stack
size/offset = 40 */
#else
                              NdrFcShort( 0x20 ), /*
axp64 Stack size/offset = 32 */
#endif
/* 212 */ NdrFcShort( 0x3c8 ),          /* Type
Offset=968 */

          /* Return value */

/* 214 */ NdrFcShort( 0x70 ), /* Flags:  out, return,
base type, */
#ifndef _ALPHA_
/* 216 */ NdrFcShort( 0x30 ), /* ia64 Stack
size/offset = 48 */
#else
                              NdrFcShort( 0x28 ), /*
axp64 Stack size/offset = 40 */
#endif
/* 218 */ 0x8,                /* FC_LONG */
                              0x0,                /*
0 */

          /* Procedure CallSetComplete */

/* 220 */ 0x33,               /* FC_AUTO_HANDLE */
                              0x6c,               /*
Old Flags:  object, Oi2 */
/* 222 */ NdrFcLong( 0x0 ),   /* 0 */
/* 226 */ NdrFcShort( 0x8 ),  /* 8 */
/* 228 */ NdrFcShort( 0x10 ), /* ia64, axp64 Stack
size/offset = 16 */
/* 230 */ NdrFcShort( 0x0 ),  /* 0 */
/* 232 */ NdrFcShort( 0x8 ),  /* 8 */
/* 234 */ 0x44,               /* Oi2 Flags:  has
return, has ext, */
                              0x1,                /*
1 */
/* 236 */ 0xa,                /* 10 */
                              0x1,                /*
Ext Flags:  new corr desc, */
/* 238 */ NdrFcShort( 0x0 ),  /* 0 */
/* 240 */ NdrFcShort( 0x0 ),  /* 0 */
/* 242 */ NdrFcShort( 0x0 ),  /* 0 */
/* 244 */ NdrFcShort( 0x0 ),  /* 0 */

          /* Return value */

/* 246 */ NdrFcShort( 0x70 ), /* Flags:  out, return,
base type, */
/* 248 */ NdrFcShort( 0x8 ),  /* ia64, axp64 Stack
size/offset = 8 */
/* 250 */ 0x8,                /* FC_LONG */
                              0x0,                /*
0 */

                              0x0
        }
    };

static const MIDL_TYPE_FORMAT_STRING
__MIDL_TypeFormatString =
    {
        0,
        {
                              NdrFcShort( 0x0 ),  /*
0 */
/*  2 */
                              0x12, 0x0,          /*
FC_UP */
/*  4 */  NdrFcShort( 0x39e ),          /* Offset=
926 (930) */
/*  6 */
                              0x2b,               /*
FC_NON_ENCAPSULATED_UNION */
                              0x9,                /*
FC_ULONG */
/*  8 */  0x7,                /* Corr desc: FC_USHORT
*/
                              0x0,                /*
*/
/* 10 */  NdrFcShort( 0xfff8 ),         /* -8 */
/* 12 */  NdrFcShort( 0x1 ),  /* Corr flags:  early,
*/
/* 14 */  NdrFcShort( 0x2 ),  /* Offset= 2 (16) */
/* 16 */  NdrFcShort( 0x10 ), /* 16 */
/* 18 */  NdrFcShort( 0x2b ), /* 43 */
/* 20 */  NdrFcLong( 0x3 ),   /* 3 */
/* 24 */  NdrFcShort( 0x8008 ),         /* Simple arm
type: FC_LONG */
/* 26 */  NdrFcLong( 0x11 ),  /* 17 */
/* 30 */  NdrFcShort( 0x8001 ),         /* Simple arm
type: FC_BYTE */
/* 32 */  NdrFcLong( 0x2 ),   /* 2 */
/* 36 */  NdrFcShort( 0x8006 ),         /* Simple arm
type: FC_SHORT */
/* 38 */  NdrFcLong( 0x4 ),   /* 4 */
/* 42 */  NdrFcShort( 0x800a ),         /* Simple arm
type: FC_FLOAT */
/* 44 */  NdrFcLong( 0x5 ),   /* 5 */
/* 48 */  NdrFcShort( 0x800c ),         /* Simple arm
type: FC_DOUBLE */
/* 50 */  NdrFcLong( 0xb ),   /* 11 */
/* 54 */  NdrFcShort( 0x8006 ),         /* Simple arm
type: FC_SHORT */
/* 56 */  NdrFcLong( 0xa ),   /* 10 */
/* 60 */  NdrFcShort( 0x8008 ),         /* Simple arm
type: FC_LONG */
/* 62 */  NdrFcLong( 0x6 ),   /* 6 */
/* 66 */  NdrFcShort( 0xd6 ), /* Offset= 214 (280) */
/* 68 */  NdrFcLong( 0x7 ),   /* 7 */
/* 72 */  NdrFcShort( 0x800c ),         /* Simple arm
type: FC_DOUBLE */
/* 74 */  NdrFcLong( 0x8 ),   /* 8 */
/* 78 */  NdrFcShort( 0xd0 ), /* Offset= 208 (286) */
/* 80 */  NdrFcLong( 0xd ),   /* 13 */
/* 84 */  NdrFcShort( 0xe4 ), /* Offset= 228 (312) */
/* 86 */  NdrFcLong( 0x9 ),   /* 9 */
/* 90 */  NdrFcShort( 0xf0 ), /* Offset= 240 (330) */
/* 92 */  NdrFcLong( 0x2000 ),          /* 8192 */
/* 96 */  NdrFcShort( 0xfc ), /* Offset= 252 (348) */
/* 98 */  NdrFcLong( 0x24 ),  /* 36 */
/* 102 */ NdrFcShort( 0x2f4 ),          /* Offset=
756 (858) */
/* 104 */ NdrFcLong( 0x4024 ),          /* 16420 */
/* 108 */ NdrFcShort( 0x2ee ),          /* Offset=
750 (858) */
/* 110 */ NdrFcLong( 0x4011 ),          /* 16401 */
/* 114 */ NdrFcShort( 0x2ec ),          /* Offset=
748 (862) */
/* 116 */ NdrFcLong( 0x4002 ),          /* 16386 */
/* 120 */ NdrFcShort( 0x2ea ),          /* Offset=
746 (866) */
/* 122 */ NdrFcLong( 0x4003 ),          /* 16387 */
```


©2005 Hewlett-Packard Company. All rights reserved.

```
/* 126 */ NdrFcShort( 0x2e8 ),          /* Offset=
744 (870) */
/* 128 */ NdrFcLong( 0x4004 ),          /* 16388 */
/* 132 */ NdrFcShort( 0x2e6 ),          /* Offset=
742 (874) */
/* 134 */ NdrFcLong( 0x4005 ),          /* 16389 */
/* 138 */ NdrFcShort( 0x2e4 ),          /* Offset=
740 (878) */
/* 140 */ NdrFcLong( 0x400b ),          /* 16395 */
/* 144 */ NdrFcShort( 0x2d2 ),          /* Offset=
722 (866) */
/* 146 */ NdrFcLong( 0x400a ),          /* 16394 */
/* 150 */ NdrFcShort( 0x2d0 ),          /* Offset=
720 (870) */
/* 152 */ NdrFcLong( 0x4006 ),          /* 16390 */
/* 156 */ NdrFcShort( 0x2d6 ),          /* Offset=
726 (882) */
/* 158 */ NdrFcLong( 0x4007 ),          /* 16391 */
/* 162 */ NdrFcShort( 0x2cc ),          /* Offset=
716 (878) */
/* 164 */ NdrFcLong( 0x4008 ),          /* 16392 */
/* 168 */ NdrFcShort( 0x2ce ),          /* Offset=
718 (886) */
/* 170 */ NdrFcLong( 0x400d ),          /* 16397 */
/* 174 */ NdrFcShort( 0x2cc ),          /* Offset=
716 (890) */
/* 176 */ NdrFcLong( 0x4009 ),          /* 16393 */
/* 180 */ NdrFcShort( 0x2ca ),          /* Offset=
714 (894) */
/* 182 */ NdrFcLong( 0x6000 ),          /* 24576 */
/* 186 */ NdrFcShort( 0x2c8 ),          /* Offset=
712 (898) */
/* 188 */ NdrFcLong( 0x400c ),          /* 16396 */
/* 192 */ NdrFcShort( 0x2c6 ),          /* Offset=
710 (902) */
/* 194 */ NdrFcLong( 0x10 ),  /* 16 */
/* 198 */ NdrFcShort( 0x8002 ),         /* Simple arm
type: FC_CHAR */
/* 200 */ NdrFcLong( 0x12 ),  /* 18 */
/* 204 */ NdrFcShort( 0x8006 ),         /* Simple arm
type: FC_SHORT */
/* 206 */ NdrFcLong( 0x13 ),  /* 19 */
/* 210 */ NdrFcShort( 0x8008 ),         /* Simple arm
type: FC_LONG */
/* 212 */ NdrFcLong( 0x16 ),  /* 22 */
/* 216 */ NdrFcShort( 0x8008 ),         /* Simple arm
type: FC_LONG */
/* 218 */ NdrFcLong( 0x17 ),  /* 23 */
/* 222 */ NdrFcShort( 0x8008 ),         /* Simple arm
type: FC_LONG */
/* 224 */ NdrFcLong( 0xe ),   /* 14 */
/* 228 */ NdrFcShort( 0x2aa ),          /* Offset=
682 (910) */
/* 230 */ NdrFcLong( 0x400e ),          /* 16398 */
/* 234 */ NdrFcShort( 0x2b0 ),          /* Offset=
688 (922) */
/* 236 */ NdrFcLong( 0x4010 ),          /* 16400 */
/* 240 */ NdrFcShort( 0x2ae ),          /* Offset=
686 (926) */
/* 242 */ NdrFcLong( 0x4012 ),          /* 16402 */
/* 246 */ NdrFcShort( 0x26c ),          /* Offset=
620 (866) */
/* 248 */ NdrFcLong( 0x4013 ),          /* 16403 */
/* 252 */ NdrFcShort( 0x26a ),          /* Offset=
618 (870) */
/* 254 */ NdrFcLong( 0x4016 ),          /* 16406 */
/* 258 */ NdrFcShort( 0x264 ),          /* Offset=
612 (870) */
/* 260 */ NdrFcLong( 0x4017 ),          /* 16407 */
/* 264 */ NdrFcShort( 0x25e ),          /* Offset=
606 (870) */
/* 266 */ NdrFcLong( 0x0 ),   /* 0 */
/* 270 */ NdrFcShort( 0x0 ),  /* Offset= 0 (270) */
/* 272 */ NdrFcLong( 0x1 ),   /* 1 */
/* 276 */ NdrFcShort( 0x0 ),  /* Offset= 0 (276) */
/* 278 */ NdrFcShort( 0xffffffff ),     /* Offset= -1
(277) */
/* 280 */
                                0x15,               /*
FC_STRUCT */
                                0x7,                /*
7 */
/* 282 */ NdrFcShort( 0x8 ),  /* 8 */
/* 284 */ 0xb,                 /* FC_HYPER */
                                0x5b,               /*
FC_END */
/* 286 */
                                0x12, 0x0,          /*
FC_UP */
/* 288 */ NdrFcShort( 0xe ),  /* Offset= 14 (302) */
/* 290 */
                                0x1b,               /*
FC_CARRAY */
                                0x1,                /*
1 */
/* 292 */ NdrFcShort( 0x2 ),  /* 2 */
/* 294 */ 0x9,                 /* Corr desc: FC_ULONG
*/
                                0x0,                /*
*/
/* 296 */ NdrFcShort( 0xfffc ),         /* -4 */
/* 298 */ NdrFcShort( 0x1 ),  /* Corr flags:  early,
*/
/* 300 */ 0x6,                 /* FC_SHORT */
                                0x5b,               /*
FC_END */
/* 302 */
                                0x17,               /*
FC_CSTRUCT */
                                0x3,                /*
3 */
/* 304 */ NdrFcShort( 0x8 ),  /* 8 */
/* 306 */ NdrFcShort( 0xfffffff0 ),     /* Offset= -
16 (290) */
/* 308 */ 0x8,                 /* FC_LONG */
                                0x8,                /*
FC_LONG */
/* 310 */ 0x5c,                /* FC_PAD */
                                0x5b,               /*
FC_END */
/* 312 */
                                0x2f,               /*
FC_IP */
                                0x5a,               /*
FC_CONSTANT_IID */
/* 314 */ NdrFcLong( 0x0 ),   /* 0 */
/* 318 */ NdrFcShort( 0x0 ),  /* 0 */
/* 320 */ NdrFcShort( 0x0 ),  /* 0 */
/* 322 */ 0xc0,                /* 192 */
                                0x0,                /*
0 */
/* 324 */ 0x0,                 /* 0 */
                                0x0,                /*
0 */
/* 326 */ 0x0,                 /* 0 */
                                0x0,                /*
0 */
/* 328 */ 0x0,                 /* 0 */
                                0x46,               /*
70 */
/* 330 */
                                0x2f,               /*
FC_IP */
                                0x5a,               /*
FC_CONSTANT_IID */
/* 332 */ NdrFcLong( 0x20400 ),         /* 132096 */
/* 336 */ NdrFcShort( 0x0 ),  /* 0 */
/* 338 */ NdrFcShort( 0x0 ),  /* 0 */
/* 340 */ 0xc0,                /* 192 */
                                0x0,                /*
0 */
/* 342 */ 0x0,                 /* 0 */
                                0x0,                /*
0 */
/* 344 */ 0x0,                 /* 0 */
                                0x0,                /*
0 */
/* 346 */ 0x0,                 /* 0 */
                                0x46,               /*
70 */
/* 348 */
                                0x12, 0x10,         /*
FC_UP [pointer_deref] */
/* 350 */ NdrFcShort( 0x2 ),  /* Offset= 2 (352) */
/* 352 */
                                0x12, 0x0,          /*
FC_UP */
/* 354 */ NdrFcShort( 0x1e6 ),          /* Offset=
486 (840) */
/* 356 */
                                0x2a,               /*
FC_ENCAPSULATED_UNION */
                                0x89,               /*
137 */
/* 358 */ NdrFcShort( 0x20 ), /* 32 */
/* 360 */ NdrFcShort( 0xa ),  /* 10 */
/* 362 */ NdrFcLong( 0x8 ),   /* 8 */
/* 366 */ NdrFcShort( 0x50 ), /* Offset= 80 (446) */
/* 368 */ NdrFcLong( 0xd ),   /* 13 */
/* 372 */ NdrFcShort( 0x70 ), /* Offset= 112 (484) */
/* 374 */ NdrFcLong( 0x9 ),   /* 9 */
/* 378 */ NdrFcShort( 0x90 ), /* Offset= 144 (522) */
/* 380 */ NdrFcLong( 0xc ),   /* 12 */
/* 384 */ NdrFcShort( 0xb0 ), /* Offset= 176 (560) */
/* 386 */ NdrFcLong( 0x24 ),  /* 36 */
/* 390 */ NdrFcShort( 0x104 ),          /* Offset=
260 (650) */
/* 392 */ NdrFcLong( 0x800d ),          /* 32781 */
```


©2005 Hewlett-Packard Company. All rights reserved.

```
/* 396 */ NdrFcShort( 0x120 ),          /* Offset=
288 (684) */
/* 398 */ NdrFcLong( 0x10 ),  /* 16 */
/* 402 */ NdrFcShort( 0x13a ),          /* Offset=
314 (716) */
/* 404 */ NdrFcLong( 0x2 ),   /* 2 */
/* 408 */ NdrFcShort( 0x150 ),          /* Offset=
336 (744) */
/* 410 */ NdrFcLong( 0x3 ),   /* 3 */
/* 414 */ NdrFcShort( 0x166 ),          /* Offset=
358 (772) */
/* 416 */ NdrFcLong( 0x14 ),  /* 20 */
/* 420 */ NdrFcShort( 0x17c ),          /* Offset=
380 (800) */
/* 422 */ NdrFcShort( 0xffffffff ),     /* Offset= -1
(421) */
/* 424 */
                                0x21,               /*
FC_BOGUS_ARRAY */
                                0x3,                /*
3 */
/* 426 */ NdrFcShort( 0x0 ),  /* 0 */
/* 428 */ 0x19,                /* Corr desc:  field
pointer, FC_ULONG */
                                0x0,                /*
*/
/* 430 */ NdrFcShort( 0x0 ),  /* 0 */
/* 432 */ NdrFcShort( 0x1 ),  /* Corr flags:  early,
*/
/* 434 */ NdrFcLong( 0xffffffff ),      /* -1 */
/* 438 */ NdrFcShort( 0x0 ),  /* Corr flags:  */
/* 440 */
                                0x12, 0x0,          /*
FC_UP */
/* 442 */ NdrFcShort( 0xffffff74 ),     /* Offset= -
140 (302) */
/* 444 */ 0x5c,                /* FC_PAD */
                                0x5b,               /*
FC_END */
/* 446 */
                                0x1a,               /*
FC_BOGUS_STRUCT */
                                0x3,                /*
3 */
/* 448 */ NdrFcShort( 0x10 ), /* 16 */
/* 450 */ NdrFcShort( 0x0 ),  /* 0 */
/* 452 */ NdrFcShort( 0x6 ),  /* Offset= 6 (458) */
/* 454 */ 0x8,                 /* FC_LONG */
                                0x39,               /*
FC_ALIGNM8 */
/* 456 */ 0x36,                /* FC_POINTER */
                                0x5b,               /*
FC_END */
/* 458 */
                                0x11, 0x0,          /*
FC_RP */
/* 460 */ NdrFcShort( 0xffffffdc ),     /* Offset= -
36 (424) */
/* 462 */
                                0x21,               /*
FC_BOGUS_ARRAY */
                                0x3,                /*
3 */
/* 464 */ NdrFcShort( 0x0 ),  /* 0 */
/* 466 */ 0x19,                /* Corr desc:  field
pointer, FC_ULONG */
                                0x0,                /*
*/
/* 468 */ NdrFcShort( 0x0 ),  /* 0 */
/* 470 */ NdrFcShort( 0x1 ),  /* Corr flags:  early,
*/
/* 472 */ NdrFcLong( 0xffffffff ),      /* -1 */
/* 476 */ NdrFcShort( 0x0 ),  /* Corr flags:  */
/* 478 */ 0x4c,                /* FC_EMBEDDED_COMPLEX
*/
                                0x0,                /*
0 */
/* 480 */ NdrFcShort( 0xffffff58 ),     /* Offset= -
168 (312) */
/* 482 */ 0x5c,                /* FC_PAD */
                                0x5b,               /*
FC_END */
/* 484 */
                                0x1a,               /*
FC_BOGUS_STRUCT */
                                0x3,                /*
3 */
/* 486 */ NdrFcShort( 0x10 ), /* 16 */
/* 488 */ NdrFcShort( 0x0 ),  /* 0 */
/* 490 */ NdrFcShort( 0x6 ),  /* Offset= 6 (496) */
/* 492 */ 0x8,                 /* FC_LONG */
                                0x39,               /*
FC_ALIGNM8 */
/* 494 */ 0x36,                /* FC_POINTER */
                                0x5b,               /*
FC_END */
/* 496 */
                                0x11, 0x0,          /*
FC_RP */
/* 498 */ NdrFcShort( 0xffffffdc ),     /* Offset= -
36 (462) */
/* 500 */
                                0x21,               /*
FC_BOGUS_ARRAY */
                                0x3,                /*
3 */
/* 502 */ NdrFcShort( 0x0 ),  /* 0 */
/* 504 */ 0x19,                /* Corr desc:  field
pointer, FC_ULONG */
                                0x0,                /*
*/
/* 506 */ NdrFcShort( 0x0 ),  /* 0 */
/* 508 */ NdrFcShort( 0x1 ),  /* Corr flags:  early,
*/
/* 510 */ NdrFcLong( 0xffffffff ),      /* -1 */
/* 514 */ NdrFcShort( 0x0 ),  /* Corr flags:  */
/* 516 */ 0x4c,                /* FC_EMBEDDED_COMPLEX
*/
                                0x0,                /*
0 */
/* 518 */ NdrFcShort( 0xffffff44 ),     /* Offset= -
188 (330) */
/* 520 */ 0x5c,                /* FC_PAD */
                                0x5b,               /*
FC_END */
/* 522 */
                                0x1a,               /*
FC_BOGUS_STRUCT */
                                0x3,                /*
3 */
/* 524 */ NdrFcShort( 0x10 ), /* 16 */
/* 526 */ NdrFcShort( 0x0 ),  /* 0 */
/* 528 */ NdrFcShort( 0x6 ),  /* Offset= 6 (534) */
/* 530 */ 0x8,                 /* FC_LONG */
                                0x39,               /*
FC_ALIGNM8 */
/* 532 */ 0x36,                /* FC_POINTER */
                                0x5b,               /*
FC_END */
/* 534 */
                                0x11, 0x0,          /*
FC_RP */
/* 536 */ NdrFcShort( 0xffffffdc ),     /* Offset= -
36 (500) */
/* 538 */
                                0x21,               /*
FC_BOGUS_ARRAY */
                                0x3,                /*
3 */
/* 540 */ NdrFcShort( 0x0 ),  /* 0 */
/* 542 */ 0x19,                /* Corr desc:  field
pointer, FC_ULONG */
                                0x0,                /*
*/
/* 544 */ NdrFcShort( 0x0 ),  /* 0 */
/* 546 */ NdrFcShort( 0x1 ),  /* Corr flags:  early,
*/
/* 548 */ NdrFcLong( 0xffffffff ),      /* -1 */
/* 552 */ NdrFcShort( 0x0 ),  /* Corr flags:  */
/* 554 */
                                0x12, 0x0,          /*
FC_UP */
/* 556 */ NdrFcShort( 0x176 ),          /* Offset=
374 (930) */
/* 558 */ 0x5c,                /* FC_PAD */
                                0x5b,               /*
FC_END */
/* 560 */
                                0x1a,               /*
FC_BOGUS_STRUCT */
                                0x3,                /*
3 */
/* 562 */ NdrFcShort( 0x10 ), /* 16 */
/* 564 */ NdrFcShort( 0x0 ),  /* 0 */
/* 566 */ NdrFcShort( 0x6 ),  /* Offset= 6 (572) */
/* 568 */ 0x8,                 /* FC_LONG */
                                0x39,               /*
FC_ALIGNM8 */
/* 570 */ 0x36,                /* FC_POINTER */
                                0x5b,               /*
FC_END */
/* 572 */
                                0x11, 0x0,          /*
FC_RP */
/* 574 */ NdrFcShort( 0xffffffdc ),     /* Offset= -
36 (538) */
/* 576 */
                                0x2f,               /*
FC_IP */
```


©2005 Hewlett-Packard Company. All rights reserved.

```
                                0x5a,               /*
FC_CONSTANT_IID */
/* 578 */ NdrFcLong( 0x2f ),  /* 47 */
/* 582 */ NdrFcShort( 0x0 ),  /* 0 */
/* 584 */ NdrFcShort( 0x0 ),  /* 0 */
/* 586 */ 0xc0,               /* 192 */
                                0x0,                /*
0 */
/* 588 */ 0x0,                /* 0 */
                                0x0,                /*
0 */
/* 590 */ 0x0,                /* 0 */
                                0x0,                /*
0 */
/* 592 */ 0x0,                /* 0 */
                                0x46,               /*
70 */
/* 594 */
                                0x1b,               /*
FC_CARRAY */
                                0x0,                /*
0 */
/* 596 */ NdrFcShort( 0x1 ),  /* 1 */
/* 598 */ 0x19,               /* Corr desc:  field
pointer, FC_ULONG */
                                0x0,                /*
*/
/* 600 */ NdrFcShort( 0x4 ),  /* 4 */
/* 602 */ NdrFcShort( 0x1 ),  /* Corr flags:  early,
*/
/* 604 */ 0x1,                /* FC_BYTE */
                                0x5b,               /*
FC_END */
/* 606 */
                                0x1a,               /*
FC_BOGUS_STRUCT */
                                0x3,                /*
3 */
/* 608 */ NdrFcShort( 0x18 ), /* 24 */
/* 610 */ NdrFcShort( 0x0 ),  /* 0 */
/* 612 */ NdrFcShort( 0xc ),  /* Offset= 12 (624) */
/* 614 */ 0x8,                /* FC_LONG */
                                0x8,                /*
FC_LONG */
/* 616 */ 0x4c,               /* FC_EMBEDDED_COMPLEX
*/
                                0x0,                /*
0 */
/* 618 */ NdrFcShort( 0xffffffd6 ),     /* Offset= -
42 (576) */
/* 620 */ 0x39,               /* FC_ALIGNM8 */
                                0x36,               /*
FC_POINTER */
/* 622 */ 0x5c,               /* FC_PAD */
                                0x5b,               /*
FC_END */
/* 624 */
                                0x12, 0x0,          /*
FC_UP */
/* 626 */ NdrFcShort( 0xffffffe0 ),     /* Offset= -
32 (594) */
/* 628 */
                                0x21,               /*
FC_BOGUS_ARRAY */
                                0x3,                /*
3 */
/* 630 */ NdrFcShort( 0x0 ),  /* 0 */
/* 632 */ 0x19,               /* Corr desc:  field
pointer, FC_ULONG */
                                0x0,                /*
*/
/* 634 */ NdrFcShort( 0x0 ),  /* 0 */
/* 636 */ NdrFcShort( 0x1 ),  /* Corr flags:  early,
*/
/* 638 */ NdrFcLong( 0xffffffff ),      /* -1 */
/* 642 */ NdrFcShort( 0x0 ),  /* Corr flags:  */
/* 644 */
                                0x12, 0x0,          /*
FC_UP */
/* 646 */ NdrFcShort( 0xffffffd8 ),     /* Offset= -
40 (606) */
/* 648 */ 0x5c,               /* FC_PAD */
                                0x5b,               /*
FC_END */
/* 650 */
                                0x1a,               /*
FC_BOGUS_STRUCT */
                                0x3,                /*
3 */
/* 652 */ NdrFcShort( 0x10 ), /* 16 */
/* 654 */ NdrFcShort( 0x0 ),  /* 0 */
/* 656 */ NdrFcShort( 0x6 ),  /* Offset= 6 (662) */
/* 658 */ 0x8,                /* FC_LONG */
                                0x39,               /*
FC_ALIGNM8 */
/* 660 */ 0x36,               /* FC_POINTER */
                                0x5b,               /*
FC_END */
/* 662 */
                                0x11, 0x0,          /*
FC_RP */
/* 664 */ NdrFcShort( 0xffffffdc ),     /* Offset= -
36 (628) */
/* 666 */
                                0x1d,               /*
FC_SMFARRAY */
                                0x0,                /*
0 */
/* 668 */ NdrFcShort( 0x8 ),  /* 8 */
/* 670 */ 0x1,                /* FC_BYTE */
                                0x5b,               /*
FC_END */
/* 672 */
                                0x15,               /*
FC_STRUCT */
                                0x3,                /*
3 */
/* 674 */ NdrFcShort( 0x10 ), /* 16 */
/* 676 */ 0x8,                /* FC_LONG */
                                0x6,                /*
FC_SHORT */
/* 678 */ 0x6,                /* FC_SHORT */
                                0x4c,               /*
FC_EMBEDDED_COMPLEX */
/* 680 */ 0x0,                /* 0 */
                                NdrFcShort( 0xfffffff1
),        /* Offset= -15 (666) */
                                0x5b,               /*
FC_END */
/* 684 */
                                0x1a,               /*
FC_BOGUS_STRUCT */
                                0x3,                /*
3 */
/* 686 */ NdrFcShort( 0x20 ), /* 32 */
/* 688 */ NdrFcShort( 0x0 ),  /* 0 */
/* 690 */ NdrFcShort( 0xa ),  /* Offset= 10 (700) */
/* 692 */ 0x8,                /* FC_LONG */
                                0x39,               /*
FC_ALIGNM8 */
/* 694 */ 0x36,               /* FC_POINTER */
                                0x4c,               /*
FC_EMBEDDED_COMPLEX */
/* 696 */ 0x0,                /* 0 */
                                NdrFcShort( 0xffffffe7
),        /* Offset= -25 (672) */
                                0x5b,               /*
FC_END */
/* 700 */
                                0x11, 0x0,          /*
FC_RP */
/* 702 */ NdrFcShort( 0xffffff10 ),     /* Offset= -
240 (462) */
/* 704 */
                                0x1b,               /*
FC_CARRAY */
                                0x0,                /*
0 */
/* 706 */ NdrFcShort( 0x1 ),  /* 1 */
/* 708 */ 0x19,               /* Corr desc:  field
pointer, FC_ULONG */
                                0x0,                /*
*/
/* 710 */ NdrFcShort( 0x0 ),  /* 0 */
/* 712 */ NdrFcShort( 0x1 ),  /* Corr flags:  early,
*/
/* 714 */ 0x1,                /* FC_BYTE */
                                0x5b,               /*
FC_END */
/* 716 */
                                0x1a,               /*
FC_BOGUS_STRUCT */
                                0x3,                /*
3 */
/* 718 */ NdrFcShort( 0x10 ), /* 16 */
/* 720 */ NdrFcShort( 0x0 ),  /* 0 */
/* 722 */ NdrFcShort( 0x6 ),  /* Offset= 6 (728) */
/* 724 */ 0x8,                /* FC_LONG */
                                0x39,               /*
FC_ALIGNM8 */
/* 726 */ 0x36,               /* FC_POINTER */
                                0x5b,               /*
FC_END */
/* 728 */
                                0x12, 0x0,          /*
FC_UP */
/* 730 */ NdrFcShort( 0xffffffe6 ),     /* Offset= -
26 (704) */
```


©2005 Hewlett-Packard Company. All rights reserved.

```
/* 732 */
                                0x1b,               /*
FC_CARRAY */
                                0x1,                /*
1 */
/* 734 */ NdrFcShort( 0x2 ),  /* 2 */
/* 736 */ 0x19,               /* Corr desc:  field
pointer, FC_ULONG */
                                0x0,                /*
*/
/* 738 */ NdrFcShort( 0x0 ),  /* 0 */
/* 740 */ NdrFcShort( 0x1 ),  /* Corr flags:  early,
*/
/* 742 */ 0x6,                /* FC_SHORT */
                                0x5b,               /*
FC_END */
/* 744 */
                                0x1a,               /*
FC_BOGUS_STRUCT */
                                0x3,                /*
3 */
/* 746 */ NdrFcShort( 0x10 ), /* 16 */
/* 748 */ NdrFcShort( 0x0 ),  /* 0 */
/* 750 */ NdrFcShort( 0x6 ),  /* Offset= 6 (756) */
/* 752 */ 0x8,                /* FC_LONG */
                                0x39,               /*
FC_ALIGNM8 */
/* 754 */ 0x36,               /* FC_POINTER */
                                0x5b,               /*
FC_END */
/* 756 */
                                0x12, 0x0,          /*
FC_UP */
/* 758 */ NdrFcShort( 0xffffffe6 ),     /* Offset= -
26 (732) */
/* 760 */
                                0x1b,               /*
FC_CARRAY */
                                0x3,                /*
3 */
/* 762 */ NdrFcShort( 0x4 ),  /* 4 */
/* 764 */ 0x19,               /* Corr desc:  field
pointer, FC_ULONG */
                                0x0,                /*
*/
/* 766 */ NdrFcShort( 0x0 ),  /* 0 */
/* 768 */ NdrFcShort( 0x1 ),  /* Corr flags:  early,
*/
/* 770 */ 0x8,                /* FC_LONG */
                                0x5b,               /*
FC_END */
/* 772 */
                                0x1a,               /*
FC_BOGUS_STRUCT */
                                0x3,                /*
3 */
/* 774 */ NdrFcShort( 0x10 ), /* 16 */
/* 776 */ NdrFcShort( 0x0 ),  /* 0 */
/* 778 */ NdrFcShort( 0x6 ),  /* Offset= 6 (784) */
/* 780 */ 0x8,                /* FC_LONG */
                                0x39,               /*
FC_ALIGNM8 */
/* 782 */ 0x36,               /* FC_POINTER */
                                0x5b,               /*
FC_END */
/* 784 */
                                0x12, 0x0,          /*
FC_UP */
/* 786 */ NdrFcShort( 0xffffffe6 ),     /* Offset= -
26 (760) */
/* 788 */
                                0x1b,               /*
FC_CARRAY */
                                0x7,                /*
7 */
/* 790 */ NdrFcShort( 0x8 ),  /* 8 */
/* 792 */ 0x19,               /* Corr desc:  field
pointer, FC_ULONG */
                                0x0,                /*
*/
/* 794 */ NdrFcShort( 0x0 ),  /* 0 */
/* 796 */ NdrFcShort( 0x1 ),  /* Corr flags:  early,
*/
/* 798 */ 0xb,                /* FC_HYPER */
                                0x5b,               /*
FC_END */
/* 800 */
                                0x1a,               /*
FC_BOGUS_STRUCT */
                                0x3,                /*
3 */
/* 802 */ NdrFcShort( 0x10 ), /* 16 */
/* 804 */ NdrFcShort( 0x0 ),  /* 0 */
/* 806 */ NdrFcShort( 0x6 ),  /* Offset= 6 (812) */
/* 808 */ 0x8,                /* FC_LONG */
                                0x39,               /*
FC_ALIGNM8 */
/* 810 */ 0x36,               /* FC_POINTER */
                                0x5b,               /*
FC_END */
/* 812 */
                                0x12, 0x0,          /*
FC_UP */
/* 814 */ NdrFcShort( 0xffffffe6 ),     /* Offset= -
26 (788) */
/* 816 */
                                0x15,               /*
FC_STRUCT */
                                0x3,                /*
3 */
/* 818 */ NdrFcShort( 0x8 ),  /* 8 */
/* 820 */ 0x8,                /* FC_LONG */
                                0x8,                /*
FC_LONG */
/* 822 */ 0x5c,               /* FC_PAD */
                                0x5b,               /*
FC_END */
/* 824 */
                                0x1b,               /*
FC_CARRAY */
                                0x3,                /*
3 */
/* 826 */ NdrFcShort( 0x8 ),  /* 8 */
/* 828 */ 0x7,                /* Corr desc: FC_USHORT
*/
                                0x0,                /*
*/
/* 830 */ NdrFcShort( 0xffc8 ),         /* -56 */
/* 832 */ NdrFcShort( 0x1 ),  /* Corr flags:  early,
*/
/* 834 */ 0x4c,               /* FC_EMBEDDED_COMPLEX
*/
                                0x0,                /*
0 */
/* 836 */ NdrFcShort( 0xffffffec ),     /* Offset= -
20 (816) */
/* 838 */ 0x5c,               /* FC_PAD */
                                0x5b,               /*
FC_END */
/* 840 */
                                0x1a,               /*
FC_BOGUS_STRUCT */
                                0x3,                /*
3 */
/* 842 */ NdrFcShort( 0x38 ), /* 56 */
/* 844 */ NdrFcShort( 0xffffffec ),     /* Offset= -
20 (824) */
/* 846 */ NdrFcShort( 0x0 ),  /* Offset= 0 (846) */
/* 848 */ 0x6,                /* FC_SHORT */
                                0x6,                /*
FC_SHORT */
/* 850 */ 0x38,               /* FC_ALIGNM4 */
                                0x8,                /*
FC_LONG */
/* 852 */ 0x8,                /* FC_LONG */
                                0x4c,               /*
FC_EMBEDDED_COMPLEX */
/* 854 */ 0x4,                /* 4 */
                                NdrFcShort( 0xfffffe0d
),        /* Offset= -499 (356) */
                                0x5b,               /*
FC_END */
/* 858 */
                                0x12, 0x0,          /*
FC_UP */
/* 860 */ NdrFcShort( 0xffffff02 ),     /* Offset= -
254 (606) */
/* 862 */
                                0x12, 0x8,          /*
FC_UP [simple_pointer] */
/* 864 */ 0x1,                /* FC_BYTE */
                                0x5c,               /*
FC_PAD */
/* 866 */
                                0x12, 0x8,          /*
FC_UP [simple_pointer] */
/* 868 */ 0x6,                /* FC_SHORT */
                                0x5c,               /*
FC_PAD */
/* 870 */
                                0x12, 0x8,          /*
FC_UP [simple_pointer] */
/* 872 */ 0x8,                /* FC_LONG */
                                0x5c,               /*
FC_PAD */
/* 874 */
                                0x12, 0x8,          /*
FC_UP [simple_pointer] */
```


©2005 Hewlett-Packard Company. All rights reserved.

```
/* 876 */ 0xa,                /* FC_FLOAT */
                              0x5c,               /*
FC_PAD */
/* 878 */
                              0x12, 0x8,          /*
FC_UP [simple_pointer] */
/* 880 */ 0xc,                /* FC_DOUBLE */
                              0x5c,               /*
FC_PAD */
/* 882 */
                              0x12, 0x0,          /*
FC_UP */
/* 884 */ NdrFcShort( 0xfffffda4 ),     /* Offset= -
604 (280) */
/* 886 */
                              0x12, 0x10,         /*
FC_UP [pointer_deref] */
/* 888 */ NdrFcShort( 0xfffffda6 ),     /* Offset= -
602 (286) */
/* 890 */
                              0x12, 0x10,         /*
FC_UP [pointer_deref] */
/* 892 */ NdrFcShort( 0xfffffdbc ),     /* Offset= -
580 (312) */
/* 894 */
                              0x12, 0x10,         /*
FC_UP [pointer_deref] */
/* 896 */ NdrFcShort( 0xfffffdca ),     /* Offset= -
566 (330) */
/* 898 */
                              0x12, 0x10,         /*
FC_UP [pointer_deref] */
/* 900 */ NdrFcShort( 0xfffffdd8 ),     /* Offset= -
552 (348) */
/* 902 */
                              0x12, 0x10,         /*
FC_UP [pointer_deref] */
/* 904 */ NdrFcShort( 0x2 ),  /* Offset= 2 (906) */
/* 906 */
                              0x12, 0x0,          /*
FC_UP */
/* 908 */ NdrFcShort( 0x16 ), /* Offset= 22 (930) */
/* 910 */
                              0x15,               /*
FC_STRUCT */
                              0x7,                /*
7 */
/* 912 */ NdrFcShort( 0x10 ), /* 16 */
/* 914 */ 0x6,                /* FC_SHORT */
                              0x1,                /*
FC_BYTE */
/* 916 */ 0x1,                /* FC_BYTE */
                              0x38,               /*
FC_ALIGNM4 */
/* 918 */ 0x8,                /* FC_LONG */
                              0x39,               /*
FC_ALIGNM8 */
/* 920 */ 0xb,                /* FC_HYPER */
                              0x5b,               /*
FC_END */
/* 922 */
                              0x12, 0x0,          /*
FC_UP */
/* 924 */ NdrFcShort( 0xfffffff2 ),     /* Offset= -
14 (910) */
/* 926 */
                              0x12, 0x8,          /*
FC_UP [simple_pointer] */
/* 928 */ 0x2,                /* FC_CHAR */
                              0x5c,               /*
FC_PAD */
/* 930 */
                              0x1a,               /*
FC_BOGUS_STRUCT */
                              0x7,                /*
7 */
/* 932 */ NdrFcShort( 0x20 ), /* 32 */
/* 934 */ NdrFcShort( 0x0 ),  /* 0 */
/* 936 */ NdrFcShort( 0x0 ),  /* Offset= 0 (936) */
/* 938 */ 0x8,                /* FC_LONG */
                              0x8,                /*
FC_LONG */
/* 940 */ 0x6,                /* FC_SHORT */
                              0x6,                /*
FC_SHORT */
/* 942 */ 0x6,                /* FC_SHORT */
                              0x6,                /*
FC_SHORT */
/* 944 */ 0x4c,               /* FC_EMBEDDED_COMPLEX
*/
                              0x0,                /*
0 */
/* 946 */ NdrFcShort( 0xfffffc54 ),     /* Offset= -
940 (6) */
/* 948 */ 0x5c,               /* FC_PAD */
                              0x5b,               /*
FC_END */
/* 950 */ 0xb4,               /* FC_USER_MARSHAL */
                              0x83,               /*
131 */
/* 952 */ NdrFcShort( 0x0 ),  /* 0 */
/* 954 */ NdrFcShort( 0x18 ), /* 24 */
/* 956 */ NdrFcShort( 0x0 ),  /* 0 */
/* 958 */ NdrFcShort( 0xfffffc44 ),     /* Offset= -
956 (2) */
/* 960 */
                              0x11, 0x4,          /*
FC_RP [alloced_on_stack] */
/* 962 */ NdrFcShort( 0x6 ),  /* Offset= 6 (968) */
/* 964 */
                              0x13, 0x0,          /*
FC_OP */
/* 966 */ NdrFcShort( 0xffffffdc ),     /* Offset= -
36 (930) */
/* 968 */ 0xb4,               /* FC_USER_MARSHAL */
                              0x83,               /*
131 */
/* 970 */ NdrFcShort( 0x0 ),  /* 0 */
/* 972 */ NdrFcShort( 0x18 ), /* 24 */
/* 974 */ NdrFcShort( 0x0 ),  /* 0 */
/* 976 */ NdrFcShort( 0xfffffff4 ),     /* Offset= -
12 (964) */

                              0x0
        }
    };

const CInterfaceProxyVtbl *
_tpcc_com_ps_ProxyVtblList[] =
{
    ( CInterfaceProxyVtbl *) &_ITPCCProxyVtbl,
    0
};

const CInterfaceStubVtbl *
_tpcc_com_ps_StubVtblList[] =
{
    ( CInterfaceStubVtbl *) &_ITPCCStubVtbl,
    0
};

PCInterfaceName const
_tpcc_com_ps_InterfaceNamesList[] =
{
    "ITPCC",
    0
};


#define _tpcc_com_ps_CHECK_IID(n)
          IID_GENERIC_CHECK_IID( _tpcc_com_ps, pIID,
n)

int __stdcall _tpcc_com_ps_IID_Lookup( const IID *
pIID, int * pIndex )
{

    if(!_tpcc_com_ps_CHECK_IID(0))
        {
        *pIndex = 0;
        return 1;
        }

    return 0;
}

const ExtendedProxyFileInfo tpcc_com_ps_ProxyFileInfo
=
{
    (PCInterfaceProxyVtblList *) &
_tpcc_com_ps_ProxyVtblList,
    (PCInterfaceStubVtblList *) &
_tpcc_com_ps_StubVtblList,
    (const PCInterfaceName * ) &
_tpcc_com_ps_InterfaceNamesList,
    0, // no delegation
    & _tpcc_com_ps_IID_Lookup,
    1,
    2,
    0, /* table of [async_uuid] interfaces */
    0, /* Filler1 */
    0, /* Filler2 */
    0  /* Filler3 */
};


#endif /* defined(_M_IA64) || defined(_M_AXP64)*/
```


©2005 Hewlett-Packard Company. All rights reserved.

tpcc_com_sl.rgs

```
HKCR
{
	TPCC.StockLevel.1 = s 'StockLevel Class'
	{
		CLSID = s '{2668369E-A50D-11D2-
BA4E-00C04FBFE08B}'
	}
	TPCC.StockLevel = s 'StockLevel Class'
	{
		CurVer = s 'TPCC.StockLevel.1'
	}
	NoRemove CLSID
	{
		ForceRemove {2668369E-A50D-11D2-
BA4E-00C04FBFE08B} = s 'StockLevel Class'
		{
			ProgID = s
'TPCC.StockLevel.1'

	VersionIndependentProgID = s
'TPCC.StockLevel'
			InprocServer32 = s
'%MODULE%'
			{
				val
ThreadingModel = s 'Both'
			}
		}
	}
}
```

tpcc_dblib.cpp

```
/*	FILE:		TPCC_DBLIB.CPP
 *
Microsoft
TPC-C Kit Ver. 4.20.000
 *
Copyright
Microsoft, 1999
 *		All Rights Reserved
 *
 *
Version
4.10.000 audited by Richard Gimarc, Performance
Metrics, 3/17/99
 *
 *	PURPOSE:  Implements dblib calls for TPC-C
txns.
 *	Contact:  Charles Levine
(clevine@microsoft.com)
 *
 *  Change history:
 *		4.20.000 - updated rev number to
match kit
 *		4.10.001 - not deleting error
class in catch handler on deadlock retry;
 *
not a
functional bug, but a memory leak
 *
- had to
tweak some declarations to compile with latest SDK;
no functional change
 */

#include <windows.h>
#include <stdio.h>
#include <assert.h>

#define DBNTWIN32
#include <sqlfront.h>
#include <sqldb.h>

#ifdef ICECAP
#include <icapexp.h>
#endif

// need to declare functions for export
#define DllDecl  __declspec( dllexport )

#include "..\..\common\src\error.h"
#include "..\..\common\src\trans.h"
#include "..\..\common\src\txn_base.h"
#include "tpcc_dblib.h"

#define	DEFCLPACKSIZE
	4096

// version string; must match return value from
tpcc_version stored proc
const char		sVersion[] = "4.10.000";

const		iMaxRetries = 10;
	// how many retries on deadlock
static	long	iConnectionCount = 0;  // number
of current dblib connections

const int iErrOleDbProvider = 7312;
const char sErrTimeoutExpired[] = "Timeout expired";

BOOL APIENTRY DllMain(HMODULE hModule, DWORD
ul_reason_for_call, LPVOID lpReserved)
{
	switch( ul_reason_for_call )
	{
		case DLL_PROCESS_ATTACH:

	DisableThreadLibraryCalls(hModule);
			dbinit();		//
initialize dblib
			break;

		case DLL_PROCESS_DETACH:
			dbexit();		//
close all dblib structures/connections
			break;

		default:
			/* nothing */;
	}
	return TRUE;
}

int err_handler(DBPROCESS *dbproc, int severity, int
dberr, int oserr, LPCSTR dberrstr, LPCSTR oserrstr)
{
	CTPCC_DBLIB
	*pConn;

	assert(dbproc != NULL);
	pConn =
(CTPCC_DBLIB*)dbgetuserdata(dbproc);

	if (pConn != NULL)
	{
		pConn->SetDbLibError( severity,
dberr, oserr, dberrstr, oserrstr );
	}
	return INT_CANCEL;
}

/* FUNCTION: int msg_handler(DBPROCESS *dbproc, DBINT
msgno, int msgstate, int severity, char *msgtext)
 *
 * PURPOSE:	This function handles DB-Library
SQL Server error messages
 *
 * ARGUMENTS:	DBPROCESS		*dbproc
		DBPROCESS id pointer
 *
DBINT
		msgno
	message number
 *
int
		msgstate
	message state
 *
int
		severity
	message severity
 *
char
		*msgtext		printable
message description
 *
 * RETURNS:		int
		INT_CONTINUE		continue if
error is SQLETIME else INT_CANCEL action
 *
		INT_CANCEL
	cancel operation
 *
 * COMMENTS:	This function also sets the dead
lock dbproc variable if necessary.
 *
 */

// typedef INT (SQLAPI *DBMSGHANDLE_PROC)(PDBPROCESS,
DBINT, INT, INT, LPCSTR, LPCSTR, LPCSTR,
DBUSMALLINT);

int msg_handler(DBPROCESS *dbproc, DBINT msgno, int
msgstate, int severity,
LPCSTR
msgtext, LPCSTR srvname, LPCSTR procname, DBUSMALLINT
line)
{
```


©2005 Hewlett-Packard Company. All rights reserved.

```
        CTPCC_DBLIB
        *pConn;

        assert(dbproc != NULL);
        pConn =
(CTPCC_DBLIB*)dbgetuserdata(dbproc);

        if (pConn != NULL)
        {
                pConn->SetSqlError( msgno,
msgstate, severity, msgtext );
        }

        return 0;
}

/* FUNCTION: void UtilStrCpy(char * pDest, char *
pSrc, int n)
 *
 * PURPOSE:         This function copies n characters
from string pSrc to pDst and places a
 *                          null character at the
end of the destination string.
 *
 * ARGUMENTS:       char
        *pDest    destination string pointer
 *                                  char
                  *pSrc     source string pointer
 *                                  int
                          n
        number of characters to copy
 *
 * RETURNS:                 None
 *
 * COMMENTS:        Unlike strncpy this function
ensures that the result string is
 *                                  always null
terminated.
 *
 */

inline static void UtilStrCpy(char * pDest, const
BYTE * pSrc, int n)
{
    strncpy(pDest, (char *)pSrc, n);
    pDest[n] = '\0';

        return;
}

/* FUNCTION: CTPCC_DBLIB_ERR::ErrorText
 *
 */

char* CTPCC_DBLIB_ERR::ErrorText(void)
{
        int i;

        static SERRORMSG errorMsgs[] =
        {
                { ERR_WRONG_SP_VERSION,
        "Wrong version of stored procs on database
server"   },
                { ERR_INVALID_CUST,
        "Invalid Customer id,name."
                                                },
                { ERR_NO_SUCH_ORDER,
        "No orders found for customer."
                                                },
                { ERR_RETRIED_TRANS,
        "Retries before transaction succeeded."
                        },
                { 0,
                        ""


        }
        };

        static char szNotFound[] = "Unknown error
number.";

        for(i=0; errorMsgs[i].szMsg[0]; i++)
        {
                if ( m_errno ==
errorMsgs[i].iError )
                        break;
        }
        if ( !errorMsgs[i].szMsg[0] )
                return szNotFound;
        else
                return errorMsgs[i].szMsg;
}

// wrapper routine for class constructor
__declspec(dllexport) CTPCC_DBLIB* CTPCC_DBLIB_new(
        LPCSTR szServer,            // name of
SQL server
        LPCSTR szUser,                      //
user name for login
        LPCSTR szPassword,          // password
for login
        LPCSTR szHost,                      //
workstation name; shows up in sp_who; max 30 chars,
only first 10 kept by SQL Server
        LPCSTR szDatabase )         // name of
database to use
{
        return new CTPCC_DBLIB( szServer, szUser,
szPassword, szHost, szDatabase );
}


CTPCC_DBLIB::CTPCC_DBLIB (
        LPCSTR szServer,            // name of
SQL server
        LPCSTR szUser,                      //
user name for login
        LPCSTR szPassword,          // password
for login
        LPCSTR szHost,                      //
workstation name; shows up in sp_who; max 30 chars,
only first 10 kept by SQL Server
        LPCSTR szDatabase )         // name of
database to use
{
        LOGINREC  *login;
        const BYTE          *pData;

        // initialization
        m_dbproc = NULL;
        m_DbLibErr = (CDBLIBERR*)NULL;
        m_SqlErr = (CSQLERR*)NULL;

        m_MaxRetries = 10;          // how many
retries on deadlock

        // increase max number of connections if
getting close
        if ( dbgetmaxprocs() < (iConnectionCount+5)
)
        {
                if (
dbsetmaxprocs(iConnectionCount+10) == FAIL )

        ThrowError(CDBLIBERR::eDbSetMaxProcs);
        }

        // allocate a login structure
        login = dblogin();
        if (login == NULL)
                ThrowError(CDBLIBERR::eLogin);
        InterlockedIncrement( &iConnectionCount );

        // register error and message handler
functions
        if (dbprocerrhandle(login, err_handler) ==
NULL)

        ThrowError(CDBLIBERR::eDbProcHandler);

        if (dbprocmsghandle(login, msg_handler) ==
NULL)

        ThrowError(CDBLIBERR::eDbProcHandler);


        DBSETLUSER(login, szUser);
        DBSETLPWD(login, szPassword);
        DBSETLHOST(login, szHost);
        DBSETLPACKET(login, (unsigned
short)DEFCLPACKSIZE);
        DBSETLVERSION(login, DBVER60);
        // use dblib ver 6.0 client behavior

        // set time to wait for login
        if (dbsetlogintime(60) == FAIL)
                ThrowError(CDBLIBERR::eDbSet);

        // set time to wait for statement execution
        if (dbsettime(180) == FAIL)
                ThrowError(CDBLIBERR::eDbSet);

        m_dbproc = dbopen(login, szServer);

        // deallocate login structure before
checking for success
        dbfreelogin( login );
```


©2005 Hewlett-Packard Company. All rights reserved.

```
        if (m_dbproc == NULL)
                ThrowError(CDBLIBERR::eDbOpen);

        // save address of class instance so that
the message and error handler
        // can get to data.
        dbsetuserdata(m_dbproc, (LPVOID)this);

        // Use the the right database
        if (dbuse(m_dbproc, szDatabase) == FAIL)
                ThrowError(CDBLIBERR::eDbUse);

        dbcmd(m_dbproc, "set nocount on ");
                // do not return row counts
        dbcmd(m_dbproc, "set XACT_ABORT ON");
        // rollback transaction on abort

        if (dbsqlexec(m_dbproc) == FAIL)

        ThrowError(CDBLIBERR::eDbSqlExec);

        DiscardNextResults(2);

        // verify that version of stored procs on
server is correct
        dbrpcinit(m_dbproc, "tpcc_version", 0);

        if (dbrpcexec(m_dbproc) == FAIL)

        ThrowError(CDBLIBERR::eDbRpcExec);

        if (dbresults(m_dbproc) != SUCCEED)

        ThrowError(CDBLIBERR::eDbResults);

        if (dbnextrow(m_dbproc) != REG_ROW)

        ThrowError(CDBLIBERR::eDbNextRow);

        char szSrvVersion[16];
        pData=dbdata(m_dbproc, 1);
        if (pData)
                UtilStrCpy(szSrvVersion, pData,
dbdatlen(m_dbproc, 1));
        else
                szSrvVersion[0]=0;
        if (strcmp(szSrvVersion,sVersion))
                throw new CTPCC_DBLIB_ERR(
CTPCC_DBLIB_ERR::ERR_WRONG_SP_VERSION );


        DiscardNextRows(0);
        DiscardNextResults(0);
}


CTPCC_DBLIB::~CTPCC_DBLIB( void )
{
        // close db connection and deallocate
resources
        dbclose(m_dbproc);
        InterlockedDecrement( &iConnectionCount );
        if (m_DbLibErr != NULL)
                delete m_DbLibErr;
        if (m_SqlErr != NULL)
                delete m_SqlErr;
}

void CTPCC_DBLIB::SetDbLibError(int severity, int
dberr, int oserr, LPCSTR dberrstr, LPCSTR oserrstr)
{
        delete m_DbLibErr;
        m_DbLibErr = new
CDBLIBERR(CDBLIBERR::eUnknown, severity, dberr,
oserr);

        if (dberrstr != NULL)
        {
                m_DbLibErr->m_dberrstr = new
char[ strlen(dberrstr)+1 ];
                strcpy( m_DbLibErr->m_dberrstr,
dberrstr );
        }

        if (oserrstr != NULL)
        {
                m_DbLibErr->m_oserrstr = new
char[ strlen(oserrstr)+1 ];
                strcpy( m_DbLibErr->m_oserrstr,
oserrstr );
        }

}

void CTPCC_DBLIB::SetSqlError( int /*DBINT*/ msgno,
int msgstate, int severity, LPCSTR msgtext )
{
        if (m_SqlErr == NULL)
                m_SqlErr = new CSQLERR();

        m_SqlErr->m_msgno = msgno;
        m_SqlErr->m_msgstate = msgstate;
        m_SqlErr->m_severity = severity;

        delete [] m_SqlErr->m_msgtext;
        if (msgtext != NULL)
        {
                m_SqlErr->m_msgtext = new char[
strlen(msgtext)+1 ];
                strcpy( m_SqlErr->m_msgtext,
msgtext );
        }
}

void CTPCC_DBLIB::ThrowError( CDBLIBERR::ACTION
eAction )
{
        // discard anything still in return buffer
        DiscardNextRows(-1);
        DiscardNextResults(-1);

        // check for SQL Server error first;  if
yes, throw it and ignore any DBLib error.
        if (m_SqlErr != NULL)
        {
                CSQLERR             *pSqlErr;
                pSqlErr = m_SqlErr;
                m_SqlErr = NULL;    // clear our
pointer to instance; catch handler will delete
                throw pSqlErr;
        }

        CDBLIBERR *pDbLibErr;
        if (m_DbLibErr == NULL)
                // this case isn't expected to
happen, since it means that an error was returned
                // but the error handlers were
not called.
                pDbLibErr = new
CDBLIBERR(eAction);
        else
        {
                pDbLibErr = m_DbLibErr;
                pDbLibErr->m_eAction = eAction;
                m_DbLibErr = NULL;            //
clear our pointer to instance; catch handler will
delete
        }

        throw pDbLibErr;
}

// Read and discard rows until no more.  Throw an
exception if number of rows read doesn't
// match number of rows expected.  The row count will
be ignored if the expected count value
// passed in is negative.  A typical use of this
routine is to verify that there are no more
// rows to be read.
void CTPCC_DBLIB::DiscardNextRows(int iExpectedCount)
{
        int                 iRowsRead = 0;
        RETCODE   rc;

        while (TRUE)
        {
                rc = dbnextrow(m_dbproc);
                if (rc == NO_MORE_ROWS)
                        break;
                if (rc == FAIL)
                {
                        if (iExpectedCount >=
0)

        ThrowError(CDBLIBERR::eDbNextRow);
                        else
                                break;
                }
                iRowsRead++;
        }

        if ((iExpectedCount >= 0) &&
                (iExpectedCount != iRowsRead))

        ThrowError(CDBLIBERR::eWrongRowCount);
}

// Read and discard results until no more.  Throw an
exception if number of result sets read doesn't
```


©2005 Hewlett-Packard Company. All rights reserved.

```
// match number expected.  The result set count will
be ignored if the expected count value
// passed in is negative.  A typical use of this
routine is to verify that there are no more
// result sets to be read.
void CTPCC_DBLIB::DiscardNextResults(int
iExpectedCount)
{
          int                 iResultsRead = 0;
          RETCODE   rc;

          while (TRUE)
          {
                    rc = dbresults(m_dbproc);
                    if (rc == NO_MORE_RESULTS)
                              break;
                    if (rc == FAIL)
                    {
                              if (iExpectedCount >=
0)

          ThrowError(CDBLIBERR::eDbResults);
                              else
                                        break;
                    }

                    DiscardNextRows(-1);
                    iResultsRead++;
          }

          if ((iExpectedCount >= 0) &&
                    (iExpectedCount != iResultsRead))

          ThrowError(CDBLIBERR::eWrongRowCount);
}

void CTPCC_DBLIB::StockLevel()
{
          int                         iTryCount =
0;
          const BYTE          *pData;

          ResetError();

          while (TRUE)
          {
                    try
                    {
                              dbrpcinit(m_dbproc,
"tpcc_stocklevel", 0);

                              dbrpcparam(m_dbproc,
NULL, 0, SQLINT2, -1, -1, (BYTE *)
&m_txn.StockLevel.w_id);                // @w_id
smallint
                              dbrpcparam(m_dbproc,
NULL, 0, SQLINT1, -1, -1, (BYTE *)
&m_txn.StockLevel.d_id);                // @d_id
tinyint
                              dbrpcparam(m_dbproc,
NULL, 0, SQLINT2, -1, -1, (BYTE *)
&m_txn.StockLevel.threshold);   // @threshhold
smallint
                              if (dbrpcexec(m_dbproc)
== FAIL)

          ThrowError(CDBLIBERR::eDbRpcExec);

                              if (dbresults(m_dbproc)
!= SUCCEED)

          ThrowError(CDBLIBERR::eDbResults);

                              if (dbnextrow(m_dbproc)
!= REG_ROW)

          ThrowError(CDBLIBERR::eDbNextRow);

                              if
(pData=dbdata(m_dbproc, 1))

          m_txn.StockLevel.low_stock = *((long *)
pData);

                              DiscardNextRows(0);
                              DiscardNextResults(0);


          m_txn.StockLevel.exec_status_code = eOK;
                              return;
                    }
                    catch (CSQLERR *e)
                    {
                              if ((e->m_msgno == 1205
||
                                        (e->m_msgno
== iErrOleDbProvider &&
                                        strstr(e-
>m_msgtext, sErrTimeoutExpired) != NULL)) &&
                                        (++iTryCount
<= iMaxRetries))
                              {
                                        // hit
deadlock; backoff for increasingly longer period
                                        delete e;
                                        Sleep(10 *
iTryCount);
                              }
                              else
                                        throw;
                    }
          }         // while (TRUE)

          //if (iTryCount)
          //        throw new
CTPCC_DBLIB_ERR(CTPCC_DBLIB_ERR::ERR_RETRIED_TRANS,
iTryCount);
}


void CTPCC_DBLIB::NewOrder()
{
          int                         i;
          DBINT               commit_flag;
          DBDATETIME          datetime;
          DBDATEREC dateREC;

          int                         iTryCount =
0;
          const BYTE          *pData;

          ResetError();

          while (TRUE)
          {
                    try
                    {
                              dbrpcinit(m_dbproc,
"tpcc_neworder", 0);

                              dbrpcparam(m_dbproc,
NULL, 0, SQLINT2, -1, -1, (BYTE *)
&m_txn.NewOrder.w_id);
                              dbrpcparam(m_dbproc,
NULL, 0, SQLINT1, -1, -1, (BYTE *)
&m_txn.NewOrder.d_id);
                              dbrpcparam(m_dbproc,
NULL, 0, SQLINT4, -1, -1, (BYTE *)
&m_txn.NewOrder.c_id);
                              dbrpcparam(m_dbproc,
NULL, 0, SQLINT1, -1, -1, (BYTE *)
&m_txn.NewOrder.o_ol_cnt);

                              // check whether any
order lines are for a remote warehouse

          m_txn.NewOrder.o_all_local = 1;
                              for (i = 0; i <
m_txn.NewOrder.o_ol_cnt; i++)
                              {
                                        if
(m_txn.NewOrder.OL[i].ol_supply_w_id !=
m_txn.NewOrder.w_id)
                                        {

          m_txn.NewOrder.o_all_local = 0;  // at
least one remote warehouse

          break;
                                        }
                              }
                              dbrpcparam(m_dbproc,
NULL, 0, SQLINT1, -1, -1, (BYTE *)
&m_txn.NewOrder.o_all_local);

                              for (i = 0; i <
m_txn.NewOrder.o_ol_cnt; i++)
                              {

          dbrpcparam(m_dbproc, NULL, 0, SQLINT4, -1,
-1, (BYTE *) &m_txn.NewOrder.OL[i].ol_i_id);

          dbrpcparam(m_dbproc, NULL, 0, SQLINT2, -1,
-1, (BYTE *) &m_txn.NewOrder.OL[i].ol_supply_w_id);

          dbrpcparam(m_dbproc, NULL, 0, SQLINT2, -1,
-1, (BYTE *) &m_txn.NewOrder.OL[i].ol_quantity);
                              }
```


©2005 Hewlett-Packard Company. All rights reserved.

```
                                if (dbrpcexec(m_dbproc)
== FAIL)
          ThrowError(CDBLIBERR::eDbRpcExec);


                                // Get order line
results
          m_txn.NewOrder.total_amount = 0;
                                for (i = 0;
i<m_txn.NewOrder.o_ol_cnt; i++)
                                {
                                          if
(dbresults(m_dbproc) != SUCCEED)
          ThrowError(CDBLIBERR::eDbResults);
                                          if
(dbnumcols(m_dbproc) != 5)
          ThrowError(CDBLIBERR::eWrongNumCols);
                                          if
(dbnextrow(m_dbproc) != REG_ROW)
          ThrowError(CDBLIBERR::eDbNextRow);


          if(pData=dbdata(m_dbproc, 1))
          UtilStrCpy(m_txn.NewOrder.OL[i].ol_i_name,
pData, dbdatlen(m_dbproc, 1));
          if(pData=dbdata(m_dbproc, 2))
          m_txn.NewOrder.OL[i].ol_stock =
(*(DBSMALLINT *) pData);
          if(pData=dbdata(m_dbproc, 3))
          UtilStrCpy(m_txn.NewOrder.OL[i].ol_brand_ge
neric, pData, dbdatlen(m_dbproc, 3));
          if(pData=dbdata(m_dbproc, 4))
          dbconvert(m_dbproc, SQLNUMERIC,
(LPCBYTE)pData, dbdatlen(m_dbproc,4),
          SQLFLT8, (BYTE
*)&m_txn.NewOrder.OL[i].ol_i_price, 8);
          if(pData=dbdata(m_dbproc, 5))



          dbconvert(m_dbproc, SQLNUMERIC,
(LPCBYTE)pData, dbdatlen(m_dbproc,5),
          SQLFLT8, (BYTE
*)&m_txn.NewOrder.OL[i].ol_amount, 8);
          m_txn.NewOrder.total_amount =
m_txn.NewOrder.total_amount +
m_txn.NewOrder.OL[i].ol_amount;


          DiscardNextRows(0);
                                }


                                // get remaining values
for w_tax, d_tax, o_id, c_last, c_discount, c_credit,
o_entry_d, commit_flag
                                if (dbresults(m_dbproc)
!= SUCCEED)
          ThrowError(CDBLIBERR::eDbResults);
                                if (dbnextrow(m_dbproc)
!= REG_ROW)
          ThrowError(CDBLIBERR::eDbNextRow);
                                if (dbnumcols(m_dbproc)
!= 8)
          ThrowError(CDBLIBERR::eWrongNumCols);
                                if
(pData=dbdata(m_dbproc, 1))



          dbconvert(m_dbproc, SQLNUMERIC,
(LPCBYTE)pData, dbdatlen(m_dbproc,1), SQLFLT8, (BYTE
*)&m_txn.NewOrder.w_tax, 8);
                                if
(pData=dbdata(m_dbproc, 2))
          dbconvert(m_dbproc, SQLNUMERIC,
(LPCBYTE)pData, dbdatlen(m_dbproc,2), SQLFLT8, (BYTE
*)&m_txn.NewOrder.d_tax, 8);
                                if
(pData=dbdata(m_dbproc, 3))
          m_txn.NewOrder.o_id = (*(DBINT *) pData);
                                if
(pData=dbdata(m_dbproc, 4))
          UtilStrCpy(m_txn.NewOrder.c_last, pData,
dbdatlen(m_dbproc, 4));
                                if
(pData=dbdata(m_dbproc, 5))
          dbconvert(m_dbproc, SQLNUMERIC,
(LPCBYTE)pData, dbdatlen(m_dbproc,5), SQLFLT8, (BYTE
*)&m_txn.NewOrder.c_discount, 8);
                                if
(pData=dbdata(m_dbproc, 6))
          UtilStrCpy(m_txn.NewOrder.c_credit, pData,
dbdatlen(m_dbproc, 6));
                                if
(pData=dbdata(m_dbproc, 7))
                                {
                                          datetime =
*((DBDATETIME *) pData);
          dbdatecrack(m_dbproc, &daterec, &datetime);
          m_txn.NewOrder.o_entry_d.year   =
daterec.year;
          m_txn.NewOrder.o_entry_d.month  =
daterec.month;
          m_txn.NewOrder.o_entry_d.day    =
daterec.day;
          m_txn.NewOrder.o_entry_d.hour   =
daterec.hour;
          m_txn.NewOrder.o_entry_d.minute =
daterec.minute;
          m_txn.NewOrder.o_entry_d.second =
daterec.second;
                                }
                                if
(pData=dbdata(m_dbproc, 8))
                                          commit_flag =
(*(DBTINYINT *) pData);
                                DiscardNextRows(0);
                                DiscardNextResults(0);


                                if (commit_flag == 1)
                                {
          m_txn.NewOrder.total_amount *= ((1 +
m_txn.NewOrder.w_tax + m_txn.NewOrder.d_tax) * (1 -
m_txn.NewOrder.c_discount));
          m_txn.NewOrder.exec_status_code = eOK;
                                }
                                else
          m_txn.NewOrder.exec_status_code =
eInvalidItem;
                                return;
                      }
                      catch (CSQLERR *e)
                      {
                                if ((e->m_msgno == 1205
||
                                          (e->m_msgno
== iErrOleDbProvider &&
                                          strstr(e-
>m_msgtext, sErrTimeoutExpired) != NULL)) &&
```


©2005 Hewlett-Packard Company. All rights reserved.

```
                                        (++iTryCount
<= iMaxRetries))
                                {
                                        // hit
deadlock; backoff for increasingly longer period
                                        delete e;
                                        Sleep(10 *
iTryCount);
                                }
                                else
                                        throw;
                        }
                        // while (TRUE)
          }

//        if (iTryCount)
//                        throw new
CTPCC_DBLIB_ERR(CTPCC_DBLIB_ERR::ERR_RETRIED_TRANS,
iTryCount);
}


void CTPCC_DBLIB::Payment()
{
          DBDATETIME          datetime;
          DBDATEREC daterec;

          int                           iTryCount =
0;
          const BYTE          *pData;

          ResetError();

          while (TRUE)
          {
                        try
                        {
                                dbrpcinit(m_dbproc,
"tpcc_payment", 0);

                                dbrpcparam(m_dbproc,
NULL, 0, SQLINT2, -1, -1, (BYTE *)
&m_txn.Payment.w_id);
                                dbrpcparam(m_dbproc,
NULL, 0, SQLINT2, -1, -1, (BYTE *)
&m_txn.Payment.c_w_id);
                                dbrpcparam(m_dbproc,
NULL, 0, SQLFLT8, -1, -1, (BYTE *)
&m_txn.Payment.h_amount);
                                dbrpcparam(m_dbproc,
NULL, 0, SQLINT1, -1, -1, (BYTE *)
&m_txn.Payment.d_id);
                                dbrpcparam(m_dbproc,
NULL, 0, SQLINT1, -1, -1, (BYTE *)
&m_txn.Payment.c_d_id);
                                dbrpcparam(m_dbproc,
NULL, 0, SQLINT4, -1, -1, (BYTE *)
&m_txn.Payment.c_id);

                                // if customer id is
zero, then payment is by name
                                if (m_txn.Payment.c_id
== 0)

          dbrpcparam(m_dbproc, NULL, 0, SQLCHAR, -1,
strlen(m_txn.Payment.c_last), (unsigned char
*)m_txn.Payment.c_last);

                                        if (dbrpcexec(m_dbproc)
== FAIL)

          ThrowError(CDBLIBERR::eDbRpcExec);

                                        if (dbresults(m_dbproc)
!= SUCCEED)

          ThrowError(CDBLIBERR::eDbResults);

                                        if (dbnextrow(m_dbproc)
!= REG_ROW)

          ThrowError(CDBLIBERR::eDbNextRow);

                                        if (dbnumcols(m_dbproc)
!= 27)

          ThrowError(CDBLIBERR::eWrongNumCols);

                                        if
(pData=dbdata(m_dbproc, 1))

          m_txn.Payment.c_id = *((DBINT *) pData);
                                        if
(pData=dbdata(m_dbproc, 2))

          UtilStrCpy(m_txn.Payment.c_last, pData,
dbdatlen(m_dbproc, 2));
                                        if
(pData=dbdata(m_dbproc, 3))
                                        {
                                                datetime =
*((DBDATETIME *) pData);

          dbdatecrack(m_dbproc, &daterec, &datetime);

          m_txn.Payment.h_date.year   = daterec.year;

          m_txn.Payment.h_date.month  =
daterec.month;

          m_txn.Payment.h_date.day    = daterec.day;

          m_txn.Payment.h_date.hour   = daterec.hour;

          m_txn.Payment.h_date.minute =
daterec.minute;

          m_txn.Payment.h_date.second =
daterec.second;
                                        }
                                        if
(pData=dbdata(m_dbproc, 4))

          UtilStrCpy(m_txn.Payment.w_street_1, pData,
dbdatlen(m_dbproc, 4));

                                        if
(pData=dbdata(m_dbproc, 5))

          UtilStrCpy(m_txn.Payment.w_street_2, pData,
dbdatlen(m_dbproc, 5));
                                        if
(pData=dbdata(m_dbproc, 6))

          UtilStrCpy(m_txn.Payment.w_city, pData,
dbdatlen(m_dbproc, 6));
                                        if
(pData=dbdata(m_dbproc, 7))

          UtilStrCpy(m_txn.Payment.w_state, pData,
dbdatlen(m_dbproc, 7));
                                        if
(pData=dbdata(m_dbproc, 8))

          UtilStrCpy(m_txn.Payment.w_zip, pData,
dbdatlen(m_dbproc, 8));
                                        if
(pData=dbdata(m_dbproc, 9))

          UtilStrCpy(m_txn.Payment.d_street_1, pData,
dbdatlen(m_dbproc, 9));
                                        if
(pData=dbdata(m_dbproc, 10))

          UtilStrCpy(m_txn.Payment.d_street_2, pData,
dbdatlen(m_dbproc, 10));
                                        if
(pData=dbdata(m_dbproc, 11))

          UtilStrCpy(m_txn.Payment.d_city, pData,
dbdatlen(m_dbproc, 11));
                                        if
(pData=dbdata(m_dbproc, 12))

          UtilStrCpy(m_txn.Payment.d_state, pData,
dbdatlen(m_dbproc, 12));
                                        if
(pData=dbdata(m_dbproc, 13))

          UtilStrCpy(m_txn.Payment.d_zip, pData,
dbdatlen(m_dbproc, 13));
                                        if
(pData=dbdata(m_dbproc, 14))

          UtilStrCpy(m_txn.Payment.c_first, pData,
dbdatlen(m_dbproc, 14));
                                        if
(pData=dbdata(m_dbproc, 15))

          UtilStrCpy(m_txn.Payment.c_middle, pData,
dbdatlen(m_dbproc, 15));
                                        if
(pData=dbdata(m_dbproc, 16))

          UtilStrCpy(m_txn.Payment.c_street_1, pData,
dbdatlen(m_dbproc, 16));
                                        if
(pData=dbdata(m_dbproc, 17))
```


©2005 Hewlett-Packard Company. All rights reserved.

```
          UtilStrCpy(m_txn.Payment.c_street_2, pData,
dbdatlen(m_dbproc, 17));
                              if
(pData=dbdata(m_dbproc, 18))

          UtilStrCpy(m_txn.Payment.c_city, pData,
dbdatlen(m_dbproc, 18));
                              if
(pData=dbdata(m_dbproc, 19))

          UtilStrCpy(m_txn.Payment.c_state, pData,
dbdatlen(m_dbproc, 19));
                              if
(pData=dbdata(m_dbproc, 20))

          UtilStrCpy(m_txn.Payment.c_zip, pData,
dbdatlen(m_dbproc, 20));
                              if
(pData=dbdata(m_dbproc, 21))

          UtilStrCpy(m_txn.Payment.c_phone, pData,
dbdatlen(m_dbproc, 21));
                              if
(pData=dbdata(m_dbproc, 22))
                              {
                                        datetime =
*((DBDATETIME *) pData);

          dbdatecrack(m_dbproc, &daterec, &datetime);

          m_txn.Payment.c_since.year   =
daterec.year;

          m_txn.Payment.c_since.month  =
daterec.month;

          m_txn.Payment.c_since.day    = daterec.day;

          m_txn.Payment.c_since.hour   =
daterec.hour;

          m_txn.Payment.c_since.minute =
daterec.minute;

          m_txn.Payment.c_since.second =
daterec.second;
                              }

          if(pData=dbdata(m_dbproc, 23))

          UtilStrCpy(m_txn.Payment.c_credit, pData,
dbdatlen(m_dbproc, 23));

          if(pData=dbdata(m_dbproc, 24))

          dbconvert(m_dbproc, SQLNUMERIC,
(LPCBYTE)pData, dbdatlen(m_dbproc,24), SQLFLT8, (BYTE
*)&m_txn.Payment.c_credit_lim, 8);

          if(pData=dbdata(m_dbproc, 25))

          dbconvert(m_dbproc, SQLNUMERIC,
(LPCBYTE)pData, dbdatlen(m_dbproc,25), SQLFLT8, (BYTE
*)&m_txn.Payment.c_discount, 8);

          if(pData=dbdata(m_dbproc, 26))

          dbconvert(m_dbproc, SQLNUMERIC,
(LPCBYTE)pData, dbdatlen(m_dbproc,26), SQLFLT8, (BYTE
*)&m_txn.Payment.c_balance, 8);

          if(pData=dbdata(m_dbproc, 27))

          UtilStrCpy(m_txn.Payment.c_data, pData,
dbdatlen(m_dbproc, 27));

                              DiscardNextRows(0);
                              DiscardNextResults(0);


                              if (m_txn.Payment.c_id
== 0)
                                        throw new
CTPCC_DBLIB_ERR( CTPCC_DBLIB_ERR::ERR_INVALID_CUST );
                              else

          m_txn.Payment.exec_status_code = eOK;

                              return;
                    }
                    catch (CSQLERR *e)
                    {
                              if ((e->m_msgno == 1205
||
                                        (e->m_msgno
== iErrOleDbProvider &&
                                        strstr(e-
>m_msgtext, sErrTimeoutExpired) != NULL)) &&
                                        (++iTryCount
<= iMaxRetries))
                              {
                                        // hit
deadlock; backoff for increasingly longer period
                                        delete e;
                                        Sleep(10 *
iTryCount);
                              }
                              else
                                        throw;
                    }
          }         // while (TRUE)

//        if (iTryCount)
//                  throw new
CTPCC_DBLIB_ERR(CTPCC_DBLIB_ERR::ERR_RETRIED_TRANS,
iTryCount);
}



void CTPCC_DBLIB::OrderStatus()
{
          int                         i;
          DBDATETIME          datetime;
          DBDATEREC daterec;
          int                         iTryCount =
0;
          RETCODE             rc;
          const BYTE          *pData;

          ResetError();

          while (TRUE)
          {
                    try
                    {
                              dbrpcinit(m_dbproc,
"tpcc_orderstatus", 0);

                              dbrpcparam(m_dbproc,
NULL, 0, SQLINT2, -1, -1, (BYTE *)
&m_txn.OrderStatus.w_id);
                              dbrpcparam(m_dbproc,
NULL, 0, SQLINT1, -1, -1, (BYTE *)
&m_txn.OrderStatus.d_id);
                              dbrpcparam(m_dbproc,
NULL, 0, SQLINT4, -1, -1, (BYTE *)
&m_txn.OrderStatus.c_id);

                              // if customer id is
zero, then order status is by name
                              if
(m_txn.OrderStatus.c_id == 0)

          dbrpcparam(m_dbproc, NULL, 0, SQLCHAR, -1,
strlen(m_txn.OrderStatus.c_last), (unsigned char
*)m_txn.OrderStatus.c_last);


                              if (dbrpcexec(m_dbproc)
== FAIL)

          ThrowError(CDBLIBERR::eDbRpcExec);

                              // Get order lines
                              if (dbresults(m_dbproc)
!= SUCCEED)
                              {
                                        if
((m_DbLibErr == NULL) && (m_SqlErr == NULL))

          throw new CTPCC_DBLIB_ERR(
CTPCC_DBLIB_ERR::ERR_NO_SUCH_ORDER );
                                        else

          ThrowError(CDBLIBERR::eDbResults);
                              }

                              if (dbnumcols(m_dbproc)
!= 5)

          ThrowError(CDBLIBERR::eWrongNumCols);

                              i = 0;
                              while (TRUE)
                              {
```


©2005 Hewlett-Packard Company. All rights reserved.

```
                                        rc =
dbnextrow(m_dbproc);
                                        if (rc ==
NO_MORE_ROWS)
          break;
                                        if (rc !=
REG_ROW)
          ThrowError(CDBLIBERR::eDbNextRow);


          if(pData=dbdata(m_dbproc, 1))

          m_txn.OrderStatus.OL[i].ol_supply_w_id =
(*(DBSMALLINT *) pData);

          if(pData=dbdata(m_dbproc, 2))

          m_txn.OrderStatus.OL[i].ol_i_id = (*(DBINT
*) pData);

          if(pData=dbdata(m_dbproc, 3))

          m_txn.OrderStatus.OL[i].ol_quantity =
(*(DBSMALLINT *) pData);

          if(pData=dbdata(m_dbproc, 4))

          dbconvert(m_dbproc, SQLNUMERIC,
(LPCBYTE)pData, dbdatlen(m_dbproc,4),

                      SQLFLT8, (BYTE
*)&m_txn.OrderStatus.OL[i].ol_amount, 8);

          if(pData=dbdata(m_dbproc, 5))
                                        {

          datetime = *((DBDATETIME *) pData);

          dbdatecrack(m_dbproc, &daterec, &datetime);

          m_txn.OrderStatus.OL[i].ol_delivery_d.year
= daterec.year;

          m_txn.OrderStatus.OL[i].ol_delivery_d.month
= daterec.month;

          m_txn.OrderStatus.OL[i].ol_delivery_d.day
= daterec.day;

          m_txn.OrderStatus.OL[i].ol_delivery_d.hour
= daterec.hour;

          m_txn.OrderStatus.OL[i].ol_delivery_d.minut
e = daterec.minute;

          m_txn.OrderStatus.OL[i].ol_delivery_d.secon
d = daterec.second;
                                        }
                                        i++;
                              }
```

```
          m_txn.OrderStatus.o_ol_cnt = i;


                                  if (dbresults(m_dbproc)
!= SUCCEED)
          ThrowError(CDBLIBERR::eDbResults);

                                  if (dbnextrow(m_dbproc)
!= REG_ROW)
          ThrowError(CDBLIBERR::eDbNextRow);

                                  if (dbnumcols(m_dbproc)
!= 8)
          ThrowError(CDBLIBERR::eWrongNumCols);


          if(pData=dbdata(m_dbproc, 1))

          m_txn.OrderStatus.c_id = (*(DBINT *)
pData);

          if(pData=dbdata(m_dbproc, 2))

          UtilStrCpy(m_txn.OrderStatus.c_last, pData,
dbdatlen(m_dbproc,2));

          if(pData=dbdata(m_dbproc, 3))

          UtilStrCpy(m_txn.OrderStatus.c_first,
pData, dbdatlen(m_dbproc,3));

          if(pData=dbdata(m_dbproc, 4))

          UtilStrCpy(m_txn.OrderStatus.c_middle,
pData, dbdatlen(m_dbproc, 4));

          if(pData=dbdata(m_dbproc, 5))
                                  {
                                            datetime =
*((DBDATETIME *) pData);

          dbdatecrack(m_dbproc, &daterec, &datetime);

          m_txn.OrderStatus.o_entry_d.year   =
daterec.year;

          m_txn.OrderStatus.o_entry_d.month  =
daterec.month;

          m_txn.OrderStatus.o_entry_d.day    =
daterec.day;

          m_txn.OrderStatus.o_entry_d.hour   =
daterec.hour;

          m_txn.OrderStatus.o_entry_d.minute =
daterec.minute;
```

```
          m_txn.OrderStatus.o_entry_d.second =
daterec.second;
                                  }

          if(pData=dbdata(m_dbproc, 6))

          m_txn.OrderStatus.o_carrier_id =
(*(DBSMALLINT *) pData);

          if(pData=dbdata(m_dbproc, 7))

          dbconvert(m_dbproc, SQLNUMERIC,
(LPCBYTE)pData, dbdatlen(m_dbproc,7),

            SQLFLT8, (BYTE
*)&m_txn.OrderStatus.c_balance, 8);

          if(pData=dbdata(m_dbproc, 8))

          m_txn.OrderStatus.o_id = (*(DBINT *)
pData);

                                  DiscardNextRows(0);
                                  DiscardNextResults(0);


                                  if
(m_txn.OrderStatus.o_ol_cnt == 0)
                                            throw new
CTPCC_DBLIB_ERR( CTPCC_DBLIB_ERR::ERR_NO_SUCH_ORDER
);
                                  else if
(m_txn.OrderStatus.c_id == 0 &&
m_txn.OrderStatus.c_last[0] == 0)
                                            throw new
CTPCC_DBLIB_ERR( CTPCC_DBLIB_ERR::ERR_INVALID_CUST );
                                  else

          m_txn.OrderStatus.exec_status_code = eOK;

                                  return;
                        }
                        catch (CSQLERR *e)
                        {
                                  if ((e->m_msgno == 1205
||
                                            (e->m_msgno
== iErrOleDbProvider &&
                                            strstr(e-
>m_msgtext, sErrTimeoutExpired) != NULL)) &&
                                            (++iTryCount
<= iMaxRetries))
                                  {
                                            // hit
deadlock; backoff for increasingly longer period
                                            delete e;
                                            Sleep(10 *
iTryCount);
                                  }
                                  else
                                            throw;
                        }
```


©2005 Hewlett-Packard Company. All rights reserved.

```
	}		// while (TRUE)

//	if (iTryCount)
//		throw new
CTPCC_DBLIB_ERR(CTPCC_DBLIB_ERR::ERR_RETRIED_TRANS,
iTryCount);
}


void CTPCC_DBLIB::Delivery()
{
	int				i;
	int				iTryCount =
0;
	const BYTE		*pData;

	ResetError();

	while (TRUE)
	{
		try
		{
			dbrpcinit(m_dbproc,
"tpcc_delivery", 0);

			dbrpcparam(m_dbproc,
NULL, 0, SQLINT2, -1, -1, (BYTE *)
&m_txn.Delivery.w_id);
			dbrpcparam(m_dbproc,
NULL, 0, SQLINT1, -1, -1, (BYTE *)
&m_txn.Delivery.o_carrier_id);

			if (dbrpcexec(m_dbproc)
== FAIL)

	ThrowError(CDBLIBERR::eDbRpcExec);

			if (dbresults(m_dbproc)
!= SUCCEED)

	ThrowError(CDBLIBERR::eDbResults);

			if (dbnextrow(m_dbproc)
!= REG_ROW)

	ThrowError(CDBLIBERR::eDbNextRow);

			if (dbnumcols(m_dbproc)
!= 10)

	ThrowError(CDBLIBERR::eWrongNumCols);

			for (i=0; i<10; i++)
			{
				if (pData =
dbdata(m_dbproc, i+1))

	m_txn.Delivery.o_id[i] = *((DBINT *)pData);
			}

			DiscardNextRows(0);
			DiscardNextResults(0);

	m_txn.Delivery.exec_status_code = eOK;
				return;
		}
		catch (CSQLERR *e)
		{
				if ((e->m_msgno == 1205
||
					(e->m_msgno
== iErrOleDbProvider &&
					strstr(e-
>m_msgtext, sErrTimeoutExpired) != NULL)) &&
					(++iTryCount
<= iMaxRetries))
				{
					// hit
deadlock; backoff for increasingly longer period
					delete e;
					Sleep(10 *
iTryCount);
				}
				else
					throw;
		}
	}		// while (TRUE)

//	if (iTryCount)
//		throw new
CTPCC_DBLIB_ERR(CTPCC_DBLIB_ERR::ERR_RETRIED_TRANS,
iTryCount);
}

void CTPCC_DBLIB::ResetError()
{
	if (m_DbLibErr != NULL)
	{
		delete m_DbLibErr;
		m_DbLibErr = (CDBLIBERR*)NULL;
	}

	if (m_SqlErr != NULL)
	{
		delete m_SqlErr;
		m_SqlErr = (CSQLERR*)NULL;
	}
	return;
}
```

tpcc_dblib.h

```
/*	FILE:		TPCC_DBLIB.H
 *
 *
 *
```

```
                                eDbUse,
                        // error from dbuse
                                eDbSqlExec,
                        // error from dbsqlexec
                                eDbSet,
                        // error from one of the dbset*
routines
                                eDbNextRow,
                        // error from dbnextrow
                                eWrongRowCount,
                // more or less rows returned than expected
                                eWrongNumCols,
                // more or less columns returned than
expected
                                eDbResults,
                        // error from dbresults
                                eDbRpcExec,
                        // error from dbrpcexec
                                eDbSetMaxProcs,
                // error from dbsetmaxprocs
                                eDbProcHandler
                // error from either dbprocerrhandle or
dbprocmsghandle
                        };

                        CDBLIBERR(ACTION eAction, int
severity = 0, int dberror = 0, int oserr = 0)
                        {
                                m_eAction = eAction;
                                m_severity = severity;
                                m_dberror = dberror;
                                m_oserr = oserr;

                                m_dberrstr = NULL;
                                m_oserrstr = NULL;
                        };

                        ~CDBLIBERR()
                        {
                                delete [] m_dberrstr;
                                delete [] m_oserrstr;
                        };

                        ACTION    m_eAction;
                        int                     m_severity;
                        int                     m_dberror;
                        int                     m_oserr;
                        char   *m_dberrstr;
                        char   *m_oserrstr;

                        int ErrorType() {return
ERR_TYPE_DBLIB;};
                        int ErrorNum() {return
m_dberror;};
                        char *ErrorText() {return
m_dberrstr;};

};

class CTPCC_DBLIB_ERR : public CBaseErr
{
        public:
                        enum CTPCC_DBLIB_ERRS
                        {
                                ERR_WRONG_SP_VERSION =
1,      // "Wrong version of stored procs on
database server"
                                ERR_INVALID_CUST,
                        // "Invalid Customer id,name."
                                ERR_NO_SUCH_ORDER,
                        // "No orders found for
customer."
                                ERR_RETRIED_TRANS,
                        // "Retries before transaction
succeeded."
                        };

                        CTPCC_DBLIB_ERR( int iErr ) {
m_errno = iErr; m_iTryCount = 0; };

                        CTPCC_DBLIB_ERR( int iErr, int
iTryCount ) { m_errno = iErr; m_iTryCount =
iTryCount; };

                        int                     m_errno;
                        int                     m_iTryCount;

                        int ErrorType() {return
ERR_TYPE_TPCC_DBLIB;};
                        int ErrorNum() {return m_errno;};

                        char *ErrorText();
};

class DllDecl CTPCC_DBLIB : public CTPCC_BASE
{
        private:
                        // declare variables and private
functions here...
                        PDBPROCESS              m_dbproc;
                        CDBLIBERR *m_DbLibErr;
        // not allocated until needed (maybe never)
                        CSQLERR                 *m_SqlErr;
                                // not allocated until
needed (maybe never)
                        int
        m_MaxRetries;                   // retry
count on deadlock

                        void DiscardNextRows(int
iExpectedCount);
                        void DiscardNextResults(int
iExpectedCount);
                        void ThrowError(
CDBLIBERR::ACTION eAction );
                        void ResetError();

                        union
                        {
                                NEW_ORDER_DATA
        NewOrder;
                                PAYMENT_DATA
        Payment;
                                DELIVERY_DATA
        Delivery;
                                STOCK_LEVEL_DATA
        StockLevel;
                                ORDER_STATUS_DATA
        OrderStatus;
                        }
        m_txn;

        public:
                        CTPCC_DBLIB(LPCSTR szServer,
LPCSTR szUser, LPCSTR szPassword, LPCSTR szHost,
LPCSTR szDatabase );
                        ~CTPCC_DBLIB(void);

                        inline PNEW_ORDER_DATA
        BuffAddr_NewOrder()             { return
&m_txn.NewOrder;    };
                        inline PPAYMENT_DATA
        BuffAddr_Payment()              { return
&m_txn.Payment;     };
                        inline PDELIVERY_DATA
        BuffAddr_Delivery()             { return
&m_txn.Delivery;    };
                        inline PSTOCK_LEVEL_DATA
        BuffAddr_StockLevel()           { return
&m_txn.StockLevel;  };
                        inline PORDER_STATUS_DATA
        BuffAddr_OrderStatus()          { return
&m_txn.OrderStatus; };

                        void NewOrder                   ();
                        void Payment                    ();
                        void Delivery                   ();
                        void StockLevel                 ();
                        void OrderStatus    ();


                        // these are public because they
must be called from the dblib err_handler and
msg_hangler
                        // outside of the class
                        void SetDbLibError(int severity,
int dberr, int oserr, LPCSTR dberrstr, LPCSTR
oserrstr);
                        void SetSqlError( int msgno, int
msgstate, int severity, LPCSTR msgtext );

};

extern "C" DllDecl CTPCC_DBLIB* CTPCC_DBLIB_new
                ( LPCSTR szServer, LPCSTR szUser, LPCSTR
szPassword, LPCSTR szHost, LPCSTR szDatabase );

typedef CTPCC_DBLIB* (TYPE_CTPCC_DBLIB)(LPCSTR,
LPCSTR, LPCSTR, LPCSTR, LPCSTR);
```

tpcc_odbc.cpp

```
/*      FILE:                   TPCC_ODBC.CPP
 *                                      Microsoft
TPC-C Kit Ver. 4.20.000
```


©2005 Hewlett-Packard Company. All rights reserved.

```
 *                                       Copyright
Microsoft, 1999
 *              All Rights Reserved
 *
 *                                       Version
4.10.000 audited by Richard Gimarc, Performance
Metrics, 3/17/99
 *
 *        PURPOSE:  Implements ODBC calls for TPC-C
txns.
 *        Contact:  Charles Levine
(clevine@microsoft.com)
 *
 *  Change history:
 *                    4.20.000 - updated rev number to
match kit
 *                    4.10.001 - not deleting error
class in catch handler on deadlock retry;
 *                                                not a
functional bug, but a memory leak
 */

#include <windows.h>
#include <stdio.h>
#include <assert.h>

#define DBNTWIN32
#include <sqltypes.h>
#include <sql.h>
#include <sqlext.h>
#include <odbcss.h>

#ifdef ICECAP
#include <icapexp.h>
#endif

// need to declare functions for export
#define DllDecl  __declspec( dllexport )

#include "..\..\common\src\error.h"
#include "..\..\common\src\trans.h"
#include "..\..\common\src\txn_base.h"
#include "tpcc_odbc.h"

// version string; must match return value from
tpcc_version stored proc
const char          sVersion[] = "4.10.000";

const iMaxRetries = 10;                 // how many
retries on deadlock

const int iErrOleDbProvider = 7312;
const char sErrTimeoutExpired[] = "Timeout expired";

static SQLHENV henv = SQL_NULL_HENV;
                    // ODBC environment handle

BOOL APIENTRY DllMain(HMODULE hModule, DWORD
ul_reason_for_call, LPVOID lpReserved)
{
          switch( ul_reason_for_call )
          {
                    case DLL_PROCESS_ATTACH:
```

```
          DisableThreadLibraryCalls(hModule);
                                        if (
SQLAllocHandleStd(SQL_HANDLE_ENV, SQL_NULL_HANDLE,
&henv) != SQL_SUCCESS )
                                                  return FALSE;
                                        break;

                    case DLL_PROCESS_DETACH:
                                        if (henv != NULL)

          SQLFreeEnv(henv);
                                        break;

                    default:
                                        /* nothing */;
          }
          return TRUE;
}

/* FUNCTION: CTPCC_ODBC_ERR::ErrorText
 *
 */

char* CTPCC_ODBC_ERR::ErrorText(void)
{
          int i;

          static SERRORMSG errorMsgs[] =
          {
                    { ERR_WRONG_SP_VERSION,
          "Wrong version of stored procs on database
server"   },
                    { ERR_INVALID_CUST,
          "Invalid Customer id,name."
                                                  },
                    { ERR_NO_SUCH_ORDER,
          "No orders found for customer."
                                                  },
                    { ERR_RETRIED_TRANS,
          "Retries before transaction succeeded."
                                        },
                    { 0,
                                        ""



          }
          };

          static char szNotFound[] = "Unknown error
number.";

          for(i=0; errorMsgs[i].szMsg[0]; i++)
          {
                    if ( m_errno ==
errorMsgs[i].iError )
                                        break;
          }
          if ( !errorMsgs[i].szMsg[0] )
                    return szNotFound;
          else
                    return errorMsgs[i].szMsg;
}
```

```
// wrapper routine for class constructor
__declspec(dllexport) CTPCC_ODBC* CTPCC_ODBC_new(
          LPCSTR szServer,              // name of
SQL server
          LPCSTR szUser,                          //
user name for login
          LPCSTR szPassword,            // password
for login
          LPCSTR szHost,                          //
not used
          LPCSTR szDatabase )           // name of
database to use
{
          return new CTPCC_ODBC( szServer, szUser,
szPassword, szHost, szDatabase );
}


CTPCC_ODBC::CTPCC_ODBC (
          LPCSTR szServer,
          // name of SQL server
          LPCSTR szUser,
                    // user name for login
          LPCSTR szPassword,
          // password for login
          LPCSTR szHost,
                    // not used
          LPCSTR szDatabase
          // name of database to use
          )
{
          RETCODE             rc;

          // initialization
          m_hdbc = SQL_NULL_HDBC;
          m_hstmt = SQL_NULL_HSTMT;

          m_hstmtNewOrder = SQL_NULL_HSTMT;
          m_hstmtPayment = SQL_NULL_HSTMT;
          m_hstmtDelivery = SQL_NULL_HSTMT;
          m_hstmtOrderStatus = SQL_NULL_HSTMT;
          m_hstmtStockLevel = SQL_NULL_HSTMT;

          m_descNewOrderCols1 = SQL_NULL_HDESC;
          m_descNewOrderCols2 = SQL_NULL_HDESC;
          m_descOrderStatusCols1 = SQL_NULL_HDESC;
          m_descOrderStatusCols2 = SQL_NULL_HDESC;


          if ( SQLAllocHandle(SQL_HANDLE_DBC, henv,
&m_hdbc) != SQL_SUCCESS )

          ThrowError(CODBCERR::eAllocHandle);

          if ( SQLSetConnectOption(m_hdbc,
SQL_PACKET_SIZE, 4096) != SQL_SUCCESS )

          ThrowError(CODBCERR::eConnOption);

          {
                    char
          szConnectStr[256];
```


©2005 Hewlett-Packard Company. All rights reserved.

```
                    char
          szOutStr[1024];
                    SQLSMALLINT
          iOutStrLen;

                    sprintf( szConnectStr,
"DRIVER=SQL
Server;SERVER=%s;UID=%s;PWD=%s;DATABASE=%s",
                              szServer, szUser,
szPassword, szDatabase );

                    rc = SQLDriverConnect(m_hdbc,
NULL, (SQLCHAR*)szConnectStr, sizeof(szConnectStr),
                              (SQLCHAR*)szOutStr,
sizeof(szOutStr), &iOutStrLen, SQL_DRIVER_NOPROMPT );

                    if (rc != SQL_SUCCESS && rc !=
SQL_SUCCESS_WITH_INFO)

          ThrowError(CODBCERR::eConnect);
          }

          if (SQLAllocHandle(SQL_HANDLE_STMT, m_hdbc,
&m_hstmt) != SQL_SUCCESS)

          ThrowError(CODBCERR::eAllocHandle);

          {
                    char                buffer[128];

                    // set some options affecting
connection behavior
                    strcpy(buffer, "set nocount on
set XACT_ABORT ON");
                    rc = SQLExecDirect(m_hstmt,
(unsigned char *)buffer, SQL_NTS);
                    if (rc != SQL_SUCCESS && rc !=
SQL_SUCCESS_WITH_INFO)

          ThrowError(CODBCERR::eExecDirect);

                    // verify that version of stored
procs on server is correct
                    char db_sp_version[10];
                    strcpy(buffer, "{call
tpcc_version}");
                    rc = SQLExecDirect(m_hstmt,
(unsigned char *)buffer, SQL_NTS);
                    if (rc != SQL_SUCCESS && rc !=
SQL_SUCCESS_WITH_INFO)

          ThrowError(CODBCERR::eExecDirect);
                    if ( SQLBindCol(m_hstmt, 1,
SQL_C_CHAR, &db_sp_version, sizeof(db_sp_version),
NULL) != SQL_SUCCESS )

          ThrowError(CODBCERR::eBindCol);
                    if ( SQLFetch(m_hstmt) ==
SQL_ERROR )

          ThrowError(CODBCERR::eFetch);
                    if
(strcmp(db_sp_version,sVersion))
                              throw new
CTPCC_ODBC_ERR( CTPCC_ODBC_ERR::ERR_WRONG_SP_VERSION
);

                    SQLFreeHandle(SQL_HANDLE_STMT,
m_hstmt);
          }

          // Bind parameters for each of the
transactions
          InitNewOrderParams();
          InitPaymentParams();
          InitOrderStatusParams();
          InitDeliveryParams();
          InitStockLevelParams();
}

CTPCC_ODBC::~CTPCC_ODBC( void )
{
          // note: descriptors are automatically
released when the connection is dropped
          SQLFreeHandle(SQL_HANDLE_STMT,
m_hstmtNewOrder);
          SQLFreeHandle(SQL_HANDLE_STMT,
m_hstmtPayment);
          SQLFreeHandle(SQL_HANDLE_STMT,
m_hstmtDelivery);
          SQLFreeHandle(SQL_HANDLE_STMT,
m_hstmtOrderStatus);
          SQLFreeHandle(SQL_HANDLE_STMT,
m_hstmtStockLevel);

          SQLDisconnect(m_hdbc);
          SQLFreeHandle(SQL_HANDLE_DBC, m_hdbc);
}

void CTPCC_ODBC::ThrowError( CODBCERR::ACTION eAction
)
{
          RETCODE             rc;
          SDWORD              lNativeError;
          char                szState[6];
          char
          szMsg[SQL_MAX_MESSAGE_LENGTH];
          char
          szTmp[6*SQL_MAX_MESSAGE_LENGTH];
          CODBCERR   *pODBCErr;
          // not allocated until needed (maybe never)

          pODBCErr = new CODBCERR();

          pODBCErr->m_NativeError = 0;
          pODBCErr->m_eAction = eAction;
          pODBCErr->m_bDeadLock = FALSE;

          szTmp[0] = 0;
          while (TRUE)
          {
                    rc = SQLError(henv, m_hdbc,
m_hstmt, (BYTE *)&szState, &lNativeError,

(BYTE *)&szMsg, sizeof(szMsg), NULL);
                    if (rc == SQL_NO_DATA)
                              break;

                    // check for deadlock
                    if (lNativeError == 1205 ||
(lNativeError == iErrOleDbProvider &&
                              strstr(szMsg,
sErrTimeoutExpired) != NULL))
                              pODBCErr->m_bDeadLock =
TRUE;

                    // capture the (first) database
error
                    if (pODBCErr->m_NativeError == 0
&& lNativeError != 0)
                              pODBCErr->m_NativeError
= lNativeError;

                    // quit if there isn't enough
room to concatenate error text
                    if ( (strlen(szMsg) + 2) >
(sizeof(szTmp) - strlen(szTmp)) )
                              break;

                    // include line break after first
error msg
                    if (szTmp[0] != 0)
                              strcat( szTmp, "\n");
                    strcat( szTmp, szMsg );
          }

          if (pODBCErr->m_odbcerrstr != NULL)
          {
                    delete [] pODBCErr->m_odbcerrstr;
                    pODBCErr->m_odbcerrstr = NULL;
          }

          if (strlen(szTmp) > 0)
          {
                    pODBCErr->m_odbcerrstr = new
char[ strlen(szTmp)+1 ];
                    strcpy( pODBCErr->m_odbcerrstr,
szTmp );
          }

          SQLFreeStmt(m_hstmt, SQL_CLOSE);
          throw pODBCErr;
}

void CTPCC_ODBC::InitStockLevelParams()
{
          if (   SQLAllocHandle(SQL_HANDLE_STMT,
m_hdbc, &m_hstmtStockLevel) != SQL_SUCCESS )

          ThrowError(CODBCERR::eAllocHandle);

          m_hstmt = m_hstmtStockLevel;

          int i = 0;
          if (   SQLBindParameter(m_hstmt, ++i,
SQL_PARAM_INPUT, SQL_C_SSHORT, SQL_SMALLINT, 0, 0,
&m_txn.StockLevel.w_id, 0, NULL) != SQL_SUCCESS
```


©2005 Hewlett-Packard Company. All rights reserved.

```
                    || SQLBindParameter(m_hstmt, ++i,
SQL_PARAM_INPUT, SQL_C_UTINYINT, SQL_TINYINT, 0, 0,
&m_txn.StockLevel.d_id, 0, NULL) != SQL_SUCCESS
                    || SQLBindParameter(m_hstmt, ++i,
SQL_PARAM_INPUT, SQL_C_SSHORT, SQL_SMALLINT, 0, 0,
&m_txn.StockLevel.threshold, 0, NULL) != SQL_SUCCESS
                    )
                    ThrowError(CODBCERR::eBindParam);

          if ( SQLBindCol(m_hstmt, 1, SQL_C_SLONG,
&m_txn.StockLevel.low_stock, 0, NULL) != SQL_SUCCESS
)
                    ThrowError(CODBCERR::eBindCol);
}

void CTPCC_ODBC::StockLevel()
{
          RETCODE             rc;
          int                           iTryCount =
0;

          m_hstmt = m_hstmtStockLevel;

          while (TRUE)
          {
                    try
                    {
                              rc =
SQLExecDirectW(m_hstmt, (SQLWCHAR*)L"{call
tpcc_stocklevel(?,?,?)}", SQL_NTS);
                              if (rc != SQL_SUCCESS
&& rc != SQL_SUCCESS_WITH_INFO)

          ThrowError(CODBCERR::eExecDirect);

                              if ( SQLFetch(m_hstmt)
== SQL_ERROR )

          ThrowError(CODBCERR::eFetch);

                              SQLFreeStmt(m_hstmt,
SQL_CLOSE);


          m_txn.StockLevel.exec_status_code = eOK;
                              break;
                    }
                    catch (CODBCERR *e)
                    {
                              if ((!e->m_bDeadLock)
|| (++iTryCount > iMaxRetries))
                                        throw;

                              // hit deadlock;
backoff for increasingly longer period
                              delete e;
                              Sleep(10 * iTryCount);
                    }
          }

//        if (iTryCount)
//                  throw new
CTPCC_ODBC_ERR(CTPCC_ODBC_ERR::ERR_RETRIED_TRANS,
iTryCount);
}

void CTPCC_ODBC::InitNewOrderParams()
{
          if (   SQLAllocHandle(SQL_HANDLE_STMT,
m_hdbc, &m_hstmtNewOrder) != SQL_SUCCESS
                    ||
SQLAllocHandle(SQL_HANDLE_DESC, m_hdbc,
&m_descNewOrderCols1) != SQL_SUCCESS
                    ||
SQLAllocHandle(SQL_HANDLE_DESC, m_hdbc,
&m_descNewOrderCols2) != SQL_SUCCESS
                    )

          ThrowError(CODBCERR::eAllocHandle);

          m_hstmt = m_hstmtNewOrder;

          if ( SQLSetStmtAttrW( m_hstmt,
SQL_ATTR_APP_ROW_DESC, m_descNewOrderCols1,
SQL_IS_POINTER ) != SQL_SUCCESS )

          ThrowError(CODBCERR::eSetStmtAttr);

          int i = 0;
          if (   SQLBindParameter(m_hstmt, ++i,
SQL_PARAM_INPUT, SQL_C_SSHORT, SQL_SMALLINT, 0, 0,
&m_txn.NewOrder.w_id, 0, NULL) != SQL_SUCCESS
                    || SQLBindParameter(m_hstmt, ++i,
SQL_PARAM_INPUT, SQL_C_UTINYINT, SQL_TINYINT, 0, 0,
&m_txn.NewOrder.d_id, 0, NULL) != SQL_SUCCESS
                    || SQLBindParameter(m_hstmt, ++i,
SQL_PARAM_INPUT, SQL_C_SLONG, SQL_INTEGER, 0, 0,
&m_txn.NewOrder.c_id, 0, NULL) != SQL_SUCCESS
                    || SQLBindParameter(m_hstmt, ++i,
SQL_PARAM_INPUT, SQL_C_UTINYINT, SQL_TINYINT, 0, 0,
&m_txn.NewOrder.o_ol_cnt, 0, NULL) != SQL_SUCCESS
                    || SQLBindParameter(m_hstmt, ++i,
SQL_PARAM_INPUT, SQL_C_UTINYINT, SQL_TINYINT, 0, 0,
&m_txn.NewOrder.o_all_local, 0, NULL) != SQL_SUCCESS
                    )
                    ThrowError(CODBCERR::eBindParam);

          for (int j=0; j<MAX_OL_NEW_ORDER_ITEMS;
j++)
          {
                    if (   SQLBindParameter(m_hstmt,
++i, SQL_PARAM_INPUT, SQL_C_SLONG, SQL_INTEGER, 0, 0,
&m_txn.NewOrder.OL[j].ol_i_id, 0, NULL) !=
SQL_SUCCESS
                              ||
SQLBindParameter(m_hstmt, ++i, SQL_PARAM_INPUT,
SQL_C_SSHORT, SQL_SMALLINT, 0, 0,
&m_txn.NewOrder.OL[j].ol_supply_w_id, 0, NULL) !=
SQL_SUCCESS
                              ||
SQLBindParameter(m_hstmt, ++i, SQL_PARAM_INPUT,
SQL_C_SSHORT, SQL_SMALLINT, 0, 0,
&m_txn.NewOrder.OL[j].ol_quantity, 0, NULL) !=
SQL_SUCCESS
                              )

          ThrowError(CODBCERR::eBindParam);
          }

          // set the bind offset pointer
          if ( SQLSetStmtAttrW( m_hstmt,
SQL_ATTR_ROW_BIND_OFFSET_PTR, &m_BindOffset,
SQL_IS_POINTER ) != SQL_SUCCESS )

          ThrowError(CODBCERR::eSetStmtAttr);

          i = 0;
          if (   SQLBindCol(m_hstmt, ++i, SQL_C_CHAR,
&m_txn.NewOrder.OL[0].ol_i_name,
sizeof(m_txn.NewOrder.OL[0].ol_i_name), NULL) !=
SQL_SUCCESS
                    || SQLBindCol(m_hstmt, ++i,
SQL_C_SSHORT, &m_txn.NewOrder.OL[0].ol_stock, 0,
NULL) != SQL_SUCCESS
                    || SQLBindCol(m_hstmt, ++i,
SQL_C_CHAR,   &m_txn.NewOrder.OL[0].ol_brand_generic,
sizeof(m_txn.NewOrder.OL[0].ol_brand_generic), NULL)
!= SQL_SUCCESS
                    || SQLBindCol(m_hstmt, ++i,
SQL_C_DOUBLE, &m_txn.NewOrder.OL[0].ol_i_price, 0,
NULL) != SQL_SUCCESS
                    || SQLBindCol(m_hstmt, ++i,
SQL_C_DOUBLE, &m_txn.NewOrder.OL[0].ol_amount, 0,
NULL) != SQL_SUCCESS
                    )
                    ThrowError(CODBCERR::eBindCol);

          // associate the column bindings for the
second result set
          if ( SQLSetStmtAttrW( m_hstmt,
SQL_ATTR_APP_ROW_DESC, m_descNewOrderCols2,
SQL_IS_POINTER ) != SQL_SUCCESS )

          ThrowError(CODBCERR::eSetStmtAttr);

          i = 0;
          if (   SQLBindCol(m_hstmt, ++i,
SQL_C_DOUBLE,    &m_txn.NewOrder.w_tax, 0, NULL) !=
SQL_SUCCESS
                    || SQLBindCol(m_hstmt, ++i,
SQL_C_DOUBLE,    &m_txn.NewOrder.d_tax, 0, NULL) !=
SQL_SUCCESS
                    || SQLBindCol(m_hstmt, ++i,
SQL_C_SLONG,     &m_txn.NewOrder.o_id, 0, NULL) !=
SQL_SUCCESS
                    || SQLBindCol(m_hstmt, ++i,
SQL_C_CHAR,      &m_txn.NewOrder.c_last,
sizeof(m_txn.NewOrder.c_last), NULL) != SQL_SUCCESS
                    || SQLBindCol(m_hstmt, ++i,
SQL_C_DOUBLE,    &m_txn.NewOrder.c_discount, 0, NULL)
!= SQL_SUCCESS
                    || SQLBindCol(m_hstmt, ++i,
SQL_C_CHAR,      &m_txn.NewOrder.c_credit,
sizeof(m_txn.NewOrder.c_credit), NULL) != SQL_SUCCESS
                    || SQLBindCol(m_hstmt, ++i,
SQL_C_TYPE_TIMESTAMP, &m_txn.NewOrder.o_entry_d, 0,
NULL) != SQL_SUCCESS
```


©2005 Hewlett-Packard Company. All rights reserved.

```
                    || SQLBindCol(m_hstmt, ++i,
SQL_C_SLONG,     &m_no_commit_flag, 0, NULL) !=
SQL_SUCCESS
               )
                    ThrowError(CODBCERR::eBindCol);
}

void CTPCC_ODBC::NewOrder()
{
          int
          i;
          RETCODE                                   rc;
          int
          iTryCount = 0;

                                                     //
0         1         2

                                                     //
0123456789012345678901234567890123456789
          wchar_t
          szSqlTemplate[] = L"{call
tpcc_neworder(?,?,?,?,?,"


L"?,?,?,?,?,?,?,?,?,?,?,?,?,?,?,"


L"?,?,?,?,?,?,?,?,?,?,?,?,?,?,?,"


L"?,?,?,?,?,?,?,?,?,?,?,?,?,?,?)}";

          m_hstmt = m_hstmtNewOrder;

          // associate the parameter and column
bindings for this transaction
          if ( SQLSetStmtAttrW( m_hstmt,
SQL_ATTR_APP_ROW_DESC, m_descNewOrderCols1,
SQL_IS_POINTER ) != SQL_SUCCESS )

          ThrowError(CODBCERR::eSetStmtAttr);

          // clip statement buffer based on number of
parameters
          // fixed part is 29 chars and variable part
is 6 chars per line item
          i = 29 + m_txn.NewOrder.o_ol_cnt*6;
          wcscpy( &szSqlTemplate[i], L")}" );

          // check whether any order lines are for a
remote warehouse
          m_txn.NewOrder.o_all_local = 1;
          for (i = 0; i < m_txn.NewOrder.o_ol_cnt;
i++)
          {
                    if
(m_txn.NewOrder.OL[i].ol_supply_w_id !=
m_txn.NewOrder.w_id)
                    {

          m_txn.NewOrder.o_all_local = 0;  // at
least one remote warehouse
```

```
                              break;
                    }
          }

          while (TRUE)
          {
                    try
                    {
                              m_BindOffset = 0;
                              rc =
SQLExecDirectW(m_hstmt, (SQLWCHAR*)szSqlTemplate,
SQL_NTS);
                              if (rc != SQL_SUCCESS
&& rc != SQL_SUCCESS_WITH_INFO)

          ThrowError(CODBCERR::eExecDirect);

                              // Get order line
results

          m_txn.NewOrder.total_amount = 0;
                              for (i = 0;
i<m_txn.NewOrder.o_ol_cnt; i++)
                              {
                                        // set the
bind offset value...
                                        m_BindOffset
= i * sizeof(m_txn.NewOrder.OL[0]);

                                        if (
SQLFetch(m_hstmt) == SQL_ERROR)

          ThrowError(CODBCERR::eFetch);

                                        // move to
the next resultset
                                        if (
SQLMoreResults(m_hstmt) == SQL_ERROR )

          ThrowError(CODBCERR::eMoreResults);


          m_txn.NewOrder.total_amount +=
m_txn.NewOrder.OL[i].ol_amount;
                              }

                              // associate the column
bindings for the second result set
                              if ( SQLSetStmtAttrW(
m_hstmt, SQL_ATTR_APP_ROW_DESC, m_descNewOrderCols2,
SQL_IS_POINTER ) != SQL_SUCCESS )

          ThrowError(CODBCERR::eSetStmtAttr);

                              if ( SQLFetch(m_hstmt)
== SQL_ERROR)

          ThrowError(CODBCERR::eFetch);

                              SQLFreeStmt(m_hstmt,
SQL_CLOSE);
```

```
                              if (m_no_commit_flag ==
1)
                              {

          m_txn.NewOrder.total_amount *= ((1 +
m_txn.NewOrder.w_tax + m_txn.NewOrder.d_tax) * (1 -
m_txn.NewOrder.c_discount));

          m_txn.NewOrder.exec_status_code = eOK;
                              }
                              else

          m_txn.NewOrder.exec_status_code =
eInvalidItem;

                              break;
                    }
                    catch (CODBCERR *e)
                    {
                              if ((!e->m_bDeadLock)
|| (++iTryCount > iMaxRetries))
                                        throw;

                              // hit deadlock;
backoff for increasingly longer period
                              delete e;
                              Sleep(10 * iTryCount);
                    }
          }

//        if (iTryCount)
//                  throw new
CTPCC_ODBC_ERR(CTPCC_ODBC_ERR::ERR_RETRIED_TRANS,
iTryCount);
}

void CTPCC_ODBC::InitPaymentParams()
{
          if (   SQLAllocHandle(SQL_HANDLE_STMT,
m_hdbc, &m_hstmtPayment) != SQL_SUCCESS )

          ThrowError(CODBCERR::eAllocHandle);

          m_hstmt = m_hstmtPayment;

          int i = 0;
          if (   SQLBindParameter(m_hstmt, ++i,
SQL_PARAM_INPUT, SQL_C_SSHORT, SQL_SMALLINT, 0, 0,
&m_txn.Payment.w_id, 0, NULL) != SQL_SUCCESS
                    || SQLBindParameter(m_hstmt, ++i,
SQL_PARAM_INPUT, SQL_C_SSHORT, SQL_SMALLINT, 0, 0,
&m_txn.Payment.c_w_id, 0, NULL) != SQL_SUCCESS
                    || SQLBindParameter(m_hstmt, ++i,
SQL_PARAM_INPUT, SQL_C_DOUBLE, SQL_NUMERIC, 6, 2,
&m_txn.Payment.h_amount, 0, NULL) != SQL_SUCCESS
                    || SQLBindParameter(m_hstmt, ++i,
SQL_PARAM_INPUT, SQL_C_UTINYINT, SQL_TINYINT, 0, 0,
&m_txn.Payment.d_id, 0, NULL) != SQL_SUCCESS
                    || SQLBindParameter(m_hstmt, ++i,
SQL_PARAM_INPUT, SQL_C_UTINYINT, SQL_TINYINT, 0, 0,
&m_txn.Payment.c_d_id, 0, NULL) != SQL_SUCCESS
```


©2005 Hewlett-Packard Company. All rights reserved.

```
                    || SQLBindParameter(m_hstmt, ++i,
SQL_PARAM_INPUT, SQL_C_SLONG, SQL_INTEGER, 0, 0,
&m_txn.Payment.c_id, 0, NULL) != SQL_SUCCESS
                    || SQLBindParameter(m_hstmt, ++i,
SQL_PARAM_INPUT, SQL_C_CHAR, SQL_CHAR,
sizeof(m_txn.Payment.c_last), 0,
&m_txn.Payment.c_last, sizeof(m_txn.Payment.c_last),
NULL) != SQL_SUCCESS
                    )
                    ThrowError(CODBCERR::eBindParam);

          i = 0;
          if (   SQLBindCol(m_hstmt, ++i,
SQL_C_SLONG,      &m_txn.Payment.c_id,             0,
NULL) != SQL_SUCCESS
                    || SQLBindCol(m_hstmt, ++i,
SQL_C_CHAR,       &m_txn.Payment.c_last,
          sizeof(m_txn.Payment.c_last), NULL) !=
SQL_SUCCESS
                    || SQLBindCol(m_hstmt, ++i,
SQL_C_TYPE_TIMESTAMP, &m_txn.Payment.h_date,
          0, NULL) != SQL_SUCCESS
                    || SQLBindCol(m_hstmt, ++i,
SQL_C_CHAR,       &m_txn.Payment.w_street_1,
          sizeof(m_txn.Payment.w_street_1), NULL) !=
SQL_SUCCESS
                    || SQLBindCol(m_hstmt, ++i,
SQL_C_CHAR,       &m_txn.Payment.w_street_2,
          sizeof(m_txn.Payment.w_street_2), NULL) !=
SQL_SUCCESS
                    || SQLBindCol(m_hstmt, ++i,
SQL_C_CHAR,       &m_txn.Payment.w_city,
          sizeof(m_txn.Payment.w_city), NULL) !=
SQL_SUCCESS
                    || SQLBindCol(m_hstmt, ++i,
SQL_C_CHAR,       &m_txn.Payment.w_state,
          sizeof(m_txn.Payment.w_state), NULL) !=
SQL_SUCCESS
                    || SQLBindCol(m_hstmt, ++i,
SQL_C_CHAR,       &m_txn.Payment.w_zip,
          sizeof(m_txn.Payment.w_zip), NULL) !=
SQL_SUCCESS
                    || SQLBindCol(m_hstmt, ++i,
SQL_C_CHAR,       &m_txn.Payment.d_street_1,
          sizeof(m_txn.Payment.d_street_1), NULL) !=
SQL_SUCCESS
                    || SQLBindCol(m_hstmt, ++i,
SQL_C_CHAR,       &m_txn.Payment.d_street_2,
          sizeof(m_txn.Payment.d_street_2), NULL) !=
SQL_SUCCESS
                    || SQLBindCol(m_hstmt, ++i,
SQL_C_CHAR,       &m_txn.Payment.d_city,
          sizeof(m_txn.Payment.d_city), NULL) !=
SQL_SUCCESS
                    || SQLBindCol(m_hstmt, ++i,
SQL_C_CHAR,       &m_txn.Payment.d_state,
          sizeof(m_txn.Payment.d_state), NULL) !=
SQL_SUCCESS
                    || SQLBindCol(m_hstmt, ++i,
SQL_C_CHAR,       &m_txn.Payment.d_zip,
          sizeof(m_txn.Payment.d_zip), NULL) !=
SQL_SUCCESS
                    || SQLBindCol(m_hstmt, ++i,
SQL_C_CHAR,       &m_txn.Payment.c_first,
          sizeof(m_txn.Payment.c_first), NULL) !=
SQL_SUCCESS
                    || SQLBindCol(m_hstmt, ++i,
SQL_C_CHAR,       &m_txn.Payment.c_middle,
          sizeof(m_txn.Payment.c_middle), NULL) !=
SQL_SUCCESS
                    || SQLBindCol(m_hstmt, ++i,
SQL_C_CHAR,       &m_txn.Payment.c_street_1,
          sizeof(m_txn.Payment.c_street_1), NULL) !=
SQL_SUCCESS
                    || SQLBindCol(m_hstmt, ++i,
SQL_C_CHAR,       &m_txn.Payment.c_street_2,
          sizeof(m_txn.Payment.c_street_2), NULL) !=
SQL_SUCCESS
                    || SQLBindCol(m_hstmt, ++i,
SQL_C_CHAR,       &m_txn.Payment.c_city,
          sizeof(m_txn.Payment.c_city), NULL) !=
SQL_SUCCESS
                    || SQLBindCol(m_hstmt, ++i,
SQL_C_CHAR,       &m_txn.Payment.c_state,
          sizeof(m_txn.Payment.c_state), NULL) !=
SQL_SUCCESS
                    || SQLBindCol(m_hstmt, ++i,
SQL_C_CHAR,       &m_txn.Payment.c_zip,
          sizeof(m_txn.Payment.c_zip), NULL) !=
SQL_SUCCESS
                    || SQLBindCol(m_hstmt, ++i,
SQL_C_CHAR,       &m_txn.Payment.c_phone,
          sizeof(m_txn.Payment.c_phone), NULL) !=
SQL_SUCCESS
                    || SQLBindCol(m_hstmt, ++i,
SQL_C_TYPE_TIMESTAMP, &m_txn.Payment.c_since,
          0, NULL) != SQL_SUCCESS
                    || SQLBindCol(m_hstmt, ++i,
SQL_C_CHAR,       &m_txn.Payment.c_credit,
          sizeof(m_txn.Payment.c_credit), NULL) !=
SQL_SUCCESS
                    || SQLBindCol(m_hstmt, ++i,
SQL_C_DOUBLE,     &m_txn.Payment.c_credit_lim,0, NULL)
!= SQL_SUCCESS
                    || SQLBindCol(m_hstmt, ++i,
SQL_C_DOUBLE,     &m_txn.Payment.c_discount,       0,
NULL) != SQL_SUCCESS
                    || SQLBindCol(m_hstmt, ++i,
SQL_C_DOUBLE,     &m_txn.Payment.c_balance,        0,
NULL) != SQL_SUCCESS
                    || SQLBindCol(m_hstmt, ++i,
SQL_C_CHAR,       &m_txn.Payment.c_data,
          sizeof(m_txn.Payment.c_data), NULL) !=
SQL_SUCCESS
                    )
                    ThrowError(CODBCERR::eBindCol);
}

void CTPCC_ODBC::Payment()
{
          RETCODE              rc;
          int                           iTryCount =
0;

          m_hstmt = m_hstmtPayment;

          if (m_txn.Payment.c_id != 0)
                    m_txn.Payment.c_last[0] = 0;

          while (TRUE)
          {
                    try
                    {
                              rc =
SQLExecDirectW(m_hstmt, (SQLWCHAR*)L"{call
tpcc_payment(?,?,?,?,?,?,?)}", SQL_NTS);
                              if (rc != SQL_SUCCESS
&& rc != SQL_SUCCESS_WITH_INFO)

          ThrowError(CODBCERR::eExecDirect);

                              if ( SQLFetch(m_hstmt)
== SQL_ERROR)

          ThrowError(CODBCERR::eFetch);

                              SQLFreeStmt(m_hstmt,
SQL_CLOSE);

                              if (m_txn.Payment.c_id
== 0)
                                        throw new
CTPCC_ODBC_ERR( CTPCC_ODBC_ERR::ERR_INVALID_CUST );
                              else

          m_txn.Payment.exec_status_code = eOK;

                              break;
                    }
                    catch (CODBCERR *e)
                    {
                              if ((!e->m_bDeadLock)
|| (++iTryCount > iMaxRetries))
                                        throw;

                              // hit deadlock;
backoff for increasingly longer period
                              delete e;
                              Sleep(10 * iTryCount);
                    }
          }

//        if (iTryCount)
//                  throw new
CTPCC_ODBC_ERR(CTPCC_ODBC_ERR::ERR_RETRIED_TRANS,
iTryCount);
}

void CTPCC_ODBC::InitOrderStatusParams()
{
          if (   SQLAllocHandle(SQL_HANDLE_STMT,
m_hdbc, &m_hstmtOrderStatus) != SQL_SUCCESS
                    ||
SQLAllocHandle(SQL_HANDLE_DESC, m_hdbc,
&m_descOrderStatusCols1) != SQL_SUCCESS
                    ||
SQLAllocHandle(SQL_HANDLE_DESC, m_hdbc,
&m_descOrderStatusCols2) != SQL_SUCCESS
```


©2005 Hewlett-Packard Company. All rights reserved.

```
                    )

          ThrowError(CODBCERR::eAllocHandle);

          m_hstmt = m_hstmtOrderStatus;

          if (   SQLSetStmtAttrW( m_hstmt,
SQL_ATTR_APP_ROW_DESC, m_descOrderStatusCols1,
SQL_IS_POINTER ) != SQL_SUCCESS )

          ThrowError(CODBCERR::eSetStmtAttr);

          int i = 0;
          if (   SQLBindParameter(m_hstmt, ++i,
SQL_PARAM_INPUT, SQL_C_SSHORT, SQL_SMALLINT, 0, 0,
&m_txn.OrderStatus.w_id, 0, NULL) != SQL_SUCCESS
                    || SQLBindParameter(m_hstmt, ++i,
SQL_PARAM_INPUT, SQL_C_UTINYINT, SQL_TINYINT, 0, 0,
&m_txn.OrderStatus.d_id, 0, NULL) != SQL_SUCCESS
                    || SQLBindParameter(m_hstmt, ++i,
SQL_PARAM_INPUT, SQL_C_SLONG, SQL_INTEGER, 0, 0,
&m_txn.OrderStatus.c_id, 0, NULL) != SQL_SUCCESS
                    || SQLBindParameter(m_hstmt, ++i,
SQL_PARAM_INPUT, SQL_C_CHAR, SQL_CHAR,
sizeof(m_txn.OrderStatus.c_last), 0,
&m_txn.OrderStatus.c_last,
sizeof(m_txn.OrderStatus.c_last), NULL) !=
SQL_SUCCESS
                    )
                    ThrowError(CODBCERR::eBindParam);

          // configure block cursor
          if (   SQLSetStmtAttrW(m_hstmt,
SQL_ATTR_ROW_BIND_TYPE,
(SQLPOINTER)sizeof(m_txn.OrderStatus.OL[0]), 0) !=
SQL_SUCCESS
                    || SQLSetStmtAttrW(m_hstmt,
SQL_ATTR_ROWS_FETCHED_PTR, &m_RowsFetched, 0) !=
SQL_SUCCESS
                    )

          ThrowError(CODBCERR::eSetStmtAttr);

          i = 0;
          if (   SQLBindCol(m_hstmt, ++i,
SQL_C_SSHORT,
&m_txn.OrderStatus.OL[0].ol_supply_w_id, 0, NULL) !=
SQL_SUCCESS
                    || SQLBindCol(m_hstmt, ++i,
SQL_C_SLONG, &m_txn.OrderStatus.OL[0].ol_i_id, 0,
NULL) != SQL_SUCCESS
                    || SQLBindCol(m_hstmt, ++i,
SQL_C_SSHORT, &m_txn.OrderStatus.OL[0].ol_quantity,
0, NULL) != SQL_SUCCESS
                    || SQLBindCol(m_hstmt, ++i,
SQL_C_DOUBLE, &m_txn.OrderStatus.OL[0].ol_amount, 0,
NULL) != SQL_SUCCESS
                    || SQLBindCol(m_hstmt, ++i,
SQL_C_TYPE_TIMESTAMP,
&m_txn.OrderStatus.OL[0].ol_delivery_d, 0, NULL) !=
SQL_SUCCESS
                    )
                    ThrowError(CODBCERR::eBindCol);

          if ( SQLSetStmtAttrW( m_hstmt,
SQL_ATTR_APP_ROW_DESC, m_descOrderStatusCols2,
SQL_IS_POINTER ) != SQL_SUCCESS )

          ThrowError(CODBCERR::eSetStmtAttr);

          i = 0;
          if (   SQLBindCol(m_hstmt, ++i,
SQL_C_SLONG, &m_txn.OrderStatus.c_id, 0, NULL) !=
SQL_SUCCESS
                    || SQLBindCol(m_hstmt, ++i,
SQL_C_CHAR, &m_txn.OrderStatus.c_last,
sizeof(m_txn.OrderStatus.c_last), NULL) !=
SQL_SUCCESS
                    || SQLBindCol(m_hstmt, ++i,
SQL_C_CHAR, &m_txn.OrderStatus.c_first,
sizeof(m_txn.OrderStatus.c_first), NULL) !=
SQL_SUCCESS
                    || SQLBindCol(m_hstmt, ++i,
SQL_C_CHAR, &m_txn.OrderStatus.c_middle,
sizeof(m_txn.OrderStatus.c_middle), NULL) !=
SQL_SUCCESS
                    || SQLBindCol(m_hstmt, ++i,
SQL_C_TYPE_TIMESTAMP, &m_txn.OrderStatus.o_entry_d,
0, NULL) != SQL_SUCCESS
                    || SQLBindCol(m_hstmt, ++i,
SQL_C_SSHORT, &m_txn.OrderStatus.o_carrier_id, 0,
NULL) != SQL_SUCCESS
                    || SQLBindCol(m_hstmt, ++i,
SQL_C_DOUBLE, &m_txn.OrderStatus.c_balance, 0, NULL)
!= SQL_SUCCESS
                    || SQLBindCol(m_hstmt, ++i,
SQL_C_SLONG, &m_txn.OrderStatus.o_id, 0, NULL) !=
SQL_SUCCESS
                    )
                    ThrowError(CODBCERR::eBindCol);
}

void CTPCC_ODBC::OrderStatus()
{
          int
                    iTryCount = 0;
          RETCODE
          rc;

          m_hstmt = m_hstmtOrderStatus;

          if ( SQLSetStmtAttrW( m_hstmt,
SQL_ATTR_APP_ROW_DESC, m_descOrderStatusCols1,
SQL_IS_POINTER ) != SQL_SUCCESS )

          ThrowError(CODBCERR::eSetStmtAttr);

          if (m_txn.OrderStatus.c_id != 0)
                    m_txn.OrderStatus.c_last[0] = 0;

          while (TRUE)
          {
                    try
                    {
                              // configure block
cursor
                              if (
SQLSetStmtAttrW(m_hstmt, SQL_ATTR_ROW_ARRAY_SIZE,
(SQLPOINTER)1, 0) != SQL_SUCCESS )

          ThrowError(CODBCERR::eSetStmtAttr);

                              rc =
SQLExecDirectW(m_hstmt, (SQLWCHAR*)L"{call
tpcc_orderstatus(?,?,?,?)}", SQL_NTS);
                              if ( ((rc ==
SQL_SUCCESS_WITH_INFO) && (m_RowsFetched != 0)) ||
(rc == SQL_ERROR) )

          ThrowError(CODBCERR::eExecDirect);

                              // configure block
cursor
                              if (
SQLSetStmtAttrW(m_hstmt, SQL_ATTR_ROW_ARRAY_SIZE,
(SQLPOINTER)MAX_OL_ORDER_STATUS_ITEMS, 0) !=
SQL_SUCCESS )

          ThrowError(CODBCERR::eSetStmtAttr);

                              rc = SQLFetchScroll(
m_hstmt, SQL_FETCH_NEXT, 0 );
                              if ( ((rc ==
SQL_SUCCESS_WITH_INFO) && (m_RowsFetched != 0)) ||
(rc == SQL_ERROR) )

          ThrowError(CODBCERR::eFetchScroll);


          m_txn.OrderStatus.o_ol_cnt =
(short)m_RowsFetched;

                              if
(m_txn.OrderStatus.o_ol_cnt != 0)
                              {
                                        if (
SQLSetStmtAttrW( m_hstmt, SQL_ATTR_APP_ROW_DESC,
m_descOrderStatusCols2, SQL_IS_POINTER ) !=
SQL_SUCCESS )

          ThrowError(CODBCERR::eSetStmtAttr);

                                        if (
SQLMoreResults(m_hstmt) == SQL_ERROR )

          ThrowError(CODBCERR::eMoreResults);

                                        if ( (rc =
SQLFetch(m_hstmt)) == SQL_ERROR)

          ThrowError(CODBCERR::eFetch);
                              }

                              SQLFreeStmt(m_hstmt,
SQL_CLOSE);
```


©2005 Hewlett-Packard Company. All rights reserved.

```
                                if
(m_txn.OrderStatus.o_ol_cnt == 0)
                                        throw new
CTPCC_ODBC_ERR( CTPCC_ODBC_ERR::ERR_NO_SUCH_ORDER );
                                else if
(m_txn.OrderStatus.c_id == 0 &&
m_txn.OrderStatus.c_last[0] == 0)
                                        throw new
CTPCC_ODBC_ERR( CTPCC_ODBC_ERR::ERR_INVALID_CUST );
                                else

          m_txn.OrderStatus.exec_status_code = eOK;

                                break;
                        }
                        catch (CODBCERR *e)
                        {
                                if ((!e->m_bDeadLock)
|| (++iTryCount > iMaxRetries))
                                        throw;

                                // hit deadlock;
backoff for increasingly longer period
                                delete e;
                                Sleep(10 * iTryCount);
                        }
          }

//        if (iTryCount)
//                      throw new
CTPCC_ODBC_ERR(CTPCC_ODBC_ERR::ERR_RETRIED_TRANS,
iTryCount);
}

void CTPCC_ODBC::InitDeliveryParams()
{
          if (   SQLAllocHandle(SQL_HANDLE_STMT,
m_hdbc, &m_hstmtDelivery) != SQL_SUCCESS )

          ThrowError(CODBCERR::eAllocHandle);

          m_hstmt = m_hstmtDelivery;

          int i = 0;
          if (   SQLBindParameter(m_hstmt, ++i,
SQL_PARAM_INPUT, SQL_C_SSHORT, SQL_SMALLINT, 0, 0,
&m_txn.Delivery.w_id, 0, NULL) != SQL_SUCCESS
                      || SQLBindParameter(m_hstmt, ++i,
SQL_PARAM_INPUT, SQL_C_SSHORT, SQL_SMALLINT, 0, 0,
&m_txn.Delivery.o_carrier_id, 0, NULL) != SQL_SUCCESS
                      )
                      ThrowError(CODBCERR::eBindParam);

          for (i=0;i<10;i++)
          {
                      if ( SQLBindCol(m_hstmt,
(UWORD)(i+1), SQL_C_SLONG, &m_txn.Delivery.o_id[i],
0, NULL) != SQL_SUCCESS )

          ThrowError(CODBCERR::eBindCol);
          }
}

void CTPCC_ODBC::Delivery()
{
          RETCODE             rc;
          int                           iTryCount =
0;

          m_hstmt = m_hstmtDelivery;

          while (TRUE)
          {
                    try
                    {
                                rc =
SQLExecDirectW(m_hstmt, (SQLWCHAR*)L"{call
tpcc_delivery(?,?)}", SQL_NTS);
                                if (rc != SQL_SUCCESS
&& rc != SQL_SUCCESS_WITH_INFO)

          ThrowError(CODBCERR::eExecDirect);

                                if ( SQLFetch(m_hstmt)
== SQL_ERROR )

          ThrowError(CODBCERR::eFetch);

                                SQLFreeStmt(m_hstmt,
SQL_CLOSE);

          m_txn.Delivery.exec_status_code = eOK;
                                break;
                    }
                    catch (CODBCERR *e)
                    {
                                if ((!e->m_bDeadLock)
|| (++iTryCount > iMaxRetries))
                                          throw;

                                // hit deadlock;
backoff for increasingly longer period
                                delete e;
                                Sleep(10 * iTryCount);
                    }
          }

//        if (iTryCount)
//                    throw new
CTPCC_ODBC_ERR(CTPCC_ODBC_ERR::ERR_RETRIED_TRANS,
iTryCount);
}
```

tpcc_odbc.h

```
/*        FILE:               TPCC_ODBC.H
 *                                    Microsoft
TPC-C Kit Ver. 4.20.000
 *                                    Copyright
Microsoft, 1999
 *              All Rights Reserved
 *
 *                                    Version
4.10.000 audited by Richard Gimarc, Performance
Metrics, 3/17/99
 *
 *        PURPOSE:  Header file for TPC-C txn class
implementation.
 *
 *  Change history:
 *                  4.20.000 - updated rev number to
match kit
 */
#pragma once

// need to declare functions for import, unless
define has already been created
// by the DLL's .cpp module for export.
#ifndef DllDecl
#define DllDecl  __declspec( dllimport )
#endif

class CODBCERR : public CBaseErr
{
          public:
                    enum ACTION
                    {
                              eNone,
                              eUnknown,
                              eAllocConn,
                    // error from SQLAllocConnect
                              eAllocHandle,
          // error from SQLAllocHandle
                              eConnOption,
          // error from SQLSetConnectOption
                              eConnect,
          // error from SQLConnect
                              eAllocStmt,
                    // error from SQLAllocStmt
                              eExecDirect,
          // error from SQLExecDirect
                              eBindParam,
                    // error from SQLBindParameter
                              eBindCol,
          // error from SQLBindCol
                              eFetch,
                    // error from SQLFetch
                              eFetchScroll,
          // error from SQLFetchScroll
                              eMoreResults,
          // error from SQLMoreResults
                              ePrepare,
          // error from SQLPrepare
                              eExecute,
          // error from SQLExecute
                              eSetEnvAttr,
          // error from SQLSetEnvAttr
                              eSetStmtAttr
          // error from SQLSetStmtAttr
                    };

                    CODBCERR(void)
                    {
                              m_eAction = eNone;
                              m_NativeError = 0;
```


©2005 Hewlett-Packard Company. All rights reserved.

```
                                m_bDeadLock = FALSE;
                                m_odbcerrstr = NULL;
                        };

                        ~CODBCERR()
                        {
                                if (m_odbcerrstr !=
NULL)
                                        delete []
m_odbcerrstr;
                        };

                        ACTION    m_eAction;
                        int
          m_NativeError;
                        BOOL      m_bDeadLock;
                        char   *m_odbcerrstr;

                        int ErrorType() {return
ERR_TYPE_ODBC;};
                        int ErrorNum() {return
m_NativeError;};
                        char *ErrorText() {return
m_odbcerrstr;};

};

class CTPCC_ODBC_ERR : public CBaseErr
{
          public:
                        enum TPCC_ODBC_ERRS
                        {
                                ERR_WRONG_SP_VERSION =
1,        // "Wrong version of stored procs on
database server"
                                ERR_INVALID_CUST,
                        // "Invalid Customer id,name."
                                ERR_NO_SUCH_ORDER,
                        // "No orders found for
customer."
                                ERR_RETRIED_TRANS,
                        // "Retries before transaction
succeeded."
                        };

                        CTPCC_ODBC_ERR( int iErr ) {
m_errno = iErr; m_iTryCount = 0; };

                        CTPCC_ODBC_ERR( int iErr, int
iTryCount ) { m_errno = iErr; m_iTryCount =
iTryCount; };

                        int                     m_errno;
                        int                     m_iTryCount;

                        int ErrorType() {return
ERR_TYPE_TPCC_ODBC;};
                        int ErrorNum() {return m_errno;};

                        char *ErrorText();
};

class DllDecl CTPCC_ODBC : public CTPCC_BASE
{
          private:
                        // declare variables and private
functions here...
                        BOOL                    m_bDeadlock;
                        // transaction was selected as
deadlock victim
                        int
          m_MaxRetries;                   // retry
count on deadlock

                        SQLHENV                 m_henv;
                                        // ODBC environment
handle
                        SQLHDBC                 m_hdbc;
                        SQLHSTMT  m_hstmt;
          // the current hstmt

                        SQLHSTMT  m_hstmtNewOrder;
                        SQLHSTMT  m_hstmtPayment;
                        SQLHSTMT  m_hstmtDelivery;
                        SQLHSTMT  m_hstmtOrderStatus;
                        SQLHSTMT  m_hstmtStockLevel;

                        SQLHDESC  m_descNewOrderCols1;
                        SQLHDESC  m_descNewOrderCols2;
                        SQLHDESC  m_descOrderStatusCols1;
                        SQLHDESC  m_descOrderStatusCols2;

                        // new-order specific fields
                        SQLUINTEGER             m_BindOffset;
                        SQLUINTEGER
          m_RowsFetched;
                        int
          m_no_commit_flag;

                        void ThrowError( CODBCERR::ACTION
eAction );

                        void InitNewOrderParams();
                        void InitPaymentParams();
                        void InitDeliveryParams();
                        void InitStockLevelParams();
                        void InitOrderStatusParams();

                        union
                        {
                                        NEW_ORDER_DATA
          NewOrder;
                                        PAYMENT_DATA
          Payment;
                                        DELIVERY_DATA
          Delivery;
                                        STOCK_LEVEL_DATA
          StockLevel;
                                        ORDER_STATUS_DATA
          OrderStatus;
                        }
          m_txn;

          public:
                        CTPCC_ODBC(LPCSTR szServer,
LPCSTR szUser, LPCSTR szPassword, LPCSTR szHost,
LPCSTR szDatabase);
                        ~CTPCC_ODBC(void);

                        inline PNEW_ORDER_DATA
          BuffAddr_NewOrder()           { return
&m_txn.NewOrder;    };
                        inline PPAYMENT_DATA
          BuffAddr_Payment()            { return
&m_txn.Payment;     };
                        inline PDELIVERY_DATA
          BuffAddr_Delivery()           { return
&m_txn.Delivery;    };
                        inline PSTOCK_LEVEL_DATA
          BuffAddr_StockLevel()         { return
&m_txn.StockLevel;  };
                        inline PORDER_STATUS_DATA
          BuffAddr_OrderStatus()        { return
&m_txn.OrderStatus; };

                        void NewOrder                   ();
                        void Payment                    ();
                        void Delivery                   ();
                        void StockLevel                 ();
                        void OrderStatus    ();

};


// wrapper routine for class constructor
extern "C" DllDecl CTPCC_ODBC* CTPCC_ODBC_new
          ( LPCSTR szServer, LPCSTR szUser, LPCSTR
szPassword, LPCSTR szHost, LPCSTR szDatabase );

typedef CTPCC_ODBC* (TYPE_CTPCC_ODBC)(LPCSTR, LPCSTR,
LPCSTR, LPCSTR, LPCSTR);
```

trans.h

```
/*        FILE:               TRANS.H
 *                                        Microsoft
TPC-C Kit Ver. 4.20.000
 *                                        Copyright
Microsoft, 1999
 *              All Rights Reserved
 *
 *                                        Version
4.10.000 audited by Richard Gimarc, Performance
Metrics, 3/17/99
 *
 *        PURPOSE:  Header file for TPC-C structure
templates.
 *
 *  Change history:
 *                      4.20.000 - updated rev number to
match kit
 */
#pragma once
```


©2005 Hewlett-Packard Company. All rights reserved.

```
// String length constants
#define SERVER_NAME_LEN            20
#define DATABASE_NAME_LEN          20
#define USER_NAME_LEN              20
#define PASSWORD_LEN               20
#define TABLE_NAME_LEN             20
#define I_DATA_LEN                 50
#define I_NAME_LEN                 24
#define BRAND_LEN                   1
#define LAST_NAME_LEN              16
#define W_NAME_LEN                 10
#define ADDRESS_LEN                20
#define STATE_LEN                   2
#define ZIP_LEN                     9
#define S_DIST_LEN                 24
#define S_DATA_LEN                 50
#define D_NAME_LEN                 10
#define FIRST_NAME_LEN             16
#define MIDDLE_NAME_LEN             2
#define PHONE_LEN                  16
#define DATETIME_LEN               30
#define CREDIT_LEN                  2
#define C_DATA_LEN                250
#define H_DATA_LEN                 24
#define DIST_INFO_LEN              24
#define MAX_OL_NEW_ORDER_ITEMS     15
#define MAX_OL_ORDER_STATUS_ITEMS  15
#define STATUS_LEN                 25
#define OL_DIST_INFO_LEN                   24

// TIMESTAMP_STRUCT is provided by the ODBC header
file sqltypes.h, but is not available
// when compiling with dblib, so redefined here.
Note: we are using the symbol "__SQLTYPES"
// (declared in sqltypes.h) as a way to determine if
TIMESTAMP_STRUCT has been declared.
#ifndef __SQLTYPES
          typedef struct
          {
                                short
          /* SQLSMALLINT */   year;
                                unsigned short      /*
SQLUSMALLINT */     month;
                                unsigned short      /*
SQLUSMALLINT */     day;
                                unsigned short      /*
SQLUSMALLINT */     hour;
                                unsigned short      /*
SQLUSMALLINT */     minute;
                                unsigned short      /*
SQLUSMALLINT */     second;
                                unsigned long       /*
SQLUINTEGER */      fraction;
          } TIMESTAMP_STRUCT;
#endif

// possible values for exec_status_code after
transaction completes
enum EXEC_STATUS
{
          eOK,                          // 0
          "Transaction commited."
```

```
          eInvalidItem,       // 1      "Item number
is not valid."
          eDeliveryFailed     // 2      "Delivery
Post Failed."
};

// transaction structures
typedef struct
{
          // input params
          short
          ol_supply_w_id;
          long
          ol_i_id;
          short
          ol_quantity;

          // output params
          char
          ol_i_name[I_NAME_LEN+1];
          char
          ol_brand_generic[BRAND_LEN+1];
          double
          ol_i_price;
          double
          ol_amount;
          short
          ol_stock;
} OL_NEW_ORDER_DATA;

typedef struct
{
          // input params
          short               w_id;
          short               d_id;
          long                c_id;
          short               o_ol_cnt;

          // output params
          EXEC_STATUS
          exec_status_code;
          char
          c_last[LAST_NAME_LEN+1];
          char                c_credit[CREDIT_LEN+1];
          double              c_discount;
          double              w_tax;
          double              d_tax;
          long                          o_id;
          short
          o_commit_flag;
          TIMESTAMP_STRUCT    o_entry_d;
          short               o_all_local;
          double              total_amount;
          OL_NEW_ORDER_DATA
          OL[MAX_OL_NEW_ORDER_ITEMS];
} NEW_ORDER_DATA, *PNEW_ORDER_DATA;

typedef struct
{         // input params
          short
w_id;
          short
d_id;
```

```
          long
c_id;
          short
c_d_id;
          short
c_w_id;
          double
h_amount;
          char
c_last[LAST_NAME_LEN+1];

          // output params
          EXEC_STATUS
exec_status_code;
          TIMESTAMP_STRUCT     h_date;
          char
w_street_1[ADDRESS_LEN+1];
          char
w_street_2[ADDRESS_LEN+1];
          char
w_city[ADDRESS_LEN+1];
          char
w_state[STATE_LEN+1];
          char
w_zip[ZIP_LEN+1];
          char
d_street_1[ADDRESS_LEN+1];
          char
d_street_2[ADDRESS_LEN+1];
          char
d_city[ADDRESS_LEN+1];
          char
d_state[STATE_LEN+1];
          char
d_zip[ZIP_LEN+1];
          char
c_first[FIRST_NAME_LEN+1];
          char
c_middle[MIDDLE_NAME_LEN + 1];
          char
c_street_1[ADDRESS_LEN+1];
          char
c_street_2[ADDRESS_LEN+1];
          char
c_city[ADDRESS_LEN+1];
          char
c_state[STATE_LEN+1];
          char
c_zip[ZIP_LEN+1];
          char
c_phone[PHONE_LEN+1];
          TIMESTAMP_STRUCT     c_since;
          char
c_credit[CREDIT_LEN+1];
          double
c_credit_lim;
          double
c_discount;
          double
c_balance;
          char
c_data[200+1];
} PAYMENT_DATA, *PPAYMENT_DATA;
```


©2005 Hewlett-Packard Company. All rights reserved.

```
typedef struct
{
          long
          ol_i_id;
          short
          ol_supply_w_id;
          short
          ol_quantity;
          double
          ol_amount;
          TIMESTAMP_STRUCT    ol_delivery_d;
} OL_ORDER_STATUS_DATA;

typedef struct
{         // input params
          short                w_id;
          short                d_id;
          long                 c_id;
          char
c_last[LAST_NAME_LEN+1];

          // output params
          EXEC_STATUS
exec_status_code;
          char
c_first[FIRST_NAME_LEN+1];
          char
c_middle[MIDDLE_NAME_LEN+1];
          double               c_balance;
          long                 o_id;
          TIMESTAMP_STRUCT     o_entry_d;
          short                o_carrier_id;
          OL_ORDER_STATUS_DATA
OL[MAX_OL_ORDER_STATUS_ITEMS];
          short                o_ol_cnt;
} ORDER_STATUS_DATA, *PORDER_STATUS_DATA;


typedef struct
{         // input params
          short                          w_id;
          short                          o_carrier_id;

          // output params
          EXEC_STATUS
          exec_status_code;
          SYSTEMTIME                     queue_time;
          long
          o_id[10];           // id's of delivered
orders for districts 1 to 10
} DELIVERY_DATA, *PDELIVERY_DATA;

//This structure is used for posting delivery
transactions and for writing them to the delivery
server.
typedef struct _DELIVERY_TRANSACTION
{
          SYSTEMTIME          queue;
          //time delivery transaction queued
          short               w_id;
          //delivery warehouse
          short               o_carrier_id;
          //carrier id
} DELIVERY_TRANSACTION;

typedef struct
{         // input params
          short
          w_id;
          short
          d_id;
          short
          threshold;

          // output params
          EXEC_STATUS
          exec_status_code;
          long
          low_stock;
} STOCK_LEVEL_DATA, *PSTOCK_LEVEL_DATA;
```

txn_base.h

```
¬§yRÎé¹v□CÝËÆ[|<¾¡□'Ý´DPý'¹¯□□^<Ô□—
*z˜,NÐE-`□J□ÈÀ□8x¾ G….-□□□Ä‡DÙm|□¥m
```

txnlog.h

```
/*        FILE:               TXNLOG.H
 *                                        Microsoft
TPC-C Kit Ver. 4.10.000
 *                                        not yet
audited
 *
 *        PURPOSE:  Header file for txn log class
 *                                        Copyright
Microsoft, 1999
 *              All Rights Reserved
 *
 */

#pragma once

    typedef struct _TXN_NEWORDER
          {
        BYTE        OL_Count;           //range 0 to
31
        BYTE        OL_Remote_Count;    //range 0 to
31
        WORD        c_id;
        int                     o_id;
          } TXN_NEWORDER;

    typedef struct _TXN_PAYMENT
          {
        BYTE        CustByName;
        BYTE        IsRemote;
          } TXN_PAYMENT;

    typedef struct _TXN_ORDERSTATUS
          {
                    BYTE      CustByName;
          } TXN_ORDERSTATUS;

          typedef union _TXN_DETAILS
          {
                    TXN_NEWORDER        NewOrder;
                    TXN_PAYMENT
          Payment;
                    TXN_ORDERSTATUS     OrderStatus;
          } TXN_DETAILS;


          // Common header for all records in txn
log.  The TxnType field is
          // a switch which identifies the particular
variant.
          #define TXN_REC_TYPE_CONTROL            1
          //
          #define TXN_REC_TYPE_TPCC
          2        // replaces TRANSACTION_TYPE_TPCC
          #define TXN_REC_TYPE_TPCC_DELIV_DEF     3


          typedef struct _TXN_RECORD_HEADER
          {
                    JULIAN_TIME         TxnStartT0;
                    // start of txn
                    BYTE      TxnType;
          // one of TXN_REC_TYPE_*
                    BYTE      TxnSubType;
                    // depends on TxnType
          } TXN_RECORD_HEADER, *PTXN_RECORD_HEADER;


          typedef struct _TXN_RECORD_CONTROL
          {
                    // common header; must exactly
match TXN_RECORD_HEADER
                    JULIAN_TIME         TxnStartT0;
                    // start of txn
                    BYTE      TxnType;
          // = TXN_REC_TYPE_CONTROL
                    BYTE      TxnSubType;
                    // depends on TxnType
                    // end of common header

                    DWORD     Len;
                    // number of bytes after this
field
          } TXN_RECORD_CONTROL, *PTXN_RECORD_CONTROL;


          // TPC-C Txn Record Layout:
          //
    //'TxnStartT0' is a Julian timestamp
corresponding to the moment the
    //txn is sent to the SUT, i.e., beginning of
response time.  Deltas
    //are in milliseconds.  Note that if RTDelay > 0,
then the txn was
```


©2005 Hewlett-Packard Company. All rights reserved.

```
    //delayed by this amount.  The delay occurs at
the beginning of the
    //response time.  So if RTDelay > 0, then the txn
was actually sent
    //at TxnStartT0 + RTDelay.
    //
    //Graphically:
    //
    //  time -->
    //
    //    |--- Menu  ---|-- Keying  --|-- Response --
|--- Think  --|
    //     <- DeltaT1 -> <- DeltaT2 -> <- DeltaT4  ->
<- DeltaT3 ->
    //                                ^
    //                                ^ TxnStartT0
    //
    //RTDelay is the amount of response time delay
included in DeltaT4.
    //RTDelay is recorded per txn because this value
can be changed on
    //the fly, and so may vary from txn to txn.
    //
    //TxnStatus is the txn completion code.  It is
used to indicate errors.
    //For example, in the New Order txn, 1% of txns
abort.  TxnStatus will
    //reflect this.

          typedef struct _TXN_RECORD_TPCC
          {
                    // common header; must exactly
match TXN_RECORD_HEADER
                    JULIAN_TIME         TxnStartT0;
                    // start of txn
                    BYTE      TxnType;
          // = TXN_REC_TYPE_TPCC
                    BYTE      TxnSubType;
                    // depends on TxnType
                    // end of common header

                    int     DeltaT1;              //
menu time (ms)
                    int     DeltaT2;              //
keying time (ms)
                    int     DeltaT3;              //
think time (ms)
                    int     DeltaT4;              //
response time (ms)
                    int     RTDelay;              //
response time delay (ms)
                    int                 TxnError;
          // error code providing more detail for
TxnStatus
                    int                 w_id;
                    // warehouse ID
                    BYTE      d_id;
          // assigned district ID for this thread
                    BYTE      d_id_ThisTxn;       //
district ID chosen for this particular
                    BYTE      TxnStatus;
          // completion status for txn to indicate
errors
                    BYTE      reserved;           //
for word alignment
                    TXN_DETAILS         TxnDetails;
          //
          } TXN_RECORD_TPCC, *PTXN_RECORD_TPCC;

          // TPC-C Deferred Delivery Txn Record
Layout:
          //
    //Incorporating delivery transaction information
into the above
          //structure would increase the size of
TXN_DETAILS from 8 to 42 bytes.
    //Hence, we store delivery transaction details in
a separate structure.
    //
          typedef struct _TXN_RECORD_TPCC_DELIV_DEF
          {
                    // common header; must exactly
match TXN_RECORD_HEADER
                    JULIAN_TIME         TxnStartT0;
                    // start of txn
                    BYTE      TxnType;
          // = TXN_REC_TYPE_TPCC_DELIV_DEF
                    BYTE      TxnSubType;
                    // = 0
                    // end of common header

                    int     DeltaT4;              //
response time (ms)
                    int                 DeltaTxnExec;
          // execution time (ms)
                    int                 w_id;
                    // warehouse ID
                    BYTE      TxnStatus;
          // completion status for txn to indicate
errors
                    BYTE      reserved;           //
for word alignment
                    short   o_carrier_id;         //
carrier id
                    long      o_id[10];           //
returned delivery transaction ids
          } TXN_RECORD_TPCC_DELIV_DEF,
*PTXN_RECORD_TPCC_DELIV_DEF;



#define             TXN_LOG_VERSION               2
#define             TXN_DATA_START
          4096      // offset in log file where log
records start
#define             TXN_LOG_EYE_CATCHER "BC"      //
signature bytes at the start of log file


          ////////////////////////////////////////////
////////////////////////////////
          // The transaction log has a header as the
first 4K block.
          //
          typedef struct _TXN_LOG_HEADER
          {
                    char
          EyeCatcher[2];      // signature bytes;
should always be "BC"
                    int
          LogVersion;                   // set to
TXN_LOG_VERSION
                    JULIAN_TIME
          BeginTxnTS;                   // timestamp
of first (lowest) txn start
                    JULIAN_TIME
          EndTxnTS;           // timestamp of last
(highest) txn completion time
                    int
          iRecCount;                    // number of
records in log file
                    BOOL
          bLogSorted;
                    int
          iFileSize;                    // file size
in bytes

                    // the record map provides a fast
way to get close to a particular timestamp in a
sorted log file.
//                  struct
//                  {
//                            JULIAN_TIME
          TS;                           // timestamp
of record
//                          int
                    iPos;               // byte
position in file
//                  }
          RecMap[RecMapSize];
//#define           RecMapSize
          200

          } TXN_LOG_HEADER, *PTXN_LOG_HEADER;

          /* Header of the sorted pointers blocks in
Temp file (in merging). */
          typedef struct BLOCK_HEADER {
                    long      BlockPos;
                    __int64 CurPos;
                    DWORD     BytesRead;
                    int                 nRecords;
                    BYTE      *offset;  /* offset of
pointers to records in the log file */
          } BLOCK_HEADER, *PBLOCK_HEADER;



#define   READ_BUFFER_SIZE              64*1024
#define   WRITE_BUFFER_SIZE              8*1024

#define   NUM_READ_BUFFERS              1
#define   NUM_WRITE_BUFFERS             2
#define   MAX_NUM_BUFFERS                           2

// flags passed in to the constructor
#define   TXN_LOG_WRITE                 0x01
#define   TXN_LOG_READ                  0x02
#define   TXN_LOG_SORTED                0x04
```


©2005 Hewlett-Packard Company. All rights reserved.

```
#define TXN_LOG_CRASHOPEN     0x08                //
if set, invalid headers will be tolerated; used for
recovery

#define   TXN_LOG_OS_ERROR    1
#define   TXN_LOG_NOT_SORTED  2

#define SKIP_CTRL_RECS                  1

class CTxnLog
{
          private:
                    DWORD               iBufferSize;
                              //buffer allocated size
                    DWORD
          iBytesFreeInBuffer;           //total bytes
available for use in buffer
                    int
          iNumBuffers;
          //buffers in use
                    int
          iActiveBuffer;
          //indicates which buffer is active: 0 or 1
                    int
          iIoBuffer;
          //buffer for any pending IO operation
//                  int
          iFilePointer;
          //position in file.
                    LARGE_INTEGER       lFilePointer;
                    //position in file.
                    int
          iNextRec;
          //when reading, ordinal value of next
record

                    // A "save point" is remembered
each time GetNextRecord is called with a start time
specified.
                    // The next time it is called, if
start time is after the save point, we start scanning
from the
                    // save point.  This is
particularly useful in FindBestInterval, where the
log is scanned repeatedly.
                    JULIAN_TIME
          SavePtTime;
//                  int
          iSavePtFilePointer;
                    LARGE_INTEGER
          lSavePtFilePointer;
                    int
          iSavePtNextRec;

                    JULIAN_TIME         lastTS;
                                        //when
writing sorted output, used to verify records are
sorted
                    BOOL                bWrite;
                                        //writing log
file
                    BOOL                bCrashOpen;
                                        // tolerate
bad headers and consistency checks

                    BOOL
          bLogSorted;                           //
is log file sorted?  applies to both input and output
                    JULIAN_TIME
          BeginTxnTS;                           //
timestamp of first (lowest) txn start
                    JULIAN_TIME
          EndTxnTS;                     // timestamp
of last (highest) txn completion time
                    int
          iRecCount;                            //
number of records in log file

                    BYTE                *pCurrent;
                                        //ptr to
current buffer
                    BYTE
          *pBuffer[MAX_NUM_BUFFERS];

                    PTXN_RECORD_HEADER  *TxnArray;
                    //transaction record pointer
array for sort

                    DWORD               dwError;
                    HANDLE              hTxnFile;
                              //handle to log file
                    HANDLE              hMapFile;
                              //map file used when
sorting the log
                    HANDLE              hIoComplete;
                              //event to signify that
there are no pending IOs
                    HANDLE              hLogFileIo;
                                        //event to
signal the IO thread to write the inactive buffer

                    Spinlock  Spin;
                              //spin lock to protect
the txn log file buffers

                    FILE
          *tmpFile;           //temp file for merging
sorted pieces
                    PBLOCK_HEADER
          tmpHeaders;                   //sorted
pointers block header
                    BYTE
          **recPointers;      //record pointer
buffers for each sorted block
                    PTXN_RECORD_HEADER  *recBuffers;
          //record buffers for each sorted block
                    int
          *PointersRead;
          //# of pointers processed in each block
                    BOOL      *BlockAvailable;
                    //whether to check a particular
block for jmin

                    int                 nBlocks;
                    int                 jmin;

          //index (block-wise) of the lowest
timestamp record
                    int
          iAvgRecordLen;
          //average record length

                    int
          iSortedReturnedCount;
          //keeps track of the # of sorted records
returned through GetSortedRecord()


                    int Write(BYTE *ptr, DWORD Size);
                    static void LogFileIO(CTxnLog *);

                    void LoadBuffers(int j);
                    //used in sort/merge to load
record buffers

          public:

                    CTxnLog::CTxnLog(LPCTSTR
szFileName, DWORD dwOpts);
                    ~CTxnLog(void);

                    int WriteToLog(PTXN_RECORD_TPCC
pTxnRcrd);
                    int
WriteToLog(PTXN_RECORD_TPCC_DELIV_DEF pTxnRcrd);
                    int
WriteToLog(PTXN_RECORD_CONTROL pCtrlRec);
                    int WriteToLog(PTXN_RECORD_HEADER
pCtrlRec);

                    int WriteCtrlRecToLog(BYTE
SubType, LPTSTR lpStr, DWORD dwLen);

                    void
CloseTransactionLogFile(void);

                    PTXN_RECORD_HEADER
GetNextRecord(BOOL bSkipCtrlRecs = FALSE);
                    PTXN_RECORD_HEADER
GetNextRecord(JULIAN_TIME SeekTimeT0, BOOL
bSkipCtrlRecs = FALSE);

                    int Sort(void);
                    PTXN_RECORD_HEADER
GetSortedRecord();

                    inline BOOL IsSorted(void) {
return bLogSorted; };
                    inline JULIAN_TIME BeginTS(void)
{ return BeginTxnTS; };
                    inline JULIAN_TIME EndTS(void) {
return EndTxnTS; };
                    inline int RecordCount(void) {
return iRecCount; };
};

class CTXNLOG_ERR : public CBaseErr
```


©2005 Hewlett-Packard Company. All rights reserved.

```
{
          public:
                    enum CTXNLOG_ERRS
                    {
                              ERR_BAD_FILE_FORMAT,
                    // "File format is invalid."

          ERR_UNKNOWN_LOG_VERSION,      // "Log file
version is unknown."
                              ERR_BROKEN_LOG_FILE,
                    // "Log file is broken."
                              ERR_LOG_NOT_SORTED,
                    // "Log file is not sorted"
                              ERR_INVALID_TIME_SEQ,
                    // "Internal Error: Record Time
Sequence invalid."
                    };

                    CTXNLOG_ERR(int iErr) :
CBaseErr(iErr) {};

                    int ErrorType() {return
ERR_TYPE_TXNLOG;};

                    char *ErrorText()
                    {
                              static char *szMsgs[] =
{
                                        "File format
is invalid.",
                                        "Log file
version is unknown.",
                                        "Log file is
broken.",
                                        "Log file is
not sorted",
                                        "Internal
Error: Record Time Sequence invalid.",
                                        ""
                              };

                              for(int i = 0;
szMsgs[i][0]; i++)
                              {
                                        if ( m_idMsg
== i )

          break;
                              }

                              return(szMsgs[i][0] ?
szMsgs[i] : ERR_UNKNOWN);
                    };
};
```


©2005 Hewlett-Packard Company. All rights reserved.

Appendix B: Database Design

The TPC-C database was created with the following Transact-SQL scripts:

removedb.sql

```
--  File:     REMOVEDB.SQL
--            Microsoft TPC-C Benchmark Kit Ver. 4.22
--            Copyright Microsoft, 2001
--  Purpose:  Removes tpcc database and backup files


use master
go

--  remove any existing database and backup files

exec sp_dbremove tpcc, dropdev
go

exec sp_dropdevice 'tpccback1'
exec sp_dropdevice 'tpccback2'
exec sp_dropdevice 'tpccback3'
exec sp_dropdevice 'tpccback4'
go
```

backupdev.sql

```
--  File:     BACKUPDEVB.SQL
--            Microsoft TPC-C Benchmark Kit Ver. 4.22
--            Copyright Microsoft, 2001
--  Purpose:  Creates tpcc database Backup Devices


use master
go

--  create backup devices

exec sp_addumpdevice 'disk','tpccback1','W:\tpccback1.dmp'
go
exec sp_addumpdevice 'disk','tpccback2','X:\tpccback2.dmp'
go
exec sp_addumpdevice 'disk','tpccback3','Y:\tpccback3.dmp'
go
exec sp_addumpdevice 'disk','tpccback4','Z:\tpccback4.dmp'
go
```

version.sql

```
--  File:     VERSION.SQL
--            Microsoft TPC-C Benchmark Kit Ver. 4.22
--            Copyright Microsoft, 2001
--  Purpose:  Returns version level of TPC-C stored procs
--  Note:     Always update the return value of this proc for
--            any interface changes or "must have" bug fixes.
--
--  The value returned by this SP defines the "interface level",
--  which must match between the stored procs and the client code.
--  The interface level may be down rev from the current kit.  This
--  indicates that the interface hasn't changed since that version.

use tpcc
go

if exists ( select name from sysobjects where name = "tpcc_version" )
          drop procedure tpcc_version
go

create proc tpcc_version
as
declare   @version  char(8)

begin
          select @version = "4.10.000"
          select @version as "Version"
end

go
```

createdb.sql

```
--  File:     CREATEDB.SQL
--            Microsoft TPC-C Benchmark Kit Ver. 4.22
--            Copyright Microsoft, 2001
--  Purpose:  Creates tpcc database and backup files for 15392 warehouses


use master
go

--        Create temporary table for timing

if exists ( select name from sysobjects where name = 'tpcc_timer' )
          drop table tpcc_timer
go

create table tpcc_timer
(
          start_date                                        char(30),
          end_date                                  char(30)
)

insert    into tpcc_timer values (0,0)
go

--        Store starting time
```


©2005 Hewlett-Packard Company. All rights reserved.

```
update    tpcc_timer
set       start_date          = (select convert(char(30), getdate(),9))
go

--  create main database files

CREATE DATABASE tpcc
ON PRIMARY
(         NAME                = MSSQL_tpcc_root,
          FILENAME  = "C:\MSSQL_tpcc_root.mdf",
          SIZE                = 8MB,
          FILEGROWTH          =0),
FILEGROUP MSSQL_cs_fg
(         NAME                = MSSQL_cs1,
          FILENAME  = "F:",
          SIZE                = 77000MB,
          FILEGROWTH          = 0),
(         NAME                = MSSQL_cs2,
          FILENAME  = "G:",
          SIZE                = 77000MB,
          FILEGROWTH          = 0),
(         NAME                = MSSQL_cs3,
          FILENAME  = "H:",
          SIZE                = 77000MB,
          FILEGROWTH          = 0),
(         NAME                = MSSQL_cs4,
          FILENAME  = "I:",
          SIZE                = 77000MB,
          FILEGROWTH          = 0),
(         NAME                = MSSQL_cs5,
          FILENAME  = "J:",
          SIZE                = 77000MB,
          FILEGROWTH          = 0),
(         NAME                = MSSQL_cs6,
          FILENAME  = "K:",
          SIZE                = 77000MB,
          FILEGROWTH          = 0),
(         NAME                = MSSQL_cs7,
          FILENAME  = "L:",
          SIZE                = 77000MB,
          FILEGROWTH          = 0),
(         NAME                = MSSQL_cs8,
          FILENAME  = "M:",
          SIZE                = 77000MB,
          FILEGROWTH          = 0),
(         NAME                = MSSQL_cs9,
          FILENAME  = "N:",
          SIZE                = 77000MB,
          FILEGROWTH          = 0),
(         NAME                = MSSQL_cs10,
          FILENAME  = "O:",
          SIZE                = 77000MB,
          FILEGROWTH          = 0),
(         NAME                = MSSQL_cs11,
          FILENAME  = "P:",
          SIZE                = 77000MB,
          FILEGROWTH          = 0),
(         NAME                = MSSQL_cs12,
          FILENAME  = "Q:",
          SIZE                = 77000MB,
          FILEGROWTH          = 0),
FILEGROUP MSSQL_misc_fg
(         NAME                = MSSQL_misc1,
          FILENAME  = "R:",
          SIZE                = 223000MB,
          FILEGROWTH          = 0),
(         NAME                = MSSQL_misc2,
          FILENAME  = "S:",
          SIZE                = 223000MB,
          FILEGROWTH          = 0)


LOG ON
(         NAME                =MSSQL_tpcc_log,
          FILENAME  ="E:",
          SIZE                =457500MB,
          FILEGROWTH          =0)


-- Store ending time
update    tpcc_timer
set       end_date  = (select convert(char(30), getdate(),9))
go

select "Elapsed time (in seconds): ", datediff(second,(select start_date from
tpcc_timer),(select end_date from tpcc_timer))

--        remove temporary table

if exists ( select name from sysobjects where name = 'tpcc_timer' )
          drop table tpcc_timer
go
```

dbopt1.sql

```
--  File:     DBOPT1.SQL
--            Microsoft TPC-C Benchmark Kit Ver. 4.22
--            Copyright Microsoft, 2001
--  Purpose:  Sets database options for data load


use master
go

exec sp_dboption tpcc,'select into/bulkcopy',true
exec sp_dboption tpcc,'trunc. log on chkpt.',true
go

use tpcc
go

checkpoint
go
```

dbopt2.sql

```
--  File:     DBOPT2.SQL
```


©2005 Hewlett-Packard Company. All rights reserved.

```
--            Microsoft TPC-C Benchmark Kit Ver. 4.22
--            Copyright Microsoft, 2001
--  Purpose:  Resets database options after data load

sp_dboption tpcc,'select into/bulkcopy',FALSE
GO

sp_dboption tpcc,'trunc. log on chkpt.',FALSE
GO

USE tpcc
GO

CHECKPOINT
GO

sp_configure 'allow updates',1
GO

RECONFIGURE WITH OVERRIDE
GO

DECLARE   @msg                varchar(50)

--                                          --
--        OPTIONS FOR SQL SERVER 8.0        --
-- Set option values for user-defined indexes --
--                                          --

SET       @msg      = ' '
PRINT     @msg
SET       @msg      = 'Setting SQL Server indexoptions'
PRINT     @msg
SET       @msg      = ' '
PRINT     @msg

EXEC sp_indexoption 'customer',         'DisAllowPageLocks',          TRUE
EXEC sp_indexoption 'district',         'DisAllowPageLocks',          TRUE
EXEC sp_indexoption 'warehouse',        'DisAllowPageLocks',          TRUE
EXEC sp_indexoption 'stock',  'DisAllowPageLocks',          TRUE
EXEC sp_indexoption 'order_line',       'DisAllowRowLocks', TRUE
EXEC sp_indexoption 'orders', 'DisAllowRowLocks', TRUE
EXEC sp_indexoption 'new_order',        'DisAllowRowLocks', TRUE
EXEC sp_indexoption 'item',             'DisAllowRowLocks', TRUE
EXEC sp_indexoption 'item',             'DisAllowPageLocks',          TRUE
GO

Print ' '
Print '******************'
Print 'Pre-specified Locking Hierarchy:'
Print '     Lockflag = 0 ==> No pre-specified hierarchy'
Print '   Lockflag = 1 ==> Lock at Page-level then Table-level'
Print '   Lockflag = 2 ==> Lock at Row-level then Table-level'
Print '   Lockflag = 3 ==> Lock at Table-level'
Print ' '

SELECT    name,lockflags
FROM      sysindexes
WHERE     object_id('warehouse')        = id OR
          object_id('district')         = id OR
          object_id('customer')         = id OR
          object_id('stock')  = id OR
          object_id('orders') = id OR
          object_id('order_line')       = id OR
          object_id('history')          = id OR
          object_id('new_order')        = id OR
          object_id('item')   = id
ORDER     BY lockflags asc
GO

sp_configure 'allow updates',0
GO

RECONFIGURE WITH OVERRIDE
GO

EXEC sp_dboption tpcc,        'auto update statistics',     FALSE
EXEC sp_dboption tpcc,        'auto create statistics',     FALSE
GO

EXEC sp_tableoption 'district',         'pintable',true
EXEC sp_tableoption 'warehouse',        'pintable',true
EXEC sp_tableoption 'new_order',        'pintable',true
EXEC sp_tableoption 'item',             'pintable',true
GO
```

RunSQLCfg.sql

```
/*  TPC-C Benchmark Kit                                                    */
/*                                                                         */
/*  RUNSQLCFG.SQL                                                          */
/*                                                                         */
/*  This script file is used to set runtime server configuration parameters */
/*                                                                         */


exec sp_configure "show advanced option", 1
go

reconfigure with override
go

/* change this value to approximately the number of connected users */
exec sp_configure "max worker threads",255

/* increase priority of user threads */
exec sp_configure "priority boost",1

/* disable automatic checkpointing */
exec sp_configure "recovery interval",32767

/* change to a mask appropriate for the number of processors on the server */
exec sp_configure "affinity mask",0xf

/* enable fibers */
exec sp_configure "lightweight pooling",1

go

reconfigure with override
go
```


©2005 Hewlett-Packard Company. All rights reserved.

VerifyTpccLoad.sql

```
--  File:     VERIFYTPCCLOAD.SQL
--            Microsoft TPC-C Benchmark Kit Ver. 4.22
--            Copyright Microsoft, 2001
--  Purpose:  Performs series of TPCC database checks to verify
--              that database load completed correctly

print     " "
select    convert(char(30), getdate(),9)
print     " "

use tpcc
go

--        ************************************
--
--        Check rows per table from SYSINDEXES
--
--        ************************************

print     'WAREHOUSE TABLE'

select    rows
from      sysindexes
where     id        = object_id("warehouse")
go

print     'DISTRICT TABLE = (10 * No of warehouses)'

select    rows
from      sysindexes
where     id        =object_id("district")
go

print     'ITEM TABLE = 100,000'

select    rows
from      sysindexes
where     id        =object_id("item")
go

print     'CUSTOMER TABLE = (30,000 * No of warehouses)'

select    rows
from      sysindexes
where     id        =object_id("customer")
go

print 'ORDERS TABLE = (30,000 * No of warehouses)'

select    rows
from      sysindexes
where     id        =object_id("orders")
go

print     'HISTORY TABLE = (30,000 * No of warehouses)'

select    rows
from      sysindexes
where     id        =object_id("history")
go

print     'STOCK TABLE = (100,000 * No of warehouses)'

select    rows
from      sysindexes
where     id        =object_id("stock")
go

print     'ORDER_LINE TABLE = (300,000 * No of warehouses + some change)'

select    rows
from      sysindexes
where     id        =object_id("order_line")
go

print     'NEW_ORDER TABLE = (9000 * No of warehouses)'

select    rows
from      sysindexes
where     id        =object_id("new_order")
go

--        *************
--
--        Check indices
--
--        *************

print '**************Index Check****************'

use tpcc
go

sp_helpindex        customer
go

sp_helpindex        stock
go

sp_helpindex        district
go

sp_helpindex        item
go

sp_helpindex        new_order
go

sp_helpindex        orders
go

sp_helpindex        order_line
go

sp_helpindex        warehouse
go
```

backup.sql

```
--  File:     BACKUP.SQL
--            Microsoft TPC-C Benchmark Kit Ver. 4.22
--            Copyright Microsoft, 2001
```


©2005 Hewlett-Packard Company. All rights reserved.

```
--  Purpose:  Creates backup of tpcc database


declare @startdate datetime
declare @enddate datetime
select @startdate = getdate()
select "Start date:", convert(varchar(30),@startdate,9)

dump database tpcc to tpccback1, tpccback2, tpccback3, tpccback4 with init, stats =
1

select @enddate = getdate()
select "End date: ", convert(varchar(30),@enddate,9)
select "Elapsed time (in seconds): ", datediff(second, @startdate, @enddate)

go
```

restore.sql

```
--  File:     RESTORE.SQL
--            Microsoft TPC-C Benchmark Kit Ver. 4.22
--            Copyright Microsoft, 2001
--  Purpose:  Loads database backup from backup files


declare @startdate datetime
declare @enddate datetime
select @startdate = getdate()
select "Start date:", convert(varchar(30),@startdate,9)

load database tpcc from tpccback1, tpccback2, tpccback3, tpccback4 with stats = 1,
replace

select @enddate = getdate()
select "End date: ", convert(varchar(30),@enddate,9)
select "Elapsed time (in seconds): ", datediff(second, @startdate, @enddate)

go

sp_dboption tpcc,'torn page detection','false'
go
```

sqlshutdown.sql

```
use tpcc
go
checkpoint
go
shutdown
go
```

idxcuscl.sql

```
-----------------------------------------------------------------
--                                                             --
--  File:  IDXCUSCL.SQL                                        --
--         Microsoft TPC-C Benchmark Kit Ver. 4.51             --
--         Copyright Microsoft, 2003                           --
--                                                             --
--         Creates clustered index on customer table           --
-----------------------------------------------------------------

use tpcc
go

declare   @startdate          datetime,
          @enddate  datetime

select    @startdate = getdate()
select    'Start date:',
                    convert(varchar(30),@startdate,21)

if exists ( select name from sysindexes where name = 'customer_c1' )
          drop index customer.customer_c1

create unique clustered index customer_c1 on customer(c_w_id, c_d_id, c_id)
          on MSSQL_cs_fg

select    @enddate = getdate()
select    'End date: ',
                    convert(varchar(30),@enddate, 21)
select    'Elapsed time (in seconds): ',
                    datediff(second, @startdate, @enddate)
go
```

idxcusnc.sql

```
-----------------------------------------------------------------
--                                                             --
--  File:  IDXCUSNC.SQL                                        --
--         Microsoft TPC-C Benchmark Kit Ver. 4.51             --
--         Copyright Microsoft, 2003                           --
--                                                             --
--         Creates non-clustered index on customer table       --
-----------------------------------------------------------------

use tpcc
go

declare   @startdate          datetime,
          @enddate  datetime

select    @startdate = getdate()
select    'Start date:',
                    convert(varchar(30),@startdate, 21)

if exists ( select name from sysindexes where  name = 'customer_nc1' )
          drop index customer.customer_nc1

create unique nonclustered index customer_nc1 on customer(c_w_id, c_d_id, c_last,
c_first, c_id)
          on MSSQL_cs_fg

select    @enddate = getdate()
select    'End date: ',
                    convert(varchar(30),@enddate, 21)
select    'Elapsed time (in seconds): ',
                    datediff(second, @startdate, @enddate)
go
```


©2005 Hewlett-Packard Company. All rights reserved.

idxdiscl.sql

```
-----------------------------------------------------------------
--                                                             --
--  File:  IDXDISCL.SQL                                        --
--         Microsoft TPC-C Benchmark Kit Ver. 4.51             --
--         Copyright Microsoft, 2003                           --
--                                                             --
--         Creates clustered index on district table           --
-----------------------------------------------------------------

use tpcc
go

declare   @startdate          datetime,
          @enddate  datetime

select    @startdate = getdate()
select    'Start date:',
                    convert(varchar(30),@startdate, 21)

if exists ( select name from sysindexes where name = 'district_c1' )
          drop index district.district_c1

create unique clustered index  district_c1 on district(d_w_id, d_id)
          with fillfactor=100 on MSSQL_misc_fg

select    @enddate = getdate()
select    'End date: ',
                    convert(varchar(30),@enddate, 21)
select    'Elapsed time (in seconds): ',
                    datediff(second, @startdate, @enddate)
go
```

idxitmcl.sql

```
-----------------------------------------------------------------
--                                                             --
--  File:  IDXITMCL.SQL                                        --
--         Microsoft TPC-C Benchmark Kit Ver. 4.51             --
--         Copyright Microsoft, 2003                           --
--                                                             --
--         Creates clustered index on item table               --
-----------------------------------------------------------------

use tpcc
go

declare   @startdate          datetime,
          @enddate  datetime

select    @startdate = getdate()
select    'Start date:',
                    convert(varchar(30),@startdate, 21)

if exists ( select name from sysindexes where  name = 'item_c1' )
          drop index item.item_c1

create unique clustered index item_c1 on item(i_id)
          on MSSQL_misc_fg

select    @enddate = getdate()
select    'End date: ',
                    convert(varchar(30),@enddate, 21)
select    'Elapsed time (in seconds): ',
                    datediff(second, @startdate, @enddate)
go
```

idxhiscl.sql

```
-----------------------------------------------------------------
--                                                             --
--  File:  IDXHISCL.SQL                                        --
--         Microsoft TPC-C Benchmark Kit Ver. 4.51             --
--         Copyright Microsoft, 2003                           --
--                                                             --
--         Creates clustered index on history table            --
--                                                             --
--         CAUTION:  This index is only beneficial for systems --
--         CAUTION:  with 8 or more processors.                --
--         CAUTION:  It may negatively impact performance on   --
--         CAUTION:  systems with less than 8 processors.      --
--                                                             --
-----------------------------------------------------------------

use tpcc
go

declare   @startdate          datetime,
          @enddate  datetime

select    @startdate = getdate()
select    'Start date:',
                    convert(varchar(30),@startdate, 21)

if exists ( select name from sysindexes where  name = 'history_c1' )
          drop index history.history_c1

create unique clustered index history_c1 on history(h_c_w_id, h_date, h_c_d_id,
h_c_id, h_amount)
          on MSSQL_misc_fg

select    @enddate = getdate()
select    'End date: ',
                    convert(varchar(30),@enddate, 21)
select    'Elapsed time (in seconds): ',
                    datediff(second, @startdate, @enddate)
go
```

idxnodcl.sql

```
-----------------------------------------------------------------
--                                                             --
--  File:  IDXNODCL.SQL                                        --
--         Microsoft TPC-C Benchmark Kit Ver. 4.51             --
```


©2005 Hewlett-Packard Company. All rights reserved.

```
--         Copyright Microsoft, 2003                          --
--                                                            --
--         Creates clustered index on new_order table         --
----------------------------------------------------------------

use tpcc
go

declare   @startdate          datetime,
          @enddate  datetime

select    @startdate = getdate()
select    'Start date:',
                    convert(varchar(30),@startdate, 21)

if exists ( select name from sysindexes where  name = 'new_order_c1' )
          drop index new_order.new_order_c1

create unique clustered index new_order_c1 on new_order(no_w_id, no_d_id, no_o_id)

          on MSSQL_misc_fg

select    @enddate = getdate()
select    'End date: ',
                    convert(varchar(30),@enddate, 21)
select    'Elapsed time (in seconds): ',
                    datediff(second, @startdate, @enddate)
go
```

idxodlcl.sql

```
----------------------------------------------------------------
--                                                            --
--  File:  IDXODLCL.SQL                                       --
--         Microsoft TPC-C Benchmark Kit Ver. 4.51            --
--         Copyright Microsoft, 2003                          --
--                                                            --
--         Creates clustered index on order_line table        --
----------------------------------------------------------------

use tpcc
go

declare   @startdate          datetime,
          @enddate  datetime

select    @startdate = getdate()
select    'Start date:',
                    convert(varchar(30),@startdate, 21)

if exists ( select name from sysindexes where  name = 'order_line_c1' )
          drop index order_line.order_line_c1

create unique clustered index order_line_c1 on order_line(ol_w_id, ol_d_id, ol_o_id,
ol_number)
          on MSSQL_misc_fg

select    @enddate = getdate()
select    'End date: ',
                    convert(varchar(30),@enddate, 21)
select    'Elapsed time (in seconds): ',
                    datediff(second, @startdate, @enddate)
go
```

idxordcl.sql

```
----------------------------------------------------------------
--                                                            --
--  File:  IDXORDCL.SQL                                       --
--         Microsoft TPC-C Benchmark Kit Ver. 4.51            --
--         Copyright Microsoft, 2003                          --
--                                                            --
--         Creates clustered index on orders table            --
----------------------------------------------------------------

use tpcc
go

declare   @startdate          datetime,
          @enddate  datetime

select    @startdate = getdate()
select    'Start date:',
                    convert(varchar(30),@startdate, 21)

if exists ( select name from sysindexes where  name = 'orders_c1' )
          drop index orders.orders_c1

create unique clustered index orders_c1 on orders(o_w_id, o_d_id, o_id)
          on MSSQL_misc_fg

select    @enddate = getdate()
select    'End date: ',
                    convert(varchar(30),@enddate, 21)
select    'Elapsed time (in seconds): ',
                    datediff(second, @startdate, @enddate)
go
```

idxordnc.sql

```
----------------------------------------------------------------
--                                                            --
--  File:  IDXORDNC.SQL                                       --
--         Microsoft TPC-C Benchmark Kit Ver. 4.51            --
--         Copyright Microsoft, 2003                          --
--                                                            --
--         Creates non-clustered index on orders table        --
----------------------------------------------------------------

use tpcc
go

declare   @startdate          datetime,
          @enddate  datetime

select    @startdate = getdate()
select    'Start date:',
```


©2005 Hewlett-Packard Company. All rights reserved.

```
                    convert(varchar(30),@startdate, 21)

if exists ( select name from sysindexes where  name = 'orders_nc1' )
          drop index orders.orders_nc1

create index orders_nc1 on orders(o_w_id, o_d_id, o_c_id, o_id)
          on MSSQL_misc_fg

select    @enddate = getdate()
select    'End date: ',
                    convert(varchar(30),@enddate, 21)
select    'Elapsed time (in seconds): ',
                    datediff(second, @startdate, @enddate)
go
```

idxstkcl.sql

```
-----------------------------------------------------------------
--                                                             --
--  File:  IDXSTKCL.SQL                                        --
--         Microsoft TPC-C Benchmark Kit Ver. 4.51             --
--         Copyright Microsoft, 2003                           --
--                                                             --
--         Creates clustered index on stock table              --
-----------------------------------------------------------------

use tpcc
go

declare   @startdate          datetime,
          @enddate  datetime

select    @startdate = getdate()
select    'Start date:',
                    convert(varchar(30),@startdate, 21)

if exists ( select name from sysindexes where  name = 'stock_c1' )
          drop index stock.stock_c1

create unique clustered index stock_c1 on stock(s_i_id, s_w_id)
          on MSSQL_cs_fg

select    @enddate = getdate()
select    'End date: ',
                    convert(varchar(30),@enddate, 21)
select    'Elapsed time (in seconds): ',
                    datediff(second, @startdate, @enddate)
go
```

idxwarcl.sql

```
-----------------------------------------------------------------
--                                                             --
--  File:  IDXWARCL.SQL                                        --
--         Microsoft TPC-C Benchmark Kit Ver. 4.51             --
--         Copyright Microsoft, 2003                           --
--                                                             --
--         Creates clustered index on warehouse table          --
-----------------------------------------------------------------

use tpcc
go

declare   @startdate          datetime,
          @enddate  datetime

select    @startdate = getdate()
select    'Start date:',
                    convert(varchar(30),@startdate, 21)

if exists ( select name from sysindexes where name = 'warehouse_c1' )
          drop index warehouse.warehouse_c1

create unique clustered index warehouse_c1 on warehouse(w_id)
          with fillfactor=100 on MSSQL_misc_fg

select    @enddate = getdate()
select    'End date: ',
                    convert(varchar(30),@enddate, 21)
select    'Elapsed time (in seconds): ',
                    datediff(second, @startdate, @enddate)
go
```

tables.sql

```
-----------------------------------------------------------------
--                                                             --
--  File:  TABLES.SQL                                          --
--         Microsoft TPC-C Benchmark Kit Ver. 4.51             --
--         Copyright Microsoft, 2003                           --
--                                                             --
--         Creates TPC-C tables                                --
-----------------------------------------------------------------

SET ANSI_NULL_DFLT_OFF ON
go

use tpcc
go

-----------------------------------
-- Remove all existing TPC-C tables
-----------------------------------
if exists ( select name from sysobjects where name = 'warehouse' )
          drop table warehouse
go
if exists ( select name from sysobjects where name = 'district' )
          drop table district
go
if exists ( select name from sysobjects where name = 'customer' )
          drop table customer
go
if exists ( select name from sysobjects where name = 'history' )
          drop table history
go
if exists ( select name from sysobjects where name = 'new_order' )
          drop table new_order
go
if exists ( select name from sysobjects where name = 'orders' )
          drop table orders
```


©2005 Hewlett-Packard Company. All rights reserved.

```
go
if exists ( select name from sysobjects where name = 'order_line' )
          drop table order_line
go
if exists ( select name from sysobjects where name = 'item' )
          drop table item
go
if exists ( select name from sysobjects where name = 'stock' )
          drop table stock
go

--------------------
-- Create new tables
--------------------
create table warehouse
(
          w_id                                  int,
          w_name                                char(10),
          w_street_1                            char(20),
          w_street_2                            char(20),
          w_city                                char(20),
          w_state                               char(2),
          w_zip                                 char(9),
          w_tax                                 numeric(4,4),
          w_ytd                                 numeric(12,2)
) on MSSQL_misc_fg
go

create table district
(
          d_id                                  tinyint,
          d_w_id                                int,
          d_name                                char(10),
          d_street_1                            char(20),
          d_street_2                            char(20),
          d_city                                char(20),
          d_state                               char(2),
          d_zip                                 char(9),
          d_tax                                 numeric(4,4),
          d_ytd                                 numeric(12,2),
          d_next_o_id                           int
) on MSSQL_misc_fg
go

create table customer
(
          c_id                                  int,
          c_d_id                                tinyint,
          c_w_id                                int,
          c_first                               char(16),
          c_middle                      char(2),
          c_last                                char(16),
          c_street_1                            char(20),
          c_street_2                            char(20),
          c_city                                char(20),
          c_state                               char(2),
          c_zip                                 char(9),
          c_phone                               char(16),
          c_since                               datetime,
          c_credit                      char(2),
          c_credit_lim                          numeric(12,2),
          c_discount                            numeric(4,4),
          c_balance                     numeric(12,2),
          c_ytd_payment                         numeric(12,2),
          c_payment_cnt                         smallint,
          c_delivery_cnt                        smallint,
          c_data                                char(500)
) on MSSQL_cs_fg
go

create table history
(
          h_c_id                                int,
          h_c_d_id                      tinyint,
          h_c_w_id                      int,
          h_d_id                                tinyint,
          h_w_id                                int,
          h_date                                datetime,
          h_amount                      numeric(6,2),
          h_data                                char(24)
) on MSSQL_misc_fg
go

create table new_order
(
          no_o_id                               int,
          no_d_id                               tinyint,
          no_w_id                               int
) on MSSQL_misc_fg
go

create table orders
(
          o_id                                  int,
          o_d_id                                tinyint,
          o_w_id                                int,
          o_c_id                                int,
          o_entry_d                     datetime,
          o_carrier_id                          tinyint,
          o_ol_cnt                      tinyint,
          o_all_local                           tinyint
) on MSSQL_misc_fg
go

create table order_line
(
          ol_o_id                               int,
          ol_d_id                               tinyint,
          ol_w_id                               int,
          ol_number                     tinyint,
          ol_i_id                               int,
          ol_supply_w_id                        int,
          ol_delivery_d                         datetime,
          ol_quantity                           smallint,
          ol_amount                     numeric(6,2),
          ol_dist_info                          char(24)
) on MSSQL_misc_fg
go

create table item
(
          i_id                                  int,
          i_im_id                               int,
          i_name                                char(24),
          i_price                               numeric(5,2),
          i_data                                char(50)
```


©2005 Hewlett-Packard Company. All rights reserved.

```
) on MSSQL_misc_fg
go

create table stock
(
          s_i_id                                int,
          s_w_id                                int,
          s_quantity                            smallint,
          s_dist_01                   char(24),
          s_dist_02                   char(24),
          s_dist_03                   char(24),
          s_dist_04                   char(24),
          s_dist_05                   char(24),
          s_dist_06                   char(24),
          s_dist_07                   char(24),
          s_dist_08                   char(24),
          s_dist_09                   char(24),
          s_dist_10                   char(24),
          s_ytd                                 int,
          s_order_cnt                           smallint,
          s_remote_cnt                          smallint,
          s_data                                char(50)
) on MSSQL_cs_fg
go
```

neword.sql

```
--  File:     NEWORD.SQL
--            Microsoft TPC-C Benchmark Kit Ver. 4.22
--            Copyright Microsoft, 2001
--  Purpose:  Creates new order transaction stored procedure
--
--        Interface Level: 4.10.000

use tpcc
go

if exists ( select name from sysobjects where name = "tpcc_neworder" )
          drop procedure tpcc_neworder
go

create proc tpcc_neworder
                                                @w_id           smallint,
                                                @d_id           tinyint,
                                                @c_id           int,
                                                @o_ol_cnt       tinyint,
                                                @o_all_local    tinyint,
                                                @i_id1  int = 0, @s_w_id1
smallint = 0, @ol_qty1  smallint = 0,
                                                @i_id2  int = 0, @s_w_id2
smallint = 0, @ol_qty2  smallint = 0,
                                                @i_id3  int = 0, @s_w_id3
smallint = 0, @ol_qty3  smallint = 0,
                                                @i_id4  int = 0, @s_w_id4
smallint = 0, @ol_qty4  smallint = 0,
                                                @i_id5  int = 0, @s_w_id5
smallint = 0, @ol_qty5  smallint = 0,
                                                @i_id6  int = 0, @s_w_id6
smallint = 0, @ol_qty6  smallint = 0,
                                                @i_id7  int = 0, @s_w_id7
smallint = 0, @ol_qty7  smallint = 0,
                                                @i_id8  int = 0, @s_w_id8
smallint = 0, @ol_qty8  smallint = 0,
                                                @i_id9  int = 0, @s_w_id9
smallint = 0, @ol_qty9  smallint = 0,
                                                @i_id10 int = 0, @s_w_id10
smallint = 0, @ol_qty10 smallint = 0,
                                                @i_id11 int = 0, @s_w_id11
smallint = 0, @ol_qty11 smallint = 0,
                                                @i_id12 int = 0, @s_w_id12
smallint = 0, @ol_qty12 smallint = 0,
                                                @i_id13 int = 0, @s_w_id13
smallint = 0, @ol_qty13 smallint = 0,
                                                @i_id14 int = 0, @s_w_id14
smallint = 0, @ol_qty14 smallint = 0,
                                                @i_id15 int = 0, @s_w_id15
smallint = 0, @ol_qty15 smallint = 0


as
declare   @w_tax          numeric(4,4),
        @d_tax          numeric(4,4),
        @c_last         char(16),
        @c_credit       char(2),
        @c_discount     numeric(4,4),
        @i_price        numeric(5,2),
        @i_name         char(24),
        @i_data         char(50),
        @o_entry_d      datetime,
        @remote_flag    int,
        @s_quantity     smallint,
        @s_data         char(50),
        @s_dist         char(24),
          @li_no          int,
          @o_id               int,
          @commit_flag    tinyint,
        @li_id          int,
        @li_s_w_id      smallint,
        @li_qty         smallint,
          @ol_number          int,
          @c_id_local         int

begin

begin transaction n

--  get district tax and next availible order id and update
--  plus initialize local variables

          update    district
          set       @d_tax       = d_tax,
                    @o_id        = d_next_o_id,
                    d_next_o_id  = d_next_o_id + 1,
                    @o_entry_d   = getdate(),
                    @li_no       = 0,
                    @commit_flag = 1
          where     d_w_id       = @w_id and
                    d_id         = @d_id

--  process orderlines

          while (@li_no < @o_ol_cnt)
          begin
```


©2005 Hewlett-Packard Company. All rights reserved.

```
                    select @li_no = @li_no + 1

--  set i_id, s_w_id, and qty for this lineitem

                    select    @li_id = case @li_no
                                        when 1 then @i_id1
                                        when 2 then @i_id2
                                        when 3 then @i_id3
                                        when 4 then @i_id4
                                        when 5 then @i_id5
                                        when 6 then @i_id6
                                        when 7 then @i_id7
                                        when 8 then @i_id8
                                        when 9 then @i_id9
                                        when 10 then @i_id10
                                        when 11 then @i_id11
                                        when 12 then @i_id12
                                        when 13 then @i_id13
                                        when 14 then @i_id14
                                        when 15 then @i_id15
                                        end,

                              @li_s_w_id = case @li_no
                                              when 1 then @s_w_id1
                                              when 2 then @s_w_id2
                                              when 3 then @s_w_id3
                                              when 4 then @s_w_id4
                                              when 5 then @s_w_id5
                                              when 6 then @s_w_id6
                                              when 7 then @s_w_id7
                                              when 8 then @s_w_id8
                                              when 9 then @s_w_id9
                                              when 10 then @s_w_id10
                                              when 11 then @s_w_id11
                                              when 12 then @s_w_id12
                                              when 13 then @s_w_id13
                                              when 14 then @s_w_id14
                                              when 15 then @s_w_id15
                                              end,

                              @li_qty = case  @li_no
                                           when 1 then @ol_qty1
                                           when 2 then @ol_qty2
                                           when 3 then @ol_qty3
                                           when 4 then @ol_qty4
                                           when 5 then @ol_qty5
                                           when 6 then @ol_qty6
                                           when 7 then @ol_qty7
                                           when 8 then @ol_qty8
                                           when 9 then @ol_qty9
                                           when 10 then @ol_qty10
                                           when 11 then @ol_qty11
                                           when 12 then @ol_qty12
                                           when 13 then @ol_qty13
                                           when 14 then @ol_qty14
                                           when 15 then @ol_qty15
                                           end

--  get item data (no one updates item)

                    select    @i_price = i_price,
                              @i_name  = i_name,
                              @i_data  = i_data
                    from      item (tablock repeatableread)
                    where     i_id = @li_id

--  update stock values

                    update    stock
                    set       s_ytd               = s_ytd + @li_qty,
                              @s_quantity         = s_quantity   = s_quantity -
@li_qty +
                                                                      case when
(s_quantity - @li_qty < 10) then 91 else 0 end,
                              s_order_cnt         = s_order_cnt + 1,
                              s_remote_cnt        = s_remote_cnt + case when
(@li_s_w_id = @w_id) then 0 else 1 end,
                              @s_data             = s_data,
                              @s_dist             = case @d_id
                                                      when 1  then s_dist_01
                                                      when 2  then s_dist_02
                                                      when 3  then s_dist_03
                                                      when 4  then s_dist_04
                                                      when 5  then s_dist_05
                                                      when 6  then s_dist_06
                                                      when 7  then s_dist_07
                                                      when 8  then s_dist_08
                                                      when 9  then s_dist_09
                                                      when 10 then s_dist_10
                                                      end
                    where     s_i_id              = @li_id and
                              s_w_id              = @li_s_w_id

--  if there actually is a stock (and item) with these ids, go to work

                    if (@@rowcount > 0)
                    begin

--  insert order_line data (using data from item and stock)

                              insert into order_line values(@o_id,
                                                                    @d_id,

                                                                    @w_id,
                                                                    @li_no,
                                                                    @li_id,
                                                                    @li_s_w_id,
                                                                    "dec 31, 1899",
                                                                    @li_qty,
                                                                    @i_price *
@li_qty,
                                                                    @s_dist)

--  send line-item data to client

                              select    @i_name,
                                        @s_quantity,
                                        b_g = case when (
(patindex("%ORIGINAL%",@i_data) > 0) and

(patindex("%ORIGINAL%",@s_data) > 0) )
                                              then "B" else "G" end,
                                        @i_price,
                                        @i_price * @li_qty

                    end
```


©2005 Hewlett-Packard Company. All rights reserved.

```
                    else
                    begin

--  no item (or stock) found - triggers rollback condition

                              select "",0,"",0,0
                              select @commit_flag = 0

                    end
          end

--  get customer last name, discount, and credit rating

          select    @c_last     = c_last,
                    @c_discount = c_discount,
                    @c_credit   = c_credit,
                    @c_id_local = c_id
          from      customer (repeatableread)
          where     c_id                = @c_id and
                    c_w_id              = @w_id and
                    c_d_id              = @d_id

--  insert fresh row into orders table

          insert into orders values (   @o_id,
                                                    @d_id,
                                                    @w_id,
                                                    @c_id_local,
                                                    @o_entry_d,
                                                    0,
                                                    @o_ol_cnt,
                                                    @o_all_local)

--  insert corresponding row into new-order table

          insert into new_order values (          @o_id,
                                                    @d_id,
                                                    @w_id)

--  select warehouse tax

          select    @w_tax    = w_tax
          from      warehouse (repeatableread)
          where     w_id      = @w_id

          if (@commit_flag = 1)
                    commit transaction n
          else

--  all that work for nuthin!!!

                    rollback transaction n

--  return order data to client

          select    @w_tax,
                    @d_tax,
                    @o_id,
                    @c_last,
                    @c_discount,
                    @c_credit,
                    @o_entry_d,
                    @commit_flag
```

```
end

go
```

delivery.sql

```
--  File:     DELIVERY.SQL
--            Microsoft TPC-C Benchmark Kit Ver. 4.22
--            Copyright Microsoft, 2001
--  Purpose:  Creates delivery transaction stored procedure
--
--        Interface Level: 4.10.000

use tpcc
go

if exists (select name from sysobjects where name = "tpcc_delivery" )
          drop procedure tpcc_delivery
go

create proc tpcc_delivery     @w_id           smallint,

                                        @o_carrier_id   smallint
as

declare @d_id       tinyint,
        @o_id       int,
        @c_id       int,
        @total      numeric(12,2),
        @oid1       int,
        @oid2       int,
        @oid3       int,
        @oid4       int,
        @oid5       int,
        @oid6       int,
        @oid7       int,
        @oid8       int,
        @oid9       int,
        @oid10      int

select @d_id = 0

begin tran d

          while (@d_id < 10)
          begin

                  select      @d_id  = @d_id + 1,
                              @total = 0,
                              @o_id  = 0

                    select    top 1
                              @o_id     = no_o_id
                    from      new_order (serializable updlock)
                    where     no_w_id   = @w_id and
                              no_d_id   = @d_id
                    order     by no_o_id asc

                  if (@@rowcount <> 0)
                    begin
```


©2005 Hewlett-Packard Company. All rights reserved.

```
--  claim the order for this district

                              delete    new_order
                              where     no_w_id   = @w_id and
                                        no_d_id   = @d_id and
                                        no_o_id   = @o_id

--  set carrier_id on this order (and get customer id)

                              update    orders
                              set       o_carrier_id        = @o_carrier_id,
                                        @c_id               = o_c_id
                              where     o_w_id              = @w_id and
                                        o_d_id              = @d_id and
                                        o_id                = @o_id

--  set date in all lineitems for this order (and sum amounts)

                              update    order_line
                              set       ol_delivery_d       = getdate(),
                                        @total              = @total + ol_amount
                              where     ol_w_id             = @w_id and
                                        ol_d_id             = @d_id and
                                        ol_o_id             = @o_id

--  accummulate lineitem amounts for this order into customer

                              update    customer
                              set       c_balance = c_balance + @total,
                                        c_delivery_cnt      = c_delivery_cnt + 1

                              where     c_w_id              = @w_id and
                                        c_d_id              = @d_id and
                                        c_id                = @c_id

                  end

          select @oid1 = case @d_id when  1  then @o_id else @oid1 end,
               @oid2 = case @d_id when  2  then @o_id else @oid2 end,
               @oid3 = case @d_id when  3  then @o_id else @oid3 end,
               @oid4 = case @d_id when  4  then @o_id else @oid4 end,
               @oid5 = case @d_id when  5  then @o_id else @oid5 end,
               @oid6 = case @d_id when  6  then @o_id else @oid6 end,
               @oid7 = case @d_id when  7  then @o_id else @oid7 end,
               @oid8 = case @d_id when  8  then @o_id else @oid8 end,
               @oid9 = case @d_id when  9  then @o_id else @oid9 end,
               @oid10 = case @d_id when 10 then @o_id else @oid10 end

    end

commit tran d

-- return delivery data to client

select @oid1,
       @oid2,
       @oid3,
       @oid4,
       @oid5,
       @oid6,
       @oid7,
       @oid8,
       @oid9,
       @oid10

go
```

null-txns.sql

```
-- TPC-C Null Txn Stored Procs
-- Microsoft TPC-C Kit
-- 8/17/99
--
-- This script will create stored procs which accept the same parameters and return
correctly formed
-- results sets to match the standard TPC-C stored procs.  Of course, the advantage
is that these
-- stored procs place almost no load on SQL Server and do not require a database.
--
-- The purpose of these stored procs is to size and test the web client without the
need of a fully
-- scaled database.
--
drop proc tpcc_delivery
drop proc tpcc_neworder
drop proc tpcc_orderstatus
drop proc tpcc_payment
drop proc tpcc_stocklevel
drop proc tpcc_version
drop table order_line_null
go

create proc tpcc_delivery     @w_id           smallint,

                                                                @o_carrier_id   smallint
as

declare @d_id tinyint,
        @o_id int,
        @c_id int,
        @total numeric(12,2),
        @oid1 int,
        @oid2 int,
        @oid3 int,
        @oid4 int,
        @oid5 int,
        @oid6 int,
        @oid7 int,
        @oid8 int,
        @oid9 int,
        @oid10 int

declare @delaytime varchar(30)

-- uniform random delay of 0 - 1 second; avg = 0.50
select @delaytime = '00:00:0' + cast(cast((rand()*1.00) as decimal(4,3)) as char(5))
waitfor delay @delaytime

select 3001, 3001, 3001, 3001, 3001, 3001, 3001, 3001, 3001, 3001


GO

create proc tpcc_neworder
                                                        @w_id           smallint,
```


©2005 Hewlett-Packard Company. All rights reserved.

```
= 0, @ol_qty1 smallint = 0,

= 0, @ol_qty2 smallint = 0,

= 0, @ol_qty3 smallint = 0,

= 0, @ol_qty4 smallint = 0,

= 0, @ol_qty5 smallint = 0,

= 0, @ol_qty6 smallint = 0,

= 0, @ol_qty7 smallint = 0,

= 0, @ol_qty8 smallint = 0,

= 0, @ol_qty9 smallint = 0,

smallint = 0, @ol_qty10 smallint = 0,

smallint = 0, @ol_qty11 smallint = 0,

smallint = 0, @ol_qty12 smallint = 0,

smallint = 0, @ol_qty13 smallint = 0,

smallint = 0, @ol_qty14 smallint = 0,

smallint = 0, @ol_qty15 smallint = 0


as
declare   @w_tax          numeric(4,4),
        @d_tax          numeric(4,4),
        @c_last         char(16),
        @c_credit       char(2),
        @c_discount     numeric(4,4),
        @i_price        numeric(5,2),
        @i_name         char(24),
        @o_entry_d      datetime,
          @li_no          int,
          @o_id               int,
          @commit_flag    tinyint,
        @li_id          int,
        @li_qty         smallint

declare @delaytime varchar(30)

begin
    -- uniform random delay of 0 - 0.6 second; avg = 0.3
    select @delaytime = '00:00:0' + cast(cast((rand()*0.60) as decimal(4,3)) as
char(5))
    waitfor delay @delaytime

    --  process orderlines

          select @commit_flag = 1, @li_no = 0
```

```
@d_id           tinyint,
@c_id           int,
@o_ol_cnt       tinyint,
@o_all_local    tinyint,
@i_id1  int = 0, @s_w_id1 smallint

@i_id2  int = 0, @s_w_id2 smallint

@i_id3  int = 0, @s_w_id3 smallint

@i_id4  int = 0, @s_w_id4 smallint

@i_id5  int = 0, @s_w_id5 smallint

@i_id6  int = 0, @s_w_id6 smallint

@i_id7  int = 0, @s_w_id7 smallint

@i_id8  int = 0, @s_w_id8 smallint

@i_id9  int = 0, @s_w_id9 smallint

@i_id10 int = 0, @s_w_id10

@i_id11 int = 0, @s_w_id11

@i_id12 int = 0, @s_w_id12

@i_id13 int = 0, @s_w_id13

@i_id14 int = 0, @s_w_id14

@i_id15 int = 0, @s_w_id15
```

```
    while (@li_no < @o_ol_cnt)
          begin

          select @li_id = case @li_no
                              when 1 then @i_id1
                                  when 2 then @i_id2
                                  when 3 then @i_id3
                                  when 4 then @i_id4
                                  when 5 then @i_id5
                                  when 6 then @i_id6
                                  when 7 then @i_id7
                                  when 8 then @i_id8
                                  when 9 then @i_id9
                                  when 10 then @i_id10
                                  when 11 then @i_id11
                                  when 12 then @i_id12
                                  when 13 then @i_id13
                                  when 14 then @i_id14
                                  when 15 then @i_id15
                                  end


        select @li_no = @li_no + 1
          select @i_price = 23.45, @li_qty = @li_no

          if (@li_id = 999999)
                    begin
                    select '',0,'',0,0
                    select @commit_flag = 0
                    end
          else
                    begin
                    select 'Item Name blah',17,'G', @i_price, @i_price * @li_qty
                    end

          end

--  return order data to client

          select    @w_tax = 0.1234,
                    @d_tax = 0.0987,
                    @o_id = 3001,
                    @c_last = 'BAROUGHTABLE',
                    @c_discount = 0.2198,
                    @c_credit = 'GC',
                    @o_entry_d = getdate()

          select    @w_tax,
                    @d_tax,
                    @o_id,
                    @c_last,
                    @c_discount,
                    @c_credit,
                    @o_entry_d,
                    @commit_flag

end

GO

create proc tpcc_orderstatus @w_id                smallint,
                                                                        @d_id
          tinyint,
```


©2005 Hewlett-Packard Company. All rights reserved.

```
                                                                    @c_id
          int,                                                      @c_last
          char(16) = ''

as

declare @c_balance            numeric(12,2),
        @c_first              char(16),
        @c_middle             char(2),
        @o_id                           int,
        @o_entry_d            datetime,
        @o_carrier_id                   smallint,
          @ol_cnt                       smallint

declare @delaytime varchar(30)


    -- uniform random delay of 0 - 0.2 second; avg = 0.1
    select @delaytime = '00:00:0' + cast(cast((rand()*0.20) as decimal(4,3)) as
char(5))
    waitfor delay @delaytime

          select
                 @c_id      = 113,
                 @c_balance = -10.00,
                 @c_first   = '8YCodgytqCj8',
                 @c_middle  = 'OE',
                 @c_last    = 'OUGHTOUGHTABLE',
                 @o_id          = 3456,
                 @o_entry_d = getdate(),
                 @o_carrier_id = 1

          select @ol_cnt = (rand() * 11) + 5
          SET ROWCOUNT @ol_cnt

          select
                   ol_supply_w_id,
                   ol_i_id,
                 ol_quantity,
                 ol_amount,
                 ol_delivery_d
          from order_line_null

          select @c_id,
             @c_last,
             @c_first,
             @c_middle,
             @o_entry_d,
             @o_carrier_id,
             @c_balance,
             @o_id


GO

create proc tpcc_payment @w_id           smallint,
                                                                    @c_w_id
smallint,
                                                                    @h_amount
numeric(6,2),
                                                                    @d_id
tinyint,
```

```
                                                                    @c_d_id
tinyint,
                                                                    @c_id           int,
                                                                    @c_last
char(16) = ''

as
declare  @w_street_1     char(20),
         @w_street_2     char(20),
         @w_city         char(20),
         @w_state        char(2),
         @w_zip          char(9),
         @w_name         char(10),
         @d_street_1     char(20),
         @d_street_2     char(20),
         @d_city         char(20),
         @d_state        char(2),
         @d_zip          char(9),
         @d_name         char(10),
         @c_first        char(16),
         @c_middle       char(2),
         @c_street_1     char(20),
         @c_street_2     char(20),
         @c_city         char(20),
         @c_state        char(2),
         @c_zip          char(9),
         @c_phone        char(16),
         @c_since        datetime,
         @c_credit       char(2),
         @c_credit_lim   numeric(12,2),
         @c_balance      numeric(12,2),
         @c_discount     numeric(4,4),
         @data           char(500),
         @c_data         char(500),
         @datetime       datetime,
         @w_ytd          numeric(12,2),
         @d_ytd          numeric(12,2),
         @cnt            smallint,
         @val            smallint,
         @screen_data          char(200),
                     @d_id_local         tinyint,
                     @w_id_local         smallint,
                     @c_id_local         int

declare @delaytime varchar(30)

    -- uniform random delay of 0 - 0.3 second; avg = 0.15
    select @delaytime = '00:00:0' + cast(cast((rand()*0.30) as decimal(4,3)) as
char(5))
    waitfor delay @delaytime

    select @screen_data = ''


--  get customer info and update balances

           select
                     @d_street_1 = 'rqSHHakqyV',
                     @d_street_2 = 'zZ98nW3BR2s',
                     @d_city     = 'ArNr4GNFV9',
                     @d_state    = 'aV',
                     @d_zip      = '453511111'
```


©2005 Hewlett-Packard Company. All rights reserved.

```
--  get warehouse data and update year-to-date

          select
                    @w_street_1 = 'rqSHHakqyV',
                    @w_street_2 = 'zZ98nW3BR2s',
                    @w_city     = 'ArNr4GNFV9',
                    @w_state    = 'aV',
                    @w_zip      = '453511111'

          select
                    @c_id            = 123,
                    @c_balance     = -10000.00,
                    @c_first       = 'KmR03Xureb',
                    @c_middle      = 'OE',
                    @c_last        = 'BAROUGHTBAR',
                    @c_street_1    = 'QpGdOHjv8mR9vNI8V',
                    @c_street_2    = 'dzKoCObBqbC3yu',
                    @c_city        = 'zAKZXdC037FQxq',
                    @c_state       = 'QA',
                    @c_zip         = '700311111',
                    @c_phone       = '2967264064528555',
                    @c_credit      = 'GC',
                    @c_credit_lim  = 50000.00,
                    @c_discount    = 0.3069,
                    @c_since       = getdate(),
                    @datetime      = getdate()


--  return data to client

select  @c_id,
                    @c_last,
                    @datetime,
                    @w_street_1,
                    @w_street_2,
                    @w_city,
                    @w_state,
                    @w_zip,
                    @d_street_1,
                    @d_street_2,
                    @d_city,
                    @d_state,
                    @d_zip,
                    @c_first,
                    @c_middle,
                    @c_street_1,
                    @c_street_2,
                    @c_city,
                    @c_state,
                    @c_zip,
                    @c_phone,
                    @c_since,
                    @c_credit,
                    @c_credit_lim,
                    @c_discount,
                    @c_balance,
                    @screen_data


GO

create proc tpcc_stocklevel   @w_id               smallint,
                                                  @d_id
          tinyint,
                                                  @threshhold
          smallint
as

declare @delaytime varchar(30)

    -- uniform random delay of 0 - 3.6 second; avg = 1.8
    select @delaytime = '00:00:0' + cast(cast((rand()*3.60) as decimal(4,3)) as
char(5))
    waitfor delay @delaytime

    select 49

GO

create proc tpcc_version
as
declare @version    char(8)

begin
          select @version = '4.10.000'
          select @version as 'Version'
end

GO

CREATE TABLE order_line_null (
          [ol_i_id] [int] NOT NULL ,
          [ol_supply_w_id] [smallint] NOT NULL ,
          [ol_delivery_d] [datetime] NOT NULL ,
          [ol_quantity] [smallint] NOT NULL ,
          [ol_amount] [numeric](6, 2) NOT NULL
) ON [PRIMARY]
GO

insert into order_line_null values ( 101, 1, getdate(), 1, 123.45 )
insert into order_line_null values ( 102, 1, getdate(), 2, 123.45 )
insert into order_line_null values ( 103, 1, getdate(), 3, 123.45 )
insert into order_line_null values ( 104, 1, getdate(), 4, 123.45 )
insert into order_line_null values ( 105, 1, getdate(), 5, 123.45 )
insert into order_line_null values ( 106, 1, getdate(), 1, 123.45 )
insert into order_line_null values ( 107, 1, getdate(), 2, 123.45 )
insert into order_line_null values ( 108, 1, getdate(), 3, 123.45 )
insert into order_line_null values ( 109, 1, getdate(), 4, 123.45 )
insert into order_line_null values ( 110, 1, getdate(), 5, 123.45 )
insert into order_line_null values ( 111, 1, getdate(), 1, 123.45 )
insert into order_line_null values ( 112, 1, getdate(), 2, 123.45 )
insert into order_line_null values ( 113, 1, getdate(), 3, 123.45 )
insert into order_line_null values ( 114, 1, getdate(), 4, 123.45 )
insert into order_line_null values ( 115, 1, getdate(), 5, 123.45 )

GO
```

ordstat.sql

```
--  File:     ORDSTAT.SQL
--            Microsoft TPC-C Benchmark Kit Ver. 4.22
--            Copyright Microsoft, 2001
--  Purpose:  Creates order status transaction stored procedure
--
```


©2005 Hewlett-Packard Company. All rights reserved.

```
--        Interface Level: 4.10.000

use tpcc
go

if exists ( select name from sysobjects where name = "tpcc_orderstatus" )
          drop procedure   tpcc_orderstatus
go

create proc tpcc_orderstatus  @w_id     smallint,
                                        @d_id     tinyint,

                                        @c_id     int,
                                        @c_last   char(16) = ""

as

declare @c_balance            numeric(12,2),
        @c_first              char(16),
        @c_middle             char(2),
        @o_id                           int,
        @o_entry_d            datetime,
        @o_carrier_id                   smallint,
        @cnt                            smallint

begin tran o

if (@c_id = 0)
          begin

--  get customer id and info using last name

                    select    @cnt      = (count(*)+1)/2
                    from      customer (repeatableread)
                    where     c_last    = @c_last and
                              c_w_id    = @w_id and
                              c_d_id    = @d_id

                    set       rowcount @cnt

                    select    @c_id                = c_id,
                              @c_balance           = c_balance,
                                 @c_first          = c_first,
                                 @c_last           = c_last,
                                 @c_middle         = c_middle
                    from      customer (repeatableread)
                    where     c_last               = @c_last and
                              c_w_id               = @w_id and
                              c_d_id               = @d_id
                    order     by c_w_id, c_d_id, c_last, c_first

                    set       rowcount 0
          end

          else

          begin

--  get customer info if by id

                    select    @c_balance           = c_balance,
                              @c_first  = c_first,
                              @c_middle = c_middle,
                              @c_last             = c_last
                    from      customer (repeatableread)
                    where     c_id                = @c_id and
                              c_d_id              = @d_id and
                              c_w_id              = @w_id

                    select    @cnt      = @@rowcount

          end

--  if no such customer

          if (@cnt = 0)
          begin
                    raiserror("Customer not found",18,1)
                    goto custnotfound
          end

--  get order info

          select    @o_id               = o_id,
                    @o_entry_d          = o_entry_d,
                    @o_carrier_id       = o_carrier_id
          from      orders (serializable)
          where     o_c_id              = @c_id and
                    o_d_id              = @d_id and
                    o_w_id              = @w_id
          order     by o_id asc

--  select order lines for the current order

          select    ol_supply_w_id,
                    ol_i_id,
                    ol_quantity,
                    ol_amount,
                    ol_delivery_d
          from      order_line (repeatableread)
          where     ol_o_id = @o_id and
                    ol_d_id = @d_id and
                    ol_w_id = @w_id

custnotfound:

commit tran o

--  return data to client

select    @c_id,
          @c_last,
          @c_first,
          @c_middle,
          @o_entry_d,
          @o_carrier_id,
          @c_balance,
          @o_id

go
```

payment.sql

```
--  File:     PAYMENT.SQL
--            Microsoft TPC-C Benchmark Kit Ver. 4.22
```


©2005 Hewlett-Packard Company. All rights reserved.

```
--            Copyright Microsoft, 2001
--  Purpose:  Creates payment transaction stored procedure
--
--        Interface Level: 4.10.000

use tpcc
go

if exists (select name from sysobjects where name = "tpcc_payment" )
          drop procedure tpcc_payment
go

create proc tpcc_payment      @w_id           smallint,
                                        @c_w_id         smallint,
                                        @h_amount       numeric(6,2),
                                        @d_id           tinyint,
                                        @c_d_id         tinyint,
                                        @c_id           int,
                                        @c_last         char(16) = ""



as
declare  @w_street_1     char(20),
         @w_street_2     char(20),
         @w_city         char(20),
         @w_state        char(2),
         @w_zip          char(9),
         @w_name         char(10),
         @d_street_1     char(20),
         @d_street_2     char(20),
         @d_city         char(20),
         @d_state        char(2),
         @d_zip          char(9),
         @d_name         char(10),
         @c_first        char(16),
         @c_middle       char(2),
         @c_street_1     char(20),
         @c_street_2     char(20),
         @c_city         char(20),
         @c_state        char(2),
         @c_zip          char(9),
         @c_phone        char(16),
         @c_since        datetime,
         @c_credit       char(2),
         @c_credit_lim   numeric(12,2),
         @c_balance      numeric(12,2),
         @c_discount     numeric(4,4),
         @data           char(500),
         @c_data         char(500),
         @datetime       datetime,
         @w_ytd          numeric(12,2),
         @d_ytd          numeric(12,2),
         @cnt            smallint,
         @val            smallint,
         @screen_data          char(200),
           @d_id_local         tinyint,
           @w_id_local         smallint,
           @c_id_local         int

select @screen_data = ""

begin tran p

--  get payment date

          select    @datetime = getdate()

          if (@c_id = 0)
          begin

--  get customer id and info using last name

                    select    @cnt      = count(*)
                    from      customer (repeatableread)
                    where     c_last    = @c_last and
                              c_w_id    = @c_w_id and
                              c_d_id    = @c_d_id


                    select    @val = (@cnt + 1) / 2
                    set       rowcount @val

                    select    @c_id     = c_id
                    from      customer (repeatableread)
                    where     c_last    = @c_last and
                              c_w_id    = @c_w_id and
                              c_d_id    = @c_d_id
                    order     by c_last, c_first

                    set       rowcount 0
          end

--  get customer info and update balances

          update    customer
          set       @c_balance          = c_balance         = c_balance - @h_amount,
                    c_payment_cnt       = c_payment_cnt + 1,
                    c_ytd_payment       = c_ytd_payment + @h_amount,
                    @c_first  = c_first,
                    @c_middle = c_middle,
                    @c_last             = c_last,
                    @c_street_1         = c_street_1,
                    @c_street_2         = c_street_2,
                    @c_city             = c_city,
                    @c_state  = c_state,
                    @c_zip              = c_zip,
                    @c_phone  = c_phone,
                    @c_credit = c_credit,
                    @c_credit_lim       = c_credit_lim,
                    @c_discount         = c_discount,
                    @c_since  = c_since,
                    @data               = c_data,
                    @c_id_local         = c_id
          where     c_id                = @c_id and
                    c_w_id              = @c_w_id and
                    c_d_id              = @c_d_id

--  if customer has bad credit get some more info

          if (@c_credit = "BC")
          begin

--        compute new info

                    select @c_data      = convert(char(5),@c_id) +
                                          convert(char(4),@c_d_id) +
```


©2005 Hewlett-Packard Company. All rights reserved.

```
                                        convert(char(5),@c_w_id) +
                                        convert(char(4),@d_id) +
                                        convert(char(5),@w_id) +
                                        convert(char(19),@h_amount) +
                                        substring(@data, 1, 458)

--  update customer info

                    update    customer
                    set       c_data    = @c_data
                    where     c_id      = @c_id and
                              c_w_id    = @c_w_id and
                              c_d_id    = @c_d_id

                    select    @screen_data = substring (@c_data,1,200)
          end

--  get district data and update year-to-date

          update    district
          set       d_ytd               = d_ytd + @h_amount,
                    @d_street_1         = d_street_1,
                    @d_street_2         = d_street_2,
                    @d_city             = d_city,
                    @d_state  = d_state,
                    @d_zip              = d_zip,
                    @d_name             = d_name,
                    @d_id_local         = d_id
          where     d_w_id              = @w_id and
                    d_id                = @d_id

--  get warehouse data and update year-to-date

          update    warehouse
          set       w_ytd               = w_ytd + @h_amount,
                    @w_street_1         = w_street_1,
                    @w_street_2         = w_street_2,
                    @w_city             = w_city,
                    @w_state  = w_state,
                    @w_zip              = w_zip,
                    @w_name             = w_name,
                    @w_id_local         = w_id
          where     w_id                = @w_id

--  create history record

          insert into history values (  @c_id_local,
                                                  @c_d_id,
                                                  @c_w_id,
                                                  @d_id_local,
                                                  @w_id_local,
                                                  @datetime,
                                                  @h_amount,
                                                  @w_name + "    " + @d_name)
commit tran p

--  return data to client

select    @c_id,
          @c_last,
          @datetime,
          @w_street_1,
          @w_street_2,
          @w_city,
          @w_state,
          @w_zip,
          @d_street_1,
          @d_street_2,
          @d_city,
          @d_state,
          @d_zip,
          @c_first,
          @c_middle,
          @c_street_1,
          @c_street_2,
          @c_city,
          @c_state,
          @c_zip,
          @c_phone,
          @c_since,
          @c_credit,
          @c_credit_lim,
          @c_discount,
          @c_balance,
          @screen_data

go
```

stocklev.sql

```
--  File:     STOCKLEV.SQL
--            Microsoft TPC-C Benchmark Kit Ver. 4.22
--            Copyright Microsoft, 2001
--  Purpose:  Creates stock level transaction stored procedure
--
--        Interface Level: 4.10.000

use tpcc
go

if exists (select name from sysobjects where name = "tpcc_stocklevel" )
          drop procedure tpcc_stocklevel
go

create proc tpcc_stocklevel   @w_id               smallint,
                                        @d_id               tinyint,
                                        @threshhold         smallint
as

declare   @o_id_low int,
          @o_id_high int

select    @o_id_low = (d_next_o_id - 20),
          @o_id_high          = (d_next_o_id - 1)
from      district
where     d_w_id              = @w_id and
          d_id                = @d_id

select    count(distinct(s_i_id))
from      stock, order_line
where     ol_w_id             =  @w_id and
          ol_d_id             =  @d_id and
          ol_o_id                between @o_id_low and
                                 @o_id_high and
          s_w_id              =  ol_w_id and
```


©2005 Hewlett-Packard Company. All rights reserved.

```
        s_i_id              =  ol_i_id and
        s_quantity          <  @threshhold

go
```

getargs.c

```
//      File:               GETARGS.C
//                                  Microsoft TPC-C Kit Ver. 4.22
//                                  Copyright Microsoft, 1996, 1997, 1998, 1999,
2000, 2001
//      Purpose:  Source file for command line processing


// Includes
#include "tpcc.h"

//=====================================================================
//
// Function name: GetArgsLoader
//
//=====================================================================

void GetArgsLoader(int argc, char **argv, TPCCLDR_ARGS *pargs)
{
    int             i;
    char  *ptr;

#ifdef DEBUG
    printf("[%ld]DBG: Entering GetArgsLoader()\n", (int) GetCurrentThreadId());
#endif

    /* init args struct with some useful values */
    pargs->server                       =  SERVER;
    pargs->user                         =  USER;
    pargs->password                     =  PASSWORD;
    pargs->database                     =  DATABASE;
    pargs->batch                        =  BATCH;
    pargs->num_warehouses               =  UNDEF;
          pargs->tables_all                     =  TRUE;
          pargs->table_item                     =  FALSE;
          pargs->table_warehouse                =  FALSE;
          pargs->table_customer                 =  FALSE;
          pargs->table_orders                   =  FALSE;
          pargs->loader_res_file                =  LOADER_RES_FILE;
          pargs->pack_size                      =  DEFLDPACKSIZE;
          pargs->starting_warehouse     =  DEF_STARTING_WAREHOUSE;
          pargs->build_index                    =  BUILD_INDEX;
          pargs->index_order                    =  INDEX_ORDER;
          pargs->index_script_path      =  INDEX_SCRIPT_PATH;
          pargs->scale_down                     =  SCALE_DOWN;

    /* check for zero command line args */
    if ( argc == 1 )
                GetArgsLoaderUsage();

    for (i = 1; i < argc; ++i)
    {
                if (argv[i][0] != '-' && argv[i][0] != '/')
                {
                printf("\nUnrecognized command");
                GetArgsLoaderUsage();
                exit(1);
                }

                ptr = argv[i];

                switch (ptr[1])
                {
                case 'h':     /* Fall throught */
                case 'H':
                            GetArgsLoaderUsage();
                            break;

                case 'D':
                            pargs->database = ptr+2;
                            break;

                case 'P':
                            pargs->password = ptr+2;
                            break;

                case 'S':
                            pargs->server = ptr+2;
                            break;

                case 'U':
                            pargs->user = ptr+2;
                            break;

                case 'b':
                            pargs->batch = atol(ptr+2);
                            break;

                case 'W':
                            pargs->num_warehouses = atol(ptr+2);
                            break;

                case 's':
                            pargs->starting_warehouse = atol(ptr+2);
                            break;

                case 't':
                            {
                                      pargs->tables_all = FALSE;
                                      if (strcmp(ptr+2,"item") == 0)
                                                pargs->table_item =
TRUE;
                                      else if (strcmp(ptr+2,"warehouse")
== 0)
                                                pargs->table_warehouse =
TRUE;
                                      else if (strcmp(ptr+2,"customer")
== 0)
                                                pargs->table_customer =
TRUE;
                                      else if (strcmp(ptr+2,"orders") ==
0)
                                                pargs->table_orders =
TRUE;
                                      else
                                      {
                                      printf("\nUnrecognized command");
                                      GetArgsLoaderUsage();
```


©2005 Hewlett-Packard Company. All rights reserved.

```
                                        exit(1);
                                        }

                                        break;
                                }

                        case 'f':
                                pargs->loader_res_file = ptr+2;
                                break;

                        case 'p':
                                pargs->pack_size = atol(ptr+2);
                                break;

                        case 'i':
                                pargs->build_index = atol(ptr+2);
                                break;

                        case 'o':
                                pargs->index_order = atol(ptr+2);
                                break;

                        case 'c':
                                pargs->scale_down = atol(ptr+2);
                                break;

                case 'd':
                                pargs->index_script_path = ptr+2;
                                break;

                default:
                        GetArgsLoaderUsage();
                        exit(-1);
                        break;
                }
    }

    /* check for required args */
    if (pargs->num_warehouses == UNDEF )
    {
                printf("Number of Warehouses is required\n");
                exit(-2);
    }

    return;
}


//==========================================================================
//
// Function name: GetArgsLoaderUsage
//
//==========================================================================

void GetArgsLoaderUsage()
{

#ifdef DEBUG
    printf("[%ld]DBG: Entering GetArgsLoaderUsage()\n", (int) GetCurrentThreadId());
#endif


    printf("TPCCLDR:\n\n");
            printf("Parameter                                                    Default\n");
            printf("-------------------------------------------------------------
\n");
    printf("-W Number of Warehouses to Load                      Required \n");
    printf("-S Server                                            %s\n", SERVER);
    printf("-U Username                                          %s\n", USER);
    printf("-P Password                                          %s\n", PASSWORD);
    printf("-D Database                                          %s\n", DATABASE);
            printf("-b Batch Size                                        %ld\n",
(long) BATCH);
            printf("-p TDS packet size                                   %ld\n",
(long) DEFLDPACKSIZE);
            printf("-f Loader Results Output Filename                    %s\n",
LOADER_RES_FILE);
            printf("-s Starting Warehouse                                %ld\n",
(long) DEF_STARTING_WAREHOUSE);
            printf("-i Build Option (data = 0, data and index = 1)       %ld\n",
(long) BUILD_INDEX);
            printf("-o Cluster Index Build Order (before = 1, after = 0)  %ld\n",
(long) INDEX_ORDER);
            printf("-c Build Scaled Database (normal = 0, tiny = 1)      %ld\n",
(long) SCALE_DOWN);
            printf("-d Index Script Path                                 %s\n",
INDEX_SCRIPT_PATH);
            printf("-t Table to Load                                     all tables
\n");
    printf("   [item|warehouse|customer|orders]\n");
    printf("   Notes: \n");
    printf("     - the '-t' parameter may be included multiple times to \n");
    printf("       specify multiple tables to be loaded \n");
    printf("     - 'item' loads ITEM table \n");
    printf("     - 'warehouse' loads WAREHOUSE, DISTRICT, and STOCK tables \n");
    printf("     - 'customer' loads CUSTOMER and HISTORY tables \n");
    printf("     - 'orders' load NEW-ORDER, ORDERS, ORDER-LINE tables \n");

            printf("\nNote:  Command line switches are case sensitive.\n");

    exit(0);
}
```

random.c

```
//        File:               RANDOM.C
//                                      Microsoft TPC-C Kit Ver. 4.22
//                                      Copyright Microsoft, 1996, 1997, 1998, 1999,
2000, 2001
//        Purpose:  Random number generation routines for database loader


// Includes
#include "tpcc.h"
#include "math.h"

// Defines
#define A            16807
#define M       2147483647
#define Q           127773      /* M div A */
#define R             2836      /* M mod A */
#define Thread      __declspec(thread)
```


©2005 Hewlett-Packard Company. All rights reserved.

```
// Globals
long      Thread Seed = 0;       /* thread local seed */

/*****************************************************************************
*                                                                            *
* random -                                                                   *
*       Implements a GOOD pseudo random number generator.  This generator    *
*       will/should? run the complete period before repeating.               *
*                                                                            *
* Copied from:                                                               *
*       Random Numbers Generators: Good Ones Are Hard to Find.               *
*       Communications of the ACM - October 1988 Volume 31 Number 10         *
*                                                                            *
* Machine Dependencies:                                                      *
*       long must be 2 ^ 31 - 1 or greater.                                   *
*                                                                            *
*****************************************************************************/

/*****************************************************************************
* seed - load the Seed value used in irand and drand.  Should be used before *
*       first call to irand or drand.                                        *
*****************************************************************************/

void seed(long val)
{

#ifdef DEBUG
    printf("[%ld]DBG: Entering seed()...\n", (int) GetCurrentThreadId());
            printf("Old Seed %ld New Seed %ld\n",Seed, val);
#endif

    if ( val < 0 )
               val = abs(val);

    Seed = val;

}


/*****************************************************************************
*                                                                            *
* irand - returns a 32 bit integer pseudo random number with a period of     *
*       1 to 2 ^ 32 - 1.                                                     *
*                                                                            *
* parameters:                                                                *
*       none.                                                                *
*                                                                            *
* returns:                                                                   *
*       32 bit integer - defined as long ( see above ).                       *
*                                                                            *
* side effects:                                                              *
*       seed get recomputed.                                                 *
*****************************************************************************/

long irand()
{
    register long    s;      /* copy of seed */
    register long    test;   /* test flag */
    register long    hi;     /* tmp value for speed */
    register long    lo;     /* tmp value for speed */

#ifdef DEBUG
    printf("[%ld]DBG: Entering irand()...\n", (int) GetCurrentThreadId());
#endif

    s = Seed;
    hi = s / Q;
    lo = s % Q;

    test = A * lo - R * hi;
    if ( test > 0 )
                    Seed = test;
    else
                    Seed = test + M;

    return( Seed );
}


/*****************************************************************************
*                                                                            *
* drand - returns a double pseudo random number between 0.0 and 1.0.         *
*       See irand.                                                           *
*****************************************************************************/
double drand()
{

#ifdef DEBUG
    printf("[%ld]DBG: Entering drand()...\n", (int) GetCurrentThreadId());
#endif

    return( (double)irand() / 2147483647.0);
}


//=====================================================================
// Function   : RandomNumber
//
// Description:
//=====================================================================
long RandomNumber(long lower, long upper)
{
    long rand_num;

#ifdef DEBUG
    printf("[%ld]DBG: Entering RandomNumber()...\n", (int) GetCurrentThreadId());
#endif

           if ( upper == lower )         /* pgd 08-13-96 perf enhancement */
                    return lower;

           upper++;

    if ( upper <= lower )
                    rand_num = upper;
    else
                    rand_num = lower + irand() % (upper - lower); /* pgd 08-13-96
perf enhancement */


#ifdef DEBUG
    printf("[%ld]DBG: RandomNumber between %ld & %ld ==> %ld\n",
                                        (int) GetCurrentThreadId(), lower, upper,
rand_num);
#endif
```


©2005 Hewlett-Packard Company. All rights reserved.

```
    return rand_num;
}


#if 0

//Orginal code pgd 08/13/96

long RandomNumber(long lower,
                                        long upper)
{
    long rand_num;

#ifdef DEBUG
    printf("[%ld]DBG: Entering RandomNumber()...\n", (int) GetCurrentThreadId());
#endif

          upper++;

    if ((upper <= lower))
                    rand_num = upper;
    else
                    rand_num = lower + irand() % ((upper > lower) ? upper - lower :
upper);


#ifdef DEBUG
    printf("[%ld]DBG: RandomNumber between %ld & %ld ==> %ld\n",
                                       (int) GetCurrentThreadId(), lower, upper,
rand_num);
#endif


    return rand_num;
}
#endif

//=====================================================================
// Function   : NURand
//
// Description:
//=====================================================================
long NURand(int iConst,
              long x,
              long y,
              long C)
{
    long rand_num;

#ifdef DEBUG
    printf("[%ld]DBG: Entering NURand()...\n", (int) GetCurrentThreadId());
#endif

    rand_num = (((RandomNumber(0,iConst) | RandomNumber(x,y)) + C) % (y-x+1))+x;

#ifdef DEBUG
    printf("[%ld]DBG: NURand: num = %d\n", (int) GetCurrentThreadId(), rand_num);
#endif

    return rand_num;
}
```

strings.c

```
//        File:               STRINGS.C
//                                    Microsoft TPC-C Kit Ver. 4.22
//                                    Copyright Microsoft, 1996, 1997, 1998, 1999,
2000, 2001
//        Purpose:  Source file for database loader string functions


// Includes
#include "tpcc.h"
#include <string.h>
#include <ctype.h>

//=====================================================================
//
// Function name: MakeAddress
//
//=====================================================================

void MakeAddress(char *street_1,
                                         char *street_2,
                                         char *city,
                                         char *state,
                                         char *zip)
{

#ifdef DEBUG
    printf("[%ld]DBG: Entering MakeAddress()\n", (int) GetCurrentThreadId());
#endif

    MakeAlphaString (10, 20, ADDRESS_LEN, street_1);
    MakeAlphaString (10, 20, ADDRESS_LEN, street_2);
    MakeAlphaString (10, 20, ADDRESS_LEN, city);
    MakeAlphaString ( 2,  2, STATE_LEN, state);
    MakeZipNumberString( 9,  9, ZIP_LEN, zip);

#ifdef DEBUG
    printf("[%ld]DBG: MakeAddress: street_1: %s, street_2: %s, city: %s, state: %s,
zip: %s\n",
                                 (int) GetCurrentThreadId(), street_1, street_2, city,
state, zip);
#endif

    return;

}


//=====================================================================
//
// Function name: LastName
//
//=====================================================================

void LastName(int  num,
                           char *name)
{
    static char *n[] =
    {
```


©2005 Hewlett-Packard Company. All rights reserved.

```
                    "BAR" , "OUGHT", "ABLE" , "PRI"  , "PRES",
                    "ESE" , "ANTI" , "CALLY", "ATION", "EING"
    };

#ifdef DEBUG
    printf("[%ld]DBG: Entering LastName()\n", (int) GetCurrentThreadId());
#endif

    if ((num >= 0) && (num < 1000))
    {
                    strcpy(name, n[(num/100)%10]);
                    strcat(name, n[(num/10)%10]);
                    strcat(name, n[(num/1)%10]);

                    if (strlen(name) < LAST_NAME_LEN)
                    {
                              PaddString(LAST_NAME_LEN, name);
                    }

    }
    else
    {
                    printf("\nError in LastName()... num <%ld> out of range
(0,999)\n", num);
                    exit(-1);
    }


#ifdef DEBUG
    printf("[%ld]DBG: LastName: num = [%d] ==> [%d][%d][%d]\n",
                              (int) GetCurrentThreadId(), num, num/100, (num/10)%10,
num%10);
          printf("[%ld]DBG: LastName: String = %s\n", (int) GetCurrentThreadId(),
name);
#endif

    return;

}


//=====================================================================
//
// Function name: MakeAlphaString
//
//=====================================================================

//philipdu 08/13/96 Changed MakeAlphaString to use A-Z, a-z, and 0-9 in
//accordance with spec see below:
//The spec says:
//4.3.2.2 The notation random a-string [x .. y]
//(respectively, n-string [x .. y]) represents a string of random alphanumeric
//(respectively, numeric) characters of a random length of minimum x, maximum y,
//and mean (y+x)/2. Alphanumerics are A..Z, a..z, and 0..9.  The only other
//requirement is that the character set used "must be able to represent a minimum
//of 128 different characters".  We are using 8-bit chars, so this is a non issue.
//It is completely unreasonable to stuff non-printing chars into the text fields.
//-CLevine 08/13/96

int MakeAlphaString( int  x, int  y, int  z, char *str)
{
          int                 len;
          int                 i;
    char    cc = 'a';
          static    char chArray[] =
"0123456789ABCDEFGHIJKLMNOPQRSTUVWXYZabcdefghijklmnopqrstuvwxyz";
          static    int       chArrayMax = 61;

#ifdef DEBUG
    printf("[%ld]DBG: Entering MakeAlphaString()\n", (int) GetCurrentThreadId());
#endif

          len= RandomNumber(x, y);

          for (i=0; i<len; i++)
          {
                    cc = chArray[RandomNumber(0, chArrayMax)];
        str[i] = cc;
    }
          if ( len < z )
                    memset(str+len, ' ', z - len);
          str[len] = 0;

    return len;
}


//=====================================================================
//
// Function name: MakeOriginalAlphaString
//
//=====================================================================

int MakeOriginalAlphaString(int  x,
                                                                  int  y,
                                                                       int  z,
                                                                  char *str,
                                                              int  percent)
{
    int             len;
    int             val;
    int             start;

#ifdef DEBUG
    printf("[%ld]DBG: Entering MakeOriginalAlphaString()\n", (int)
GetCurrentThreadId());
#endif

    // verify prercentage is valid
    if ((percent < 0) || (percent > 100))
    {
                    printf("MakeOrigianlAlphaString: Invalid percentage: %d\n",
percent);
                    exit(-1);
    }

    // verify string is at least 8 chars in length
    if ((x + y) <= 8)
    {
                    printf("MakeOriginalAlphaString: string length must be >= 8\n");
                    exit(-1);
    }

    // Make Alpha String
    len = MakeAlphaString(x,y, z, str);
```


©2005 Hewlett-Packard Company. All rights reserved.

```
    val = RandomNumber(1,100);
    if (val <= percent)
    {
                    start = RandomNumber(0, len - 8);
                    strncpy(str + start, "ORIGINAL", 8);
    }


#ifdef DEBUG
    printf("[%ld]DBG: MakeOriginalAlphaString: : %s\n",
                              (int) GetCurrentThreadId(), str);
#endif

    return strlen(str);
}


//=====================================================================
//
// Function name: MakeNumberString
//
//=====================================================================
int MakeNumberString(int  x, int  y, int  z, char *str)
{
          char tmp[16];

          //MakeNumberString is always called MakeZipNumberString(16, 16, 16,
string)

          memset(str, '0', 16);
          itoa(RandomNumber(0, 99999999), tmp, 10);
          memcpy(str, tmp, strlen(tmp));

          itoa(RandomNumber(0, 99999999), tmp, 10);
          memcpy(str+8, tmp, strlen(tmp));

          str[16] = 0;

    return 16;
}


//=====================================================================
//
// Function name: MakeZipNumberString
//
//=====================================================================
int MakeZipNumberString(int  x, int  y, int  z, char *str)
{
          char tmp[16];

          //MakeZipNumberString is always called MakeZipNumberString(9, 9, 9,
string)

          strcpy(str, "000011111");

          itoa(RandomNumber(0, 9999), tmp, 10);
          memcpy(str, tmp, strlen(tmp));

    return 9;
}
```

```
//=====================================================================
//
// Function name: InitString
//
//=====================================================================
void InitString(char *str, int len)
{
#ifdef DEBUG
    printf("[%ld]DBG: Entering InitString()\n", (int) GetCurrentThreadId());
#endif

          memset(str, ' ', len);
    str[len] = 0;
}


//=====================================================================
// Function name: InitAddress
//
// Description:
//
//=====================================================================

void InitAddress(char *street_1, char *street_2, char *city, char *state, char *zip)
{
          memset(street_1, ' ', ADDRESS_LEN+1);
          memset(street_2, ' ', ADDRESS_LEN+1);
          memset(city, ' ', ADDRESS_LEN+1);

    street_1[ADDRESS_LEN+1] = 0;
    street_2[ADDRESS_LEN+1] = 0;
    city[ADDRESS_LEN+1]     = 0;

          memset(state, ' ', STATE_LEN+1);
    state[STATE_LEN+1] = 0;

          memset(zip, ' ', ZIP_LEN+1);
    zip[ZIP_LEN+1] = 0;
}


//=====================================================================
//
// Function name: PaddString
//
//=====================================================================

void PaddString(int max, char *name)
{
          int                len;

          len = strlen(name);
          if ( len < max )
                    memset(name+len, ' ', max - len);
          name[max] = 0;

          return;
}
```

time.c

```
//        File:               TIME.C
```


©2005 Hewlett-Packard Company. All rights reserved.

```
//                                      Microsoft TPC-C Kit Ver. 4.22
//                                      Copyright Microsoft, 1996, 1997, 1998, 1999,
2000, 2001
//        Purpose:  Source file for time functions


// Includes
#include "tpcc.h"

// Globals
static long start_sec;


//=====================================================================
//
// Function name: TimeNow
//
//=====================================================================

long TimeNow()
{
   long             time_now;
   struct _timeb el_time;

#ifdef DEBUG
    printf("[%ld]DBG: Entering TimeNow()\n", (int) GetCurrentThreadId());
#endif

   _ftime(&el_time);

   time_now = ((el_time.time - start_sec) * 1000) + el_time.millitm;

   return time_now;
}
```

tpcc.h

```
//        File:                 TPCC.H
//                                      Microsoft TPC-C Kit Ver. 4.22
//                                      Copyright Microsoft, 1996, 1997, 1998, 1999,
2000, 2001
//        Purpose:  Header file for TPC-C database loader


// Build number of TPC Benchmark Kit
#define TPCKIT_VER  "4.22"

// General headers
#include <windows.h>
#include <winbase.h>
#include <stdlib.h>
#include <stdio.h>
#include <process.h>
#include <stddef.h>
#include <stdarg.h>
#include <string.h>
#include <time.h>
#include <sys\timeb.h>
#include <sys\types.h>

// ODBC headers
#include <sql.h>
#include <sqlext.h>
#include <odbcss.h>

// General constants
#define MILLI                           1000
#define FALSE                                   0
#define TRUE                                    1
#define UNDEF                                                   -1
#define MINPRINTASCII                              32
#define MAXPRINTASCII                             126

// Default environment constants
#define SERVER                                  ""
#define DATABASE                                "tpcc"
#define USER                                    "sa"
#define PASSWORD                          ""

// Default loader arguments
#define BATCH                           10000
#define DEFLDPACKSIZE                           32768
#define LOADER_RES_FILE                   "logs\\load.out"
#define LOADER_NURAND_C                             123
#define DEF_STARTING_WAREHOUSE                  1
#define BUILD_INDEX                                     1         // build both
data and indexes
#define INDEX_ORDER                                     1         // build
indexes before load
#define SCALE_DOWN                                      0   // build a normal
scale database
#define INDEX_SCRIPT_PATH     "scripts"

typedef struct
{
    char                                        *server;
    char                                        *database;
    char                                        *user;
    char                                        *password;
          BOOL                                  tables_all;
          // set if loading all tables
          BOOL                                  table_item;
          // set if loading ITEM table specifically
          BOOL                                  table_warehouse;    // set if
loading WAREHOUSE, DISTRICT, and STOCK
          BOOL                                  table_customer;               //
set if loading CUSTOMER and HISTORY
          BOOL                                  table_orders;                 //
set if loading NEW-ORDER, ORDERS, ORDER-LINE
    long                                        num_warehouses;
    long                                        batch;
    long                                        verbose;
          long                                  pack_size;
          char                                  *loader_res_file;
          char                                  *synch_servername;
          long                                  case_sensitivity;
          long                                  starting_warehouse;
          long                                  build_index;
          long                                  index_order;
          long                                  scale_down;
          char                                  *index_script_path;
} TPCCLDR_ARGS;
```


©2005 Hewlett-Packard Company. All rights reserved.

```
// String length constants
          #define SERVER_NAME_LEN           20
          #define DATABASE_NAME_LEN         20
          #define USER_NAME_LEN             20
          #define PASSWORD_LEN              20
          #define TABLE_NAME_LEN            20
          #define I_DATA_LEN                50
          #define I_NAME_LEN                24
          #define BRAND_LEN                  1
          #define LAST_NAME_LEN             16
          #define W_NAME_LEN                10
          #define ADDRESS_LEN               20
          #define STATE_LEN                  2
          #define ZIP_LEN                    9
          #define S_DIST_LEN                24
          #define S_DATA_LEN                50
          #define D_NAME_LEN                10
          #define FIRST_NAME_LEN            16
          #define MIDDLE_NAME_LEN            2
          #define PHONE_LEN                 16
          #define CREDIT_LEN                 2
          #define C_DATA_LEN               500
          #define H_DATA_LEN                24
          #define DIST_INFO_LEN             24
          #define MAX_OL_NEW_ORDER_ITEMS    15
          #define MAX_OL_ORDER_STATUS_ITEMS 15
          #define STATUS_LEN                25
          #define OL_DIST_INFO_LEN                   24
          #define C_SINCE_LEN                                   23
          #define H_DATE_LEN                                    23
          #define OL_DELIVERY_D_LEN                  23
          #define O_ENTRY_D_LEN             23


// Functions in random.c
void      seed();
long      irand();
double    drand();
void      WUCreate();
short     WURand();
long      RandomNumber(long lower, long upper);

// Functions in getargs.c;
void      GetArgsLoader();
void      GetArgsLoaderUsage();

// Functions in time.c
long      TimeNow();

// Functions in strings.c
void      MakeAddress();
void      LastName();
int       MakeAlphaString();
int       MakeOriginalAlphaString();
int       MakeNumberString();
int       MakeZipNumberString();
void      InitString();
void      InitAddress();
void      PaddString();
```

tpccldr.c

```
//        File:               TPCCLDR.C
//                                    Microsoft TPC-C Kit Ver. 4.22
//                                    Copyright Microsoft, 2000, 2001
//        Purpose:  Source file for TPC-C database loader


// Includes
#include "tpcc.h"
#include "search.h"

// Defines
#define MAXITEMS                100000
#define MAXITEMS_SCALE_DOWN             100
#define CUSTOMERS_PER_DISTRICT  3000
#define CUSTOMERS_SCALE_DOWN  30
#define DISTRICT_PER_WAREHOUSE  10
#define ORDERS_PER_DISTRICT     3000
#define ORDERS_SCALE_DOWN       30
#define MAX_CUSTOMER_THREADS    2
#define MAX_ORDER_THREADS       3
#define MAX_MAIN_THREADS        4

// Functions declarations

void HandleErrorDBC (SQLHDBC  hdbc1);

void CheckSQL();
void CheckDataBase();

long NURand();
void LoadItem();
void LoadWarehouse();

void Stock();
void District();

void LoadCustomer();
void CustomerBufInit();
void CustomerBufLoad();
void LoadCustomerTable();
void LoadHistoryTable();

void LoadOrders();
void OrdersBufInit();
void OrdersBufLoad();
void LoadOrdersTable();
void LoadNewOrderTable();
void LoadOrderLineTable();
void GetPermutation();
void CheckForCommit();
void OpenConnections();
void BuildIndex();
void FormatDate ();

// Shared memory structures

typedef struct
{
    long                ol;
    long                ol_i_id;
    short               ol_supply_w_id;
    short               ol_quantity;
    double              ol_amount;
```


©2005 Hewlett-Packard Company. All rights reserved.

```
    char                ol_dist_info[DIST_INFO_LEN+1];
          char
          ol_delivery_d[OL_DELIVERY_D_LEN+1];
} ORDER_LINE_STRUCT;

typedef struct
{
    long                o_id;
    short               o_d_id;
    short               o_w_id;
    long                o_c_id;
    short               o_carrier_id;
    short               o_ol_cnt;
    short               o_all_local;
          ORDER_LINE_STRUCT   o_ol[15];
} ORDERS_STRUCT;

typedef struct
{
    long                                c_id;
    short                               c_d_id;
    short                               c_w_id;
          char                                    c_first[FIRST_NAME_LEN+1];
    char                                c_middle[MIDDLE_NAME_LEN+1];
    char                                c_last[LAST_NAME_LEN+1];
    char                                c_street_1[ADDRESS_LEN+1];
    char                                c_street_2[ADDRESS_LEN+1];
    char                                c_city[ADDRESS_LEN+1];
    char                                c_state[STATE_LEN+1];
    char                                c_zip[ZIP_LEN+1];
    char                                c_phone[PHONE_LEN+1];
    char                                c_credit[CREDIT_LEN+1];
    double                                    c_credit_lim;
    double                                    c_discount;
//  fix to avoid ODBC float to numeric conversion problem.
//  double                                    c_balance;
          char                                c_balance[6];

    double                                    c_ytd_payment;
          short                               c_payment_cnt;
          short                               c_delivery_cnt;
          char                                c_data[C_DATA_LEN+1];
          double                              h_amount;
    char                                h_data[H_DATA_LEN+1];
} CUSTOMER_STRUCT;

typedef struct
{
          char                                c_last[LAST_NAME_LEN+1];
          char                                c_first[FIRST_NAME_LEN+1];
    long                                c_id;
} CUSTOMER_SORT_STRUCT;

typedef struct
{
    long                time_start;
} LOADER_TIME_STRUCT;


// Global variables

char      szLastError[300];
```

```
HENV      henv;

HDBC      v_hdbc;                                                   // for SQL
Server version verification
HDBC      i_hdbc1;                                        // for ITEM table
HDBC      w_hdbc1;                                        // for WAREHOUSE,
DISTRICT, STOCK
HDBC      c_hdbc1;                                        // for CUSTOMER
HDBC      c_hdbc2;                                        // for HISTORY
HDBC      o_hdbc1;                                        // for ORDERS
HDBC      o_hdbc2;                                        // for NEW-ORDER

HDBC      o_hdbc3;                                        // for ORDER-LINE

HSTMT     v_hstmt;                                        // for SQL Server
version verification
HSTMT     i_hstmt1;
HSTMT     w_hstmt1;
HSTMT     c_hstmt1, c_hstmt2;
HSTMT     o_hstmt1, o_hstmt2, o_hstmt3;

ORDERS_STRUCT   orders_buf[ORDERS_PER_DISTRICT];
CUSTOMER_STRUCT customer_buf[CUSTOMERS_PER_DISTRICT];
long            orders_rows_loaded;
long            new_order_rows_loaded;
long            order_line_rows_loaded;
long            history_rows_loaded;
long            customer_rows_loaded;
long            stock_rows_loaded;
long            district_rows_loaded;
long            item_rows_loaded;
long            warehouse_rows_loaded;
long            main_time_start;
long            main_time_end;
long                            max_items;
long                            customers_per_district;
long                            orders_per_district;
long                            first_new_order;
long                            last_new_order;


TPCCLDR_ARGS    *aptr, args;


//=====================================================================
//
// Function name: main
//
//=====================================================================

int main(int  argc, char **argv)
{

          DWORD           dwThreadID[MAX_MAIN_THREADS];
          HANDLE          hThread[MAX_MAIN_THREADS];
          FILE            *fLoader;
          char            buffer[255];
          int                                     i;

          for (i=0; i<MAX_MAIN_THREADS; i++)
                    hThread[i] = NULL;

    printf("\n*************************************************");
```


©2005 Hewlett-Packard Company. All rights reserved.

```
	printf("\n*                                                  *");
	printf("\n*  Microsoft SQL Server                           *");
	printf("\n*                                                  *");
	printf("\n*  TPC-C BENCHMARK KIT:  Database loader           *");
	printf("\n*  Version %s                                    *", TPCKIT_VER);
	printf("\n*                                                  *");
	printf("\n*****************************************************\n\n");

// process command line arguments

aptr = &args;
GetArgsLoader(argc, argv, aptr);

	// verify database and tables exist before attempting to load

	CheckSQL();
	CheckDataBase();

	printf("Build interface is ODBC.\n");

	if (aptr->build_index == 0)
		printf("Data load only - no index creation.\n");
	else
		printf("Data load and index creation.\n");

	if (aptr->index_order == 0)
		printf("Clustered indexes will be created after bulk load.\n");
	else
		printf("Clustered indexes will be created before bulk load.\n");

	// set database scale values
	if (aptr->scale_down == 1)
	{
		printf("*** Scaled Down Database ***\n");
		max_items = MAXITEMS_SCALE_DOWN;
		customers_per_district = CUSTOMERS_SCALE_DOWN;
		orders_per_district = ORDERS_SCALE_DOWN;
		first_new_order = 0;
		last_new_order  = 30;
	}
	else
	{
		max_items = MAXITEMS;
		customers_per_district = CUSTOMERS_PER_DISTRICT;
		orders_per_district = ORDERS_PER_DISTRICT;
		first_new_order = 2100;
		last_new_order  = 3000;
	}


	// open connections to SQL Server

	OpenConnections();

	// open file for loader results
fLoader = fopen(aptr->loader_res_file, "w");

if (fLoader == NULL)
	{
		printf("Error, loader result file open failed.");
		exit(-1);
	}

	// start loading data

	sprintf(buffer,"TPC-C load started for %ld warehouses.\n",aptr->num_warehouses);

		printf("%s",buffer);
		fprintf(fLoader,"%s",buffer);

		main_time_start = (TimeNow() / MILLI);

		// start parallel load threads


		if (aptr->tables_all || aptr->table_item)
		{
			fprintf(fLoader, "\nStarting loader threads for: item\n");

			hThread[0] = CreateThread(NULL,
								0,

(LPTHREAD_START_ROUTINE) LoadItem,

NULL,
								0,

&dwThreadID[0]);

			if (hThread[0] == NULL)
			{
				printf("Error, failed in creating creating thread =
0.\n");
				exit(-1);
			}
		}

		if (aptr->tables_all || aptr->table_warehouse)
		{
			fprintf(fLoader, "Starting loader threads for: warehouse\n");

			hThread[1] = CreateThread(NULL,
								0,

(LPTHREAD_START_ROUTINE) LoadWarehouse,

NULL,
								0,

&dwThreadID[1]);

			if (hThread[1] == NULL)
			{
				printf("Error, failed in creating creating thread =
1.\n");
				exit(-1);
			}
		}

		if (aptr->tables_all || aptr->table_customer)
		{
			fprintf(fLoader, "Starting loader threads for: customer\n");

			hThread[2] = CreateThread(NULL,
								0,
```


©2005 Hewlett-Packard Company. All rights reserved.

```
(LPTHREAD_START_ROUTINE) LoadCustomer,

NULL,
                                                                                                                                                                                                                                                                                                                                                                                                                                                                                                                                                                                                                                                                                                                                                                                                                                                                                                                                                                                                                                                                                                                                                                                                                                                                                                                                                                                                                                                                                                                                                                                                                                                                                                                                                                                                                                                                                                                                                                                                                                                                                                                                                                                                                                                                                                                                                                                                                                                                                                                                                                                                                                                                                                                                                                                                                                                                                                                                                                                                                                                                                                                                                                                                                                                                                                                                                                                                                                                                                                                                                                                                                                                                                                                                                                                                                                                                                                                                                                                                                                                                                                                                                                                                                                                                                                                                                                                                                                                                                                                                                                                                                                                                                                                                                                                                                                                                                                                                                                                                                                                                                                                                                                                                                                                                                                                                                                                                                                                                                                                                                                                                                                                                                                                                                                                                                                                                                                                                                                                                                                                                                                                                                                                                                                                                                                                                                                                                                                                                                                                                                                                                                                                                                                                                                                                                                                                                                                                                                                                                                                                                                                                                                                                                                                                                                                                                                                                                                                                                                                
0,

&dwThreadID[2]);

                    if (hThread[2] == NULL)
                    {
                              printf("Error, failed in creating creating main thread
= 2.\n");
                              exit(-1);
                    }
          }

          if (aptr->tables_all || aptr->table_orders)
          {
                    fprintf(fLoader, "Starting loader threads for: orders\n");

                    hThread[3] = CreateThread(NULL,
                                                                                                                                                                                                                                                                                                                                                                                                                                                                                                                                                                                                                                                                                                                                                                                                                                                                                                                                                                                                                                                                                                                                                                                                                                                                                                                                                                                                                                                                                                                                                                                                                                                                                                                                                                                                                                                                                                                                                                                                                                                                                                                                                                                                                                                                                                                                                                                                                                                                                                                                                                                                                                                                                                                                                                                                                                                                                                                                                                                                                                                                                                                                                                                                                                                                                                                                                                                                                                                                                                                                                                                                                                                                                                                                                                                                                                                                                                                                                                                                                                                                                                                                                                                                                                                                                                                                                                                                                                                                                                                                                                                                                                                                                                                                                                                                                                                                                                                                                                                                                                                                                                                                                                                                                                                                                                                                                                                                                                                                                                                                                                                                
0,

(LPTHREAD_START_ROUTINE) LoadOrders,

NULL,
                                                                                                                                                                                                                                                                                                                                                                                                                                                                                                                                                                                                                                                                                                                                                                                                                                                                                                                                                                                                                                                                                                                                                                                                                                                                                                                                                                                                                                                                                                                                                                                                                                                                                                                                                                                                                                                                                                                                                                                                                                                                                                                                                                                                                                                                                                                                                                                                                                                                                                                                                                                                                                                                                                                                                                                                                                                                                                                                                                                                                                                                                                                                                                                                                                                                                                                                                                                                                                                                                                                                                                                                                                                                                                                                                                                                                                                                                                                                                                                                                                                                                                                                                                                                                                                                
0,

&dwThreadID[3]);

                    if (hThread[3] == NULL)
                    {
                              printf("Error, failed in creating creating main thread
= 3.\n");
                              exit(-1);
                    }
          }

          // Wait for threads to finish...
          for (i=0; i<MAX_MAIN_THREADS; i++)
          {
                    if (hThread[i] != NULL)
                    {
                              WaitForSingleObject( hThread[i], INFINITE );
                              CloseHandle(hThread[i]);
                              hThread[i] = NULL;
                    }
          }

          main_time_end = (TimeNow() / MILLI);

    sprintf(buffer,"\nTPC-C load completed successfully in %ld minutes.\n",
                              (main_time_end - main_time_start)/60);

          printf("%s",buffer);
          fprintf(fLoader, "%s", buffer);

          fclose(fLoader);

          SQLFreeEnv(henv);

    exit(0);
```

```
          return 0;
}


//=====================================================================
//
// Function name: LoadItem
//
//=====================================================================

void LoadItem()
{
    long            i_id;
          long                i_im_id;
    char            i_name[I_NAME_LEN+1];
    double                    i_price;
    char            i_data[I_DATA_LEN+1];
          char                name[20];
          long                time_start;
          RETCODE             rc;
          DBINT               rcint;
          char                bcphint[128];

          // Seed with unique number
          seed(1);

          printf("Loading item table...\n");

          // if build index before load
          if ((aptr->build_index == 1) && (aptr->index_order == 1))
                    BuildIndex("idxitmcl");

          InitString(i_name, I_NAME_LEN+1);
          InitString(i_data, I_DATA_LEN+1);

          sprintf(name, "%s..%s", aptr->database, "item");

          rc = bcp_init(i_hdbc1, name, NULL, "logs\\item.err", DB_IN);
          if (rc != SUCCEED)
                    HandleErrorDBC(i_hdbc1);

          if ((aptr->build_index == 1) && (aptr->index_order == 1))
          {
                    sprintf(bcphint, "tablock, order (i_id), ROWS_PER_BATCH =
100000");
                    rc = bcp_control(i_hdbc1, BCPHINTS, (void*) bcphint);
                    if (rc != SUCCEED)
                              HandleErrorDBC(i_hdbc1);
          }

          rc = bcp_bind(i_hdbc1, (BYTE *) &i_id, 0, SQL_VARLEN_DATA, NULL, 0,
SQLINT4, 1);
          if (rc != SUCCEED)
                    HandleErrorDBC(i_hdbc1);

          rc = bcp_bind(i_hdbc1, (BYTE *) &i_im_id, 0, SQL_VARLEN_DATA, NULL, 0,
SQLINT4, 2);
          if (rc != SUCCEED)
                    HandleErrorDBC(i_hdbc1);

          rc = bcp_bind(i_hdbc1, (BYTE *) i_name, 0, I_NAME_LEN, NULL, 0, 0, 3);
          if (rc != SUCCEED)
                    HandleErrorDBC(i_hdbc1);
```


©2005 Hewlett-Packard Company. All rights reserved.

```
          rc = bcp_bind(i_hdbc1, (BYTE *) &i_price, 0, SQL_VARLEN_DATA, NULL, 0,
SQLFLT8, 4);
          if (rc != SUCCEED)
                    HandleErrorDBC(i_hdbc1);

          rc = bcp_bind(i_hdbc1, (BYTE *) i_data, 0, I_DATA_LEN, NULL, 0, 0, 5);
          if (rc != SUCCEED)
                    HandleErrorDBC(i_hdbc1);

          time_start = (TimeNow() / MILLI);

          item_rows_loaded = 0;

          for (i_id = 1; i_id <= max_items; i_id++)
          {
                    i_im_id = RandomNumber(1L, 10000L);

                    MakeAlphaString(14, 24, I_NAME_LEN, i_name);

                    i_price = ((float) RandomNumber(100L, 10000L))/100.0;

                    MakeOriginalAlphaString(26, 50, I_DATA_LEN, i_data, 10);

                    rc = bcp_sendrow(i_hdbc1);
                    if (rc != SUCCEED)
                              HandleErrorDBC(i_hdbc1);

                    item_rows_loaded++;
                    CheckForCommit(i_hdbc1, i_hstmt1, item_rows_loaded, "item",
&time_start);
          }

          rcint = bcp_done(i_hdbc1);
          if (rcint < 0)
                    HandleErrorDBC(i_hdbc1);

          printf("Finished loading item table.\n");

          SQLFreeStmt(i_hstmt1, SQL_DROP);
          SQLDisconnect(i_hdbc1);
          SQLFreeConnect(i_hdbc1);

          // if build index after load
          if ((aptr->build_index == 1) && (aptr->index_order == 0))
                    BuildIndex("idxitmcl");

}


//==============================================================================
//
// Function   : LoadWarehouse
//
// Loads WAREHOUSE table and loads Stock and District as Warehouses are created
//
//==============================================================================

void LoadWarehouse()
{
    short w_id;
    char  w_name[W_NAME_LEN+1];
    char  w_street_1[ADDRESS_LEN+1];
    char  w_street_2[ADDRESS_LEN+1];
    char  w_city[ADDRESS_LEN+1];
    char  w_state[STATE_LEN+1];
    char  w_zip[ZIP_LEN+1];
    double          w_tax;
    double          w_ytd;
          char      name[20];
          long      time_start;
          RETCODE   rc;
          DBINT     rcint;
          char      bcphint[128];


          // Seed with unique number
          seed(2);

          printf("Loading warehouse table...\n");

          // if build index before load...
          if ((aptr->build_index == 1) && (aptr->index_order == 1))
                    BuildIndex("idxwarcl");

          InitString(w_name, W_NAME_LEN+1);
          InitAddress(w_street_1, w_street_2, w_city, w_state, w_zip);

          sprintf(name, "%s..%s", aptr->database, "warehouse");

          rc = bcp_init(w_hdbc1, name, NULL, "logs\\whouse.err", DB_IN);
          if (rc != SUCCEED)
                    HandleErrorDBC(w_hdbc1);

          if ((aptr->build_index == 1) && (aptr->index_order == 1))
          {
                    sprintf(bcphint, "tablock, order (w_id), ROWS_PER_BATCH = %d",
aptr->num_warehouses);
                    rc = bcp_control(w_hdbc1, BCPHINTS, (void*) bcphint);
                    if (rc != SUCCEED)
                              HandleErrorDBC(w_hdbc1);
          }

          rc = bcp_bind(w_hdbc1, (BYTE *) &w_id, 0, SQL_VARLEN_DATA, NULL, 0,
SQLINT2, 1);
          if (rc != SUCCEED)
                    HandleErrorDBC(w_hdbc1);

          rc = bcp_bind(w_hdbc1, (BYTE *) w_name, 0, W_NAME_LEN, NULL, 0, 0, 2);
          if (rc != SUCCEED)
                    HandleErrorDBC(w_hdbc1);

          rc = bcp_bind(w_hdbc1, (BYTE *) w_street_1, 0, ADDRESS_LEN, NULL, 0, 0,
3);
          if (rc != SUCCEED)
                    HandleErrorDBC(w_hdbc1);

          rc = bcp_bind(w_hdbc1, (BYTE *) w_street_2, 0, ADDRESS_LEN, NULL, 0, 0,
4);
          if (rc != SUCCEED)
                    HandleErrorDBC(w_hdbc1);

          rc = bcp_bind(w_hdbc1, (BYTE *) w_city, 0, ADDRESS_LEN, NULL, 0, 0, 5);
          if (rc != SUCCEED)
                    HandleErrorDBC(w_hdbc1);
```


©2005 Hewlett-Packard Company. All rights reserved.

```
        rc = bcp_bind(w_hdbc1, (BYTE *) w_state, 0, STATE_LEN, NULL, 0, 0, 6);
        if (rc != SUCCEED)
                HandleErrorDBC(w_hdbc1);

        rc = bcp_bind(w_hdbc1, (BYTE *) w_zip, 0, ZIP_LEN, NULL, 0, 0, 7);
        if (rc != SUCCEED)
                HandleErrorDBC(w_hdbc1);

        rc = bcp_bind(w_hdbc1, (BYTE *) &w_tax, 0, SQL_VARLEN_DATA, NULL, 0,
SQLFLT8, 8);
        if (rc != SUCCEED)
                HandleErrorDBC(w_hdbc1);

        rc = bcp_bind(w_hdbc1, (BYTE *) &w_ytd, 0, SQL_VARLEN_DATA, NULL, 0,
SQLFLT8, 9);
        if (rc != SUCCEED)
                HandleErrorDBC(w_hdbc1);

        time_start = (TimeNow() / MILLI);

        warehouse_rows_loaded = 0;

        for (w_id = (short)aptr->starting_warehouse; w_id <= aptr->num_warehouses;
w_id++)
        {
                MakeAlphaString(6,10, W_NAME_LEN, w_name);

                MakeAddress(w_street_1, w_street_2, w_city, w_state, w_zip);

                w_tax = ((float) RandomNumber(0L,2000L))/10000.00;

                w_ytd = 300000.00;

                rc = bcp_sendrow(w_hdbc1);
                if (rc != SUCCEED)
                        HandleErrorDBC(w_hdbc1);

                warehouse_rows_loaded++;
                CheckForCommit(w_hdbc1, i_hstmt1, warehouse_rows_loaded,
"warehouse", &time_start);
        }

        rcint = bcp_done(w_hdbc1);
        if (rcint < 0)
                HandleErrorDBC(w_hdbc1);

        printf("Finished loading warehouse table.\n");

        // if build index after load...
        if ((aptr->build_index == 1) && (aptr->index_order == 0))
                BuildIndex("idxwarcl");

        stock_rows_loaded = 0;
        district_rows_loaded = 0;

        District();
        Stock();

}


//=====================================================================
//
// Function   : District
//
//=====================================================================

void District()
{
    short d_id;
    short d_w_id;
    char  d_name[D_NAME_LEN+1];
    char  d_street_1[ADDRESS_LEN+1];
    char  d_street_2[ADDRESS_LEN+1];
    char  d_city[ADDRESS_LEN+1];
    char  d_state[STATE_LEN+1];
    char  d_zip[ZIP_LEN+1];
    double          d_tax;
    double          d_ytd;
          char      name[20];
    long  d_next_o_id;
          long      time_start;
          int                 w_id;
          RETCODE   rc;
          DBINT     rcint;
          char      bcphint[128];

          // Seed with unique number
          seed(4);

          printf("Loading district table...\n");

          // build index before load
          if ((aptr->build_index == 1) && (aptr->index_order == 1))
                    BuildIndex("idxdiscl");

          InitString(d_name, D_NAME_LEN+1);
          InitAddress(d_street_1, d_street_2, d_city, d_state, d_zip);
          sprintf(name, "%s..%s", aptr->database, "district");

          rc = bcp_init(w_hdbc1, name, NULL, "logs\\district.err", DB_IN);
          if (rc != SUCCEED)
                    HandleErrorDBC(w_hdbc1);

          if ((aptr->build_index == 1) && (aptr->index_order == 1))
          {
                    sprintf(bcphint, "tablock, order (d_w_id, d_id), ROWS_PER_BATCH
= %u", (aptr->num_warehouses * 10));
                    rc = bcp_control(w_hdbc1, BCPHINTS, (void*) bcphint);
                    if (rc != SUCCEED)
                              HandleErrorDBC(w_hdbc1);
          }

          rc = bcp_bind(w_hdbc1, (BYTE *) &d_id, 0, SQL_VARLEN_DATA, NULL, 0,
SQLINT2, 1);
          if (rc != SUCCEED)
                    HandleErrorDBC(w_hdbc1);

          rc = bcp_bind(w_hdbc1, (BYTE *) &d_w_id, 0, SQL_VARLEN_DATA, NULL, 0,
SQLINT2, 2);
          if (rc != SUCCEED)
                    HandleErrorDBC(w_hdbc1);

          rc = bcp_bind(w_hdbc1, (BYTE *) d_name, 0, D_NAME_LEN, NULL, 0, 0, 3);
          if (rc != SUCCEED)
                    HandleErrorDBC(w_hdbc1);
```


©2005 Hewlett-Packard Company. All rights reserved.

```
        rc = bcp_bind(w_hdbc1, (BYTE *) d_street_1, 0, ADDRESS_LEN, NULL, 0, 0,
4);
        if (rc != SUCCEED)
                HandleErrorDBC(w_hdbc1);

        rc = bcp_bind(w_hdbc1, (BYTE *) d_street_2, 0, ADDRESS_LEN, NULL, 0, 0,
5);
        if (rc != SUCCEED)
                HandleErrorDBC(w_hdbc1);

        rc = bcp_bind(w_hdbc1, (BYTE *) d_city, 0, ADDRESS_LEN, NULL, 0, 0, 6);
        if (rc != SUCCEED)
                HandleErrorDBC(w_hdbc1);

        rc = bcp_bind(w_hdbc1, (BYTE *) d_state, 0, STATE_LEN, NULL, 0, 0, 7);
        if (rc != SUCCEED)
                HandleErrorDBC(w_hdbc1);

        rc = bcp_bind(w_hdbc1, (BYTE *) d_zip, 0, ZIP_LEN, NULL, 0, 0, 8);
        if (rc != SUCCEED)
                HandleErrorDBC(w_hdbc1);

        rc = bcp_bind(w_hdbc1, (BYTE *) &d_tax, 0, SQL_VARLEN_DATA, NULL, 0,
SQLFLT8, 9);
        if (rc != SUCCEED)
                HandleErrorDBC(w_hdbc1);

        rc = bcp_bind(w_hdbc1, (BYTE *) &d_ytd, 0, SQL_VARLEN_DATA, NULL, 0,
SQLFLT8, 10);
        if (rc != SUCCEED)
                HandleErrorDBC(w_hdbc1);

        rc = bcp_bind(w_hdbc1, (BYTE *) &d_next_o_id, 0, SQL_VARLEN_DATA, NULL, 0,
SQLINT4, 11);
        if (rc != SUCCEED)
                HandleErrorDBC(w_hdbc1);

        d_ytd  = 30000.0;

        d_next_o_id = orders_per_district+1;

        time_start = (TimeNow() / MILLI);

        for (w_id = aptr->starting_warehouse; w_id <= aptr->num_warehouses;
w_id++)
        {
                d_w_id = w_id;

                for (d_id = 1; d_id <= DISTRICT_PER_WAREHOUSE; d_id++)
                {
                        MakeAlphaString(6,10,D_NAME_LEN, d_name);

                        MakeAddress(d_street_1, d_street_2, d_city, d_state,
d_zip);

                        d_tax = ((float) RandomNumber(0L,2000L))/10000.00;

                        rc = bcp_sendrow(w_hdbc1);
                        if (rc != SUCCEED)
                                HandleErrorDBC(w_hdbc1);

                        district_rows_loaded++;

                                CheckForCommit(w_hdbc1, w_hstmt1,
district_rows_loaded, "district", &time_start);
                        }
    }

        rcint = bcp_done(w_hdbc1);
        if (rcint < 0)
                HandleErrorDBC(w_hdbc1);

        printf("Finished loading district table.\n");

        // if build index after load...
        if ((aptr->build_index == 1) && (aptr->index_order == 0))
                BuildIndex("idxdiscl");

    return;
}


//=====================================================================
//
// Function   : Stock
//
//=====================================================================

void Stock()
{
    long  s_i_id;
    short s_w_id;
    short s_quantity;
    char  s_dist_01[S_DIST_LEN+1];
    char  s_dist_02[S_DIST_LEN+1];
    char  s_dist_03[S_DIST_LEN+1];
    char  s_dist_04[S_DIST_LEN+1];
    char  s_dist_05[S_DIST_LEN+1];
    char  s_dist_06[S_DIST_LEN+1];
    char  s_dist_07[S_DIST_LEN+1];
    char  s_dist_08[S_DIST_LEN+1];
    char  s_dist_09[S_DIST_LEN+1];
    char  s_dist_10[S_DIST_LEN+1];
    long  s_ytd;
    short s_order_cnt;
    short s_remote_cnt;
    char  s_data[S_DATA_LEN+1];
    short len;
        char      name[20];
        long      time_start;
        RETCODE   rc;
        DBINT     rcint;
        char      bcphint[128];

        // Seed with unique number
        seed(3);

        // if build index before load...
        if ((aptr->build_index == 1) && (aptr->index_order == 1))
                BuildIndex("idxstkcl");

        sprintf(name, "%s..%s", aptr->database, "stock");

        rc = bcp_init(w_hdbc1, name, NULL, "logs\\stock.err", DB_IN);
        if (rc != SUCCEED)
                HandleErrorDBC(w_hdbc1);
```


©2005 Hewlett-Packard Company. All rights reserved.

```
        if ((aptr->build_index == 1) && (aptr->index_order == 1))
        {
                sprintf(bcphint, "tablock, order (s_i_id, s_w_id),
ROWS_PER_BATCH = %u", (aptr->num_warehouses * 100000));
                rc = bcp_control(w_hdbc1, BCPHINTS, (void*) bcphint);
                if (rc != SUCCEED)
                        HandleErrorDBC(w_hdbc1);
        }

        rc = bcp_bind(w_hdbc1, (BYTE *) &s_i_id, 0, SQL_VARLEN_DATA, NULL, 0,
SQLINT4, 1);
        if (rc != SUCCEED)
                HandleErrorDBC(w_hdbc1);

        bcp_bind(w_hdbc1, (BYTE *) &s_w_id, 0, SQL_VARLEN_DATA, NULL, 0, SQLINT2,
2);
        if (rc != SUCCEED)
                HandleErrorDBC(w_hdbc1);

        rc = bcp_bind(w_hdbc1, (BYTE *) &s_quantity, 0, SQL_VARLEN_DATA, NULL, 0,
SQLINT2, 3);
        if (rc != SUCCEED)
                HandleErrorDBC(w_hdbc1);

        rc = bcp_bind(w_hdbc1, (BYTE *) s_dist_01, 0, S_DIST_LEN, NULL, 0, 0, 4);
        if (rc != SUCCEED)
                HandleErrorDBC(w_hdbc1);

        rc = bcp_bind(w_hdbc1, (BYTE *) s_dist_02, 0, S_DIST_LEN, NULL, 0, 0, 5);
        if (rc != SUCCEED)
                HandleErrorDBC(w_hdbc1);

        rc = bcp_bind(w_hdbc1, (BYTE *) s_dist_03, 0, S_DIST_LEN, NULL, 0, 0, 6);
        if (rc != SUCCEED)
                HandleErrorDBC(w_hdbc1);

        rc = bcp_bind(w_hdbc1, (BYTE *) s_dist_04, 0, S_DIST_LEN, NULL, 0, 0, 7);
        if (rc != SUCCEED)
                HandleErrorDBC(w_hdbc1);

        rc = bcp_bind(w_hdbc1, (BYTE *) s_dist_05, 0, S_DIST_LEN, NULL, 0, 0, 8);
        if (rc != SUCCEED)
                HandleErrorDBC(w_hdbc1);

        rc = bcp_bind(w_hdbc1, (BYTE *) s_dist_06, 0, S_DIST_LEN, NULL, 0, 0, 9);
        if (rc != SUCCEED)
                HandleErrorDBC(w_hdbc1);

        rc = bcp_bind(w_hdbc1, (BYTE *) s_dist_07, 0, S_DIST_LEN, NULL, 0, 0, 10);
        if (rc != SUCCEED)
                HandleErrorDBC(w_hdbc1);

        rc = bcp_bind(w_hdbc1, (BYTE *) s_dist_08, 0, S_DIST_LEN, NULL, 0, 0, 11);
        if (rc != SUCCEED)
                HandleErrorDBC(w_hdbc1);

        rc = bcp_bind(w_hdbc1, (BYTE *) s_dist_09, 0, S_DIST_LEN, NULL, 0, 0, 12);
        if (rc != SUCCEED)
                HandleErrorDBC(w_hdbc1);

        rc = bcp_bind(w_hdbc1, (BYTE *) s_dist_10, 0, S_DIST_LEN, NULL, 0, 0, 13);
        if (rc != SUCCEED)
                HandleErrorDBC(w_hdbc1);

        rc = bcp_bind(w_hdbc1, (BYTE *) &s_ytd, 0, SQL_VARLEN_DATA, NULL, 0,
SQLINT4, 14);
        if (rc != SUCCEED)
                HandleErrorDBC(w_hdbc1);

        rc = bcp_bind(w_hdbc1, (BYTE *) &s_order_cnt, 0, SQL_VARLEN_DATA, NULL, 0,
SQLINT2, 15);
        if (rc != SUCCEED)
                HandleErrorDBC(w_hdbc1);

        rc = bcp_bind(w_hdbc1, (BYTE *) &s_remote_cnt, 0, SQL_VARLEN_DATA, NULL,
0, SQLINT2, 16);
        if (rc != SUCCEED)
                HandleErrorDBC(w_hdbc1);

        rc = bcp_bind(w_hdbc1, (BYTE *) s_data, 0, S_DATA_LEN, NULL, 0, 0, 17);
        if (rc != SUCCEED)
                HandleErrorDBC(w_hdbc1);

        s_ytd = s_order_cnt = s_remote_cnt = 0;

        time_start = (TimeNow() / MILLI);

        printf("...Loading stock table\n");

        for (s_i_id=1; s_i_id <= max_items; s_i_id++)
        {

                for (s_w_id = (short)aptr->starting_warehouse; s_w_id <= aptr-
>num_warehouses; s_w_id++)
                {

                        s_quantity = (short)RandomNumber(10L,100L);
                        len = MakeAlphaString(24,24,S_DIST_LEN, s_dist_01);
                        len = MakeAlphaString(24,24,S_DIST_LEN, s_dist_02);
                        len = MakeAlphaString(24,24,S_DIST_LEN, s_dist_03);
                        len = MakeAlphaString(24,24,S_DIST_LEN, s_dist_04);
                        len = MakeAlphaString(24,24,S_DIST_LEN, s_dist_05);
                        len = MakeAlphaString(24,24,S_DIST_LEN, s_dist_06);
                        len = MakeAlphaString(24,24,S_DIST_LEN, s_dist_07);
                        len = MakeAlphaString(24,24,S_DIST_LEN, s_dist_08);
                        len = MakeAlphaString(24,24,S_DIST_LEN, s_dist_09);
                        len = MakeAlphaString(24,24,S_DIST_LEN, s_dist_10);

                        len = MakeOriginalAlphaString(26,50, S_DATA_LEN,
s_data,10);

                        rc = bcp_sendrow(w_hdbc1);
                        if (rc != SUCCEED)
                                HandleErrorDBC(w_hdbc1);

                        stock_rows_loaded++;
                        CheckForCommit(w_hdbc1, w_hstmt1, stock_rows_loaded,
"stock", &time_start);

                }
        }

        rcint = bcp_done(w_hdbc1);
        if (rcint < 0)
                HandleErrorDBC(w_hdbc1);
```


©2005 Hewlett-Packard Company. All rights reserved.

```
          printf("Finished loading stock table.\n");

          SQLFreeStmt(w_hstmt1, SQL_DROP);
          SQLDisconnect(w_hdbc1);
          SQLFreeConnect(w_hdbc1);

          // if build index after load...
          if ((aptr->build_index == 1) && (aptr->index_order == 0))
                    BuildIndex("idxstkcl");

          return;
}


//=====================================================================
//
// Function   : LoadCustomer
//
//=====================================================================

void LoadCustomer()
{
          LOADER_TIME_STRUCT      customer_time_start;
          LOADER_TIME_STRUCT      history_time_start;
          short                         w_id;
    short                     d_id;
          DWORD                         dwThreadID[MAX_CUSTOMER_THREADS];
          HANDLE                        hThread[MAX_CUSTOMER_THREADS];
          char                          name[20];
          RETCODE                                         rc;
          DBINT                                           rcint;
          char                                            bcphint[128];
          char                                            cmd[256];
          // SQLRETURN                                    rc_1;
          // SQLSMALLINT                                  recnum, MsgLen;
          // SQLCHAR                                                 SqlState[6],
Msg[SQL_MAX_MESSAGE_LENGTH];
          // SQLINTEGER                                   NativeError;

          // Seed with unique number
          seed(5);

          printf("Loading customer and history tables...\n");

          // if build index before load...
          if ((aptr->build_index == 1) && (aptr->index_order == 1))
                    BuildIndex("idxcuscl");

          // Initialize bulk copy
          sprintf(name, "%s..%s", aptr->database, "customer");

          rc = bcp_init(c_hdbc1, name, NULL, "logs\\customer.err", DB_IN);
          if (rc != SUCCEED)
                    HandleErrorDBC(c_hdbc1);

          if ((aptr->build_index == 1) && (aptr->index_order == 1))
          {
                    sprintf(bcphint, "tablock, order (c_w_id, c_d_id, c_id),
ROWS_PER_BATCH = %u", (aptr->num_warehouses * 30000));
                    rc = bcp_control(c_hdbc1, BCPHINTS, (void*) bcphint);
                    if (rc != SUCCEED)
                              HandleErrorDBC(c_hdbc1);
          }

          sprintf(name, "%s..%s", aptr->database, "history");

          rc = bcp_init(c_hdbc2, name, NULL, "logs\\history.err", DB_IN);
          if (rc != SUCCEED)
                    HandleErrorDBC(c_hdbc2);

          sprintf(bcphint, "tablock");
          rc = bcp_control(c_hdbc2, BCPHINTS, (void*) bcphint);
          if (rc != SUCCEED)
                    HandleErrorDBC(c_hdbc2);

          customer_rows_loaded    = 0;
          history_rows_loaded     = 0;

          CustomerBufInit();

          customer_time_start.time_start = (TimeNow() / MILLI);
          history_time_start.time_start = (TimeNow() / MILLI);

          for (w_id = (short)aptr->starting_warehouse; w_id <= aptr->num_warehouses;
w_id++)
          {
                    for (d_id = 1; d_id <= DISTRICT_PER_WAREHOUSE; d_id++)
                    {

                              CustomerBufLoad(d_id, w_id);

                              // Start parallel loading threads here...

                              // Start customer table thread

                              printf("...Loading customer table for: d_id = %d, w_id
= %d\n", d_id, w_id);

                              hThread[0] = CreateThread(NULL,

            0,

            (LPTHREAD_START_ROUTINE) LoadCustomerTable,

            &customer_time_start,

            0,

            &dwThreadID[0]);

                              if (hThread[0] == NULL)
                              {
                                        printf("Error, failed in creating creating
thread = 0.\n");
                                        exit(-1);
                              }

                              // Start History table thread

                              printf("...Loading history table for: d_id = %d, w_id
= %d\n", d_id, w_id);

                              hThread[1] = CreateThread(NULL,

            0,
```


©2005 Hewlett-Packard Company. All rights reserved.

```
            (LPTHREAD_START_ROUTINE) LoadHistoryTable,

            &history_time_start,

            0,

            &dwThreadID[1]);

                              if (hThread[1] == NULL)
                              {
                                        printf("Error, failed in creating creating
thread = 1.\n");
                                        exit(-1);
                              }

                              WaitForSingleObject( hThread[0], INFINITE );
                              WaitForSingleObject( hThread[1], INFINITE );

                              if (CloseHandle(hThread[0]) == FALSE)
                              {
                                        printf("Error, failed in closing customer
thread handle with errno: %d\n", GetLastError());
                              }

                              if (CloseHandle(hThread[1]) == FALSE)
                              {
                                        printf("Error, failed in closing history
thread handle with errno: %d\n", GetLastError());
                              }


                    }

          }

          // flush the bulk connection
          rcint = bcp_done(c_hdbc1);
          if (rcint < 0)
                    HandleErrorDBC(c_hdbc1);

          rcint = bcp_done(c_hdbc2);
          if (rcint < 0)
                    HandleErrorDBC(c_hdbc2);

          printf("Finished loading customer table.\n");

          // if build index after load...
          if ((aptr->build_index == 1) && (aptr->index_order == 0))
                    BuildIndex("idxcuscl");

          // build non-clustered index
          if (aptr->build_index == 1)
                    BuildIndex("idxcusnc");

          // Output the NURAND used for the loader into C_FIRST for C_ID = 1,
          // C_W_ID = 1, and C_D_ID = 1
          sprintf(cmd, "isql -S%s -U%s -P%s -d%s -e -Q\"update customer set c_first
= 'C_LOAD = %d' where c_id = 1 and c_w_id = 1 and c_d_id = 1\" >
logs\\nurand_load.log",
                                        aptr->server,
                                        aptr->user,
                                        aptr->password,
                                        aptr->database,
                                        LOADER_NURAND_C);

          system(cmd);

          SQLFreeStmt(c_hstmt1, SQL_DROP);
          SQLDisconnect(c_hdbc1);
          SQLFreeConnect(c_hdbc1);

          SQLFreeStmt(c_hstmt2, SQL_DROP);
          SQLDisconnect(c_hdbc2);
          SQLFreeConnect(c_hdbc2);


    return;

}


//=====================================================================
//
// Function   : CustomerBufInit
//
//=====================================================================

void CustomerBufInit()
{
          int     i;

          for (i=0;i<customers_per_district;i++)
          {
                    customer_buf[i].c_id = 0;
                    customer_buf[i].c_d_id = 0;
                    customer_buf[i].c_w_id = 0;

                    strcpy(customer_buf[i].c_first,"");
                    strcpy(customer_buf[i].c_middle,"");
                    strcpy(customer_buf[i].c_last,"");
                    strcpy(customer_buf[i].c_street_1,"");
                    strcpy(customer_buf[i].c_street_2,"");
                    strcpy(customer_buf[i].c_city,"");
                    strcpy(customer_buf[i].c_state,"");
                    strcpy(customer_buf[i].c_zip,"");
                    strcpy(customer_buf[i].c_phone,"");
                    strcpy(customer_buf[i].c_credit,"");

                    customer_buf[i].c_credit_lim = 0;
                    customer_buf[i].c_discount = (float) 0;

                    //  fix to avoid ODBC float to numeric conversion problem.
                    //        customer_buf[i].c_balance = 0;
                    strcpy(customer_buf[i].c_balance,"");

                    customer_buf[i].c_ytd_payment = 0;
                    customer_buf[i].c_payment_cnt = 0;
                    customer_buf[i].c_delivery_cnt = 0;

                    strcpy(customer_buf[i].c_data,"");

                    customer_buf[i].h_amount = 0;

                    strcpy(customer_buf[i].h_data,"");
```


©2005 Hewlett-Packard Company. All rights reserved.

```
          }

}


//=====================================================================
//
// Function   : CustomerBufLoad
//
// Fills shared buffer for HISTORY and CUSTOMER
//=====================================================================

void CustomerBufLoad(int d_id, int w_id)
{
          long                                    i;
    CUSTOMER_SORT_STRUCT    c[CUSTOMERS_PER_DISTRICT];


          for (i=0;i<customers_per_district;i++)
          {
                    if (i < 1000)
                              LastName(i, c[i].c_last);
                    else
                              LastName(NURand(255,0,999,LOADER_NURAND_C),
c[i].c_last);

                    MakeAlphaString(8,16,FIRST_NAME_LEN, c[i].c_first);

                    c[i].c_id = i+1;

          }

          printf("...Loading customer buffer for: d_id = %d, w_id = %d\n",
                              d_id, w_id);

          for (i=0;i<customers_per_district;i++)
          {

                    customer_buf[i].c_d_id = d_id;
                    customer_buf[i].c_w_id = w_id;
                    customer_buf[i].h_amount = 10.0;

                    customer_buf[i].c_ytd_payment  = 10.0;

                    customer_buf[i].c_payment_cnt  = 1;
                    customer_buf[i].c_delivery_cnt = 0;

                    // Generate CUSTOMER and HISTORY data

                    customer_buf[i].c_id = c[i].c_id;

                    strcpy(customer_buf[i].c_first, c[i].c_first);
                    strcpy(customer_buf[i].c_last, c[i].c_last);

                    customer_buf[i].c_middle[0] = 'O';
                    customer_buf[i].c_middle[1] = 'E';

                    MakeAddress(customer_buf[i].c_street_1,
                                        customer_buf[i].c_street_2,
                                        customer_buf[i].c_city,
                                        customer_buf[i].c_state,
                                        customer_buf[i].c_zip);

                    MakeNumberString(16, 16, PHONE_LEN, customer_buf[i].c_phone);

                    if (RandomNumber(1L, 100L) > 10)
                              customer_buf[i].c_credit[0] = 'G';
                    else
                              customer_buf[i].c_credit[0] = 'B';
                    customer_buf[i].c_credit[1] = 'C';

                    customer_buf[i].c_credit_lim = 50000.0;
                    customer_buf[i].c_discount = ((float) RandomNumber(0L, 5000L)) /
10000.0;


                    //  fix to avoid ODBC float to numeric conversion problem.

                    //  customer_buf[i].c_balance = -10.0;
                    strcpy(customer_buf[i].c_balance,"-10.0");

                    MakeAlphaString(300, 500, C_DATA_LEN, customer_buf[i].c_data);


                    // Generate HISTORY data
                    MakeAlphaString(12, 24, H_DATA_LEN, customer_buf[i].h_data);

          }
}

//=====================================================================
//
// Function   : LoadCustomerTable
//
//=====================================================================

void LoadCustomerTable(LOADER_TIME_STRUCT *customer_time_start)
{
          int         i;
    long        c_id;
    short       c_d_id;
    short       c_w_id;
    char        c_first[FIRST_NAME_LEN+1];
    char        c_middle[MIDDLE_NAME_LEN+1];
    char        c_last[LAST_NAME_LEN+1];
    char        c_street_1[ADDRESS_LEN+1];
    char        c_street_2[ADDRESS_LEN+1];
    char        c_city[ADDRESS_LEN+1];
    char        c_state[STATE_LEN+1];
    char        c_zip[ZIP_LEN+1];
    char        c_phone[PHONE_LEN+1];
    char        c_credit[CREDIT_LEN+1];
    double      c_credit_lim;
    double      c_discount;

          //  fix to avoid ODBC float to numeric conversion problem.
          //  double                    c_balance;
          char                c_balance[6];

    double      c_ytd_payment;
    short       c_payment_cnt;
    short       c_delivery_cnt;
    char        c_data[C_DATA_LEN+1];
          char                c_since[C_SINCE_LEN+1];
          RETCODE             rc;
```


©2005 Hewlett-Packard Company. All rights reserved.

```
    rc = bcp_bind(c_hdbc1, (BYTE *) &c_id, 0, SQL_VARLEN_DATA, NULL, 0, SQLINT4, 1);
          if (rc != SUCCEED)
                    HandleErrorDBC(c_hdbc1);

    rc = bcp_bind(c_hdbc1, (BYTE *) &c_d_id, 0, SQL_VARLEN_DATA, NULL, 0, SQLINT2,
2);
          if (rc != SUCCEED)
                    HandleErrorDBC(c_hdbc1);

          rc = bcp_bind(c_hdbc1, (BYTE *) &c_w_id, 0, SQL_VARLEN_DATA, NULL, 0,
SQLINT2, 3);
          if (rc != SUCCEED)
                    HandleErrorDBC(c_hdbc1);

    rc = bcp_bind(c_hdbc1, (BYTE *) c_first, 0, FIRST_NAME_LEN, NULL, 0, 0, 4);
          if (rc != SUCCEED)
                    HandleErrorDBC(c_hdbc1);

    rc = bcp_bind(c_hdbc1, (BYTE *) c_middle, 0, MIDDLE_NAME_LEN,NULL, 0, 0, 5);
          if (rc != SUCCEED)
                    HandleErrorDBC(c_hdbc1);

    rc = bcp_bind(c_hdbc1, (BYTE *) c_last, 0, LAST_NAME_LEN, NULL, 0, 0, 6);
          if (rc != SUCCEED)
                    HandleErrorDBC(c_hdbc1);

    rc = bcp_bind(c_hdbc1, (BYTE *) c_street_1, 0, ADDRESS_LEN, NULL, 0, 0, 7);
          if (rc != SUCCEED)
                    HandleErrorDBC(c_hdbc1);

    rc = bcp_bind(c_hdbc1, (BYTE *) c_street_2, 0, ADDRESS_LEN, NULL,0,0, 8);
          if (rc != SUCCEED)
                    HandleErrorDBC(c_hdbc1);

    rc = bcp_bind(c_hdbc1, (BYTE *) c_city, 0, ADDRESS_LEN, NULL, 0, 0, 9);
          if (rc != SUCCEED)
                    HandleErrorDBC(c_hdbc1);

    rc = bcp_bind(c_hdbc1, (BYTE *) c_state, 0, STATE_LEN, NULL, 0, 0, 10);
          if (rc != SUCCEED)
                    HandleErrorDBC(c_hdbc1);

    rc = bcp_bind(c_hdbc1, (BYTE *) c_zip, 0, ZIP_LEN, NULL, 0, 0, 11);
          if (rc != SUCCEED)
                    HandleErrorDBC(c_hdbc1);

    rc = bcp_bind(c_hdbc1, (BYTE *) c_phone, 0, PHONE_LEN, NULL, 0, 0, 12);
          if (rc != SUCCEED)
                    HandleErrorDBC(c_hdbc1);

          rc = bcp_bind(c_hdbc1, (BYTE *) &c_since, 0, C_SINCE_LEN, NULL, 0,
SQLCHARACTER, 13);
          if (rc != SUCCEED)
                    HandleErrorDBC(c_hdbc1);

    rc = bcp_bind(c_hdbc1, (BYTE *) c_credit, 0, CREDIT_LEN, NULL, 0, 0, 14);
          if (rc != SUCCEED)
                    HandleErrorDBC(c_hdbc1);

    rc = bcp_bind(c_hdbc1, (BYTE *) &c_credit_lim, 0, SQL_VARLEN_DATA, NULL, 0,
SQLFLT8, 15);
          if (rc != SUCCEED)
                    HandleErrorDBC(c_hdbc1);

    rc = bcp_bind(c_hdbc1, (BYTE *) &c_discount, 0, SQL_VARLEN_DATA, NULL, 0,
SQLFLT8, 16);
          if (rc != SUCCEED)
                    HandleErrorDBC(c_hdbc1);


          //  fix to avoid ODBC float to numeric conversion problem.

    //  rc = bcp_bind(c_hdbc1, (BYTE *) &c_balance, 0, SQL_VARLEN_DATA, NULL, 0,
SQLFLT8, 17);
          //  if (rc != SUCCEED)
          //        HandleErrorDBC(c_hdbc1);
    rc = bcp_bind(c_hdbc1, (BYTE *) c_balance, 0, 5, NULL, 0, SQLCHARACTER, 17);
          if (rc != SUCCEED)
                    HandleErrorDBC(c_hdbc1);


    rc = bcp_bind(c_hdbc1, (BYTE *) &c_ytd_payment, 0, SQL_VARLEN_DATA, NULL, 0,
SQLFLT8, 18);
          if (rc != SUCCEED)
                    HandleErrorDBC(c_hdbc1);

    rc = bcp_bind(c_hdbc1, (BYTE *) &c_payment_cnt, 0, SQL_VARLEN_DATA, NULL, 0,
SQLINT2, 19);
          if (rc != SUCCEED)
                    HandleErrorDBC(c_hdbc1);

    rc = bcp_bind(c_hdbc1, (BYTE *) &c_delivery_cnt,0, SQL_VARLEN_DATA, NULL, 0,
SQLINT2, 20);
          if (rc != SUCCEED)
                    HandleErrorDBC(c_hdbc1);

    rc = bcp_bind(c_hdbc1, (BYTE *) c_data, 0, 500, NULL, 0, 0, 21);
          if (rc != SUCCEED)
                    HandleErrorDBC(c_hdbc1);

    for (i = 0; i < customers_per_district; i++)
    {
                    c_id = customer_buf[i].c_id;
                    c_d_id = customer_buf[i].c_d_id;
                    c_w_id = customer_buf[i].c_w_id;

                    strcpy(c_first, customer_buf[i].c_first);
                    strcpy(c_middle, customer_buf[i].c_middle);
                    strcpy(c_last, customer_buf[i].c_last);
                    strcpy(c_street_1, customer_buf[i].c_street_1);
                    strcpy(c_street_2, customer_buf[i].c_street_2);
                    strcpy(c_city, customer_buf[i].c_city);
                    strcpy(c_state, customer_buf[i].c_state);
                    strcpy(c_zip, customer_buf[i].c_zip);
                    strcpy(c_phone, customer_buf[i].c_phone);
                    strcpy(c_credit, customer_buf[i].c_credit);

                    FormatDate(&c_since);


                    c_credit_lim = customer_buf[i].c_credit_lim;
                    c_discount = customer_buf[i].c_discount;

                    //  fix to avoid ODBC float to numeric conversion problem.

                    //  c_balance = customer_buf[i].c_balance;
```


©2005 Hewlett-Packard Company. All rights reserved.

```
                    strcpy(c_balance, customer_buf[i].c_balance);

                    c_ytd_payment = customer_buf[i].c_ytd_payment;
                    c_payment_cnt = customer_buf[i].c_payment_cnt;
                    c_delivery_cnt = customer_buf[i].c_delivery_cnt;

                    strcpy(c_data, customer_buf[i].c_data);

                    // Send data to server
                    rc = bcp_sendrow(c_hdbc1);
                    if (rc != SUCCEED)
                              HandleErrorDBC(c_hdbc1);

                    customer_rows_loaded++;
                    CheckForCommit(c_hdbc1, c_hstmt1, customer_rows_loaded,
"customer", &customer_time_start->time_start);
    }

}


//=====================================================================
//
// Function   : LoadHistoryTable
//
//=====================================================================

void LoadHistoryTable(LOADER_TIME_STRUCT *history_time_start)
{
          int         i;
    long        c_id;
    short       c_d_id;
    short       c_w_id;
          double    h_amount;
    char        h_data[H_DATA_LEN+1];
          char                h_date[H_DATE_LEN+1];
          RETCODE             rc;

    rc = bcp_bind(c_hdbc2, (BYTE *) &c_id, 0, SQL_VARLEN_DATA, NULL, 0, SQLINT4, 1);
          if (rc != SUCCEED)
                    HandleErrorDBC(c_hdbc2);

    rc = bcp_bind(c_hdbc2, (BYTE *) &c_d_id, 0, SQL_VARLEN_DATA, NULL, 0, SQLINT2,
2);
          if (rc != SUCCEED)
                    HandleErrorDBC(c_hdbc2);

    rc = bcp_bind(c_hdbc2, (BYTE *) &c_w_id, 0, SQL_VARLEN_DATA, NULL, 0, SQLINT2,
3);
          if (rc != SUCCEED)
                    HandleErrorDBC(c_hdbc2);

    rc = bcp_bind(c_hdbc2, (BYTE *) &c_d_id, 0, SQL_VARLEN_DATA, NULL, 0, SQLINT2,
4);
          if (rc != SUCCEED)
                    HandleErrorDBC(c_hdbc2);

    rc = bcp_bind(c_hdbc2, (BYTE *) &c_w_id, 0, SQL_VARLEN_DATA, NULL, 0, SQLINT2,
5);
          if (rc != SUCCEED)
                    HandleErrorDBC(c_hdbc2);
```

```
          rc = bcp_bind(c_hdbc2, (BYTE *) &h_date, 0, H_DATE_LEN, NULL, 0,
SQLCHARACTER, 6);
          if (rc != SUCCEED)
                    HandleErrorDBC(c_hdbc2);

    rc = bcp_bind(c_hdbc2, (BYTE *) &h_amount, 0, SQL_VARLEN_DATA, NULL, 0, SQLFLT8,
7);
          if (rc != SUCCEED)
                    HandleErrorDBC(c_hdbc2);

    rc = bcp_bind(c_hdbc2, (BYTE *) h_data, 0, H_DATA_LEN, NULL, 0, 0, 8);
          if (rc != SUCCEED)
                    HandleErrorDBC(c_hdbc2);

    for (i = 0; i < customers_per_district; i++)
    {
                    c_id = customer_buf[i].c_id;
                    c_d_id = customer_buf[i].c_d_id;
                    c_w_id = customer_buf[i].c_w_id;
                    h_amount = customer_buf[i].h_amount;
                    strcpy(h_data, customer_buf[i].h_data);

                    FormatDate(&h_date);

                    // send to server
                    rc = bcp_sendrow(c_hdbc2);
                    if (rc != SUCCEED)
                              HandleErrorDBC(c_hdbc2);

                    history_rows_loaded++;
                    CheckForCommit(c_hdbc2, c_hstmt2, history_rows_loaded,
"history", &history_time_start->time_start);
    }

}


//=============================================================-===============
//
// Function   : LoadOrders
//
//=========================================================================

void LoadOrders()
{
          LOADER_TIME_STRUCT      orders_time_start;
          LOADER_TIME_STRUCT      new_order_time_start;
          LOADER_TIME_STRUCT      order_line_time_start;
          short                         w_id;
    short                         d_id;
          DWORD                         dwThreadID[MAX_ORDER_THREADS];
          HANDLE                        hThread[MAX_ORDER_THREADS];
          char                          name[20];
          RETCODE                                         rc;
          char                                            bcphint[128];

          // seed with unique number
          seed(6);

          printf("Loading orders...\n");

          // if build index before load...
          if ((aptr->build_index == 1) && (aptr->index_order == 1))
```


©2005 Hewlett-Packard Company. All rights reserved.

```
        {
                        BuildIndex("idxordcl");
                        BuildIndex("idxnodcl");
                        BuildIndex("idxodlcl");
        }

        // initialize bulk copy
        sprintf(name, "%s..%s", aptr->database, "orders");

        rc = bcp_init(o_hdbc1, name, NULL, "logs\\orders.err", DB_IN);
        if (rc != SUCCEED)
                HandleErrorDBC(o_hdbc1);

        if ((aptr->build_index == 1) && (aptr->index_order == 1))
        {
                sprintf(bcphint, "tablock, order (o_w_id, o_d_id, o_id),
ROWS_PER_BATCH = %u", (aptr->num_warehouses * 30000));
                rc = bcp_control(o_hdbc1, BCPHINTS, (void*) bcphint);
                if (rc != SUCCEED)
                        HandleErrorDBC(o_hdbc1);
        }

        sprintf(name, "%s..%s", aptr->database, "new_order");

        rc = bcp_init(o_hdbc2, name, NULL, "logs\\neword.err", DB_IN);
        if (rc != SUCCEED)
                HandleErrorDBC(o_hdbc2);

        if ((aptr->build_index == 1) && (aptr->index_order == 1))
        {
                sprintf(bcphint, "tablock, order (no_w_id, no_d_id, no_o_id),
ROWS_PER_BATCH = %u", (aptr->num_warehouses * 9000));
                rc = bcp_control(o_hdbc2, BCPHINTS, (void*) bcphint);
                if (rc != SUCCEED)
                        HandleErrorDBC(o_hdbc2);
        }

        sprintf(name, "%s..%s", aptr->database, "order_line");

        rc = bcp_init(o_hdbc3, name, NULL, "logs\\ordline.err", DB_IN);
        if (rc != SUCCEED)
                HandleErrorDBC(o_hdbc3);

    if ((aptr->build_index == 1) && (aptr->index_order == 1))
        {
                sprintf(bcphint, "tablock, order (ol_w_id, ol_d_id, ol_o_id,
ol_number), ROWS_PER_BATCH = %u", (aptr->num_warehouses * 300000));
                rc = bcp_control(o_hdbc3, BCPHINTS, (void*) bcphint);
                if (rc != SUCCEED)
                        HandleErrorDBC(o_hdbc3);
        }

        orders_rows_loaded      = 0;
        new_order_rows_loaded   = 0;
        order_line_rows_loaded  = 0;

        OrdersBufInit();

        orders_time_start.time_start = (TimeNow() / MILLI);
        new_order_time_start.time_start = (TimeNow() / MILLI);
        order_line_time_start.time_start = (TimeNow() / MILLI);

        for (w_id = (short)aptr->starting_warehouse; w_id <= aptr->num_warehouses;
w_id++)
        {
                for (d_id = 1; d_id <= DISTRICT_PER_WAREHOUSE; d_id++)
                {

                        OrdersBufLoad(d_id, w_id);

                        // start parallel loading threads here...

                        // start Orders table thread

                        printf("...Loading Order Table for: d_id = %d, w_id =
%d\n", d_id, w_id);

                        hThread[0] = CreateThread(NULL,

                0,

                (LPTHREAD_START_ROUTINE) LoadOrdersTable,

                &orders_time_start,

                0,

                &dwThreadID[0]);

                        if (hThread[0] == NULL)
                        {
                                printf("Error, failed in creating creating
thread = 0.\n");
                                exit(-1);
                        }

                        // start NewOrder table thread

                        printf("...Loading New-Order Table for: d_id = %d,
w_id = %d\n", d_id, w_id);

                        hThread[1] = CreateThread(NULL,

                0,

                (LPTHREAD_START_ROUTINE) LoadNewOrderTable,

                &new_order_time_start,

                0,

                &dwThreadID[1]);

                        if (hThread[1] == NULL)
                        {
                                printf("Error, failed in creating creating
thread = 1.\n");
                                exit(-1);
                        }

                        // start Order-Line table thread

                        printf("...Loading Order-Line Table for: d_id = %d,
w_id = %d\n", d_id, w_id);
```


©2005 Hewlett-Packard Company. All rights reserved.

```
                                hThread[2] = CreateThread(NULL,
            0,
            (LPTHREAD_START_ROUTINE) LoadOrderLineTable,
            &order_line_time_start,
            0,
            &dwThreadID[2]);
                                if (hThread[2] == NULL)
                                {
                                          printf("Error, failed in creating creating
thread = 2.\n");
                                          exit(-1);
                                }
                                WaitForSingleObject( hThread[0], INFINITE );
                                WaitForSingleObject( hThread[1], INFINITE );
                                WaitForSingleObject( hThread[2], INFINITE );

                                if (CloseHandle(hThread[0]) == FALSE)
                                {
                                          printf("Error, failed in closing Orders
thread handle with errno: %d\n", GetLastError());
                                }
                                if (CloseHandle(hThread[1]) == FALSE)
                                {
                                          printf("Error, failed in closing NewOrder
thread handle with errno: %d\n", GetLastError());
                                }
                                if (CloseHandle(hThread[2]) == FALSE)
                                {
                                          printf("Error, failed in closing OrderLine
thread handle with errno: %d\n", GetLastError());
                                }
                    }
          }
          printf("Finished loading orders.\n");


    return;
}


//=====================================================================
//
// Function   : OrdersBufInit
//
// Clears shared buffer for ORDERS, NEWORDER, and ORDERLINE
//
//=====================================================================

void OrdersBufInit()
{
          int     i;
          int                 j;
          for (i=0;i<orders_per_district;i++)
          {
                    orders_buf[i].o_id = 0;
                    orders_buf[i].o_d_id = 0;
                    orders_buf[i].o_w_id = 0;
                    orders_buf[i].o_c_id = 0;
                    orders_buf[i].o_carrier_id = 0;
                    orders_buf[i].o_ol_cnt = 0;
                    orders_buf[i].o_all_local = 0;

                    for (j=0;j<=14;j++)
                    {
                              orders_buf[i].o_ol[j].ol = 0;
                              orders_buf[i].o_ol[j].ol_i_id = 0;
                              orders_buf[i].o_ol[j].ol_supply_w_id = 0;
                              orders_buf[i].o_ol[j].ol_quantity = 0;
                              orders_buf[i].o_ol[j].ol_amount = 0;
                              strcpy(orders_buf[i].o_ol[j].ol_dist_info,"");
                    }
          }


}


//=====================================================================
//
// Function   : OrdersBufLoad
//
// Fills shared buffer for ORDERS, NEWORDER, and ORDERLINE
//
//=====================================================================

void OrdersBufLoad(int d_id, int w_id)
{

          int     cust[ORDERS_PER_DISTRICT+1];
          long    o_id;
          short   ol;

          printf("...Loading Order Buffer for: d_id = %d, w_id = %d\n",
                              d_id, w_id);

          GetPermutation(cust, orders_per_district);

          for (o_id=0;o_id<orders_per_district;o_id++)
          {

                    // Generate ORDER and NEW-ORDER data

                    orders_buf[o_id].o_d_id = d_id;
                    orders_buf[o_id].o_w_id = w_id;
                    orders_buf[o_id].o_id = o_id+1;
                    orders_buf[o_id].o_c_id = cust[o_id+1];
                    orders_buf[o_id].o_ol_cnt = (short)RandomNumber(5L, 15L);

                    if (o_id < first_new_order)
                    {
                              orders_buf[o_id].o_carrier_id =
(short)RandomNumber(1L, 10L);
                              orders_buf[o_id].o_all_local  = 1;
                    }
```


©2005 Hewlett-Packard Company. All rights reserved.

```
                    else
                    {
                              orders_buf[o_id].o_carrier_id = 0;
                              orders_buf[o_id].o_all_local  = 1;
                    }

                    for (ol=0; ol<orders_buf[o_id].o_ol_cnt; ol++)
                    {

                              orders_buf[o_id].o_ol[ol].ol = ol+1;
                              orders_buf[o_id].o_ol[ol].ol_i_id = RandomNumber(1L,
max_items);
                              orders_buf[o_id].o_ol[ol].ol_supply_w_id = w_id;
                              orders_buf[o_id].o_ol[ol].ol_quantity = 5;
                              MakeAlphaString(24, 24, OL_DIST_INFO_LEN,
&orders_buf[o_id].o_ol[ol].ol_dist_info);

                              // Generate ORDER-LINE data
                              if (o_id < first_new_order)
                              {
                                        orders_buf[o_id].o_ol[ol].ol_amount = 0;
                                        // Added to insure ol_delivery_d set
properly during load


          FormatDate(&orders_buf[o_id].o_ol[ol].ol_delivery_d);

                              }
                              else
                              {
                                        orders_buf[o_id].o_ol[ol].ol_amount =
RandomNumber(1,999999)/100.0;
                                        // Added to insure ol_delivery_d set
properly during load

                                        // odbc datetime format

          strcpy(orders_buf[o_id].o_ol[ol].ol_delivery_d,"1899-12-31 00:00:00.000");

                              }
                    }
          }
}


//=====================================================================
//
// Function   : LoadOrdersTable
//
//=====================================================================

void LoadOrdersTable(LOADER_TIME_STRUCT *orders_time_start)
{
          int         i;
    long        o_id;
          short     o_d_id;
          short     o_w_id;
    long        o_c_id;
    short       o_carrier_id;
    short       o_ol_cnt;
    short       o_all_local;
          char                o_entry_d[O_ENTRY_D_LEN+1];
          RETCODE             rc;
          DBINT               rcint;

          // bind ORDER data
    rc = bcp_bind(o_hdbc1, (BYTE *) &o_id, 0, SQL_VARLEN_DATA, NULL, 0, SQLINT4, 1);
          if (rc != SUCCEED)
                    HandleErrorDBC(o_hdbc1);

    rc = bcp_bind(o_hdbc1, (BYTE *) &o_d_id, 0, SQL_VARLEN_DATA, NULL, 0, SQLINT2,
2);
          if (rc != SUCCEED)
                    HandleErrorDBC(o_hdbc1);

    rc = bcp_bind(o_hdbc1, (BYTE *) &o_w_id, 0, SQL_VARLEN_DATA, NULL, 0, SQLINT2,
3);
          if (rc != SUCCEED)
                    HandleErrorDBC(o_hdbc1);

    rc = bcp_bind(o_hdbc1, (BYTE *) &o_c_id, 0, SQL_VARLEN_DATA, NULL, 0, SQLINT4,
4);
          if (rc != SUCCEED)
                    HandleErrorDBC(o_hdbc1);

          rc = bcp_bind(o_hdbc1, (BYTE *) &o_entry_d, 0, O_ENTRY_D_LEN, NULL, 0,
SQLCHARACTER, 5);
          if (rc != SUCCEED)
                    HandleErrorDBC(o_hdbc1);

    rc = bcp_bind(o_hdbc1, (BYTE *) &o_carrier_id, 0, SQL_VARLEN_DATA, NULL, 0,
SQLINT2, 6);
          if (rc != SUCCEED)
                    HandleErrorDBC(o_hdbc1);

    rc = bcp_bind(o_hdbc1, (BYTE *) &o_ol_cnt, 0, SQL_VARLEN_DATA, NULL, 0, SQLINT2,
7);
          if (rc != SUCCEED)
                    HandleErrorDBC(o_hdbc1);

    rc = bcp_bind(o_hdbc1, (BYTE *) &o_all_local, 0, SQL_VARLEN_DATA, NULL, 0,
SQLINT2, 8);
          if (rc != SUCCEED)
                    HandleErrorDBC(o_hdbc1);

    for (i = 0; i < orders_per_district; i++)
    {
                    o_id         = orders_buf[i].o_id;
                    o_d_id       = orders_buf[i].o_d_id;
                    o_w_id       = orders_buf[i].o_w_id;
                    o_c_id       = orders_buf[i].o_c_id;
                    o_carrier_id = orders_buf[i].o_carrier_id;
                    o_ol_cnt     = orders_buf[i].o_ol_cnt;
                    o_all_local  = orders_buf[i].o_all_local;

                    FormatDate(&o_entry_d);

                    // send data to server
                    rc = bcp_sendrow(o_hdbc1);
                    if (rc != SUCCEED)
                              HandleErrorDBC(o_hdbc1);

                    orders_rows_loaded++;
                    CheckForCommit(o_hdbc1, o_hstmt1, orders_rows_loaded, "orders",
&orders_time_start->time_start);
    }
```


©2005 Hewlett-Packard Company. All rights reserved.

```
          // rcint = bcp_batch(o_hdbc1);
          // if (rcint < 0)
          //        HandleErrorDBC(o_hdbc1);

          if ((o_w_id == aptr->num_warehouses) && (o_d_id == 10))
          {
                    rcint = bcp_done(o_hdbc1);
                    if (rcint < 0)
                              HandleErrorDBC(o_hdbc1);

                    SQLFreeStmt(o_hstmt1, SQL_DROP);
                    SQLDisconnect(o_hdbc1);
                    SQLFreeConnect(o_hdbc1);

                    // if build index after load...
                    if ((aptr->build_index == 1) && (aptr->index_order == 0))
                              BuildIndex("idxordcl");

                    // build non-clustered index
                    if (aptr->build_index == 1)
                              BuildIndex("idxordnc");
          }

}


//=====================================================================
//
// Function   : LoadNewOrderTable
//
//=====================================================================

void LoadNewOrderTable(LOADER_TIME_STRUCT *new_order_time_start)
{
    int         i;
    long        o_id;
    short       o_d_id;
    short       o_w_id;
          RETCODE             rc;
          DBINT               rcint;

          // Bind NEW-ORDER data

    rc = bcp_bind(o_hdbc2, (BYTE *) &o_id, 0, SQL_VARLEN_DATA, NULL, 0, SQLINT4, 1);
          if (rc != SUCCEED)
                    HandleErrorDBC(o_hdbc2);

    rc = bcp_bind(o_hdbc2, (BYTE *) &o_d_id, 0, SQL_VARLEN_DATA, NULL, 0, SQLINT2,
2);
          if (rc != SUCCEED)
                    HandleErrorDBC(o_hdbc2);

    rc = bcp_bind(o_hdbc2, (BYTE *) &o_w_id, 0, SQL_VARLEN_DATA, NULL, 0, SQLINT2,
3);
          if (rc != SUCCEED)
                    HandleErrorDBC(o_hdbc2);

          for (i = first_new_order; i < last_new_order; i++)
          {
                    o_id    = orders_buf[i].o_id;
                    o_d_id  = orders_buf[i].o_d_id;
                    o_w_id  = orders_buf[i].o_w_id;
```

```
                    rc = bcp_sendrow(o_hdbc2);
                    if (rc != SUCCEED)
                              HandleErrorDBC(o_hdbc2);

                    new_order_rows_loaded++;
                    CheckForCommit(o_hdbc2, o_hstmt2, new_order_rows_loaded,
"new_order", &new_order_time_start->time_start);
          }

          // rcint = bcp_batch(o_hdbc2);
          // if (rcint < 0)
          //        HandleErrorDBC(o_hdbc2);

          if ((o_w_id == aptr->num_warehouses) && (o_d_id == 10))
          {
                    rcint = bcp_done(o_hdbc2);
                    if (rcint < 0)
                              HandleErrorDBC(o_hdbc2);

                    SQLFreeStmt(o_hstmt2, SQL_DROP);
                    SQLDisconnect(o_hdbc2);
                    SQLFreeConnect(o_hdbc2);

                    // if build index after load...
                    if ((aptr->build_index == 1) && (aptr->index_order == 0))
                              BuildIndex("idxnodcl");

          }

}


//=====================================================================
//
// Function   : LoadOrderLineTable
//
//=====================================================================

void LoadOrderLineTable(LOADER_TIME_STRUCT *order_line_time_start)
{
          int         i,j;
    long        o_id;
          short     o_d_id;
          short     o_w_id;
    long        ol;
          long      ol_i_id;
    short       ol_supply_w_id;
    short       ol_quantity;
    double      ol_amount;
    char        ol_dist_info[DIST_INFO_LEN+1];
          char                ol_delivery_d[OL_DELIVERY_D_LEN+1];
          RETCODE             rc;
          DBINT               rcint;

          // bind ORDER-LINE data
    rc = bcp_bind(o_hdbc3, (BYTE *) &o_id, 0, SQL_VARLEN_DATA, NULL, 0, SQLINT4, 1);
          if (rc != SUCCEED)
                    HandleErrorDBC(o_hdbc3);

    rc = bcp_bind(o_hdbc3, (BYTE *) &o_d_id, 0, SQL_VARLEN_DATA, NULL, 0, SQLINT2,
2);
          if (rc != SUCCEED)
```


©2005 Hewlett-Packard Company. All rights reserved.

```
                    HandleErrorDBC(o_hdbc3);

    rc = bcp_bind(o_hdbc3, (BYTE *) &o_w_id, 0, SQL_VARLEN_DATA, NULL, 0, SQLINT2,
3);
          if (rc != SUCCEED)
                    HandleErrorDBC(o_hdbc3);

    rc = bcp_bind(o_hdbc3, (BYTE *) &ol, 0, SQL_VARLEN_DATA, NULL, 0, SQLINT4, 4);
          if (rc != SUCCEED)
                    HandleErrorDBC(o_hdbc3);

    rc = bcp_bind(o_hdbc3, (BYTE *) &ol_i_id, 0, SQL_VARLEN_DATA, NULL, 0, SQLINT4,
5);
          if (rc != SUCCEED)
                    HandleErrorDBC(o_hdbc3);

    rc = bcp_bind(o_hdbc3, (BYTE *) &ol_supply_w_id, 0, SQL_VARLEN_DATA, NULL, 0,
SQLINT2, 6);
          if (rc != SUCCEED)
                    HandleErrorDBC(o_hdbc3);

          rc = bcp_bind(o_hdbc3, (BYTE *) &ol_delivery_d, 0, OL_DELIVERY_D_LEN,
NULL, 0, SQLCHARACTER, 7);
          if (rc != SUCCEED)
                    HandleErrorDBC(o_hdbc3);

    rc = bcp_bind(o_hdbc3, (BYTE *) &ol_quantity, 0, SQL_VARLEN_DATA, NULL, 0,
SQLINT2, 8);
          if (rc != SUCCEED)
                    HandleErrorDBC(o_hdbc3);

    rc = bcp_bind(o_hdbc3, (BYTE *) &ol_amount, 0, SQL_VARLEN_DATA, NULL, 0,
SQLFLT8, 9);
          if (rc != SUCCEED)
                    HandleErrorDBC(o_hdbc3);

    rc = bcp_bind(o_hdbc3, (BYTE *) ol_dist_info, 0, DIST_INFO_LEN, NULL, 0, 0, 10);
          if (rc != SUCCEED)
                    HandleErrorDBC(o_hdbc3);

          for (i = 0; i < orders_per_district; i++)
    {
                    o_id    = orders_buf[i].o_id;
                    o_d_id  = orders_buf[i].o_d_id;
                    o_w_id  = orders_buf[i].o_w_id;

                    for (j=0; j < orders_buf[i].o_ol_cnt; j++)
                    {
                              ol             = orders_buf[i].o_ol[j].ol;
                              ol_i_id        = orders_buf[i].o_ol[j].ol_i_id;
                              ol_supply_w_id = orders_buf[i].o_ol[j].ol_supply_w_id;
                              ol_quantity    = orders_buf[i].o_ol[j].ol_quantity;
                              ol_amount      = orders_buf[i].o_ol[j].ol_amount;


          strcpy(ol_delivery_d,orders_buf[i].o_ol[j].ol_delivery_d);


          strcpy(ol_dist_info,orders_buf[i].o_ol[j].ol_dist_info);

                              rc = bcp_sendrow(o_hdbc3);
                              if (rc != SUCCEED)
                                        HandleErrorDBC(o_hdbc3);
                              order_line_rows_loaded++;
                              CheckForCommit(o_hdbc3, o_hstmt3,
order_line_rows_loaded, "order_line", &order_line_time_start->time_start);
                    }

          }

          // rcint = bcp_batch(o_hdbc3);
          // if (rcint < 0)
          //        HandleErrorDBC(o_hdbc3);

          if ((o_w_id == aptr->num_warehouses) && (o_d_id == 10))
          {
                    rcint = bcp_done(o_hdbc3);
                    if (rcint < 0)
                              HandleErrorDBC(o_hdbc3);

                    SQLFreeStmt(o_hstmt3, SQL_DROP);
                    SQLDisconnect(o_hdbc3);
                    SQLFreeConnect(o_hdbc3);

                    // if build index after load...
                    if ((aptr->build_index == 1) && (aptr->index_order == 0))
                              BuildIndex("idxodlcl");

          }

}


//=====================================================================
//
// Function   : GetPermutation
//
//=====================================================================

void GetPermutation(int perm[], int n)
{
          int i, r, t;

          for (i=1;i<=n;i++)
                    perm[i] = i;

          for (i=1;i<=n;i++)
          {
                    r = RandomNumber(i,n);
                    t = perm[i];
                    perm[i] = perm[r];
                    perm[r] = t;
          }

}


//=====================================================================
//
// Function   : CheckForCommit
//
//=====================================================================

void CheckForCommit(HDBC hdbc,
                                                  HSTMT hstmt,
```


©2005 Hewlett-Packard Company. All rights reserved.

```
                                        int rows_loaded,
                                                  char *table_name,
                                        long *time_start)
{

    long  time_end, time_diff;
          // DBINT  rcint;

    if ( !(rows_loaded % aptr->batch) )
    {

                    // rcint = bcp_batch(hdbc);
                    // if (rcint < 0)
                    //        HandleErrorDBC(hdbc);

                    time_end = (TimeNow() / MILLI);
                    time_diff = time_end - *time_start;

                    printf("-> Loaded %ld rows into %s in %ld sec - Total = %d (%.2f
rps)\n",
                              aptr->batch,
                              table_name,
                                        time_diff,
                              rows_loaded,
                                        (float) aptr->batch / (time_diff ? time_diff
: 1L));

                    *time_start = time_end;
    }

    return;
}


//=====================================================================
//
// Function   : OpenConnections
//
//=====================================================================

void OpenConnections()
{

          RETCODE         rc;

          char                          szDriverString[300];
          char                          szDriverStringOut[1024];
          SQLSMALLINT                   cbDriverStringOut;


          SQLAllocHandle(SQL_HANDLE_ENV, SQL_NULL_HANDLE, &henv );

          SQLSetEnvAttr(henv, SQL_ATTR_ODBC_VERSION, (void*)SQL_OV_ODBC3, 0 );

          SQLAllocHandle(SQL_HANDLE_DBC, henv , &i_hdbc1);
          SQLAllocHandle(SQL_HANDLE_DBC, henv , &w_hdbc1);
          SQLAllocHandle(SQL_HANDLE_DBC, henv , &c_hdbc1);
          SQLAllocHandle(SQL_HANDLE_DBC, henv , &c_hdbc2);
          SQLAllocHandle(SQL_HANDLE_DBC, henv , &o_hdbc1);
          SQLAllocHandle(SQL_HANDLE_DBC, henv , &o_hdbc2);
          SQLAllocHandle(SQL_HANDLE_DBC, henv , &o_hdbc3);

          SQLSetConnectAttr(i_hdbc1, SQL_COPT_SS_BCP, (void *)SQL_BCP_ON,
SQL_IS_INTEGER );
          SQLSetConnectAttr(w_hdbc1, SQL_COPT_SS_BCP, (void *)SQL_BCP_ON,
SQL_IS_INTEGER );
          SQLSetConnectAttr(c_hdbc1, SQL_COPT_SS_BCP, (void *)SQL_BCP_ON,
SQL_IS_INTEGER );
          SQLSetConnectAttr(c_hdbc2, SQL_COPT_SS_BCP, (void *)SQL_BCP_ON,
SQL_IS_INTEGER );
          SQLSetConnectAttr(o_hdbc1, SQL_COPT_SS_BCP, (void *)SQL_BCP_ON,
SQL_IS_INTEGER );
          SQLSetConnectAttr(o_hdbc2, SQL_COPT_SS_BCP, (void *)SQL_BCP_ON,
SQL_IS_INTEGER );
          SQLSetConnectAttr(o_hdbc3, SQL_COPT_SS_BCP, (void *)SQL_BCP_ON,
SQL_IS_INTEGER );

          // Open connections to SQL Server

          // Connection 1

          sprintf( szDriverString , "DRIVER={SQL
Server};SERVER=%s;UID=%s;PWD=%s;DATABASE=%s" ,
                                                                  aptr->server,
                                                                  aptr->user,
                                                                  aptr->password,
                                                                  aptr->database );

          rc = SQLSetConnectOption (i_hdbc1, SQL_PACKET_SIZE, aptr->pack_size);
          if (rc != SUCCEED)
                    HandleErrorDBC(i_hdbc1);

          rc = SQLDriverConnect ( i_hdbc1,
                                                        NULL,

          (SQLCHAR*)&szDriverString[0] ,
                                                              SQL_NTS,

          (SQLCHAR*)&szDriverStringOut[0],

          sizeof(szDriverStringOut),
                                                              &cbDriverStringOut,
                                                              SQL_DRIVER_NOPROMPT );
          if (rc != SUCCEED)
                    HandleErrorDBC(i_hdbc1);

          // Connection 2

          sprintf( szDriverString , "DRIVER={SQL
Server};SERVER=%s;UID=%s;PWD=%s;DATABASE=%s" ,
                                                                  aptr->server,
                                                                  aptr->user,
                                                                  aptr->password,
                                                                  aptr->database );

          rc = SQLSetConnectOption (w_hdbc1, SQL_PACKET_SIZE, aptr->pack_size);
          if (rc != SUCCEED)
                    HandleErrorDBC(w_hdbc1);

          rc = SQLDriverConnect ( w_hdbc1,
                                                                        NULL,

          (SQLCHAR*)&szDriverString[0] ,
                                                                        SQL_NTS,
```


©2005 Hewlett-Packard Company. All rights reserved.

```
          (SQLCHAR*)&szDriverStringOut[0],

          sizeof(szDriverStringOut),

          &cbDriverStringOut,

          SQL_DRIVER_NOPROMPT );
          if (rc != SUCCEED)
                    HandleErrorDBC(w_hdbc1);

          // Connection 3

          sprintf( szDriverString , "DRIVER={SQL
Server};SERVER=%s;UID=%s;PWD=%s;DATABASE=%s" ,
                                                                  aptr->server,
                                                                  aptr->user,
                                                                  aptr->password,
                                                                  aptr->database );

          rc = SQLSetConnectOption (c_hdbc1, SQL_PACKET_SIZE, aptr->pack_size);
          if (rc != SUCCEED)
                    HandleErrorDBC(c_hdbc1);

          rc = SQLDriverConnect ( c_hdbc1,
                                                                          NULL,

          (SQLCHAR*)&szDriverString[0] ,
                                                                          SQL_NTS,

          (SQLCHAR*)&szDriverStringOut[0],

          sizeof(szDriverStringOut),

          &cbDriverStringOut,

          SQL_DRIVER_NOPROMPT );
          if (rc != SUCCEED)
                    HandleErrorDBC(c_hdbc1);

          // Connection 4

          sprintf( szDriverString , "DRIVER={SQL
Server};SERVER=%s;UID=%s;PWD=%s;DATABASE=%s" ,
                                                                  aptr->server,
                                                                  aptr->user,
                                                                  aptr->password,
                                                                  aptr->database );

          rc = SQLSetConnectOption (c_hdbc2, SQL_PACKET_SIZE, aptr->pack_size);
          if (rc != SUCCEED)
                    HandleErrorDBC(c_hdbc2);

          rc = SQLDriverConnect ( c_hdbc2,
                                                                          NULL,

          (SQLCHAR*)&szDriverString[0] ,
                                                                          SQL_NTS,

          (SQLCHAR*)&szDriverStringOut[0],

          sizeof(szDriverStringOut),

          &cbDriverStringOut,

          SQL_DRIVER_NOPROMPT );
          if (rc != SUCCEED)
                    HandleErrorDBC(c_hdbc2);

          // Connection 5

          sprintf( szDriverString , "DRIVER={SQL
Server};SERVER=%s;UID=%s;PWD=%s;DATABASE=%s" ,
                                                                  aptr->server,
                                                                  aptr->user,
                                                                  aptr->password,
                                                                  aptr->database );

          rc = SQLSetConnectOption (o_hdbc1, SQL_PACKET_SIZE, aptr->pack_size);
          if (rc != SUCCEED)
                    HandleErrorDBC(o_hdbc1);

          rc = SQLDriverConnect ( o_hdbc1,
                                                                          NULL,

          (SQLCHAR*)&szDriverString[0] ,
                                                                          SQL_NTS,

          (SQLCHAR*)&szDriverStringOut[0],

          sizeof(szDriverStringOut),

          &cbDriverStringOut,

          SQL_DRIVER_NOPROMPT );
          if (rc != SUCCEED)
                    HandleErrorDBC(o_hdbc1);

          // Connection 6

          sprintf( szDriverString , "DRIVER={SQL
Server};SERVER=%s;UID=%s;PWD=%s;DATABASE=%s" ,
                                                                  aptr->server,
                                                                  aptr->user,
                                                                  aptr->password,
                                                                  aptr->database );

          rc = SQLSetConnectOption (o_hdbc2, SQL_PACKET_SIZE, aptr->pack_size);
          if (rc != SUCCEED)
                    HandleErrorDBC(o_hdbc2);

          rc = SQLDriverConnect ( o_hdbc2,
                                                                          NULL,

          (SQLCHAR*)&szDriverString[0] ,
                                                                          SQL_NTS,

          (SQLCHAR*)&szDriverStringOut[0],

          sizeof(szDriverStringOut),

          &cbDriverStringOut,

          SQL_DRIVER_NOPROMPT );
          if (rc != SUCCEED)
```


©2005 Hewlett-Packard Company. All rights reserved.

```
                    HandleErrorDBC(o_hdbc2);

          // Connection 7

          sprintf( szDriverString , "DRIVER={SQL
Server};SERVER=%s;UID=%s;PWD=%s;DATABASE=%s" ,
                                                                  aptr->server,
                                                                  aptr->user,
                                                                  aptr->password,
                                                                  aptr->database );

          rc = SQLSetConnectOption (o_hdbc3, SQL_PACKET_SIZE, aptr->pack_size);
          if (rc != SUCCEED)
                    HandleErrorDBC(o_hdbc3);

          rc = SQLDriverConnect ( o_hdbc3,
                                                                            NULL,

          (SQLCHAR*)&szDriverString[0] ,
                                                                            SQL_NTS,

          (SQLCHAR*)&szDriverStringOut[0],

          sizeof(szDriverStringOut),

          &cbDriverStringOut,

          SQL_DRIVER_NOPROMPT );
          if (rc != SUCCEED)
                    HandleErrorDBC(o_hdbc3);

}

//=====================================================================
//
// Function name: BuildIndex
//
//=====================================================================

void BuildIndex(char          *index_script)
{
          char      cmd[256];

          printf("Starting index creation:  %s\n",index_script);

          sprintf(cmd, "isql -S%s -U%s -P%s -e -i%s\\%s.sql > logs\\%s.log",
                                        aptr->server,
                                        aptr->user,
                                        aptr->password,
                                        aptr->index_script_path,
                                        index_script,
                                        index_script);

          system(cmd);

          printf("Finished index creation:  %s\n",index_script);
}


void HandleErrorDBC (SQLHDBC  hdbc1)
{

          SQLCHAR             SqlState[6], Msg[SQL_MAX_MESSAGE_LENGTH];
          SQLINTEGER  NativeError;
          SQLSMALLINT i, MsgLen;
          SQLRETURN   rc2;
          char                timebuf[128];
          char                datebuf[128];
          FILE                *fp1;

          i = 1;
          while (( rc2 = SQLGetDiagRec(SQL_HANDLE_DBC , hdbc1, i, SqlState ,
&NativeError,
                                                  Msg, sizeof(Msg) , &MsgLen )) !=
SQL_NO_DATA )
          {

                    sprintf( szLastError , "%s" ,  Msg );

                    _strtime(timebuf);
                    _strdate(datebuf);

                    printf( "[%s : %s] %s\n" , datebuf, timebuf, szLastError);

                    fp1 = fopen("logs\\tpccldr.err","w");
                    if (fp1 == NULL)
                              printf("ERROR:  Unable to open errorlog file.\n");
                    else
                    {
                              fprintf(fp1, "[%s : %s] %s\n" , datebuf, timebuf,
szLastError);
                              fclose(fp1);
                    }

                    i++;

          }
}

void HandleErrorSTMT (HSTMT  hstmt1)
{

          SQLCHAR             SqlState[6], Msg[SQL_MAX_MESSAGE_LENGTH];
          SQLINTEGER  NativeError;
          SQLSMALLINT i, MsgLen;
          SQLRETURN   rc2;
          char                timebuf[128];
          char                datebuf[128];
          FILE                *fp1;

          i = 1;
          while (( rc2 = SQLGetDiagRec(SQL_HANDLE_STMT , hstmt1, i, SqlState ,
&NativeError,
                                                  Msg, sizeof(Msg) , &MsgLen )) !=
SQL_NO_DATA )
          {

                    sprintf( szLastError , "%s" ,  Msg );

                    _strtime(timebuf);
                    _strdate(datebuf);

                    printf( "[%s : %s] %s\n" , datebuf, timebuf, szLastError);

                    fp1 = fopen("logs\\tpccldr.err","w");
                    if (fp1 == NULL)
```


©2005 Hewlett-Packard Company. All rights reserved.

```
                                printf("ERROR:  Unable to open errorlog file.\n");
                        else
                        {
                                fprintf(fp1, "[%s : %s] %s\n" , datebuf, timebuf,
szLastError);
                                fclose(fp1);
                        }

                        i++;

                }
}


void FormatDate ( char* szTimeCOutput )
{

                struct tm when;
                time_t now;

                time( &now );
                when  = *localtime( &now );

                mktime( &when );

                // odbc datetime format
                strftime( szTimeCOutput , 30 , "%Y-%m-%d %H:%M:%S.000", &when );

                return;

}

//=====================================================================
//
// Function   : CheckSQL
//
//=====================================================================

void CheckSQL()
{

                RETCODE         rc;

                char                            szDriverString[300];
                char                            szDriverStringOut[1024];
                int                                     SQLBuildFlag;
                char                            resp;

                SQLSMALLINT                     cbDriverStringOut;
                SQLCHAR                         SQLVersion[19];
                SQLINTEGER                      SQLVersionInd;



                SQLAllocHandle(SQL_HANDLE_ENV, SQL_NULL_HANDLE, &henv );

                SQLSetEnvAttr(henv, SQL_ATTR_ODBC_VERSION, (void*)SQL_OV_ODBC3, 0 );

                SQLAllocHandle(SQL_HANDLE_DBC, henv , &v_hdbc);

                SQLSetConnectAttr(v_hdbc, SQL_COPT_SS_BCP, (void *)SQL_BCP_ON,
SQL_IS_INTEGER );

                // Open connection to SQL Server

                sprintf( szDriverString , "DRIVER={SQL Server};SERVER=%s;UID=%s;PWD=%s" ,
                                                                        aptr->server,
                                                                        aptr->user,
                                                                        aptr->password );


                if ( SQLSetConnectAttr( v_hdbc, SQL_ATTR_PACKET_SIZE, (SQLPOINTER)aptr-
>pack_size, SQL_IS_UINTEGER ) != SQL_SUCCESS )
                        HandleErrorDBC(v_hdbc);

                rc = SQLDriverConnect ( v_hdbc,
                                                                NULL,

                (SQLCHAR*)&szDriverString[0] ,
                                                                        SQL_NTS,

                (SQLCHAR*)&szDriverStringOut[0],

                sizeof(szDriverStringOut),
                                                                        &cbDriverStringOut,
                                                                        SQL_DRIVER_NOPROMPT );

                if ((rc != SQL_SUCCESS) && (rc != SQL_SUCCESS_WITH_INFO))
                        HandleErrorDBC(v_hdbc);

                if ( SQLAllocHandle(SQL_HANDLE_STMT, v_hdbc , &v_hstmt) != SQL_SUCCESS )
                        HandleErrorSTMT(v_hstmt);

                rc = SQLBindCol(v_hstmt, 4, SQL_C_CHAR, &SQLVersion, sizeof(SQLVersion),
&SQLVersionInd);

                // issue SQL Server extended stored procedure (xp_msver) to determine
installed version
                rc = SQLExecDirect(v_hstmt, "EXECUTE xp_msver ProductVersion", SQL_NTS);

                if ((rc != SQL_SUCCESS) && (rc != SQL_SUCCESS_WITH_INFO))
                        HandleErrorSTMT(v_hstmt);

                rc = SQLFetch(v_hstmt);

                if (rc != SQL_SUCCESS)
                        HandleErrorDBC(v_hdbc);

                // Check build number to ensure 8.00.194 or higher

                SQLBuildFlag = 1;

                // first check the Major version

                if ( SQLVersion[0] == '8' )
                {
                        if (( SQLVersion[2] == '0') & ( SQLVersion[3] == '0' )      )
                        {
                                if ( SQLVersion[5] == '1' )
                                {
                                        if ( (SQLVersion[6] == '9') &
(SQLVersion[7] == '4') )
                                        {
                                                SQLBuildFlag = 0;
                                                printf("You are using SQL Server
version = %9s\n\n", SQLVersion);
                                        }
```


©2005 Hewlett-Packard Company. All rights reserved.

```
                                        else
                                        {
                                                SQLBuildFlag = 1;
                                        }
                                }
                                else
                                {
                                        if ( SQLVersion[5] == '3' )
                                        {
                                                if ( (SQLVersion[6] >= 53) &
(SQLVersion[7] >= 48) )
                                                {
                                                        SQLBuildFlag = 0;
                                                        printf("You are using
SQL Server version = %9s\n\n", SQLVersion);
                                                }
                                                else
                                                {
                                                        SQLBuildFlag = 1;
                                                }
                                        }
                                }
                        }
                }
                else
                {
                        SQLBuildFlag = 1;
                }

                if ( SQLBuildFlag == 1 )
                {
                        printf("NOTE:  The SQL Server version you are using is not
supported\n");
                        printf("for TPC-C benchmarking.  You currently have SQL Server
version %9s\n",SQLVersion);
                        printf("installed.  Please upgrade to Microsoft SQL Server 2000
(8.00.0194) or better.\n");
                        printf("and re-run the SETUP program.\n\n");
                        printf("Do you wish to continue with setup? (Y/N): ");
                        resp = getchar();
                        if ( ( resp == 'N' ) || (resp == 'n') )
                        {
                                printf("\nSetup Aborted!\n");
                                exit(1);
                        }
                }

                SQLFreeHandle(SQL_HANDLE_STMT, v_hstmt);
                SQLDisconnect(v_hdbc);
                SQLFreeHandle(SQL_HANDLE_DBC, v_hdbc);

                return;

}


//=====================================================================
//
// Function   : CheckDataBase
//
//=====================================================================

void CheckDataBase()
{

        RETCODE         rc;

        char                            szDriverString[300];
        char                            szDriverStringOut[1024];
        char                            TablesBitMap[9] = {"000000000"};
        int                                     i, ExitFlag;

        SQLSMALLINT                     cbDriverStringOut;
        SQLCHAR                         TabName[10];
        SQLINTEGER                      TabNameInd, TabCount, TabCountInd;


        ExitFlag = 0;

        SQLAllocHandle(SQL_HANDLE_ENV, SQL_NULL_HANDLE, &henv );

        SQLSetEnvAttr(henv, SQL_ATTR_ODBC_VERSION, (void*)SQL_OV_ODBC3, 0 );

        SQLAllocHandle(SQL_HANDLE_DBC, henv , &v_hdbc);

        SQLSetConnectAttr(v_hdbc, SQL_COPT_SS_BCP, (void *)SQL_BCP_ON,
SQL_IS_INTEGER );

        // Open connection to SQL Server

        sprintf( szDriverString , "DRIVER={SQL
Server};SERVER=%s;UID=%s;PWD=%s;DATABASE=%s" ,
                                                        aptr->server,
                                                        aptr->user,
                                                        aptr->password,
                                                        aptr->database );

        rc = SQLSetConnectAttr( v_hdbc, SQL_ATTR_PACKET_SIZE, (SQLPOINTER)aptr-
>pack_size, SQL_IS_UINTEGER );
        if (rc != SQL_SUCCESS)
                HandleErrorDBC(v_hdbc);

        rc = SQLDriverConnect ( v_hdbc,
                                                NULL,

        (SQLCHAR*)&szDriverString[0] ,
                                                        SQL_NTS,

        (SQLCHAR*)&szDriverStringOut[0],

        sizeof(szDriverStringOut),
                                                        &cbDriverStringOut,
                                                        SQL_DRIVER_NOPROMPT );

        // if the rc is SQL_ERROR, the the TPCC database probably does not exist
        if (rc == SQL_ERROR)
        {
                printf("The database TPCC does not appear to exist!\n");
                printf("\nCheck LOGS\\ directory for database creation
errors.\n");

                // cleanup database connections and handles
                SQLFreeHandle(SQL_HANDLE_STMT, v_hstmt);
                SQLDisconnect(v_hdbc);
                SQLFreeHandle(SQL_HANDLE_DBC, v_hdbc);
```


©2005 Hewlett-Packard Company. All rights reserved.

```
                    // since there is not a database, exit back to SETUP.CMD
                    exit(1);
          }

          if ( SQLAllocHandle(SQL_HANDLE_STMT, v_hdbc , &v_hstmt) != SQL_SUCCESS )
                    HandleErrorDBC(v_hdbc);

          if ( SQLBindCol(v_hstmt, 1, SQL_C_ULONG, &TabCount, 0, &TabCountInd) !=
SQL_SUCCESS )
                    HandleErrorSTMT(v_hstmt);

          // count the number of user tables from sysobjects
          rc = SQLExecDirect(v_hstmt, "select count(*) from sysobjects where xtype =
\'U\'", SQL_NTS);
          if ((rc != SQL_SUCCESS) && (rc != SQL_SUCCESS_WITH_INFO))
                    HandleErrorSTMT(v_hstmt);

          if ( SQLFetch(v_hstmt) != SQL_SUCCESS )
                    HandleErrorSTMT(v_hstmt);

          // if the number of tables is less than 9, select all the user tables in
TPCC
          if (TabCount != 9)
          {
                    SQLFreeHandle(SQL_HANDLE_STMT, v_hstmt);

                    SQLAllocHandle(SQL_HANDLE_STMT, v_hdbc , &v_hstmt);

                    if ( SQLBindCol(v_hstmt, 1, SQL_C_CHAR, &TabName,
sizeof(TabName), &TabNameInd) != SQL_SUCCESS )
                              HandleErrorSTMT(v_hstmt);

                    // select the list of user tables into a result set
                    rc = SQLExecDirect(v_hstmt, "select * from sysobjects where
xtype = \'U\'", SQL_NTS);
                    if ((rc != SQL_SUCCESS) && (rc != SQL_SUCCESS_WITH_INFO))
                              HandleErrorSTMT(v_hstmt);

                    // go through the result set and set the bitmap for each found
table
                    // set the bitmap to '1' if the table name is found

                    while ((rc = SQLFetch(v_hstmt)) != SQL_NO_DATA)
                    {
                              switch( TabName[0] )
                              {
                              case 'w':
                                        TablesBitMap[0] = '1';
                                        break;
                              case 'd':
                                        TablesBitMap[1] = '1';
                                        break;
                              case 'c':
                                        TablesBitMap[2] = '1';
                                        break;
                              case 'h':
                                        TablesBitMap[3] = '1';
                                        break;
                              case 'n':
                                        TablesBitMap[4] = '1';
                                        break;
                              case 'o':
                                        if (TabName[5] = 's')
                                                  TablesBitMap[5] = '1';
                                        if (TabName[5] = '_')
                                                  TablesBitMap[6] = '1';
                                        break;
                              case 'i':
                                        TablesBitMap[7] = '1';
                                        break;
                              case 's':
                                        TablesBitMap[8] = '1';
                                        break;
                              }
                    }

                    // a '0' ExitFlag means do NOT exit the loader early, a '1'
means exit the loader early
                    ExitFlag = 0;

                    // interate through the bitmap to display which table(s) is
actually missing
                    for (i = 0; i <= 8; i++)
                    {
                              switch(i)
                              {
                              case 0:
                                        if (TablesBitMap[i] == '0')
                                        {
                                                  printf("The Warehouse table is
missing or damaged.\n");
                                                  ExitFlag = 1;
                                        }
                                        break;
                              case 1:
                                        if (TablesBitMap[i] == '0')
                                        {
                                                  printf("The District table is
missing or damaged.\n");
                                                  ExitFlag = 1;
                                        }
                                        break;
                              case 2:
                                        if (TablesBitMap[i] == '0')
                                        {
                                                  printf("The Customer table is
missing or damaged.\n");
                                                  ExitFlag = 1;
                                        }
                                        break;
                              case 3:
                                        if (TablesBitMap[i] == '0')
                                        {
                                                  printf("The History table is
missing or damaged.\n");
                                                  ExitFlag = 1;
                                        }
                                        break;
                              case 4:
                                        if (TablesBitMap[i] == '0')
                                        {
                                                  printf("The New_Order table is
missing or damaged.\n");
                                                  ExitFlag = 1;
                                        }
                                        break;
```


©2005 Hewlett-Packard Company. All rights reserved.

```
                                case 5:
                                          if (TablesBitMap[i] == '0')
                                          {
                                                    printf("The Orders table is
missing or damaged.\n");
                                                    ExitFlag = 1;
                                          }
                                          break;
                                case 6:
                                          if (TablesBitMap[i] == '0')
                                          {
                                                    printf("The Order_Line table is
missing or damaged.\n");
                                                    ExitFlag = 1;
                                          }
                                          break;
                                case 7:
                                          if (TablesBitMap[i] == '0')
                                          {
                                                    printf("The Item table is missing
or damaged.\n");
                                                    ExitFlag = 1;
                                          }
                                          break;
                                case 8:
                                          if (TablesBitMap[i] == '0')
                                          {
                                                    printf("The Stock table is missing
or damaged.\n");
                                                    ExitFlag = 1;
                                          }
                                          break;
                                }
                    }

                    // if one or more tables are missing, display message and exit
the loader
                    if (ExitFlag = 1)
                    {
                                printf("\nExiting TPC-C Loader!\n");
                                printf("\nCheck LOGS\\ directory for database\n");
                                printf("or table creation errors.\n");

                                // cleanup database connections and handles
                                SQLFreeHandle(SQL_HANDLE_STMT, v_hstmt);
                                SQLDisconnect(v_hdbc);
                                SQLFreeHandle(SQL_HANDLE_DBC, v_hdbc);

                                exit(1);
                    }
          }

          // cleanup database connections and handles
          SQLFreeHandle(SQL_HANDLE_STMT, v_hstmt);
          SQLDisconnect(v_hdbc);
          SQLFreeHandle(SQL_HANDLE_DBC, v_hdbc);

          return;
}
```


©2005 Hewlett-Packard Company. All rights reserved.

Appendix C: Tunable Parameters

Microsoft SQL Server 2000 Installation Procedures

```
Microsoft SQL Server 2000 Installation Procedures
Type of installation: custom
During the custom installation, use the default
settings for all except the following two areas:
Services accounts:
SQL Server - local system account
SQL Server Agent - local system account
Set the sort order/collation as
SQL_Latin1_General_CP437_BIN
```

Microsoft SQL Server Configuration Parameters

```
1> 2> 3> 4> 5> 6> 7> 8> 9> 10> 11>
--  File:     VERSION.SQL
--            Microsoft TPC-C Benchmark Kit Ver. 4.22
--            Copyright Microsoft, 2001
--  Purpose:  Returns SQL Server version string



print " "
select convert(char(30), getdate(),9)
print " "

 ------------------------------
 Apr 11 2005  8:08:04:653PM

(1 row affected)

1> 2> 3>
select @@version
 -----------------------------------------------------
--------------------------
          ----------------------------------------------
----------------------------
          ----------------------------------------------
----------------------------
          -----------------------------------
 Microsoft SQL Server  2000 - 8.00.2026 (Intel X86)
          Dec  9 2004 23:00:00
          Co
          pyright (c) 1988-2003 Microsoft Corporation
          Enterprise Edition on Wind
          ows NT 5.2 (Build 3790: Service Pack 1)



(1 row affected)
1> 2>
1> 2> 3> 4> 5> 6> 7> 8> 9> 10>
--  File:     CONFIG.SQL
--            Microsoft TPC-C Benchmark Kit Ver. 4.22
--            Copyright Microsoft, 2001
--  Purpose:  Collects SQL Server configuration
parameters


print " "
select convert(char(30), getdate(),9)
print " "

 ------------------------------
 Apr 11 2005  8:08:05:450PM

(1 row affected)

1> 2> 3> Configuration option 'show advanced options'
changed from 1 to 1. Run the RECONFIGURE statement to
install.

sp_configure "show advanced",1
1> 2> reconfigure with override
1> 2> sp_configure
 name
minimum     maximum     config_value run_value
 -----------------------------------------------------
------------------ ----------- ----------- ----------
-- -----------
 affinity mask
-2147483648  2147483647          255         255
 allow updates
0           1            0           0
 awe enabled
0           1            1           1
 c2 audit mode
0           1            0           0
 cost threshold for parallelism
0       32767            5           5
 Cross DB Ownership Chaining
0           1            0           0
 cursor threshold
-1  2147483647           -1          -1
 default full-text language
0  2147483647         1033        1033
 default language
0        9999            0           0
 fill factor (%)
0         100            0           0
 index create memory (KB)
704  2147483647          704         704
 lightweight pooling
0           1            1           1
 locks
5000  2147483647            0           0
 max degree of parallelism
0          32            1           1
 max server memory (MB)
4  2147483647        63900       63900
 max text repl size (B)
0  2147483647        65536       65536
 max worker threads
32       32767          688         688
 media retention
0         365            0           0
 min memory per query (KB)
512  2147483647          512         512
 min server memory (MB)
0  2147483647            0           0
 nested triggers
0           1            1           1
 network packet size (B)
512       32767         2048        2048
 open objects
0  2147483647            0           0
 priority boost
0           1            1           1
 query governor cost limit
0  2147483647            0           0
 query wait (s)
-1  2147483647           -1          -1
 recovery interval (min)
0       32767           96          96
 remote access
0           1            1           1
 remote login timeout (s)
0  2147483647           20          20
 remote proc trans
0           1            0           0
 remote query timeout (s)
0  2147483647          600         600
 scan for startup procs
0           1            0           0
 set working set size
0           1            0           0
 show advanced options
0           1            1           1
 two digit year cutoff
1753        9999         2049        2049
 user connections
0       32767            0           0
 user options
0       32767            0           0

1>
```


© 2005 Hewlett-Packard Company. All rights reserved.

Database Server System Configuration

```
System Information report written at: 04/18/05
14:49:45
System Name: TWIN
[System Summary]

Item      Value
OS Name   Microsoft(R) Windows(R) Server 2003,
Enterprise Edition
Version   5.2.3790 Service Pack 1 Build 3790
Other OS Description          Not Available
OS Manufacturer     Microsoft Corporation
System Name         TWIN
System Manufacturer HP
System Model        ProLiant DL585 G1
System Type         X86-based PC
Processor x86 Family 15 Model 33 Stepping 0
AuthenticAMD ~2199 Mhz
Processor x86 Family 15 Model 33 Stepping 0
AuthenticAMD ~2199 Mhz
Processor x86 Family 15 Model 33 Stepping 0
AuthenticAMD ~2199 Mhz
Processor x86 Family 15 Model 33 Stepping 0
AuthenticAMD ~2199 Mhz
Processor x86 Family 15 Model 33 Stepping 0
AuthenticAMD ~2199 Mhz
Processor x86 Family 15 Model 33 Stepping 0
AuthenticAMD ~2199 Mhz
Processor x86 Family 15 Model 33 Stepping 0
AuthenticAMD ~2199 Mhz
Processor x86 Family 15 Model 33 Stepping 0
AuthenticAMD ~2199 Mhz
BIOS Version/Date   HP A01, 4/1/2005
SMBIOS Version      2.3
Windows Directory   C:\WINDOWS
System Directory    C:\WINDOWS\system32
Boot Device         \Device\HarddiskVolume20
Locale    United States
Hardware Abstraction Layer    Version =
"5.2.3790.1830 (srv03_sp1_rtm.050324-1447)"
User Name TWIN\Administrator
Time Zone Central Daylight Time
Total Physical Memory         65,367.29 MB
Available Physical Memory     3.14 GB
Total Virtual Memory          1.26 GB
Available Virtual Memory      1.14 GB
Page File Space     2.00 GB
Page File C:\pagefile.sys

[Hardware Resources]



[Conflicts/Sharing]

Resource  Device
I/O Port 0x0000A000-0x0000BFFF          PCI standard
PCI-to-PCI bridge
I/O Port 0x0000A000-0x0000BFFF          Smart Array
642 Controller (Non-Miniport)

Memory Address 0xF7800000-0xF79FFFFF    PCI standard
PCI-to-PCI bridge
Memory Address 0xF7800000-0xF79FFFFF    PCI standard
PCI-to-PCI bridge

I/O Port 0x00000000-0x000003AF          PCI bus
I/O Port 0x00000000-0x000003AF          Direct memory
access controller

I/O Port 0x000003C0-0x000003DF          PCI bus
I/O Port 0x000003C0-0x000003DF          PCI standard
PCI-to-PCI bridge
I/O Port 0x000003C0-0x000003DF          RAGE XL PCI
Family (Microsoft Corporation)

Memory Address 0xF7E00000-0xF7FFFFFF    PCI standard
PCI-to-PCI bridge
Memory Address 0xF7E00000-0xF7FFFFFF    PCI standard
PCI-to-PCI bridge

I/O Port 0x00009000-0x00009FFF          PCI standard
PCI-to-PCI bridge
I/O Port 0x00009000-0x00009FFF          PCI standard
PCI-to-PCI bridge
I/O Port 0x00009000-0x00009FFF          Smart Array
6400 Controller (Non-Miniport)

I/O Port 0x00006000-0x00007FFF          PCI standard
PCI-to-PCI bridge
I/O Port 0x00006000-0x00007FFF          PCI standard
PCI-to-PCI bridge
I/O Port 0x00006000-0x00007FFF          Smart Array
6400 Controller (Non-Miniport)

Memory Address 0xF7A00000-0xF7FFFFFF    PCI bus
Memory Address 0xF7A00000-0xF7FFFFFF    PCI standard
PCI-to-PCI bridge
Memory Address 0xF7A00000-0xF7FFFFFF    PCI standard
PCI-to-PCI bridge

I/O Port 0x0000B000-0x0000BFFF          PCI standard
PCI-to-PCI bridge
I/O Port 0x0000B000-0x0000BFFF          Smart Array
6400 Controller (Non-Miniport)

I/O Port 0x00005000-0x00005FFF          PCI standard
PCI-to-PCI bridge
I/O Port 0x00005000-0x00005FFF          Compaq Smart
Array 5i Controller

I/O Port 0x000000A0-0x000000A1          Motherboard
resources
I/O Port 0x000000A0-0x000000A1          Programmable
interrupt controller

IRQ 19    Standard OpenHCD USB Host Controller
IRQ 19    Standard OpenHCD USB Host Controller

Memory Address 0xA0000-0xBFFFF          PCI bus
Memory Address 0xA0000-0xBFFFF          PCI standard
PCI-to-PCI bridge
Memory Address 0xA0000-0xBFFFF          RAGE XL PCI
Family (Microsoft Corporation)

Memory Address 0xF7B00000-0xF7BFFFFF    PCI standard
PCI-to-PCI bridge
Memory Address 0xF7B00000-0xF7BFFFFF    PCI standard
PCI-to-PCI bridge

I/O Port 0x00007000-0x00007FFF          PCI standard
PCI-to-PCI bridge
I/O Port 0x00007000-0x00007FFF          Smart Array
6400 Controller (Non-Miniport)

Memory Address 0xF5F00000-0xF79FFFFF    PCI bus
Memory Address 0xF5F00000-0xF79FFFFF    PCI standard
PCI-to-PCI bridge

Memory Address 0xF5E00000-0xF5EFFFFF    PCI bus
Memory Address 0xF5E00000-0xF5EFFFFF    PCI standard
PCI-to-PCI bridge

I/O Port 0x000003B0-0x000003BB          PCI bus
I/O Port 0x000003B0-0x000003BB          PCI standard
PCI-to-PCI bridge
I/O Port 0x000003B0-0x000003BB          RAGE XL PCI
Family (Microsoft Corporation)

I/O Port 0x00004000-0x00004FFF          PCI standard
PCI-to-PCI bridge
I/O Port 0x00004000-0x00004FFF          Base System
Device

I/O Port 0x0000C000-0x0000DFFF          PCI standard
PCI-to-PCI bridge
I/O Port 0x0000C000-0x0000DFFF          PCI standard
PCI-to-PCI bridge
I/O Port 0x0000C000-0x0000DFFF          Smart Array
6400 Controller (Non-Miniport)

I/O Port 0x00008000-0x0000DFFF          PCI bus
I/O Port 0x00008000-0x0000DFFF          PCI standard
PCI-to-PCI bridge
I/O Port 0x00008000-0x0000DFFF          PCI standard
PCI-to-PCI bridge
I/O Port 0x00008000-0x0000DFFF          Smart Array
6400 Controller (Non-Miniport)

I/O Port 0x0000D000-0x0000DFFF          PCI standard
PCI-to-PCI bridge
I/O Port 0x0000D000-0x0000DFFF          Smart Array
6400 Controller (Non-Miniport)

I/O Port 0x00000020-0x00000021          Motherboard
resources
I/O Port 0x00000020-0x00000021          Programmable
interrupt controller


[DMA]
```


© 2005 Hewlett-Packard Company. All rights reserved.

```
Resource  Device    Status
Channel 7 Direct memory access controller         OK

Channel 2 Standard floppy disk controller         OK


[Forced Hardware]

Device    PNP Device ID

[I/O]

Resource  Device    Status
0x00000000-0x000003AF         PCI bus   OK
0x00000000-0x000003AF         Direct memory access
controller          OK
0x000003B0-0x000003BB         PCI bus   OK
0x000003B0-0x000003BB         PCI standard PCI-to-PCI
bridge    OK
0x000003B0-0x000003BB         RAGE XL PCI Family
(Microsoft Corporation)       OK
0x000003C0-0x000003DF         PCI bus   OK
0x000003C0-0x000003DF         PCI standard PCI-to-PCI
bridge    OK
0x000003C0-0x000003DF         RAGE XL PCI Family
(Microsoft Corporation)       OK
0x000003E0-0x00000FFF         PCI bus   OK
0x00001000-0x00007FFF         PCI bus   OK
0x00004000-0x00004FFF         PCI standard PCI-to-PCI
bridge    OK
0x00004000-0x00004FFF         Base System Device  OK

0x00004800-0x000048FF         Base System Device  OK

0x00004400-0x000044FF         RAGE XL PCI Family
(Microsoft Corporation)       OK
0x00000A79-0x00000A79         ISAPNP Read Data Port
          OK
0x00000279-0x00000279         ISAPNP Read Data Port
          OK
0x00000274-0x00000277         ISAPNP Read Data Port
          OK
0x00000020-0x00000021         Motherboard resources
          OK
0x00000020-0x00000021         Programmable interrupt
controller          OK
0x00000050-0x00000051         Motherboard resources
          OK
0x00000092-0x00000092         Motherboard resources
          OK
0x000000A0-0x000000A1         Motherboard resources
          OK
0x000000A0-0x000000A1         Programmable interrupt
controller          OK
0x000000F0-0x000000F1         Motherboard resources
          OK
0x00000230-0x00000233         Motherboard resources
          OK
0x00000260-0x00000267         Motherboard resources
          OK
0x000004D0-0x000004D1         Motherboard resources
          OK
0x00000800-0x0000081F         Motherboard resources
          OK
0x00000900-0x00000903         Motherboard resources
          OK
0x00000904-0x00000907         Motherboard resources
          OK
0x00000908-0x0000090B         Motherboard resources
          OK
0x0000090C-0x0000092E         Motherboard resources
          OK
0x0000092F-0x0000092F         Motherboard resources
          OK
0x00000930-0x000009FF         Motherboard resources
          OK
0x00000C80-0x00000C87         Motherboard resources
          OK
0x00000CF9-0x00000CF9         Motherboard resources
          OK
0x000002F8-0x000002FF         Motherboard resources
          OK
0x00000040-0x00000043         System timer        OK

0x00000080-0x0000008F         Direct memory access
controller          OK
0x000000C0-0x000000DF         Direct memory access
controller          OK
0x00000061-0x00000061         System speaker      OK

0x00000060-0x00000060         Standard 101/102-Key or
Microsoft Natural PS/2 Keyboard         OK
0x00000064-0x00000064         Standard 101/102-Key or
Microsoft Natural PS/2 Keyboard         OK
0x0000002E-0x0000002F         Extended IO Bus     OK

0x00000220-0x00000223         Extended IO Bus     OK

0x00000240-0x0000025F         Extended IO Bus     OK

0x00000070-0x00000073         Extended IO Bus     OK

0x000003F8-0x000003FF         Communications Port
(COM1)    OK
0x000003F2-0x000003F5         Standard floppy disk
controller          OK
0x000003F7-0x000003F7         Standard floppy disk
controller          OK
0x00002000-0x0000200F         Standard Dual Channel
PCI IDE Controller  OK
0x000001F0-0x000001F7         Primary IDE Channel OK

0x000003F6-0x000003F6         Primary IDE Channel OK

0x00000170-0x00000177         Secondary IDE Channel
          OK
0x00000376-0x00000376         Secondary IDE Channel
          OK
0x00005000-0x00005FFF         PCI standard PCI-to-PCI
bridge    OK
0x00005000-0x00005FFF         Compaq Smart Array 5i
Controller          OK
0x00006000-0x00007FFF         PCI standard PCI-to-PCI
bridge    OK
0x00006000-0x00007FFF         PCI standard PCI-to-PCI
bridge    OK
0x00006000-0x00007FFF         Smart Array 6400
Controller (Non-Miniport)     OK
0x00006400-0x000064FF         Smart Array 6400
Controller U320 Expansion Module (Non-Miniport)   OK

0x00007000-0x00007FFF         PCI standard PCI-to-PCI
bridge    OK
0x00007000-0x00007FFF         Smart Array 6400
Controller (Non-Miniport)     OK
0x00007400-0x000074FF         Smart Array 6400
Controller U320 Expansion Module (Non-Miniport)   OK

0x00008000-0x0000DFFF         PCI bus   OK
0x00008000-0x0000DFFF         PCI standard PCI-to-PCI
bridge    OK
0x00008000-0x0000DFFF         PCI standard PCI-to-PCI
bridge    OK
0x00008000-0x0000DFFF         Smart Array 6400
Controller (Non-Miniport)     OK
0x00008400-0x000084FF         Smart Array 6400
Controller U320 Expansion Module (Non-Miniport)   OK

0x00009000-0x00009FFF         PCI standard PCI-to-PCI
bridge    OK
0x00009000-0x00009FFF         PCI standard PCI-to-PCI
bridge    OK
0x00009000-0x00009FFF         Smart Array 6400
Controller (Non-Miniport)     OK
0x00009400-0x000094FF         Smart Array 6400
Controller U320 Expansion Module (Non-Miniport)   OK

0x0000A000-0x0000BFFF         PCI standard PCI-to-PCI
bridge    OK
0x0000A000-0x0000BFFF         Smart Array 642
Controller (Non-Miniport)     OK
0x0000B000-0x0000BFFF         PCI standard PCI-to-PCI
bridge    OK
0x0000B000-0x0000BFFF         Smart Array 6400
Controller (Non-Miniport)     OK
0x0000B400-0x0000B4FF         Smart Array 6400
Controller U320 Expansion Module (Non-Miniport)   OK

0x0000C000-0x0000DFFF         PCI standard PCI-to-PCI
bridge    OK
0x0000C000-0x0000DFFF         PCI standard PCI-to-PCI
bridge    OK
0x0000C000-0x0000DFFF         Smart Array 6400
Controller (Non-Miniport)     OK
0x0000C400-0x0000C4FF         Smart Array 6400
Controller U320 Expansion Module (Non-Miniport)   OK

0x0000D000-0x0000DFFF         PCI standard PCI-to-PCI
bridge    OK
0x0000D000-0x0000DFFF         Smart Array 6400
Controller (Non-Miniport)     OK
0x0000D400-0x0000D4FF         Smart Array 6400
Controller U320 Expansion Module (Non-Miniport)   OK


[IRQs]
```


© 2005 Hewlett-Packard Company. All rights reserved.

```
Resource  Device    Status
IRQ 9     Microsoft ACPI-Compliant System         OK

IRQ 19    Standard OpenHCD USB Host Controller    OK

IRQ 19    Standard OpenHCD USB Host Controller    OK

IRQ 7     Base System Device  OK
IRQ 10    Base System Device  OK
IRQ 0     System timer        OK
IRQ 1     Standard 101/102-Key or Microsoft Natural
PS/2 Keyboard       OK
IRQ 12    PS/2 Compatible Mouse         OK
IRQ 4     Communications Port (COM1)    OK
IRQ 6     Standard floppy disk controller         OK

IRQ 14    Primary IDE Channel OK
IRQ 18    Compaq Smart Array 5i Controller        OK

IRQ 25    HP NC7782 Gigabit Server Adapter        OK

IRQ 24    HP NC7782 Gigabit Server Adapter #2     OK

IRQ 28    Smart Array 6400 Controller (Non-Miniport)
          OK
IRQ 29    Smart Array 6400 Controller U320 Expansion
Module (Non-Miniport)         OK
IRQ 30    Smart Array 6400 Controller (Non-Miniport)
          OK
IRQ 31    Smart Array 6400 Controller U320 Expansion
Module (Non-Miniport)         OK
IRQ 32    Smart Array 6400 Controller (Non-Miniport)
          OK
IRQ 33    Smart Array 6400 Controller U320 Expansion
Module (Non-Miniport)         OK
IRQ 36    Smart Array 6400 Controller (Non-Miniport)
          OK
IRQ 37    Smart Array 6400 Controller U320 Expansion
Module (Non-Miniport)         OK
IRQ 40    Smart Array 6400 Controller (Non-Miniport)
          OK
IRQ 41    Smart Array 6400 Controller U320 Expansion
Module (Non-Miniport)         OK
IRQ 42    Smart Array 642 Controller (Non-Miniport)
          OK
IRQ 44    Smart Array 6400 Controller (Non-Miniport)
          OK
IRQ 45    Smart Array 6400 Controller U320 Expansion
Module (Non-Miniport)         OK
IRQ 46    Smart Array 6400 Controller (Non-Miniport)
          OK
IRQ 47    Smart Array 6400 Controller U320 Expansion
Module (Non-Miniport)         OK

[Memory]

Resource  Device    Status
0xA0000-0xBFFFF     PCI bus   OK
0xA0000-0xBFFFF     PCI standard PCI-to-PCI bridge
          OK
0xA0000-0xBFFFF     RAGE XL PCI Family (Microsoft
Corporation)        OK
0xF5E00000-0xF5EFFFFF         PCI bus   OK
0xF5E00000-0xF5EFFFFF         PCI standard PCI-to-PCI
bridge    OK
0xF5F00000-0xF79FFFFF         PCI bus   OK
0xF5F00000-0xF79FFFFF         PCI standard PCI-to-PCI
bridge    OK
0xF76F0000-0xF76F0FFF         Standard OpenHCD USB
Host Controller     OK
0xF76E0000-0xF76E0FFF         Standard OpenHCD USB
Host Controller     OK
0xF76B0000-0xF76B01FF         Base System Device  OK

0xF76A0000-0xF76A07FF         Base System Device  OK

0xF7690000-0xF7691FFF         Base System Device  OK

0xF7600000-0xF767FFFF         Base System Device  OK

0xF6000000-0xF6FFFFFF         RAGE XL PCI Family
(Microsoft Corporation)       OK
0xF5FF0000-0xF5FF0FFF         RAGE XL PCI Family
(Microsoft Corporation)       OK
0xF7700000-0xF77FFFFF         PCI standard PCI-to-PCI
bridge    OK
0xF77C0000-0xF77FFFFF         Compaq Smart Array 5i
Controller          OK
0xF5EF0000-0xF5EF3FFF         Compaq Smart Array 5i
Controller          OK
0xF77B0000-0xF77BFFFF         HP NC7782 Gigabit
Server Adapter      OK
0xF77A0000-0xF77AFFFF         HP NC7782 Gigabit
Server Adapter #2   OK
0xF7800000-0xF79FFFFF         PCI standard PCI-to-PCI
bridge    OK
0xF7800000-0xF79FFFFF         PCI standard PCI-to-PCI
bridge    OK
0xF78F0000-0xF78F1FFF         Smart Array 6400
Controller (Non-Miniport)     OK
0xF7870000-0xF7871FFF         Smart Array 6400
Controller U320 Expansion Module (Non-Miniport)   OK

0xF7900000-0xF79FFFFF         PCI standard PCI-to-PCI
bridge    OK
0xF79F0000-0xF79F1FFF         Smart Array 6400
Controller (Non-Miniport)     OK
0xF7970000-0xF7971FFF         Smart Array 6400
Controller U320 Expansion Module (Non-Miniport)   OK

0xF7A00000-0xF7FFFFFF         PCI bus   OK
0xF7A00000-0xF7FFFFFF         PCI standard PCI-to-PCI
bridge    OK
0xF7A00000-0xF7FFFFFF         PCI standard PCI-to-PCI
bridge    OK
0xF7AF0000-0xF7AF1FFF         Smart Array 6400
Controller (Non-Miniport)     OK
0xF7A70000-0xF7A71FFF         Smart Array 6400
Controller U320 Expansion Module (Non-Miniport)   OK

0xF7B00000-0xF7BFFFFF         PCI standard PCI-to-PCI
bridge    OK
0xF7B00000-0xF7BFFFFF         PCI standard PCI-to-PCI
bridge    OK
0xF7BF0000-0xF7BF1FFF         Smart Array 6400
Controller (Non-Miniport)     OK
0xF7B70000-0xF7B71FFF         Smart Array 6400
Controller U320 Expansion Module (Non-Miniport)   OK

0xF7C00000-0xF7DFFFFF         PCI standard PCI-to-PCI
bridge    OK
0xF7D00000-0xF7DFFFFF         PCI standard PCI-to-PCI
bridge    OK
0xF7DF0000-0xF7DF1FFF         Smart Array 6400
Controller (Non-Miniport)     OK
0xF7D70000-0xF7D71FFF         Smart Array 6400
Controller U320 Expansion Module (Non-Miniport)   OK

0xF7CF0000-0xF7CF1FFF         Smart Array 642
Controller (Non-Miniport)     OK
0xF7C80000-0xF7CBFFFF         Smart Array 642
Controller (Non-Miniport)     OK
0xF7E00000-0xF7FFFFFF         PCI standard PCI-to-PCI
bridge    OK
0xF7E00000-0xF7FFFFFF         PCI standard PCI-to-PCI
bridge    OK
0xF7EF0000-0xF7EF1FFF         Smart Array 6400
Controller (Non-Miniport)     OK
0xF7E70000-0xF7E71FFF         Smart Array 6400
Controller U320 Expansion Module (Non-Miniport)   OK

0xF7F00000-0xF7FFFFFF         PCI standard PCI-to-PCI
bridge    OK
0xF7FF0000-0xF7FF1FFF         Smart Array 6400
Controller (Non-Miniport)     OK
0xF7F70000-0xF7F71FFF         Smart Array 6400
Controller U320 Expansion Module (Non-Miniport)   OK


[Components]



[Multimedia]



[Audio Codecs]

CODEC     Manufacturer        Description
          Status    File      Version   Size
          Creation Date
c:\windows\system32\msadp32.acm         Microsoft
Corporation                   OK
          C:\WINDOWS\system32\MSADP32.ACM
          5.2.3790.0 (srv03_rtm.030324-2048)
          14.50 KB (14,848 bytes)       3/25/2003
6:00 AM
c:\windows\system32\msgsm32.acm         Microsoft
Corporation                   OK
          C:\WINDOWS\system32\MSGSM32.ACM
          5.2.3790.0 (srv03_rtm.030324-2048)
          20.50 KB (20,992 bytes)       3/25/2003
6:00 AM
c:\windows\system32\imaadp32.acm        Microsoft
Corporation                   OK
          C:\WINDOWS\system32\IMAADP32.ACM
          5.2.3790.0 (srv03_rtm.030324-2048)
```


© 2005 Hewlett-Packard Company. All rights reserved.

```
          15.50 KB (15,872 bytes)       3/25/2003
6:00 AM
c:\windows\system32\sl_anet.acm         Sipro Lab
Telecom Inc.        Sipro Lab Telecom Audio Codec OK
          C:\WINDOWS\system32\SL_ANET.ACM
          3.02      84.00 KB (86,016 bytes)
          3/25/2003 6:00 AM
c:\windows\system32\msg723.acm          Microsoft
Corporation                 OK
          C:\WINDOWS\system32\MSG723.ACM
          5.2.3790.1830       120.00 KB (122,880
bytes)    4/5/2005 11:23 AM
c:\windows\system32\msaud32.acm         Microsoft
Corporation         Windows Media Audio Codec     OK
          C:\WINDOWS\system32\MSAUD32.ACM
          8.00.00.4487        288.00 KB (294,912
bytes)    3/25/2003 6:00 AM
c:\windows\system32\tssoft32.acm        DSP GROUP,
INC.                OK
          C:\WINDOWS\system32\TSSOFT32.ACM
          1.01      9.50 KB (9,728 bytes)
          3/25/2003 6:00 AM
c:\windows\system32\l3codeca.acm        Fraunhofer
Institut Integrierte Schaltungen IIS    Fraunhofer
IIS MPEG Layer-3 Codec      OK
          C:\WINDOWS\system32\L3CODECA.ACM        1,
9, 0, 0305          284.00 KB (290,816 bytes)
          3/25/2003 6:00 AM
c:\windows\system32\msg711.acm          Microsoft
Corporation                 OK
          C:\WINDOWS\system32\MSG711.ACM
          5.2.3790.0 (srv03_rtm.030324-2048)
          10.00 KB (10,240 bytes)       3/25/2003
6:00 AM

[Video Codecs]

CODEC     Manufacturer        Description
          Status    File      Version   Size
          Creation Date
c:\windows\system32\msrle32.dll         Microsoft
Corporation                 OK
          C:\WINDOWS\system32\MSRLE32.DLL
          5.2.3790.0 (srv03_rtm.030324-2048)
          10.50 KB (10,752 bytes)       3/25/2003
6:00 AM
c:\windows\system32\msyuv.dll Microsoft Corporation
                    OK
          C:\WINDOWS\system32\MSYUV.DLL 5.2.3790.0
(srv03_rtm.030324-2048)       16.50 KB (16,896 bytes)
          3/24/2003 7:49 PM
c:\windows\system32\msh261.drv          Microsoft
Corporation                 OK
          C:\WINDOWS\system32\MSH261.DRV
          5.2.3790.1830       184.00 KB (188,416
bytes)    4/5/2005 11:23 AM
c:\windows\system32\msvidc32.dll        Microsoft
Corporation                 OK
          C:\WINDOWS\system32\MSVIDC32.DLL
          5.2.3790.0 (srv03_rtm.030324-2048)
          26.50 KB (27,136 bytes)       3/25/2003
6:00 AM
c:\windows\system32\iyuv_32.dll         Microsoft
Corporation                 OK
          C:\WINDOWS\system32\IYUV_32.DLL
          5.2.3790.1830 (srv03_sp1_rtm.050324-1447)
          46.50 KB (47,616 bytes)       4/5/2005
11:23 AM
c:\windows\system32\msh263.drv          Microsoft
Corporation                 OK
          C:\WINDOWS\system32\MSH263.DRV
          5.2.3790.1830       288.00 KB (294,912
bytes)    4/5/2005 11:23 AM
c:\windows\system32\tsbyuv.dll          Microsoft
Corporation                 OK
          C:\WINDOWS\system32\TSBYUV.DLL
          5.2.3790.0 (srv03_rtm.030324-2048)
          8.00 KB (8,192 bytes)         3/24/2003
7:50 PM

[CD-ROM]

Item      Value
Drive     D:
Description         CD-ROM Drive
Media Loaded        No
Media Type          CD-ROM
Name      TEAC CD-224E
Manufacturer        (Standard CD-ROM drives)
Status    OK
Transfer Rate       Not Available
SCSI Target ID      0
PNP Device ID       IDE\CDROMTEAC_CD-
224E_____________________________9.9A____\5&2DC47F1C&0
&0.0.0
Driver    c:\windows\system32\drivers\cdrom.sys
(5.2.3790.1830 (srv03_sp1_rtm.050324-1447), 51.00 KB
(52,224 bytes), 3/25/2003 6:00 AM)

[Sound Device]

Item      Value

[Display]

Item      Value
Name      RAGE XL PCI Family (Microsoft Corporation)

PNP Device ID
          PCI\VEN_1002&DEV_4752&SUBSYS_001E0E11&REV_2
7\4&12365AD0&0&1818
Adapter Type        ATI RAGE XL PCI (B41), ATI
Technologies Inc. compatible
Adapter Description RAGE XL PCI Family (Microsoft
Corporation)
Adapter RAM         8.00 MB (8,388,608 bytes)
Installed Drivers   ati2drad.dll
Driver Version      5.10.3663.6013
INF File  atiixpad.inf (ati2mpad section)
Color Planes        1
Color Table Entries 4294967296
Resolution          1024 x 768 x 60 hertz
Bits/Pixel          32
Memory Address      0xF6000000-0xF6FFFFFF
I/O Port  0x00004400-0x000044FF
Memory Address      0xF5FF0000-0xF5FF0FFF
I/O Port  0x000003B0-0x000003BB
I/O Port  0x000003C0-0x000003DF
Memory Address      0xA0000-0xBFFFF
Driver    c:\windows\system32\drivers\ati2mpad.sys
(5.10.3663.6013, 335.38 KB (343,424 bytes), 4/5/2005
5:52 AM)

[Infrared]

Item      Value

[Input]

[Keyboard]

Item      Value
Description         Standard 101/102-Key or Microsoft
Natural PS/2 Keyboard
Name      Enhanced (101- or 102-key)
Layout    00000409
PNP Device ID       ACPI\PNP0303\4&1C7DEDE8&0
Number of Function Keys       12
I/O Port  0x00000060-0x00000060
I/O Port  0x00000064-0x00000064
IRQ Channel         IRQ 1
Driver    c:\windows\system32\drivers\i8042prt.sys
(5.2.3790.1830 (srv03_sp1_rtm.050324-1447), 54.50 KB
(55,808 bytes), 3/25/2003 6:00 AM)

[Pointing Device]

Item      Value
Hardware Type       PS/2 Compatible Mouse
Number of Buttons   5
Status    OK
PNP Device ID       ACPI\PNP0F13\4&1C7DEDE8&0
Power Management Supported    No
Double Click Threshold        6
Handedness          Right Handed Operation
IRQ Channel         IRQ 12
Driver    c:\windows\system32\drivers\i8042prt.sys
(5.2.3790.1830 (srv03_sp1_rtm.050324-1447), 54.50 KB
(55,808 bytes), 3/25/2003 6:00 AM)

[Modem]

Item      Value

[Network]

[Adapter]

Item      Value
Name      [00000001] RAS Async Adapter
Adapter Type        Not Available
Product Type        RAS Async Adapter
Installed Yes
PNP Device ID       Not Available
```


© 2005 Hewlett-Packard Company. All rights reserved.

```
Last Reset          4/14/2005 4:02 PM
Index     1
Service Name        AsyncMac
IP Address          Not Available
IP Subnet Not Available
Default IP Gateway  Not Available
DHCP Enabled        No
DHCP Server         Not Available
DHCP Lease Expires  Not Available
DHCP Lease Obtained Not Available
MAC Address         Not Available

Name      [00000002] WAN Miniport (L2TP)
Adapter Type        Not Available
Product Type        WAN Miniport (L2TP)
Installed Yes
PNP Device ID       ROOT\MS_L2TPMINIPORT\0000
Last Reset          4/14/2005 4:02 PM
Index     2
Service Name        Rasl2tp
IP Address          Not Available
IP Subnet Not Available
Default IP Gateway  Not Available
DHCP Enabled        No
DHCP Server         Not Available
DHCP Lease Expires  Not Available
DHCP Lease Obtained Not Available
MAC Address         Not Available
Driver    c:\windows\system32\drivers\rasl2tp.sys
(5.2.3790.1830 (srv03_sp1_rtm.050324-1447), 66.00 KB
(67,584 bytes), 3/25/2003 6:00 AM)

Name      [00000003] WAN Miniport (PPTP)
Adapter Type        Wide Area Network (WAN)
Product Type        WAN Miniport (PPTP)
Installed Yes
PNP Device ID       ROOT\MS_PPTPMINIPORT\0000
Last Reset          4/14/2005 4:02 PM
Index     3
Service Name        PptpMiniport
IP Address          Not Available
IP Subnet Not Available
Default IP Gateway  Not Available
DHCP Enabled        No
DHCP Server         Not Available
DHCP Lease Expires  Not Available
DHCP Lease Obtained Not Available
MAC Address         50:50:54:50:30:30
Driver    c:\windows\system32\drivers\raspptp.sys
(5.2.3790.1830 (srv03_sp1_rtm.050324-1447), 61.00 KB
(62,464 bytes), 3/25/2003 6:00 AM)

Name      [00000004] WAN Miniport (PPPOE)
Adapter Type        Wide Area Network (WAN)
Product Type        WAN Miniport (PPPOE)
Installed Yes
PNP Device ID       ROOT\MS_PPPOEMINIPORT\0000
Last Reset          4/14/2005 4:02 PM
Index     4
Service Name        RasPppoe
IP Address          Not Available
IP Subnet Not Available
Default IP Gateway  Not Available
DHCP Enabled        No
DHCP Server         Not Available
DHCP Lease Expires  Not Available
DHCP Lease Obtained Not Available
MAC Address         33:50:6F:45:30:30
Driver    c:\windows\system32\drivers\raspppoe.sys
(5.2.3790.1830 (srv03_sp1_rtm.050324-1447), 40.00 KB
(40,960 bytes), 3/25/2003 6:00 AM)

Name      [00000005] Direct Parallel
Adapter Type        Not Available
Product Type        Direct Parallel
Installed Yes
PNP Device ID       ROOT\MS_PTIMINIPORT\0000
Last Reset          4/14/2005 4:02 PM
Index     5
Service Name        Raspti
IP Address          Not Available
IP Subnet Not Available
Default IP Gateway  Not Available
DHCP Enabled        No
DHCP Server         Not Available
DHCP Lease Expires  Not Available
DHCP Lease Obtained Not Available
MAC Address         Not Available
Driver    c:\windows\system32\drivers\raspti.sys
(5.2.3790.1830 (srv03_sp1_rtm.050324-1447), 19.50 KB
(19,968 bytes), 3/25/2003 6:00 AM)

Name      [00000006] WAN Miniport (IP)
Adapter Type        Not Available
Product Type        WAN Miniport (IP)
Installed Yes
PNP Device ID       ROOT\MS_NDISWANIP\0000
Last Reset          4/14/2005 4:02 PM
Index     6
Service Name        NdisWan
IP Address          Not Available
IP Subnet Not Available
Default IP Gateway  Not Available
DHCP Enabled        No
DHCP Server         Not Available
DHCP Lease Expires  Not Available
DHCP Lease Obtained Not Available
MAC Address         Not Available
Driver    c:\windows\system32\drivers\ndiswan.sys
(5.2.3790.1830 (srv03_sp1_rtm.050324-1447), 91.00 KB
(93,184 bytes), 3/25/2003 6:00 AM)

Name      [00000007] HP NC7782 Gigabit Server Adapter

Adapter Type        Ethernet 802.3
Product Type        HP NC7782 Gigabit Server Adapter

Installed Yes
PNP Device ID
          PCI\VEN_14E4&DEV_1648&SUBSYS_00D00E11&REV_1
0\4&82820FC&0&3038
Last Reset          4/14/2005 4:02 PM
Index     7
Service Name        q57w2k
IP Address          130.168.208.14
IP Subnet 255.255.0.0
Default IP Gateway  Not Available
DHCP Enabled        No
DHCP Server         Not Available
DHCP Lease Expires  Not Available
DHCP Lease Obtained Not Available
MAC Address         00:0E:7F:B0:AB:FB
Memory Address      0xF77B0000-0xF77BFFFF
IRQ Channel         IRQ 25
Driver    c:\windows\system32\drivers\q57xp32.sys
(7.35.0.0 built by: WinDDK, 110.50 KB (113,152
bytes), 4/5/2005 11:16 AM)

Name      [00000008] HP NC7782 Gigabit Server Adapter

Adapter Type        Ethernet 802.3
Product Type        HP NC7782 Gigabit Server Adapter

Installed Yes
PNP Device ID
          PCI\VEN_14E4&DEV_1648&SUBSYS_00D00E11&REV_1
0\4&82820FC&0&3138
Last Reset          4/14/2005 4:02 PM
Index     8
Service Name        q57w2k
IP Address          130.169.208.14
IP Subnet 255.255.0.0
Default IP Gateway  Not Available
DHCP Enabled        No
DHCP Server         Not Available
DHCP Lease Expires  Not Available
DHCP Lease Obtained Not Available
MAC Address         00:0E:7F:B0:AB:FA
Memory Address      0xF77A0000-0xF77AFFFF
IRQ Channel         IRQ 24
Driver    c:\windows\system32\drivers\q57xp32.sys
(7.35.0.0 built by: WinDDK, 110.50 KB (113,152
bytes), 4/5/2005 11:16 AM)

[Protocol]

Item      Value
Name      MSAFD Tcpip [TCP/IP]
Connectionless Service        No
Guarantees Delivery Yes
Guarantees Sequencing         Yes
Maximum Address Size          16 bytes
Maximum Message Size          0 bytes
Message Oriented    No
Minimum Address Size          16 bytes
Pseudo Stream Oriented        No
Supports Broadcasting         No
Supports Connect Data         No
Supports Disconnect Data      No
Supports Encryption No
Supports Expedited Data       Yes
Supports Graceful Closing     Yes
Supports Guaranteed Bandwidth No
Supports Multicasting         No

Name      MSAFD Tcpip [UDP/IP]
Connectionless Service        Yes
Guarantees Delivery No
Guarantees Sequencing         No
```


© 2005 Hewlett-Packard Company. All rights reserved.

```
Maximum Address Size          16 bytes
Maximum Message Size          63.93 KB (65,467 bytes)

Message Oriented    Yes
Minimum Address Size          16 bytes
Pseudo Stream Oriented        No
Supports Broadcasting         Yes
Supports Connect Data         No
Supports Disconnect Data      No
Supports Encryption No
Supports Expedited Data       No
Supports Graceful Closing     No
Supports Guaranteed Bandwidth No
Supports Multicasting         Yes

Name      RSVP UDP Service Provider
Connectionless Service        Yes
Guarantees Delivery No
Guarantees Sequencing         No
Maximum Address Size          16 bytes
Maximum Message Size          63.93 KB (65,467 bytes)

Message Oriented    Yes
Minimum Address Size          16 bytes
Pseudo Stream Oriented        No
Supports Broadcasting         Yes
Supports Connect Data         No
Supports Disconnect Data      No
Supports Encryption Yes
Supports Expedited Data       No
Supports Graceful Closing     No
Supports Guaranteed Bandwidth No
Supports Multicasting         Yes

Name      RSVP TCP Service Provider
Connectionless Service        No
Guarantees Delivery Yes
Guarantees Sequencing         Yes
Maximum Address Size          16 bytes
Maximum Message Size          0 bytes
Message Oriented    No
Minimum Address Size          16 bytes
Pseudo Stream Oriented        No
Supports Broadcasting         No
Supports Connect Data         No
Supports Disconnect Data      No
Supports Encryption Yes
Supports Expedited Data       Yes
Supports Graceful Closing     Yes
Supports Guaranteed Bandwidth No
Supports Multicasting         No

Name      MSAFD NetBIOS
[\Device\NetBT_Tcpip_{6609C6A0-9A9D-4197-8D64-
06BA91F53394}] SEQPACKET 3
Connectionless Service        No
Guarantees Delivery Yes
Guarantees Sequencing         Yes
Maximum Address Size          20 bytes
Maximum Message Size          62.50 KB (64,000 bytes)

Message Oriented    Yes
Minimum Address Size          20 bytes
Pseudo Stream Oriented        No
Supports Broadcasting         No
Supports Connect Data         No
Supports Disconnect Data      No
Supports Encryption No
Supports Expedited Data       No
Supports Graceful Closing     No
Supports Guaranteed Bandwidth No
Supports Multicasting         No

Name      MSAFD NetBIOS
[\Device\NetBT_Tcpip_{6609C6A0-9A9D-4197-8D64-
06BA91F53394}] DATAGRAM 3
Connectionless Service        Yes
Guarantees Delivery No
Guarantees Sequencing         No
Maximum Address Size          20 bytes
Maximum Message Size          62.50 KB (64,000 bytes)

Message Oriented    Yes
Minimum Address Size          20 bytes
Pseudo Stream Oriented        No
Supports Broadcasting         Yes
Supports Connect Data         No
Supports Disconnect Data      No
Supports Encryption No
Supports Expedited Data       No
Supports Graceful Closing     No
Supports Guaranteed Bandwidth No
Supports Multicasting         No

Name      MSAFD NetBIOS
[\Device\NetBT_Tcpip_{C4F53113-638B-482F-8ABE-
6EDECEF09DA2}] SEQPACKET 0
Connectionless Service        No
Guarantees Delivery Yes
Guarantees Sequencing         Yes
Maximum Address Size          20 bytes
Maximum Message Size          62.50 KB (64,000 bytes)

Message Oriented    Yes
Minimum Address Size          20 bytes
Pseudo Stream Oriented        No
Supports Broadcasting         No
Supports Connect Data         No
Supports Disconnect Data      No
Supports Encryption No
Supports Expedited Data       No
Supports Graceful Closing     No
Supports Guaranteed Bandwidth No
Supports Multicasting         No

Name      MSAFD NetBIOS
[\Device\NetBT_Tcpip_{C4F53113-638B-482F-8ABE-
6EDECEF09DA2}] DATAGRAM 0
Connectionless Service        Yes
Guarantees Delivery No
Guarantees Sequencing         No
Maximum Address Size          20 bytes
Maximum Message Size          62.50 KB (64,000 bytes)

Message Oriented    Yes
Minimum Address Size          20 bytes
Pseudo Stream Oriented        No
Supports Broadcasting         Yes
Supports Connect Data         No
Supports Disconnect Data      No
Supports Encryption No
Supports Expedited Data       No
Supports Graceful Closing     No
Supports Guaranteed Bandwidth No
Supports Multicasting         No

Name      MSAFD NetBIOS
[\Device\NetBT_Tcpip_{53AAF7C9-8240-43BD-933F-
AD852A2D5ECD}] SEQPACKET 1
Connectionless Service        No
Guarantees Delivery Yes
Guarantees Sequencing         Yes
Maximum Address Size          20 bytes
Maximum Message Size          62.50 KB (64,000 bytes)

Message Oriented    Yes
Minimum Address Size          20 bytes
Pseudo Stream Oriented        No
Supports Broadcasting         No
Supports Connect Data         No
Supports Disconnect Data      No
Supports Encryption No
Supports Expedited Data       No
Supports Graceful Closing     No
Supports Guaranteed Bandwidth No
Supports Multicasting         No

Name      MSAFD NetBIOS
[\Device\NetBT_Tcpip_{53AAF7C9-8240-43BD-933F-
AD852A2D5ECD}] DATAGRAM 1
Connectionless Service        Yes
Guarantees Delivery No
Guarantees Sequencing         No
Maximum Address Size          20 bytes
Maximum Message Size          62.50 KB (64,000 bytes)

Message Oriented    Yes
Minimum Address Size          20 bytes
Pseudo Stream Oriented        No
Supports Broadcasting         Yes
Supports Connect Data         No
Supports Disconnect Data      No
Supports Encryption No
Supports Expedited Data       No
Supports Graceful Closing     No
Supports Guaranteed Bandwidth No
Supports Multicasting         No

Name      MSAFD NetBIOS
[\Device\NetBT_Tcpip_{67CBA5B9-D976-48B8-8C7A-
899341B0DE95}] SEQPACKET 2
Connectionless Service        No
Guarantees Delivery Yes
Guarantees Sequencing         Yes
Maximum Address Size          20 bytes
Maximum Message Size          62.50 KB (64,000 bytes)

Message Oriented    Yes
Minimum Address Size          20 bytes
```


© 2005 Hewlett-Packard Company. All rights reserved.

```
Pseudo Stream Oriented        No
Supports Broadcasting         No
Supports Connect Data         No
Supports Disconnect Data      No
Supports Encryption No
Supports Expedited Data       No
Supports Graceful Closing     No
Supports Guaranteed Bandwidth No
Supports Multicasting         No

Name      MSAFD NetBIOS
[\Device\NetBT_Tcpip_{67CBA5B9-D976-48B8-8C7A-
899341B0DE95}] DATAGRAM 2
Connectionless Service        Yes
Guarantees Delivery No
Guarantees Sequencing         No
Maximum Address Size          20 bytes
Maximum Message Size          62.50 KB (64,000 bytes)

Message Oriented    Yes
Minimum Address Size          20 bytes
Pseudo Stream Oriented        No
Supports Broadcasting         Yes
Supports Connect Data         No
Supports Disconnect Data      No
Supports Encryption No
Supports Expedited Data       No
Supports Graceful Closing     No
Supports Guaranteed Bandwidth No
Supports Multicasting         No

[WinSock]

Item      Value
File      c:\windows\system32\winsock.dll
Size      2.80 KB (2,864 bytes)
Version   3.10

File      c:\windows\system32\wsock32.dll
Size      22.00 KB (22,528 bytes)
Version   5.2.3790.0 (srv03_rtm.030324-2048)

[Ports]



[Serial]

Item      Value
Name      Communications Port (COM1)
Status    OK
PNP Device ID       ACPI\PNP0501\0
Maximum Input Buffer Size     0
Maximum Output Buffer Size    No
Settable Baud Rate  Yes
Settable Data Bits  Yes
Settable Flow Control         Yes
Settable Parity     Yes
Settable Parity Check         Yes
Settable Stop Bits  Yes
Settable RLSD       Yes
Supports RLSD       Yes
Supports 16 Bit Mode          No
Supports Special Characters   No
Baud Rate 9600
Bits/Byte 8
Stop Bits 1
Parity    None
Busy      No
Abort Read/Write on Error     No
Binary Mode Enabled Yes
Continue XMit on XOff         No
CTS Outflow Control No
Discard NULL Bytes  No
DSR Outflow Control 0
DSR Sensitivity     0
DTR Flow Control Type         Enable
EOF Character       0
Error Replace Character       0
Error Replacement Enabled     No
Event Character     0
Parity Check Enabled          No
RTS Flow Control Type         Enable
XOff Character      19
XOffXMit Threshold  512
XOn Character       17
XOnXMit Threshold   2048
XOnXOff InFlow Control        0
XOnXOff OutFlow Control       0
IRQ Channel         IRQ 4
I/O Port  0x000003F8-0x000003FF
Driver    c:\windows\system32\drivers\serial.sys
(5.2.3790.1830 (srv03_sp1_rtm.050324-1447), 64.00 KB
(65,536 bytes), 3/25/2003 6:00 AM)

[Parallel]

Item      Value

[Storage]



[Drives]

Item      Value
Drive     A:
Description         3 1/2 Inch Floppy Drive

Drive     C:
Description         Local Fixed Disk
Compressed          No
File System         NTFS
Size      33.91 GB (36,410,552,320 bytes)
Free Space          28.80 GB (30,925,881,344 bytes)

Volume Name
Volume Serial Number          7CA24B6B

Drive     D:
Description         CD-ROM Disc

Drive     E:
Description         Local Fixed Disk
Compressed          Not Available
File System         Not Available
Size      Not Available
Free Space          Not Available
Volume Name         Not Available
Volume Serial Number          Not Available

Drive     F:
Description         Local Fixed Disk
Compressed          Not Available
File System         Not Available
Size      Not Available
Free Space          Not Available
Volume Name         Not Available
Volume Serial Number          Not Available

Drive     G:
Description         Local Fixed Disk
Compressed          Not Available
File System         Not Available
Size      Not Available
Free Space          Not Available
Volume Name         Not Available
Volume Serial Number          Not Available

Drive     H:
Description         Local Fixed Disk
Compressed          Not Available
File System         Not Available
Size      Not Available
Free Space          Not Available
Volume Name         Not Available
Volume Serial Number          Not Available

Drive     I:
Description         Local Fixed Disk
Compressed          Not Available
File System         Not Available
Size      Not Available
Free Space          Not Available
Volume Name         Not Available
Volume Serial Number          Not Available

Drive     J:
Description         Local Fixed Disk
Compressed          Not Available
File System         Not Available
Size      Not Available
Free Space          Not Available
Volume Name         Not Available
Volume Serial Number          Not Available

Drive     K:
Description         Local Fixed Disk
Compressed          Not Available
File System         Not Available
Size      Not Available
Free Space          Not Available
Volume Name         Not Available
Volume Serial Number          Not Available

Drive     L:
Description         Local Fixed Disk
Compressed          Not Available
File System         Not Available
```


© 2005 Hewlett-Packard Company. All rights reserved.

```
Size      Not Available
Free Space          Not Available
Volume Name         Not Available
Volume Serial Number          Not Available

Drive     M:
Description         Local Fixed Disk
Compressed          Not Available
File System         Not Available
Size      Not Available
Free Space          Not Available
Volume Name         Not Available
Volume Serial Number          Not Available

Drive     N:
Description         Local Fixed Disk
Compressed          Not Available
File System         Not Available
Size      Not Available
Free Space          Not Available
Volume Name         Not Available
Volume Serial Number          Not Available

Drive     O:
Description         Local Fixed Disk
Compressed          Not Available
File System         Not Available
Size      Not Available
Free Space          Not Available
Volume Name         Not Available
Volume Serial Number          Not Available

Drive     P:
Description         Local Fixed Disk
Compressed          Not Available
File System         Not Available
Size      Not Available
Free Space          Not Available
Volume Name         Not Available
Volume Serial Number          Not Available

Drive     Q:
Description         Local Fixed Disk
Compressed          Not Available
File System         Not Available
Size      Not Available
Free Space          Not Available
Volume Name         Not Available
Volume Serial Number          Not Available

Drive     R:
Description         Local Fixed Disk
Compressed          Not Available
File System         Not Available
Size      Not Available
Free Space          Not Available
Volume Name         Not Available
Volume Serial Number          Not Available

Drive     S:
Description         Local Fixed Disk
Compressed          Not Available
File System         Not Available
Size      Not Available
Free Space          Not Available
Volume Name         Not Available
Volume Serial Number          Not Available

Drive     W:
Description         Local Fixed Disk
Compressed          No
File System         NTFS
Size      436.70 GB (468,906,729,472 bytes)
Free Space          147.46 GB (158,332,497,920 bytes)

Volume Name         back1
Volume Serial Number          84D573DC

Drive     X:
Description         Local Fixed Disk
Compressed          No
File System         NTFS
Size      436.70 GB (468,906,729,472 bytes)
Free Space          147.14 GB (157,991,460,864 bytes)

Volume Name         back2
Volume Serial Number          90FE9E09

Drive     Y:
Description         Local Fixed Disk
Compressed          No
File System         NTFS
Size      436.70 GB (468,906,729,472 bytes)
Free Space          119.25 GB (128,049,061,888 bytes)

Volume Name         back3
Volume Serial Number          B0149409

Drive     Z:
Description         Local Fixed Disk
Compressed          No
File System         NTFS
Size      436.70 GB (468,906,729,472 bytes)
Free Space          147.46 GB (158,328,942,592 bytes)

Volume Name         back4
Volume Serial Number          C43717AA

[Disks]

Item      Value
Description         \\.\PHYSICALDRIVE14
Manufacturer        Not Available
Model     Not Available
Bytes/Sector        512
Media Loaded        Yes
Media Type          Fixed hard disk
Partitions          1
SCSI Bus  Not Available
SCSI Logical Unit   Not Available
SCSI Port Not Available
SCSI Target ID      Not Available
Sectors/Track       63
Size      474.85 GB (509,868,656,640 bytes)
Total Cylinders     61,988
Total Sectors       995,837,220
Total Tracks        15,806,940
Tracks/Cylinder     255
Partition Disk #14, Partition #0
Partition Size      474.85 GB (509,867,982,848 bytes)

Partition Starting Offset     65,536 bytes

Description         \\.\PHYSICALDRIVE15
Manufacturer        Not Available
Model     Not Available
Bytes/Sector        512
Media Loaded        Yes
Media Type          Fixed hard disk
Partitions          1
SCSI Bus  Not Available
SCSI Logical Unit   Not Available
SCSI Port Not Available
SCSI Target ID      Not Available
Sectors/Track       63
Size      76.17 GB (81,783,959,040 bytes)
Total Cylinders     9,943
Total Sectors       159,734,295
Total Tracks        2,535,465
Tracks/Cylinder     255
Partition Disk #15, Partition #0
Partition Size      76.17 GB (81,783,685,120 bytes)

Partition Starting Offset     65,536 bytes

Description         \\.\PHYSICALDRIVE6
Manufacturer        Not Available
Model     Not Available
Bytes/Sector        512
Media Loaded        Yes
Media Type          Fixed hard disk
Partitions          1
SCSI Bus  Not Available
SCSI Logical Unit   Not Available
SCSI Port Not Available
SCSI Target ID      Not Available
Sectors/Track       63
Size      76.17 GB (81,783,959,040 bytes)
Total Cylinders     9,943
Total Sectors       159,734,295
Total Tracks        2,535,465
Tracks/Cylinder     255
Partition Disk #6, Partition #0
Partition Size      76.17 GB (81,783,685,120 bytes)

Partition Starting Offset     65,536 bytes

Description         \\.\PHYSICALDRIVE7
Manufacturer        Not Available
Model     Not Available
Bytes/Sector        512
Media Loaded        Yes
Media Type          Fixed hard disk
Partitions          1
SCSI Bus  Not Available
SCSI Logical Unit   Not Available
SCSI Port Not Available
SCSI Target ID      Not Available
Sectors/Track       63
```


© 2005 Hewlett-Packard Company. All rights reserved.

```
Size      436.70 GB (468,906,762,240 bytes)
Total Cylinders     57,008
Total Sectors       915,833,520
Total Tracks        14,537,040
Tracks/Cylinder     255
Partition Disk #7, Partition #0
Partition Size      436.70 GB (468,906,729,984 bytes)

Partition Starting Offset     32,256 bytes

Description         \\.\PHYSICALDRIVE5
Manufacturer        Not Available
Model     Not Available
Bytes/Sector        512
Media Loaded        Yes
Media Type          Fixed hard disk
Partitions          1
SCSI Bus  Not Available
SCSI Logical Unit   Not Available
SCSI Port Not Available
SCSI Target ID      Not Available
Sectors/Track       63
Size      218.26 GB (234,354,677,760 bytes)
Total Cylinders     28,492
Total Sectors       457,723,980
Total Tracks        7,265,460
Tracks/Cylinder     255
Partition Disk #5, Partition #0
Partition Size      218.26 GB (234,353,590,272 bytes)

Partition Starting Offset     65,536 bytes

Description         \\.\PHYSICALDRIVE8
Manufacturer        Not Available
Model     Not Available
Bytes/Sector        512
Media Loaded        Yes
Media Type          Fixed hard disk
Partitions          1
SCSI Bus  Not Available
SCSI Logical Unit   Not Available
SCSI Port Not Available
SCSI Target ID      Not Available
Sectors/Track       63
Size      76.17 GB (81,783,959,040 bytes)
Total Cylinders     9,943
Total Sectors       159,734,295
Total Tracks        2,535,465
Tracks/Cylinder     255
Partition Disk #8, Partition #0
Partition Size      76.17 GB (81,783,685,120 bytes)

Partition Starting Offset     65,536 bytes

Description         \\.\PHYSICALDRIVE9
Manufacturer        Not Available
Model     Not Available
Bytes/Sector        512
Media Loaded        Yes
Media Type          Fixed hard disk
Partitions          1
SCSI Bus  Not Available
SCSI Logical Unit   Not Available
SCSI Port Not Available
SCSI Target ID      Not Available
Sectors/Track       63
Size      436.70 GB (468,906,762,240 bytes)
Total Cylinders     57,008
Total Sectors       915,833,520
Total Tracks        14,537,040
Tracks/Cylinder     255
Partition Disk #9, Partition #0
Partition Size      436.70 GB (468,906,729,984 bytes)

Partition Starting Offset     32,256 bytes

Description         \\.\PHYSICALDRIVE16
Manufacturer        Not Available
Model     Not Available
Bytes/Sector        512
Media Loaded        Yes
Media Type          Fixed hard disk
Partitions          1
SCSI Bus  Not Available
SCSI Logical Unit   Not Available
SCSI Port Not Available
SCSI Target ID      Not Available
Sectors/Track       63
Size      76.17 GB (81,783,959,040 bytes)
Total Cylinders     9,943
Total Sectors       159,734,295
Total Tracks        2,535,465
Tracks/Cylinder     255
Partition Disk #16, Partition #0
Partition Size      76.17 GB (81,783,685,120 bytes)

Partition Starting Offset     65,536 bytes

Description         \\.\PHYSICALDRIVE17
Manufacturer        Not Available
Model     Not Available
Bytes/Sector        512
Media Loaded        Yes
Media Type          Fixed hard disk
Partitions          1
SCSI Bus  Not Available
SCSI Logical Unit   Not Available
SCSI Port Not Available
SCSI Target ID      Not Available
Sectors/Track       63
Size      76.17 GB (81,783,959,040 bytes)
Total Cylinders     9,943
Total Sectors       159,734,295
Total Tracks        2,535,465
Tracks/Cylinder     255
Partition Disk #17, Partition #0
Partition Size      76.17 GB (81,783,685,120 bytes)

Partition Starting Offset     65,536 bytes

Description         \\.\PHYSICALDRIVE4
Manufacturer        Not Available
Model     Not Available
Bytes/Sector        512
Media Loaded        Yes
Media Type          Fixed hard disk
Partitions          1
SCSI Bus  Not Available
SCSI Logical Unit   Not Available
SCSI Port Not Available
SCSI Target ID      Not Available
Sectors/Track       63
Size      76.17 GB (81,783,959,040 bytes)
Total Cylinders     9,943
Total Sectors       159,734,295
Total Tracks        2,535,465
Tracks/Cylinder     255
Partition Disk #4, Partition #0
Partition Size      76.17 GB (81,783,685,120 bytes)

Partition Starting Offset     65,536 bytes

Description         \\.\PHYSICALDRIVE18
Manufacturer        Not Available
Model     Not Available
Bytes/Sector        512
Media Loaded        Yes
Media Type          Fixed hard disk
Partitions          1
SCSI Bus  Not Available
SCSI Logical Unit   Not Available
SCSI Port Not Available
SCSI Target ID      Not Available
Sectors/Track       63
Size      218.26 GB (234,354,677,760 bytes)
Total Cylinders     28,492
Total Sectors       457,723,980
Total Tracks        7,265,460
Tracks/Cylinder     255
Partition Disk #18, Partition #0
Partition Size      218.26 GB (234,353,590,272 bytes)

Partition Starting Offset     65,536 bytes

Description         \\.\PHYSICALDRIVE13
Manufacturer        Not Available
Model     Not Available
Bytes/Sector        512
Media Loaded        Yes
Media Type          Fixed hard disk
Partitions          1
SCSI Bus  Not Available
SCSI Logical Unit   Not Available
SCSI Port Not Available
SCSI Target ID      Not Available
Sectors/Track       63
Size      76.17 GB (81,783,959,040 bytes)
Total Cylinders     9,943
Total Sectors       159,734,295
Total Tracks        2,535,465
Tracks/Cylinder     255
Partition Disk #13, Partition #0
Partition Size      76.17 GB (81,783,685,120 bytes)

Partition Starting Offset     65,536 bytes

Description         \\.\PHYSICALDRIVE10
Manufacturer        Not Available
Model     Not Available
```


© 2005 Hewlett-Packard Company. All rights reserved.

```
Bytes/Sector        512
Media Loaded        Yes
Media Type          Fixed hard disk
Partitions          1
SCSI Bus  Not Available
SCSI Logical Unit   Not Available
SCSI Port Not Available
SCSI Target ID      Not Available
Sectors/Track       63
Size      76.17 GB (81,783,959,040 bytes)
Total Cylinders     9,943
Total Sectors       159,734,295
Total Tracks        2,535,465
Tracks/Cylinder     255
Partition Disk #10, Partition #0
Partition Size      76.17 GB (81,783,685,120 bytes)

Partition Starting Offset     65,536 bytes

Description         \\.\PHYSICALDRIVE0
Manufacturer        Not Available
Model     Not Available
Bytes/Sector        512
Media Loaded        Yes
Media Type          Fixed hard disk
Partitions          1
SCSI Bus  Not Available
SCSI Logical Unit   Not Available
SCSI Port Not Available
SCSI Target ID      Not Available
Sectors/Track       63
Size      76.17 GB (81,783,959,040 bytes)
Total Cylinders     9,943
Total Sectors       159,734,295
Total Tracks        2,535,465
Tracks/Cylinder     255
Partition Disk #0, Partition #0
Partition Size      76.17 GB (81,783,685,120 bytes)

Partition Starting Offset     65,536 bytes

Description         \\.\PHYSICALDRIVE1
Manufacturer        Not Available
Model     Not Available
Bytes/Sector        512
Media Loaded        Yes
Media Type          Fixed hard disk
Partitions          1
SCSI Bus  Not Available
SCSI Logical Unit   Not Available
SCSI Port Not Available
SCSI Target ID      Not Available
Sectors/Track       63
Size      436.70 GB (468,906,762,240 bytes)
Total Cylinders     57,008
Total Sectors       915,833,520
Total Tracks        14,537,040
Tracks/Cylinder     255
Partition Disk #1, Partition #0
Partition Size      436.70 GB (468,906,729,984 bytes)

Partition Starting Offset     32,256 bytes

Description         \\.\PHYSICALDRIVE2
Manufacturer        Not Available
Model     Not Available
Bytes/Sector        512
Media Loaded        Yes
Media Type          Fixed hard disk
Partitions          1
SCSI Bus  Not Available
SCSI Logical Unit   Not Available
SCSI Port Not Available
SCSI Target ID      Not Available
Sectors/Track       63
Size      76.17 GB (81,783,959,040 bytes)
Total Cylinders     9,943
Total Sectors       159,734,295
Total Tracks        2,535,465
Tracks/Cylinder     255
Partition Disk #2, Partition #0
Partition Size      76.17 GB (81,783,685,120 bytes)

Partition Starting Offset     65,536 bytes

Description         \\.\PHYSICALDRIVE3
Manufacturer        Not Available
Model     Not Available
Bytes/Sector        512
Media Loaded        Yes
Media Type          Fixed hard disk
Partitions          1
SCSI Bus  Not Available
SCSI Logical Unit   Not Available
SCSI Port Not Available
SCSI Target ID      Not Available
Sectors/Track       63
Size      436.70 GB (468,906,762,240 bytes)
Total Cylinders     57,008
Total Sectors       915,833,520
Total Tracks        14,537,040
Tracks/Cylinder     255
Partition Disk #3, Partition #0
Partition Size      436.70 GB (468,906,729,984 bytes)

Partition Starting Offset     32,256 bytes

Description         \\.\PHYSICALDRIVE11
Manufacturer        Not Available
Model     Not Available
Bytes/Sector        512
Media Loaded        Yes
Media Type          Fixed hard disk
Partitions          1
SCSI Bus  Not Available
SCSI Logical Unit   Not Available
SCSI Port Not Available
SCSI Target ID      Not Available
Sectors/Track       63
Size      76.17 GB (81,783,959,040 bytes)
Total Cylinders     9,943
Total Sectors       159,734,295
Total Tracks        2,535,465
Tracks/Cylinder     255
Partition Disk #11, Partition #0
Partition Size      76.17 GB (81,783,685,120 bytes)

Partition Starting Offset     65,536 bytes

Description         \\.\PHYSICALDRIVE12
Manufacturer        Not Available
Model     Not Available
Bytes/Sector        512
Media Loaded        Yes
Media Type          Fixed hard disk
Partitions          1
SCSI Bus  Not Available
SCSI Logical Unit   Not Available
SCSI Port Not Available
SCSI Target ID      Not Available
Sectors/Track       63
Size      76.17 GB (81,783,959,040 bytes)
Total Cylinders     9,943
Total Sectors       159,734,295
Total Tracks        2,535,465
Tracks/Cylinder     255
Partition Disk #12, Partition #0
Partition Size      76.17 GB (81,783,685,120 bytes)

Partition Starting Offset     65,536 bytes

Description         Disk drive
Manufacturer        (Standard disk drives)
Model     COMPAQ LOGICAL VOLUME SCSI Disk Device
Bytes/Sector        512
Media Loaded        Yes
Media Type          Fixed hard disk
Partitions          1
SCSI Bus  0
SCSI Logical Unit   0
SCSI Port 2
SCSI Target ID      4
Sectors/Track       32
Size      33.91 GB (36,414,750,720 bytes)
Total Cylinders     8,716
Total Sectors       71,122,560
Total Tracks        2,222,580
Tracks/Cylinder     255
Partition Disk #19, Partition #0
Partition Size      33.91 GB (36,410,556,416 bytes)

Partition Starting Offset     16,384 bytes

[SCSI]

Item      Value
Name      Compaq Smart Array 5i Controller
Manufacturer        Compaq
Status    OK
PNP Device ID
          PCI\VEN_0E11&DEV_B178&SUBSYS_40800E11&REV_0
1\4&82820FC&0&2038
Memory Address      0xF77C0000-0xF77FFFFF
I/O Port  0x00005000-0x00005FFF
Memory Address      0xF5EF0000-0xF5EF3FFF
IRQ Channel         IRQ 18
```


© 2005 Hewlett-Packard Company. All rights reserved.

```
Driver    c:\windows\system32\drivers\cpqcissm.sys
(5.48.0.32 Build 3 (NT.041001-1408), 18.00 KB (18,432
bytes), 3/25/2003 6:00 AM)

Name      Smart Array 6400 Controller (Non-Miniport)

Manufacturer        Hewlett-Packard
Status    OK
PNP Device ID
          PCI\VEN_0E11&DEV_0046&SUBSYS_409C0E11&REV_0
1\5&2C344C1F&0&203840
Memory Address      0xF78F0000-0xF78F1FFF
I/O Port  0x00006000-0x00007FFF
IRQ Channel         IRQ 28
Driver    c:\windows\system32\drivers\hpqcissb.sys
(5.16.2.32 built by: (RobertVC), 39.00 KB (39,936
bytes), 4/5/2005 11:47 AM)

Name      Smart Array 6400 Controller U320 Expansion
Module (Non-Miniport)
Manufacturer        Hewlett-Packard
Status    OK
PNP Device ID
          PCI\VEN_0E11&DEV_0046&SUBSYS_409D0E11&REV_0
1\5&2C344C1F&0&283840
Memory Address      0xF7870000-0xF7871FFF
I/O Port  0x00006400-0x000064FF
IRQ Channel         IRQ 29
Driver    c:\windows\system32\drivers\hpqcissb.sys
(5.16.2.32 built by: (RobertVC), 39.00 KB (39,936
bytes), 4/5/2005 11:47 AM)

Name      Smart Array 6400 Controller (Non-Miniport)

Manufacturer        Hewlett-Packard
Status    OK
PNP Device ID
          PCI\VEN_0E11&DEV_0046&SUBSYS_409C0E11&REV_0
1\5&2363B0A8&0&204040
Memory Address      0xF79F0000-0xF79F1FFF
I/O Port  0x00007000-0x00007FFF
IRQ Channel         IRQ 30
Driver    c:\windows\system32\drivers\hpqcissb.sys
(5.16.2.32 built by: (RobertVC), 39.00 KB (39,936
bytes), 4/5/2005 11:47 AM)

Name      Smart Array 6400 Controller U320 Expansion
Module (Non-Miniport)
Manufacturer        Hewlett-Packard
Status    OK
PNP Device ID
          PCI\VEN_0E11&DEV_0046&SUBSYS_409D0E11&REV_0
1\5&2363B0A8&0&284040
Memory Address      0xF7970000-0xF7971FFF
I/O Port  0x00007400-0x000074FF
IRQ Channel         IRQ 31
Driver    c:\windows\system32\drivers\hpqcissb.sys
(5.16.2.32 built by: (RobertVC), 39.00 KB (39,936
bytes), 4/5/2005 11:47 AM)

Name      Smart Array 6400 Controller (Non-Miniport)

Manufacturer        Hewlett-Packard
Status    OK
PNP Device ID
          PCI\VEN_0E11&DEV_0046&SUBSYS_409C0E11&REV_0
1\5&56DD264&0&206848
Memory Address      0xF7AF0000-0xF7AF1FFF
I/O Port  0x00008000-0x0000DFFF
IRQ Channel         IRQ 32
Driver    c:\windows\system32\drivers\hpqcissb.sys
(5.16.2.32 built by: (RobertVC), 39.00 KB (39,936
bytes), 4/5/2005 11:47 AM)

Name      Smart Array 6400 Controller U320 Expansion
Module (Non-Miniport)
Manufacturer        Hewlett-Packard
Status    OK
PNP Device ID
          PCI\VEN_0E11&DEV_0046&SUBSYS_409D0E11&REV_0
1\5&56DD264&0&286848
Memory Address      0xF7A70000-0xF7A71FFF
I/O Port  0x00008400-0x000084FF
IRQ Channel         IRQ 33
Driver    c:\windows\system32\drivers\hpqcissb.sys
(5.16.2.32 built by: (RobertVC), 39.00 KB (39,936
bytes), 4/5/2005 11:47 AM)

Name      Smart Array 6400 Controller (Non-Miniport)

Manufacturer        Hewlett-Packard
Status    OK
PNP Device ID
          PCI\VEN_0E11&DEV_0046&SUBSYS_409C0E11&REV_0
1\5&25998046&0&207050
Memory Address      0xF7BF0000-0xF7BF1FFF
I/O Port  0x00009000-0x00009FFF
IRQ Channel         IRQ 36
Driver    c:\windows\system32\drivers\hpqcissb.sys
(5.16.2.32 built by: (RobertVC), 39.00 KB (39,936
bytes), 4/5/2005 11:47 AM)

Name      Smart Array 6400 Controller U320 Expansion
Module (Non-Miniport)
Manufacturer        Hewlett-Packard
Status    OK
PNP Device ID
          PCI\VEN_0E11&DEV_0046&SUBSYS_409D0E11&REV_0
1\5&25998046&0&287050
Memory Address      0xF7B70000-0xF7B71FFF
I/O Port  0x00009400-0x000094FF
IRQ Channel         IRQ 37
Driver    c:\windows\system32\drivers\hpqcissb.sys
(5.16.2.32 built by: (RobertVC), 39.00 KB (39,936
bytes), 4/5/2005 11:47 AM)

Name      Smart Array 6400 Controller (Non-Miniport)

Manufacturer        Hewlett-Packard
Status    OK
PNP Device ID
          PCI\VEN_0E11&DEV_0046&SUBSYS_409C0E11&REV_0
1\5&1B3A307E&0&204858
Memory Address      0xF7DF0000-0xF7DF1FFF
I/O Port  0x0000B000-0x0000BFFF
IRQ Channel         IRQ 40
Driver    c:\windows\system32\drivers\hpqcissb.sys
(5.16.2.32 built by: (RobertVC), 39.00 KB (39,936
bytes), 4/5/2005 11:47 AM)

Name      Smart Array 6400 Controller U320 Expansion
Module (Non-Miniport)
Manufacturer        Hewlett-Packard
Status    OK
PNP Device ID
          PCI\VEN_0E11&DEV_0046&SUBSYS_409D0E11&REV_0
1\5&1B3A307E&0&284858
Memory Address      0xF7D70000-0xF7D71FFF
I/O Port  0x0000B400-0x0000B4FF
IRQ Channel         IRQ 41
Driver    c:\windows\system32\drivers\hpqcissb.sys
(5.16.2.32 built by: (RobertVC), 39.00 KB (39,936
bytes), 4/5/2005 11:47 AM)

Name      Smart Array 642 Controller (Non-Miniport)

Manufacturer        Hewlett-Packard
Status    OK
PNP Device ID
          PCI\VEN_0E11&DEV_0046&SUBSYS_409B0E11&REV_0
1\4&2534A57B&0&5058
Memory Address      0xF7CF0000-0xF7CF1FFF
I/O Port  0x0000A000-0x0000BFFF
Memory Address      0xF7C80000-0xF7CBFFFF
IRQ Channel         IRQ 42
Driver    c:\windows\system32\drivers\hpqcissb.sys
(5.16.2.32 built by: (RobertVC), 39.00 KB (39,936
bytes), 4/5/2005 11:47 AM)

Name      Smart Array 6400 Controller (Non-Miniport)

Manufacturer        Hewlett-Packard
Status    OK
PNP Device ID
          PCI\VEN_0E11&DEV_0046&SUBSYS_409C0E11&REV_0
1\5&30FCE3FC&0&205860
Memory Address      0xF7EF0000-0xF7EF1FFF
I/O Port  0x0000C000-0x0000DFFF
IRQ Channel         IRQ 44
Driver    c:\windows\system32\drivers\hpqcissb.sys
(5.16.2.32 built by: (RobertVC), 39.00 KB (39,936
bytes), 4/5/2005 11:47 AM)

Name      Smart Array 6400 Controller U320 Expansion
Module (Non-Miniport)
Manufacturer        Hewlett-Packard
Status    OK
PNP Device ID
          PCI\VEN_0E11&DEV_0046&SUBSYS_409D0E11&REV_0
1\5&30FCE3FC&0&285860
Memory Address      0xF7E70000-0xF7E71FFF
I/O Port  0x0000C400-0x0000C4FF
IRQ Channel         IRQ 45
Driver    c:\windows\system32\drivers\hpqcissb.sys
(5.16.2.32 built by: (RobertVC), 39.00 KB (39,936
bytes), 4/5/2005 11:47 AM)

Name      Smart Array 6400 Controller (Non-Miniport)
```


© 2005 Hewlett-Packard Company. All rights reserved.

```
Manufacturer        Hewlett-Packard
Status    OK
PNP Device ID
          PCI\VEN_0E11&DEV_0046&SUBSYS_409C0E11&REV_0
1\5&282C4885&0&206060
Memory Address      0xF7FF0000-0xF7FF1FFF
I/O Port  0x0000D000-0x0000DFFF
IRQ Channel         IRQ 46
Driver    c:\windows\system32\drivers\hpqcissb.sys
(5.16.2.32 built by: (RobertVC), 39.00 KB (39,936
bytes), 4/5/2005 11:47 AM)

Name      Smart Array 6400 Controller U320 Expansion
Module (Non-Miniport)
Manufacturer        Hewlett-Packard
Status    OK
PNP Device ID
          PCI\VEN_0E11&DEV_0046&SUBSYS_409D0E11&REV_0
1\5&282C4885&0&286060
Memory Address      0xF7F70000-0xF7F71FFF
I/O Port  0x0000D400-0x0000D4FF
IRQ Channel         IRQ 47
Driver    c:\windows\system32\drivers\hpqcissb.sys
(5.16.2.32 built by: (RobertVC), 39.00 KB (39,936
bytes), 4/5/2005 11:47 AM)

[IDE]

Item      Value
Name      Standard Dual Channel PCI IDE Controller

Manufacturer        (Standard IDE ATA/ATAPI
controllers)
Status    OK
PNP Device ID
          PCI\VEN_1022&DEV_7469&SUBSYS_32040E11&REV_0
3\3&20FEA912&0&21
I/O Port  0x00002000-0x0000200F
Driver    c:\windows\system32\drivers\pciide.sys
(5.2.3790.0 (srv03_rtm.030324-2048), 5.50 KB (5,632
bytes), 3/25/2003 6:00 AM)

Name      Primary IDE Channel
Manufacturer        (Standard IDE ATA/ATAPI
controllers)
Status    OK
PNP Device ID       PCIIDE\IDECHANNEL\4&21637DBD&0&0

I/O Port  0x000001F0-0x000001F7
I/O Port  0x000003F6-0x000003F6
IRQ Channel         IRQ 14
Driver    c:\windows\system32\drivers\atapi.sys
(5.2.3790.1830 (srv03_sp1_rtm.050324-1447), 93.50 KB
(95,744 bytes), 3/25/2003 6:00 AM)

Name      Secondary IDE Channel
Manufacturer        (Standard IDE ATA/ATAPI
controllers)
Status    OK
PNP Device ID       PCIIDE\IDECHANNEL\4&21637DBD&0&1

I/O Port  0x00000170-0x00000177
I/O Port  0x00000376-0x00000376
Driver    c:\windows\system32\drivers\atapi.sys
(5.2.3790.1830 (srv03_sp1_rtm.050324-1447), 93.50 KB
(95,744 bytes), 3/25/2003 6:00 AM)

[Printing]

Name      Driver    Port Name Server Name

[Problem Devices]

Device    PNP Device ID       Error Code
Base System Device
          PCI\VEN_0E11&DEV_B203&SUBSYS_B2060E11&REV_0
1\4&12365AD0&0&1018 The drivers for this device are
not installed.
Base System Device
          PCI\VEN_0E11&DEV_B204&SUBSYS_B2060E11&REV_0
1\4&12365AD0&0&1218 The drivers for this device are
not installed.

[USB]

Device    PNP Device ID
Standard OpenHCD USB Host Controller
          PCI\VEN_1022&DEV_7464&SUBSYS_32020E11&REV_0
B\4&12365AD0&0&0018
Standard OpenHCD USB Host Controller
          PCI\VEN_1022&DEV_7464&SUBSYS_32020E11&REV_0
B\4&12365AD0&0&0118

[Software Environment]



[System Drivers]

Name      Description         File      Type
          Started   Start Mode          State
          Status    Error Control       Accept Pause
          Accept Stop
abiosdsk  Abiosdsk  Not Available       Kernel Driver
          No        Disabled  Stopped   OK
          Ignore    No        No
acpi      Microsoft ACPI Driver
          c:\windows\system32\drivers\acpi.sys
          Kernel Driver       Yes       Boot
          Running   OK        Normal    No        Yes

acpiec    ACPIEC
          c:\windows\system32\drivers\acpiec.sys
          Kernel Driver       No        Disabled
          Stopped   OK        Normal    No        No

adpu160m  adpu160m  Not Available       Kernel Driver
          No        Disabled  Stopped   OK
          Normal    No        No
adpu320   adpu320   Not Available       Kernel Driver
          No        Disabled  Stopped   OK
          Normal    No        No
afcnt     afcnt     Not Available       Kernel Driver
          No        Disabled  Stopped   OK
          Normal    No        No

afd       AFD Networking Support Environment
          c:\windows\system32\drivers\afd.sys
          Kernel Driver       Yes       System
          Running   OK        Normal    No        Yes

aha154x   Aha154x   Not Available       Kernel Driver
          No        Disabled  Stopped   OK
          Normal    No        No
aic78u2   aic78u2   Not Available       Kernel Driver
          No        Disabled  Stopped   OK
          Normal    No        No
aic78xx   aic78xx   Not Available       Kernel Driver
          No        Disabled  Stopped   OK
          Normal    No        No
aliide    AliIde    Not Available       Kernel Driver
          No        Disabled  Stopped   OK
          Normal    No        No
asyncmac  RAS Asynchronous Media Driver
          c:\windows\system32\drivers\asyncmac.sys
          Kernel Driver       No        Manual
          Stopped   OK        Normal    No        No

atapi     Standard IDE/ESDI Hard Disk Controller
          c:\windows\system32\drivers\atapi.sys
          Kernel Driver       Yes       Boot
          Running   OK        Normal    No        Yes

atdisk    Atdisk    Not Available       Kernel Driver
          No        Disabled  Stopped   OK
          Ignore    No        No
ati2mpad  ati2mpad
          c:\windows\system32\drivers\ati2mpad.sys
          Kernel Driver       Yes       Manual
          Running   OK        Ignore    No        Yes

atmarpc   ATM ARP Client Protocol
          c:\windows\system32\drivers\atmarpc.sys
          Kernel Driver       No        Manual
          Stopped   OK        Normal    No        No

audstub   Audio Stub Driver
          c:\windows\system32\drivers\audstub.sys
          Kernel Driver       Yes       Manual
          Running   OK        Normal    No        Yes

beep      Beep
          c:\windows\system32\drivers\beep.sys
          Kernel Driver       Yes       System
          Running   OK        Normal    No        Yes

cbidf2k   cbidf2k
          c:\windows\system32\drivers\cbidf2k.sys
          Kernel Driver       No        Disabled
          Stopped   OK        Normal    No        No

cd20xrnt  cd20xrnt  Not Available       Kernel Driver
          No        Disabled  Stopped   OK
          Normal    No        No
cdfs      Cdfs
          c:\windows\system32\drivers\cdfs.sys
          File System Driver  Yes       Disabled
          Running   OK        Normal    No        Yes
```


© 2005 Hewlett-Packard Company. All rights reserved.

```
cdrom      CD-ROM Driver
           c:\windows\system32\drivers\cdrom.sys
           Kernel Driver       Yes       System
           Running   OK        Normal    No        Yes

changer    Changer   Not Available       Kernel Driver
           No        System    Stopped   OK
           Ignore    No        No
clusdisk   Cluster Disk Driver
           c:\windows\system32\drivers\clusdisk.sys
           Kernel Driver       No        Disabled
           Stopped   OK        Normal    No        No

cmdide     CmdIde    Not Available       Kernel Driver
           No        Disabled  Stopped   OK
           Normal    No        No
cpqarray   Cpqarray  Not Available       Kernel Driver
           No        Disabled  Stopped   OK
           Normal    No        No
cpqarry2   cpqarry2  Not Available       Kernel Driver
           No        Disabled  Stopped   OK
           Normal    No        No
cpqcissm   cpqcissm
           c:\windows\system32\drivers\cpqcissm.sys
           Kernel Driver       Yes       Boot
           Running   OK        Normal    No        Yes

cpqfcalm   cpqfcalm  Not Available       Kernel Driver
           No        Disabled  Stopped   OK
           Normal    No        No
crcdisk    CRC Disk Filter Driver
           c:\windows\system32\drivers\crcdisk.sys
           Kernel Driver       Yes       Boot
           Running   OK        Normal    No        Yes

dac960nt   dac960nt  Not Available       Kernel Driver
           No        Disabled  Stopped   OK
           Normal    No        No
dellcerc   dellcerc  Not Available       Kernel Driver
           No        Disabled  Stopped   OK
           Normal    No        No
dfsdriver  DfsDriver
           c:\windows\system32\drivers\dfs.sys
           File System Driver  Yes       Boot
           Running   OK        Normal    No        Yes

disk       Disk Driver
           c:\windows\system32\drivers\disk.sys
           Kernel Driver       Yes       Boot
           Running   OK        Normal    No        Yes

dmboot     dmboot
           c:\windows\system32\drivers\dmboot.sys
           Kernel Driver       No        Disabled
           Stopped   OK        Normal    No        No

dmio       Logical Disk Manager Driver
           c:\windows\system32\drivers\dmio.sys
           Kernel Driver       Yes       Boot
           Running   OK        Normal    No        Yes

dmload     dmload
           c:\windows\system32\drivers\dmload.sys
           Kernel Driver       Yes       Boot
           Running   OK        Normal    No        Yes

dpti2o     dpti2o    Not Available       Kernel Driver
           No        Disabled  Stopped   OK
           Normal    No        No
fastfat    Fastfat
           c:\windows\system32\drivers\fastfat.sys
           File System Driver  No        Disabled
           Stopped   OK        Normal    No        No

fdc        Floppy Disk Controller Driver
           c:\windows\system32\drivers\fdc.sys
           Kernel Driver       Yes       Manual
           Running   OK        Normal    No        Yes

fips       Fips
           c:\windows\system32\drivers\fips.sys
           Kernel Driver       Yes       System
           Running   OK        Normal    No        Yes

flpydisk   Floppy Disk Driver
           c:\windows\system32\drivers\flpydisk.sys
           Kernel Driver       Yes       Manual
           Running   OK        Normal    No        Yes

fltmgr     FltMgr
           c:\windows\system32\drivers\fltmgr.sys
           File System Driver  Yes       Boot
           Running   OK        Normal    No        Yes

ftdisk     Volume Manager Driver
           c:\windows\system32\drivers\ftdisk.sys
           Kernel Driver       Yes       Boot
           Running   OK        Normal    No        Yes

gpc        Generic Packet Classifier
           c:\windows\system32\drivers\msgpc.sys
           Kernel Driver       Yes       Manual
           Running   OK        Normal    No        Yes

hpn        hpn       Not Available       Kernel Driver
           No        Disabled  Stopped   OK
           Normal    No        No
hpqcissb   Smart Array Controllers Non-Miniport Bus
Driver     c:\windows\system32\drivers\hpqcissb.sys
           Kernel Driver       Yes       Boot
           Running   OK        Normal    No        Yes

hpqcissd   Smart Array Controllers Non-Miniport Disk
Driver     c:\windows\system32\drivers\hpqcissd.sys
           Kernel Driver       Yes       Boot
           Running   OK        Normal    No        Yes

hpt3xx     hpt3xx    Not Available       Kernel Driver
           No        Disabled  Stopped   OK
           Normal    No        No
http       HTTP
           c:\windows\system32\drivers\http.sys
           Kernel Driver       No        Manual
           Stopped   OK        Normal    No        No

i2omgmt    i2omgmt   Not Available       Kernel Driver
           No        System    Stopped   OK
           Normal    No        No
i2omp      i2omp     Not Available       Kernel Driver
           No        Disabled  Stopped   OK
           Normal    No        No
i8042prt   i8042 Keyboard and PS/2 Mouse Port Driver
           c:\windows\system32\drivers\i8042prt.sys
           Kernel Driver       Yes       System
           Running   OK        Normal    No        Yes

iirsp      iirsp     Not Available       Kernel Driver
           No        Disabled  Stopped   OK
           Normal    No        No
imapi      CD-Burning Filter Driver
           c:\windows\system32\drivers\imapi.sys
           Kernel Driver       No        System
           Stopped   OK        Normal    No        No

intelide   IntelIde  Not Available       Kernel Driver
           No        Disabled  Stopped   OK
           Normal    No        No
ip6fw      IPv6 Windows Firewall Driver
           c:\windows\system32\drivers\ip6fw.sys
           Kernel Driver       No        Manual
           Stopped   OK        Normal    No        No

ipfilterdriver      IP Traffic Filter Driver
           c:\windows\system32\drivers\ipfltdrv.sys
           Kernel Driver       No        Manual
           Stopped   OK        Normal    No        No

ipinip     IP in IP Tunnel Driver
           c:\windows\system32\drivers\ipinip.sys
           Kernel Driver       No        Manual
           Stopped   OK        Normal    No        No

ipnat      IP Network Address Translator
           c:\windows\system32\drivers\ipnat.sys
           Kernel Driver       No        Manual
           Stopped   OK        Normal    No        No

ipsec      IPSEC driver
           c:\windows\system32\drivers\ipsec.sys
           Kernel Driver       Yes       System
           Running   OK        Normal    No        Yes

ipsraidn   ipsraidn  Not Available       Kernel Driver
           No        Disabled  Stopped   OK
           Normal    No        No
isapnp     PnP ISA/EISA Bus Driver
           c:\windows\system32\drivers\isapnp.sys
           Kernel Driver       Yes       Boot
           Running   OK        Critical  No        Yes

kbdclass   Keyboard Class Driver
           c:\windows\system32\drivers\kbdclass.sys
           Kernel Driver       Yes       System
           Running   OK        Normal    No        Yes

ksecdd     KSecDD
           c:\windows\system32\drivers\ksecdd.sys
           Kernel Driver       Yes       Boot
```


© 2005 Hewlett-Packard Company. All rights reserved.

```
          Running   OK        Normal    No        Yes

lp6nds35  lp6nds35  Not Available       Kernel Driver
          No        Disabled  Stopped   OK
          Normal    No        No
mnmdd     mnmdd
          c:\windows\system32\drivers\mnmdd.sys
          Kernel Driver       Yes       System
          Running   OK        Ignore    No        Yes

modem     Modem
          c:\windows\system32\drivers\modem.sys
          Kernel Driver       No        Manual
          Stopped   OK        Ignore    No        No

mouclass  Mouse Class Driver
          c:\windows\system32\drivers\mouclass.sys
          Kernel Driver       Yes       System
          Running   OK        Normal    No        Yes

mountmgr  Mount Point Manager
          c:\windows\system32\drivers\mountmgr.sys
          Kernel Driver       Yes       Boot
          Running   OK        Normal    No        Yes

mraid35x  mraid35x  Not Available       Kernel Driver
          No        Disabled  Stopped   OK
          Normal    No        No
mrxdav    WebDav Client Redirector
          c:\windows\system32\drivers\mrxdav.sys
          File System Driver  No        Manual
          Stopped   OK        Normal    No        No

mrxsmb    MRXSMB
          c:\windows\system32\drivers\mrxsmb.sys
          File System Driver  Yes       System
          Running   OK        Normal    No        Yes

msfs      Msfs
          c:\windows\system32\drivers\msfs.sys
          File System Driver  Yes       System
          Running   OK        Normal    No        Yes

mssmbios  Microsoft System Management BIOS Driver
          c:\windows\system32\drivers\mssmbios.sys
          Kernel Driver       Yes       Manual
          Running   OK        Normal    No        Yes

mup       Mup
          c:\windows\system32\drivers\mup.sys
          File System Driver  Yes       Boot
          Running   OK        Normal    No        Yes

ndis      NDIS System Driver
          c:\windows\system32\drivers\ndis.sys
          Kernel Driver       Yes       Boot
          Running   OK        Normal    No        Yes

ndistapi  Remote Access NDIS TAPI Driver
          c:\windows\system32\drivers\ndistapi.sys
          Kernel Driver       Yes       Manual
          Running   OK        Normal    No        Yes

ndisuio   NDIS Usermode I/O Protocol
          c:\windows\system32\drivers\ndisuio.sys
          Kernel Driver       No        Manual
          Stopped   OK        Normal    No        No

ndiswan   Remote Access NDIS WAN Driver
          c:\windows\system32\drivers\ndiswan.sys
          Kernel Driver       Yes       Manual
          Running   OK        Normal    No        Yes

ndproxy   NDIS Proxy
          c:\windows\system32\drivers\ndproxy.sys
          Kernel Driver       Yes       Manual
          Running   OK        Normal    No        Yes

netbios   NetBIOS Interface
          c:\windows\system32\drivers\netbios.sys
          File System Driver  Yes       System
          Running   OK        Normal    No        Yes

netbt     NetBios over Tcpip
          c:\windows\system32\drivers\netbt.sys
          Kernel Driver       Yes       System
          Running   OK        Normal    No        Yes

nfrd960   nfrd960   Not Available       Kernel Driver
          No        Disabled  Stopped   OK
          Normal    No        No
npfs      Npfs
          c:\windows\system32\drivers\npfs.sys
          File System Driver  Yes       System
          Running   OK        Normal    No        Yes

ntfs      Ntfs
          c:\windows\system32\drivers\ntfs.sys
          File System Driver  Yes       Disabled
          Running   OK        Normal    No        Yes

null      Null
          c:\windows\system32\drivers\null.sys
          Kernel Driver       Yes       System
          Running   OK        Normal    No        Yes

parport   Parport
          c:\windows\system32\drivers\parport.sys
          Kernel Driver       No        Manual
          Stopped   OK        Ignore    No        No

partmgr   Partition Manager
          c:\windows\system32\drivers\partmgr.sys
          Kernel Driver       Yes       Boot
          Running   OK        Normal    No        Yes

pci       PCI Bus Driver
          c:\windows\system32\drivers\pci.sys
          Kernel Driver       Yes       Boot
          Running   OK        Critical  No        Yes

pciide    PCIIde
          c:\windows\system32\drivers\pciide.sys
          Kernel Driver       Yes       Boot
          Running   OK        Normal    No        Yes

pcmcia    Pcmcia
          c:\windows\system32\drivers\pcmcia.sys
          Kernel Driver       No        Disabled
          Stopped   OK        Normal    No        No

pdcomp    PDCOMP    Not Available       Kernel Driver
          No        Manual    Stopped   OK
          Ignore    No        No
pdframe   PDFRAME   Not Available       Kernel Driver
          No        Manual    Stopped   OK
          Ignore    No        No
pdreli    PDRELI    Not Available       Kernel Driver
          No        Manual    Stopped   OK
          Ignore    No        No
pdrframe  PDRFRAME  Not Available       Kernel Driver
          No        Manual    Stopped   OK
          Ignore    No        No
perc2     perc2     Not Available       Kernel Driver
          No        Disabled  Stopped   OK
          Normal    No        No
perc2hib  perc2hib  Not Available       Kernel Driver
          No        Disabled  Stopped   OK
          Normal    No        No
pptpminiport        WAN Miniport (PPTP)
          c:\windows\system32\drivers\raspptp.sys
          Kernel Driver       Yes       Manual
          Running   OK        Normal    No        Yes

processor Processor Driver
          c:\windows\system32\drivers\processr.sys
          Kernel Driver       Yes       Manual
          Running   OK        Normal    No        Yes

ptilink   Direct Parallel Link Driver
          c:\windows\system32\drivers\ptilink.sys
          Kernel Driver       Yes       Manual
          Running   OK        Normal    No        Yes

q57w2k    HP NC7782 Gigabit Server Adapter
          c:\windows\system32\drivers\q57xp32.sys
          Kernel Driver       Yes       Manual
          Running   OK        Normal    No        Yes

ql1080    ql1080    Not Available       Kernel Driver
          No        Disabled  Stopped   OK
          Normal    No        No
ql10wnt   Ql10wnt   Not Available       Kernel Driver
          No        Disabled  Stopped   OK
          Normal    No        No
ql12160   ql12160   Not Available       Kernel Driver
          No        Disabled  Stopped   OK
          Normal    No        No
ql1240    ql1240    Not Available       Kernel Driver
          No        Disabled  Stopped   OK
          Normal    No        No
ql1280    ql1280    Not Available       Kernel Driver
          No        Disabled  Stopped   OK
          Normal    No        No
ql2100    ql2100    Not Available       Kernel Driver
          No        Disabled  Stopped   OK
          Normal    No        No
```


© 2005 Hewlett-Packard Company. All rights reserved.

```
ql2200    ql2200    Not Available       Kernel Driver
          No        Disabled  Stopped   OK
          Normal    No        No
ql2300    ql2300    Not Available       Kernel Driver
          No        Disabled  Stopped   OK
          Normal    No        No
rasacd    Remote Access Auto Connection Driver
          c:\windows\system32\drivers\rasacd.sys
          Kernel Driver       Yes       System
          Running   OK        Normal    No        Yes

rasl2tp   WAN Miniport (L2TP)
          c:\windows\system32\drivers\rasl2tp.sys
          Kernel Driver       Yes       Manual
          Running   OK        Normal    No        Yes

raspppoe  Remote Access PPPOE Driver
          c:\windows\system32\drivers\raspppoe.sys
          Kernel Driver       Yes       Manual
          Running   OK        Normal    No        Yes

raspti    Direct Parallel
          c:\windows\system32\drivers\raspti.sys
          Kernel Driver       Yes       Manual
          Running   OK        Normal    No        Yes

rdbss     Rdbss
          c:\windows\system32\drivers\rdbss.sys
          File System Driver  Yes       System
          Running   OK        Normal    No        Yes

rdpcdd    RDPCDD
          c:\windows\system32\drivers\rdpcdd.sys
          Kernel Driver       Yes       System
          Running   OK        Ignore    No        Yes

rdpdr     Terminal Server Device Redirector Driver
          c:\windows\system32\drivers\rdpdr.sys
          Kernel Driver       Yes       Manual
          Running   OK        Normal    No        Yes

rdpwd     RDPWD
          c:\windows\system32\drivers\rdpwd.sys
          Kernel Driver       Yes       Manual
          Running   OK        Ignore    No        Yes

redbook   Digital CD Audio Playback Filter Driver
          c:\windows\system32\drivers\redbook.sys
          Kernel Driver       Yes       System
          Running   OK        Normal    No        Yes

secdrv    Secdrv
          c:\windows\system32\drivers\secdrv.sys
          Kernel Driver       No        Manual
          Stopped   OK        Normal    No        No

serenum   Serenum Filter Driver
          c:\windows\system32\drivers\serenum.sys
          Kernel Driver       Yes       Manual
          Running   OK        Normal    No        Yes

serial    Serial port driver
          c:\windows\system32\drivers\serial.sys
          Kernel Driver       Yes       System
          Running   OK        Ignore    No        Yes

sfloppy   Sfloppy
          c:\windows\system32\drivers\sfloppy.sys
          Kernel Driver       No        System
          Stopped   OK        Ignore    No        No

simbad    Simbad    Not Available       Kernel Driver
          No        Disabled  Stopped   OK
          Normal    No        No
sparrow   Sparrow   Not Available       Kernel Driver
          No        Disabled  Stopped   OK
          Normal    No        No
srv       Srv
          c:\windows\system32\drivers\srv.sys
          File System Driver  Yes       Manual
          Running   OK        Normal    No        Yes

swenum    Software Bus Driver
          c:\windows\system32\drivers\swenum.sys
          Kernel Driver       Yes       Manual
          Running   OK        Normal    No        Yes

symc810   symc810   Not Available       Kernel Driver
          No        Disabled  Stopped   OK
          Normal    No        No
symc8xx   symc8xx   Not Available       Kernel Driver
          No        Disabled  Stopped   OK
          Normal    No        No
symmpi    symmpi    Not Available       Kernel Driver
          No        Disabled  Stopped   OK
          Normal    No        No
sym_hi    sym_hi    Not Available       Kernel Driver
          No        Disabled  Stopped   OK
          Normal    No        No
sym_u3    sym_u3    Not Available       Kernel Driver
          No        Disabled  Stopped   OK
          Normal    No        No
tcpip     TCP/IP Protocol Driver
          c:\windows\system32\drivers\tcpip.sys
          Kernel Driver       Yes       System
          Running   OK        Normal    No        Yes

tdpipe    TDPIPE
          c:\windows\system32\drivers\tdpipe.sys
          Kernel Driver       No        Manual
          Stopped   OK        Ignore    No        No

tdtcp     TDTCP
          c:\windows\system32\drivers\tdtcp.sys
          Kernel Driver       Yes       Manual
          Running   OK        Ignore    No        Yes

termdd    Terminal Device Driver
          c:\windows\system32\drivers\termdd.sys
          Kernel Driver       Yes       System
          Running   OK        Normal    No        Yes

toside    TosIde    Not Available       Kernel Driver
          No        Disabled  Stopped   OK
          Normal    No        No

udfs      Udfs
          c:\windows\system32\drivers\udfs.sys
          File System Driver  No        Disabled
          Stopped   OK        Normal    No        No

ultra     ultra     Not Available       Kernel Driver
          No        Disabled  Stopped   OK
          Normal    No        No
update    Microcode Update Driver
          c:\windows\system32\drivers\update.sys
          Kernel Driver       Yes       Manual
          Running   OK        Normal    No        Yes

usbhub    USB2 Enabled Hub
          c:\windows\system32\drivers\usbhub.sys
          Kernel Driver       Yes       Manual
          Running   OK        Normal    No        Yes

usbohci   Microsoft USB Open Host Controller Miniport
Driver    c:\windows\system32\drivers\usbohci.sys
          Kernel Driver       Yes       Manual
          Running   OK        Normal    No        Yes

vgasave   VGA Display Controller.
          c:\windows\system32\drivers\vga.sys
          Kernel Driver       Yes       System
          Running   OK        Ignore    No        Yes

viaide    ViaIde    Not Available       Kernel Driver
          No        Disabled  Stopped   OK
          Normal    No        No
volsnap   Storage volumes
          c:\windows\system32\drivers\volsnap.sys
          Kernel Driver       Yes       Boot
          Running   OK        Normal    No        Yes

wanarp    Remote Access IP ARP Driver
          c:\windows\system32\drivers\wanarp.sys
          Kernel Driver       Yes       Manual
          Running   OK        Normal    No        Yes

wdica     WDICA     Not Available       Kernel Driver
          No        Manual    Stopped   OK
          Ignore    No        No
wlbs      Network Load Balancing
          c:\windows\system32\drivers\wlbs.sys
          Kernel Driver       No        Manual
          Stopped   OK        Normal    No        No


[Signed Drivers]

Device Name         Signed    Device Class
          Driver Version      Driver Date
          Manufacturer        INF Name  Driver Name
          Device ID
Microsoft System Management BIOS Driver Yes
          SYSTEM    5.2.3790.1830       10/1/2002
          (Standard system devices)     machine.inf
          Not Available       ROOT\SYSTEM\0002
Microcode Update Device       Yes       SYSTEM
          5.2.3790.0          10/1/2002 (Standard
```


© 2005 Hewlett-Packard Company. All rights reserved.

```
system devices)     machine.inf         Not Available
          ROOT\SYSTEM\0001
Plug and Play Software Device Enumerator          Yes
          SYSTEM    5.2.3790.0          10/1/2002
          (Standard system devices)     machine.inf
          Not Available       ROOT\SYSTEM\0000
Terminal Server Mouse Driver  Yes       SYSTEM
          5.2.3790.0          10/1/2002 (Standard
system devices)     machine.inf         Not Available
          ROOT\RDP_MOU\0000
Terminal Server Keyboard Driver         Yes
          SYSTEM    5.2.3790.0          10/1/2002
          (Standard system devices)     machine.inf
          Not Available       ROOT\RDP_KBD\0000
Terminal Server Device Redirector       Yes
          SYSTEM    5.2.3790.0          10/1/2002
          (Standard system devices)     machine.inf
          Not Available       ROOT\RDPDR\0000
Direct Parallel     Yes       NET       5.2.3790.0
          10/1/2002 Microsoft netrasa.inf         Not
Available ROOT\MS_PTIMINIPORT\0000
WAN Miniport (PPTP) Yes       NET       5.2.3790.0
          10/1/2002 Microsoft netrasa.inf         Not
Available ROOT\MS_PPTPMINIPORT\0000
WAN Miniport (PPPOE)          Yes       NET
          5.2.3790.0          10/1/2002 Microsoft
          netrasa.inf         Not Available
          ROOT\MS_PPPOEMINIPORT\0000
WAN Miniport (IP)   Yes       NET       5.2.3790.0
          10/1/2002 Microsoft netrasa.inf         Not
Available ROOT\MS_NDISWANIP\0000
WAN Miniport (L2TP) Yes       NET       5.2.3790.0
          10/1/2002 Microsoft netrasa.inf         Not
Available ROOT\MS_L2TPMINIPORT\0000
Video Codecs        Yes       MEDIA     5.2.3790.0
          10/1/2002 (Standard system devices)
          wave.inf  Not Available
          ROOT\MEDIA\MS_MMVID
Legacy Video Capture Devices  Yes       MEDIA
          5.2.3790.0          10/1/2002 (Standard
system devices)     wave.inf  Not Available
          ROOT\MEDIA\MS_MMVCD
Media Control Devices         Yes       MEDIA
          5.2.3790.0          10/1/2002 (Standard
system devices)     wave.inf  Not Available
          ROOT\MEDIA\MS_MMMCI
Legacy Audio Drivers          Yes       MEDIA
          5.2.3790.0          10/1/2002 (Standard
system devices)     wave.inf  Not Available
          ROOT\MEDIA\MS_MMDRV
Audio Codecs        Yes       MEDIA     5.2.3790.0
          10/1/2002 (Standard system devices)
          wave.inf  Not Available
          ROOT\MEDIA\MS_MMACM
Remote Access IP ARP Driver   Not Available
          LEGACYDRIVER        Not Available       Not
Available Not Available       Not Available       Not
Available ROOT\LEGACY_WANARP\0000
volsnap   Not Available       LEGACYDRIVER        Not
Available Not Available       Not Available       Not
Available Not Available
          ROOT\LEGACY_VOLSNAP\0000
VGA Display Controller.       Not Available
          LEGACYDRIVER        Not Available       Not
Available Not Available       Not Available       Not
Available ROOT\LEGACY_VGASAVE\0000
TDTCP     Not Available       LEGACYDRIVER        Not
Available Not Available       Not Available       Not
Available Not Available       ROOT\LEGACY_TDTCP\0000

TCP/IP Protocol Driver        Not Available
          LEGACYDRIVER        Not Available       Not
Available Not Available       Not Available       Not
Available ROOT\LEGACY_TCPIP\0000
RDPWD     Not Available       LEGACYDRIVER        Not
Available Not Available       Not Available       Not
Available Not Available       ROOT\LEGACY_RDPWD\0000

RDPCDD    Not Available       LEGACYDRIVER        Not
Available Not Available       Not Available       Not
Available Not Available       ROOT\LEGACY_RDPCDD\0000

Remote Access Auto Connection Driver    Not Available
          LEGACYDRIVER        Not Available       Not
Available Not Available       Not Available       Not
Available ROOT\LEGACY_RASACD\0000
Partition Manager   Not Available       LEGACYDRIVER
          Not Available       Not Available       Not
Available Not Available       Not Available
          ROOT\LEGACY_PARTMGR\0000
Null      Not Available       LEGACYDRIVER        Not
Available Not Available       Not Available       Not
Available Not Available       ROOT\LEGACY_NULL\0000

NetBios over Tcpip  Not Available       LEGACYDRIVER
          Not Available       Not Available       Not
Available Not Available       Not Available
          ROOT\LEGACY_NETBT\0000
NDProxy   Not Available       LEGACYDRIVER        Not
Available Not Available       Not Available       Not
Available Not Available
          ROOT\LEGACY_NDPROXY\0000
NDIS Usermode I/O Protocol    Not Available
          LEGACYDRIVER        Not Available       Not
Available Not Available       Not Available       Not
Available ROOT\LEGACY_NDISUIO\0000
Remote Access NDIS TAPI Driver          Not Available
          LEGACYDRIVER        Not Available       Not
Available Not Available       Not Available       Not
Available ROOT\LEGACY_NDISTAPI\0000
NDIS System Driver  Not Available       LEGACYDRIVER
          Not Available       Not Available       Not
Available Not Available       Not Available
          ROOT\LEGACY_NDIS\0000
mountmgr  Not Available       LEGACYDRIVER        Not
Available Not Available       Not Available       Not
Available Not Available
          ROOT\LEGACY_MOUNTMGR\0000
mnmdd     Not Available       LEGACYDRIVER        Not
Available Not Available       Not Available       Not
Available Not Available       ROOT\LEGACY_MNMDD\0000

ksecdd    Not Available       LEGACYDRIVER        Not
Available Not Available       Not Available       Not
Available Not Available       ROOT\LEGACY_KSECDD\0000

IPSEC driver        Not Available       LEGACYDRIVER
          Not Available       Not Available       Not
Available Not Available       Not Available
          ROOT\LEGACY_IPSEC\0000
Generic Packet Classifier     Not Available
          LEGACYDRIVER        Not Available       Not
Available Not Available       Not Available       Not
Available ROOT\LEGACY_GPC\0000
Fips      Not Available       LEGACYDRIVER        Not
Available Not Available       Not Available       Not
Available Not Available       ROOT\LEGACY_FIPS\0000

dmload    Not Available       LEGACYDRIVER        Not
Available Not Available       Not Available       Not
Available Not Available       ROOT\LEGACY_DMLOAD\0000

dmboot    Not Available       LEGACYDRIVER        Not
Available Not Available       Not Available       Not
Available Not Available       ROOT\LEGACY_DMBOOT\0000

CRC Disk Filter Driver        Not Available
          LEGACYDRIVER        Not Available       Not
Available Not Available       Not Available       Not
Available ROOT\LEGACY_CRCDISK\0000
Beep      Not Available       LEGACYDRIVER        Not
Available Not Available       Not Available       Not
Available Not Available       ROOT\LEGACY_BEEP\0000

AFD Networking Support Environment      Not Available
          LEGACYDRIVER        Not Available       Not
Available Not Available       Not Available       Not
Available ROOT\LEGACY_AFD\0000
Generic volume      Yes       VOLUME    5.2.3790.0
          10/1/2002 Microsoft volume.inf          Not
Available
          STORAGE\VOLUME\1&30A96598&0&SIGNATURE94D494
D4OFFSET4000LENGTH87A3D0000
Generic volume      Yes       VOLUME    5.2.3790.1830
          10/1/2002 Microsoft volume.inf          Not
Available
          STORAGE\VOLUME\1&30A96598&0&SIGNATURE3AB281
31OFFSET10000LENGTH3690900000
Generic volume      Yes       VOLUME    5.2.3790.1830
          10/1/2002 Microsoft volume.inf          Not
Available
          STORAGE\VOLUME\1&30A96598&0&SIGNATURE3AB281
32OFFSET10000LENGTH130AB00000
Generic volume      Yes       VOLUME    5.2.3790.1830
          10/1/2002 Microsoft volume.inf          Not
Available
          STORAGE\VOLUME\1&30A96598&0&SIGNATURE3AB281
33OFFSET10000LENGTH130AB00000
Generic volume      Yes       VOLUME    5.2.3790.1830
          10/1/2002 Microsoft volume.inf          Not
Available
          STORAGE\VOLUME\1&30A96598&0&SIGNATURE3AB281
34OFFSET10000LENGTH130AB00000
Generic volume      Yes       VOLUME    5.2.3790.1830
          10/1/2002 Microsoft volume.inf          Not
Available
```


© 2005 Hewlett-Packard Company. All rights reserved.

```
          STORAGE\VOLUME\1&30A96598&0&SIGNATURE214CC7
75OFFSET10000LENGTH76B6800000
Generic volume      Yes       VOLUME    5.2.3790.1830
          10/1/2002 Microsoft volume.inf          Not
Available
          STORAGE\VOLUME\1&30A96598&0&SIGNATURE3AB281
35OFFSET10000LENGTH130AB00000
Generic volume      Yes       VOLUME    5.2.3790.1830
          10/1/2002 Microsoft volume.inf          Not
Available
          STORAGE\VOLUME\1&30A96598&0&SIGNATURE3AB281
37OFFSET10000LENGTH130AB00000
Generic volume      Yes       VOLUME    5.2.3790.1830
          10/1/2002 Microsoft volume.inf          Not
Available
          STORAGE\VOLUME\1&30A96598&0&SIGNATURE3AB281
38OFFSET10000LENGTH130AB00000
Generic volume      Yes       VOLUME    5.2.3790.1830
          10/1/2002 Microsoft volume.inf          Not
Available
          STORAGE\VOLUME\1&30A96598&0&SIGNATURE3AB281
3AOFFSET10000LENGTH130AB00000
Generic volume      Yes       VOLUME    5.2.3790.1830
          10/1/2002 Microsoft volume.inf          Not
Available
          STORAGE\VOLUME\1&30A96598&0&SIGNATURE3AB281
3BOFFSET7E00LENGTH6D2D04E200
Generic volume      Yes       VOLUME    5.2.3790.1830
          10/1/2002 Microsoft volume.inf          Not
Available
          STORAGE\VOLUME\1&30A96598&0&SIGNATURE3AB281
3DOFFSET10000LENGTH130AB00000
Generic volume      Yes       VOLUME    5.2.3790.1830
          10/1/2002 Microsoft volume.inf          Not
Available
          STORAGE\VOLUME\1&30A96598&0&SIGNATURE3AB281
3EOFFSET7E00LENGTH6D2D04E200
Generic volume      Yes       VOLUME    5.2.3790.1830
          10/1/2002 Microsoft volume.inf          Not
Available
          STORAGE\VOLUME\1&30A96598&0&SIGNATURE3AB281
3FOFFSET10000LENGTH130AB00000
Generic volume      Yes       VOLUME    5.2.3790.1830
          10/1/2002 Microsoft volume.inf          Not
Available
          STORAGE\VOLUME\1&30A96598&0&SIGNATURE3AB281
20OFFSET10000LENGTH3690900000
Generic volume      Yes       VOLUME    5.2.3790.1830
          10/1/2002 Microsoft volume.inf          Not
Available
          STORAGE\VOLUME\1&30A96598&0&SIGNATURE3AB281
21OFFSET10000LENGTH130AB00000
Generic volume      Yes       VOLUME    5.2.3790.1830
          10/1/2002 Microsoft volume.inf          Not
Available
          STORAGE\VOLUME\1&30A96598&0&SIGNATURE3AB281
22OFFSET7E00LENGTH6D2D04E200
Generic volume      Yes       VOLUME    5.2.3790.1830
          10/1/2002 Microsoft volume.inf          Not
Available
          STORAGE\VOLUME\1&30A96598&0&SIGNATURE3AB281
23OFFSET10000LENGTH130AB00000
Generic volume      Yes       VOLUME    5.2.3790.1830
          10/1/2002 Microsoft volume.inf          Not
Available
          STORAGE\VOLUME\1&30A96598&0&SIGNATURE3AB281
24OFFSET7E00LENGTH6D2D04E200
Generic volume      Yes       VOLUME    5.2.3790.1830
          10/1/2002 Microsoft volume.inf          Not
Available
          STORAGE\VOLUME\1&30A96598&0&SIGNATURE3AB281
25OFFSET10000LENGTH130AB00000
Volume Manager      Yes       SYSTEM    5.2.3790.0
          10/1/2002 (Standard system devices)
          machine.inf         Not Available
          ROOT\FTDISK\0000
Logical Disk Manager          Yes       SYSTEM
          5.2.3790.0          10/1/2002 (Standard
system devices)     machine.inf         Not Available
          ROOT\DMIO\0000
ACPI Fixed Feature Button     Yes       SYSTEM
          5.2.3790.0          10/1/2002 (Standard
system devices)     machine.inf         Not Available
          ACPI\FIXEDBUTTON\2&DABA3FF&0
AMD-8131 HyperTransport(tm) IOAPIC Controller     Yes
          SYSTEM    5.2.3790.1830       10/1/2002 AMD
          machine.inf         Not Available
          PCI\VEN_1022&DEV_7451&SUBSYS_00000000&REV_0
1\3&33B859B7&0&61
Smart Array Logical Volume    No        DISKDRIVE
          5.6.2.32  7/14/2004 Hewlett-Packard
          oem2.inf  Not Available
          HPQCISS\DISK&VEN_HP&PROD_LOGICAL_VOLUME\6&3
45B2707&0&0000004000000000
Smart Array 6400 Controller U320 Expansion Module
(Non-Miniport)      No        SCSIADAPTER
          5.12.2.32 8/11/2004 Hewlett-Packard
          oem1.inf  Not Available
          PCI\VEN_0E11&DEV_0046&SUBSYS_409D0E11&REV_0
1\5&282C4885&0&286060
Smart Array Logical Volume    No        DISKDRIVE
          5.6.2.32  7/14/2004 Hewlett-Packard
          oem2.inf  Not Available
          HPQCISS\DISK&VEN_HP&PROD_LOGICAL_VOLUME\6&2
670E50&0&0000004000000000
Smart Array 6400 Controller (Non-Miniport)        No
          SCSIADAPTER         5.12.2.32 8/11/2004
          Hewlett-Packard     oem1.inf  Not Available
          PCI\VEN_0E11&DEV_0046&SUBSYS_409C0E11&REV_0
1\5&282C4885&0&206060
PCI standard PCI-to-PCI bridge          Yes
          SYSTEM    5.2.3790.0          10/1/2002
          (Standard system devices)     machine.inf
          Not Available
          PCI\VEN_1014&DEV_01A7&SUBSYS_00000000&REV_0
2\4&62BA2CA&0&6060
Smart Array Logical Volume    No        DISKDRIVE
          5.6.2.32  7/14/2004 Hewlett-Packard
          oem2.inf  Not Available
          HPQCISS\DISK&VEN_HP&PROD_LOGICAL_VOLUME\6&1
EC6BFB6&0&0000004000000000
Smart Array 6400 Controller U320 Expansion Module
(Non-Miniport)      No        SCSIADAPTER
          5.12.2.32 8/11/2004 Hewlett-Packard
          oem1.inf  Not Available
          PCI\VEN_0E11&DEV_0046&SUBSYS_409D0E11&REV_0
1\5&30FCE3FC&0&285860
Smart Array Logical Volume    No        DISKDRIVE
          5.6.2.32  7/14/2004 Hewlett-Packard
          oem2.inf  Not Available
          HPQCISS\DISK&VEN_HP&PROD_LOGICAL_VOLUME\6&1
5200E66&0&0000004000000000
Smart Array 6400 Controller (Non-Miniport)        No
          SCSIADAPTER         5.12.2.32 8/11/2004
          Hewlett-Packard     oem1.inf  Not Available
          PCI\VEN_0E11&DEV_0046&SUBSYS_409C0E11&REV_0
1\5&30FCE3FC&0&205860
PCI standard PCI-to-PCI bridge          Yes
          SYSTEM    5.2.3790.0          10/1/2002
          (Standard system devices)     machine.inf
          Not Available
          PCI\VEN_1014&DEV_01A7&SUBSYS_00000000&REV_0
2\4&62BA2CA&0&5860
PCI standard PCI-to-PCI bridge          Yes
          SYSTEM    5.2.3790.0          10/1/2002
          (Standard system devices)     machine.inf
          Not Available
          PCI\VEN_1022&DEV_7450&SUBSYS_00000000&REV_1
2\3&33B859B7&0&60
AMD-8131 HyperTransport(tm) IOAPIC Controller     Yes
          SYSTEM    5.2.3790.1830       10/1/2002 AMD
          machine.inf         Not Available
          PCI\VEN_1022&DEV_7451&SUBSYS_00000000&REV_0
1\3&33B859B7&0&59
Smart Array Logical Volume    No        DISKDRIVE
          5.6.2.32  7/14/2004 Hewlett-Packard
          oem2.inf  Not Available
          HPQCISS\DISK&VEN_HP&PROD_LOGICAL_VOLUME\5&C
633B0D&0&0000014001000000
Smart Array 642 Controller (Non-Miniport)         No
          SCSIADAPTER         5.12.2.32 8/11/2004
          Hewlett-Packard     oem1.inf  Not Available
          PCI\VEN_0E11&DEV_0046&SUBSYS_409B0E11&REV_0
1\4&2534A57B&0&5058
Smart Array Logical Volume    No        DISKDRIVE
          5.6.2.32  7/14/2004 Hewlett-Packard
          oem2.inf  Not Available
          HPQCISS\DISK&VEN_HP&PROD_LOGICAL_VOLUME\6&3
A915E4E&0&0000004000000000
Smart Array 6400 Controller U320 Expansion Module
(Non-Miniport)      No        SCSIADAPTER
          5.12.2.32 8/11/2004 Hewlett-Packard
          oem1.inf  Not Available
          PCI\VEN_0E11&DEV_0046&SUBSYS_409D0E11&REV_0
1\5&1B3A307E&0&284858
Smart Array Logical Volume    No        DISKDRIVE
          5.6.2.32  7/14/2004 Hewlett-Packard
          oem2.inf  Not Available
          HPQCISS\DISK&VEN_HP&PROD_LOGICAL_VOLUME\6&A
B01D09&0&0000004000000000
Smart Array 6400 Controller (Non-Miniport)        No
          SCSIADAPTER         5.12.2.32 8/11/2004
          Hewlett-Packard     oem1.inf  Not Available
          PCI\VEN_0E11&DEV_0046&SUBSYS_409C0E11&REV_0
1\5&1B3A307E&0&204858
PCI standard PCI-to-PCI bridge          Yes
          SYSTEM    5.2.3790.0          10/1/2002
          (Standard system devices)     machine.inf
```


© 2005 Hewlett-Packard Company. All rights reserved.

```
          Not Available
          PCI\VEN_1014&DEV_01A7&SUBSYS_00000000&REV_0
2\4&2534A57B&0&4858
PCI standard PCI-to-PCI bridge          Yes
          SYSTEM    5.2.3790.0          10/1/2002
          (Standard system devices)     machine.inf
          Not Available
          PCI\VEN_1022&DEV_7450&SUBSYS_00000000&REV_1
2\3&33B859B7&0&58
AMD-8131 HyperTransport(tm) IOAPIC Controller     Yes
          SYSTEM    5.2.3790.1830       10/1/2002 AMD
          machine.inf         Not Available
          PCI\VEN_1022&DEV_7451&SUBSYS_00000000&REV_0
1\3&33B859B7&0&51
Smart Array Logical Volume    No        DISKDRIVE
          5.6.2.32  7/14/2004 Hewlett-Packard
          oem2.inf  Not Available
          HPQCISS\DISK&VEN_HP&PROD_LOGICAL_VOLUME\6&9
BFB032&0&0000004000000000
Smart Array 6400 Controller U320 Expansion Module
(Non-Miniport)      No        SCSIADAPTER
          5.12.2.32 8/11/2004 Hewlett-Packard
          oem1.inf  Not Available
          PCI\VEN_0E11&DEV_0046&SUBSYS_409D0E11&REV_0
1\5&25998046&0&287050
Smart Array Logical Volume    No        DISKDRIVE
          5.6.2.32  7/14/2004 Hewlett-Packard
          oem2.inf  Not Available
          HPQCISS\DISK&VEN_HP&PROD_LOGICAL_VOLUME\6&3
B81CB25&0&0000004000000000
Smart Array 6400 Controller (Non-Miniport)        No
          SCSIADAPTER         5.12.2.32 8/11/2004
          Hewlett-Packard     oem1.inf  Not Available
          PCI\VEN_0E11&DEV_0046&SUBSYS_409C0E11&REV_0
1\5&25998046&0&207050
PCI standard PCI-to-PCI bridge          Yes
          SYSTEM    5.2.3790.0          10/1/2002
          (Standard system devices)     machine.inf
          Not Available
          PCI\VEN_1014&DEV_01A7&SUBSYS_00000000&REV_0
2\4&9630B56&0&7050
PCI standard PCI-to-PCI bridge          Yes
          SYSTEM    5.2.3790.0          10/1/2002
          (Standard system devices)     machine.inf
          Not Available
          PCI\VEN_1022&DEV_7450&SUBSYS_00000000&REV_1
2\3&33B859B7&0&50
AMD-8131 HyperTransport(tm) IOAPIC Controller     Yes
          SYSTEM    5.2.3790.1830       10/1/2002 AMD
          machine.inf         Not Available
          PCI\VEN_1022&DEV_7451&SUBSYS_00000000&REV_0
1\3&33B859B7&0&49
Smart Array Logical Volume    No        DISKDRIVE
          5.6.2.32  7/14/2004 Hewlett-Packard
          oem2.inf  Not Available
          HPQCISS\DISK&VEN_HP&PROD_LOGICAL_VOLUME\6&1
EC08C08&0&0100004000000000
Smart Array Logical Volume    No        DISKDRIVE
          5.6.2.32  7/14/2004 Hewlett-Packard
          oem2.inf  Not Available
          HPQCISS\DISK&VEN_HP&PROD_LOGICAL_VOLUME\6&1
EC08C08&0&0000004000000000
Smart Array 6400 Controller U320 Expansion Module
(Non-Miniport)      No        SCSIADAPTER
          5.12.2.32 8/11/2004 Hewlett-Packard
          oem1.inf  Not Available
          PCI\VEN_0E11&DEV_0046&SUBSYS_409D0E11&REV_0
1\5&56DD264&0&286848
Smart Array Logical Volume    No        DISKDRIVE
          5.6.2.32  7/14/2004 Hewlett-Packard
          oem2.inf  Not Available
          HPQCISS\DISK&VEN_HP&PROD_LOGICAL_VOLUME\6&1
BB4D19C&0&0100004000000000
Smart Array Logical Volume    No        DISKDRIVE
          5.6.2.32  7/14/2004 Hewlett-Packard
          oem2.inf  Not Available
          HPQCISS\DISK&VEN_HP&PROD_LOGICAL_VOLUME\6&1
BB4D19C&0&0000004000000000
Smart Array 6400 Controller (Non-Miniport)        No
          SCSIADAPTER         5.12.2.32 8/11/2004
          Hewlett-Packard     oem1.inf  Not Available
          PCI\VEN_0E11&DEV_0046&SUBSYS_409C0E11&REV_0
1\5&56DD264&0&206848
PCI standard PCI-to-PCI bridge          Yes
          SYSTEM    5.2.3790.0          10/1/2002
          (Standard system devices)     machine.inf
          Not Available
          PCI\VEN_1014&DEV_01A7&SUBSYS_00000000&REV_0
2\4&25F4D2AC&0&6848
PCI standard PCI-to-PCI bridge          Yes
          SYSTEM    5.2.3790.0          10/1/2002
          (Standard system devices)     machine.inf
          Not Available
          PCI\VEN_1022&DEV_7450&SUBSYS_00000000&REV_1
2\3&33B859B7&0&48
PCI bus   Yes       SYSTEM    5.2.3790.0
          10/1/2002 (Standard system devices)
          machine.inf         Not Available
          ACPI\PNP0A03\8
AMD Miscellaneous Configuration         Yes
          SYSTEM    5.2.3790.1830       10/1/2002 AMD
          machine.inf         Not Available
          PCI\VEN_1022&DEV_1103&SUBSYS_00000000&REV_0
0\3&20FEA912&0&DB
AMD DRAM and HyperTransport(tm) Trace Mode
Configuration       Yes       SYSTEM    5.2.3790.1830
          10/1/2002 AMD       machine.inf         Not
Available
          PCI\VEN_1022&DEV_1102&SUBSYS_00000000&REV_0
0\3&20FEA912&0&DA
AMD Address Map Configuration Yes       SYSTEM
          5.2.3790.1830       10/1/2002 AMD
          machine.inf         Not Available
          PCI\VEN_1022&DEV_1101&SUBSYS_00000000&REV_0
0\3&20FEA912&0&D9
AMD HyperTransport(tm) Configuration    Yes
          SYSTEM    5.2.3790.1830       10/1/2002 AMD
          machine.inf         Not Available
          PCI\VEN_1022&DEV_1100&SUBSYS_00000000&REV_0
0\3&20FEA912&0&D8
AMD Miscellaneous Configuration         Yes
          SYSTEM    5.2.3790.1830       10/1/2002 AMD
          machine.inf         Not Available
          PCI\VEN_1022&DEV_1103&SUBSYS_00000000&REV_0
0\3&20FEA912&0&D3
AMD DRAM and HyperTransport(tm) Trace Mode
Configuration       Yes       SYSTEM    5.2.3790.1830
          10/1/2002 AMD       machine.inf         Not
Available
          PCI\VEN_1022&DEV_1102&SUBSYS_00000000&REV_0
0\3&20FEA912&0&D2
AMD Address Map Configuration Yes       SYSTEM
          5.2.3790.1830       10/1/2002 AMD
          machine.inf         Not Available
          PCI\VEN_1022&DEV_1101&SUBSYS_00000000&REV_0
0\3&20FEA912&0&D1
AMD HyperTransport(tm) Configuration    Yes
          SYSTEM    5.2.3790.1830       10/1/2002 AMD
          machine.inf         Not Available
          PCI\VEN_1022&DEV_1100&SUBSYS_00000000&REV_0
0\3&20FEA912&0&D0
AMD Miscellaneous Configuration         Yes
          SYSTEM    5.2.3790.1830       10/1/2002 AMD
          machine.inf         Not Available
          PCI\VEN_1022&DEV_1103&SUBSYS_00000000&REV_0
0\3&20FEA912&0&CB
AMD DRAM and HyperTransport(tm) Trace Mode
Configuration       Yes       SYSTEM    5.2.3790.1830
          10/1/2002 AMD       machine.inf         Not
Available
          PCI\VEN_1022&DEV_1102&SUBSYS_00000000&REV_0
0\3&20FEA912&0&CA
AMD Address Map Configuration Yes       SYSTEM
          5.2.3790.1830       10/1/2002 AMD
          machine.inf         Not Available
          PCI\VEN_1022&DEV_1101&SUBSYS_00000000&REV_0
0\3&20FEA912&0&C9
AMD HyperTransport(tm) Configuration    Yes
          SYSTEM    5.2.3790.1830       10/1/2002 AMD
          machine.inf         Not Available
          PCI\VEN_1022&DEV_1100&SUBSYS_00000000&REV_0
0\3&20FEA912&0&C8
AMD Miscellaneous Configuration         Yes
          SYSTEM    5.2.3790.1830       10/1/2002 AMD
          machine.inf         Not Available
          PCI\VEN_1022&DEV_1103&SUBSYS_00000000&REV_0
0\3&20FEA912&0&C3
AMD DRAM and HyperTransport(tm) Trace Mode
Configuration       Yes       SYSTEM    5.2.3790.1830
          10/1/2002 AMD       machine.inf         Not
Available
          PCI\VEN_1022&DEV_1102&SUBSYS_00000000&REV_0
0\3&20FEA912&0&C2
AMD Address Map Configuration Yes       SYSTEM
          5.2.3790.1830       10/1/2002 AMD
          machine.inf         Not Available
          PCI\VEN_1022&DEV_1101&SUBSYS_00000000&REV_0
0\3&20FEA912&0&C1
AMD HyperTransport(tm) Configuration    Yes
          SYSTEM    5.2.3790.1830       10/1/2002 AMD
          machine.inf         Not Available
          PCI\VEN_1022&DEV_1100&SUBSYS_00000000&REV_0
0\3&20FEA912&0&C0
AMD-8131 HyperTransport(tm) IOAPIC Controller     Yes
          SYSTEM    5.2.3790.1830       10/1/2002 AMD
          machine.inf         Not Available
          PCI\VEN_1022&DEV_7451&SUBSYS_00000000&REV_0
1\3&20FEA912&0&41
```


© 2005 Hewlett-Packard Company. All rights reserved.

```
Smart Array Logical Volume    No        DISKDRIVE
          5.6.2.32  7/14/2004 Hewlett-Packard
          oem2.inf  Not Available
          HPQCISS\DISK&VEN_HP&PROD_LOGICAL_VOLUME\6&1
E3DCC80&0&0000004000000000
Smart Array 6400 Controller U320 Expansion Module
(Non-Miniport)      No        SCSIADAPTER
          5.12.2.32 8/11/2004 Hewlett-Packard
          oem1.inf  Not Available
          PCI\VEN_0E11&DEV_0046&SUBSYS_409D0E11&REV_0
1\5&2363B0A8&0&284040
Smart Array Logical Volume    No        DISKDRIVE
          5.6.2.32  7/14/2004 Hewlett-Packard
          oem2.inf  Not Available
          HPQCISS\DISK&VEN_HP&PROD_LOGICAL_VOLUME\6&2
7E47DD0&0&0000004000000000
Smart Array 6400 Controller (Non-Miniport)        No
          SCSIADAPTER         5.12.2.32 8/11/2004
          Hewlett-Packard     oem1.inf  Not Available
          PCI\VEN_0E11&DEV_0046&SUBSYS_409C0E11&REV_0
1\5&2363B0A8&0&204040
PCI standard PCI-to-PCI bridge          Yes
          SYSTEM    5.2.3790.0          10/1/2002
          (Standard system devices)     machine.inf
          Not Available
          PCI\VEN_1014&DEV_01A7&SUBSYS_00000000&REV_0
2\4&24B9E852&0&4040
Smart Array Logical Volume    No        DISKDRIVE
          5.6.2.32  7/14/2004 Hewlett-Packard
          oem2.inf  Not Available
          HPQCISS\DISK&VEN_HP&PROD_LOGICAL_VOLUME\6&7
8F08CD&0&0100004000000000
Smart Array Logical Volume    No        DISKDRIVE
          5.6.2.32  7/14/2004 Hewlett-Packard
          oem2.inf  Not Available
          HPQCISS\DISK&VEN_HP&PROD_LOGICAL_VOLUME\6&7
8F08CD&0&0000004000000000
Smart Array 6400 Controller U320 Expansion Module
(Non-Miniport)      No        SCSIADAPTER
          5.12.2.32 8/11/2004 Hewlett-Packard
          oem1.inf  Not Available
          PCI\VEN_0E11&DEV_0046&SUBSYS_409D0E11&REV_0
1\5&2C344C1F&0&283840
Smart Array Logical Volume    No        DISKDRIVE
          5.6.2.32  7/14/2004 Hewlett-Packard
          oem2.inf  Not Available
          HPQCISS\DISK&VEN_HP&PROD_LOGICAL_VOLUME\6&5
F1DC7&0&0100004000000000
Smart Array Logical Volume    No        DISKDRIVE
          5.6.2.32  7/14/2004 Hewlett-Packard
          oem2.inf  Not Available
          HPQCISS\DISK&VEN_HP&PROD_LOGICAL_VOLUME\6&5
F1DC7&0&0000004000000000
Smart Array 6400 Controller (Non-Miniport)        No
          SCSIADAPTER         5.12.2.32 8/11/2004
          Hewlett-Packard     oem1.inf  Not Available
          PCI\VEN_0E11&DEV_0046&SUBSYS_409C0E11&REV_0
1\5&2C344C1F&0&203840
PCI standard PCI-to-PCI bridge          Yes
          SYSTEM    5.2.3790.0          10/1/2002
          (Standard system devices)     machine.inf
          Not Available
          PCI\VEN_1014&DEV_01A7&SUBSYS_00000000&REV_0
2\4&24B9E852&0&3840
PCI standard PCI-to-PCI bridge          Yes
          SYSTEM    5.2.3790.0          10/1/2002
          (Standard system devices)     machine.inf
          Not Available
          PCI\VEN_1022&DEV_7450&SUBSYS_00000000&REV_1
2\3&20FEA912&0&40
AMD-8131 HyperTransport(tm) IOAPIC Controller     Yes
          SYSTEM    5.2.3790.1830       10/1/2002 AMD
          machine.inf         Not Available
          PCI\VEN_1022&DEV_7451&SUBSYS_00000000&REV_0
1\3&20FEA912&0&39
HP NC7782 Gigabit Server Adapter        Yes       NET
          7.35.0.0  11/21/2003          Hewlett-
Packard Company     oem0.inf  Not Available
          PCI\VEN_14E4&DEV_1648&SUBSYS_00D00E11&REV_1
0\4&82820FC&0&3138
HP NC7782 Gigabit Server Adapter        Yes       NET
          7.35.0.0  11/21/2003          Hewlett-
Packard Company     oem0.inf  Not Available
          PCI\VEN_14E4&DEV_1648&SUBSYS_00D00E11&REV_1
0\4&82820FC&0&3038
Disk drive          Yes       DISKDRIVE 5.2.3790.0
          10/1/2002 (Standard disk drives)
          disk.inf  Not Available
          SCSI\DISK&VEN_COMPAQ&PROD_LOGICAL_VOLUME&RE
V_2.58\5&208597A6&0&040
Compaq Virtual LUN  Yes       SYSTEM    5.2.3790.0
          10/1/2002 Compaq    scsidev.inf         Not
Available
          SCSI\OTHER&VEN_COMPAQ&PROD_SCSI_COMMUNICATE
&REV_CISS\5&208597A6&0&000
Compaq Smart Array 5i Controller        Yes
          SCSIADAPTER         5.2.3790.0
          10/1/2002 Compaq    pnpscsi.inf         Not
Available
          PCI\VEN_0E11&DEV_B178&SUBSYS_40800E11&REV_0
1\4&82820FC&0&2038
PCI standard PCI-to-PCI bridge          Yes
          SYSTEM    5.2.3790.0          10/1/2002
          (Standard system devices)     machine.inf
          Not Available
          PCI\VEN_1022&DEV_7450&SUBSYS_00000000&REV_1
2\3&20FEA912&0&38
AMD-8111 System Management Controller   Yes
          SYSTEM    5.2.3790.0          10/1/2002 AMD
          machine.inf         Not Available
          PCI\VEN_1022&DEV_746B&SUBSYS_32050E11&REV_0
5\3&20FEA912&0&23
Secondary IDE Channel         Yes       HDC
          5.2.3790.0          10/1/2002 (Standard IDE
ATA/ATAPI controllers)        mshdc.inf Not Available
          PCIIDE\IDECHANNEL\4&21637DBD&0&1
CD-ROM Drive        Yes       CDROM     5.2.3790.0
          10/1/2002 (Standard CD-ROM drives)
          cdrom.inf Not Available
          IDE\CDROMTEAC_CD-
224E_____________________________9.9A____\5&2DC47F1C&0
&0.0.0
Primary IDE Channel Yes       HDC       5.2.3790.0
          10/1/2002 (Standard IDE ATA/ATAPI
controllers)        mshdc.inf Not Available
          PCIIDE\IDECHANNEL\4&21637DBD&0&0
Standard Dual Channel PCI IDE Controller          Yes
          HDC       5.2.3790.0          10/1/2002
          (Standard IDE ATA/ATAPI controllers)
          mshdc.inf Not Available
          PCI\VEN_1022&DEV_7469&SUBSYS_32040E11&REV_0
3\3&20FEA912&0&21
Floppy disk drive   Yes       FLOPPYDISK
          5.2.3790.0          10/1/2002 (Standard
floppy disk drives) flpydisk.inf        Not Available
          FDC\GENERIC_FLOPPY_DRIVE\6&2F72E85F&0&0
Standard floppy disk controller         Yes       FDC
          5.2.3790.0          10/1/2002 (Standard
floppy disk controllers)      fdc.inf   Not Available
          ACPI\PNP0700\5&1C430410&0
Communications Port Yes       PORTS     5.2.3790.0
          10/1/2002 (Standard port types)
          msports.inf         Not Available
          ACPI\PNP0501\0
Extended IO Bus     Yes       SYSTEM    5.2.3790.0
          10/1/2002 (Standard system devices)
          machine.inf         Not Available
          ACPI\PNP0A06\4&1C7DEDE8&0
PS/2 Compatible Mouse         Yes       MOUSE
          5.2.3790.0          10/1/2002 Microsoft
          msmouse.inf         Not Available
          ACPI\PNP0F13\4&1C7DEDE8&0
Standard 101/102-Key or Microsoft Natural PS/2
Keyboard  Yes       KEYBOARD  5.2.3790.0
          10/1/2002 (Standard keyboards)
          keyboard.inf        Not Available
          ACPI\PNP0303\4&1C7DEDE8&0
System speaker      Yes       SYSTEM    5.2.3790.0
          10/1/2002 (Standard system devices)
          machine.inf         Not Available
          ACPI\PNP0800\4&1C7DEDE8&0
Direct memory access controller         Yes
          SYSTEM    5.2.3790.0          10/1/2002
          (Standard system devices)     machine.inf
          Not Available
          ACPI\PNP0200\4&1C7DEDE8&0
System timer        Yes       SYSTEM    5.2.3790.0
          10/1/2002 (Standard system devices)
          machine.inf         Not Available
          ACPI\PNP0100\4&1C7DEDE8&0
Programmable interrupt controller       Yes
          SYSTEM    5.2.3790.0          10/1/2002
          (Standard system devices)     machine.inf
          Not Available
          ACPI\PNP0000\4&1C7DEDE8&0
Motherboard resources         Yes       SYSTEM
          5.2.3790.0          10/1/2002 (Standard
system devices)     machine.inf         Not Available
          ACPI\PNP0C02\0
ISAPNP Read Data Port         Yes       SYSTEM
          5.2.3790.0          10/1/2002 (Standard
system devices)     machine.inf         Not Available
          ISAPNP\READDATAPORT\0
PCI standard ISA bridge       Yes       SYSTEM
          5.2.3790.0          10/1/2002 (Standard
system devices)     machine.inf         Not Available
```


© 2005 Hewlett-Packard Company. All rights reserved.

```
          PCI\VEN_1022&DEV_7468&SUBSYS_00000000&REV_0
5\3&20FEA912&0&20
Plug and Play Monitor         Yes       MONITOR
          5.1.2001.0          6/6/2001  (Standard
monitor types)      monitor.inf         Not Available
          DISPLAY\AVO0000\5&38B1FFCB&0&80000001&01&03

RAGE XL PCI Family (Microsoft Corporation)        Yes
          DISPLAY   5.10.2600.6014      8/8/2001  ATI
Technologies Inc.   atiixpad.inf        Not Available
          PCI\VEN_1002&DEV_4752&SUBSYS_001E0E11&REV_2
7\4&12365AD0&0&1818
Base System Device  Not Available       UNKNOWN   Not
Available Not Available       Not Available       Not
Available Not Available
          PCI\VEN_0E11&DEV_B204&SUBSYS_B2060E11&REV_0
1\4&12365AD0&0&1218
Base System Device  Not Available       UNKNOWN   Not
Available Not Available       Not Available       Not
Available Not Available
          PCI\VEN_0E11&DEV_B203&SUBSYS_B2060E11&REV_0
1\4&12365AD0&0&1018
USB Root Hub        Yes       USB       5.2.3790.0
          10/1/2002 (Standard USB Host Controller)
          usbport.inf         Not Available
          USB\ROOT_HUB\5&194CD4CC&0
Standard OpenHCD USB Host Controller    Yes       USB
          5.2.3790.0          10/1/2002 (Standard USB
Host Controller)    usbport.inf         Not Available
          PCI\VEN_1022&DEV_7464&SUBSYS_32020E11&REV_0
B\4&12365AD0&0&0118
USB Root Hub        Yes       USB       5.2.3790.0
          10/1/2002 (Standard USB Host Controller)
          usbport.inf         Not Available
          USB\ROOT_HUB\5&9B4CD91&0
Standard OpenHCD USB Host Controller    Yes       USB
          5.2.3790.0          10/1/2002 (Standard USB
Host Controller)    usbport.inf         Not Available
          PCI\VEN_1022&DEV_7464&SUBSYS_32020E11&REV_0
B\4&12365AD0&0&0018
PCI standard PCI-to-PCI bridge          Yes
          SYSTEM    5.2.3790.0          10/1/2002
          (Standard system devices)     machine.inf
          Not Available
          PCI\VEN_1022&DEV_7460&SUBSYS_00000000&REV_0
7\3&20FEA912&0&18
PCI bus   Yes       SYSTEM    5.2.3790.0
          10/1/2002 (Standard system devices)
          machine.inf         Not Available
          ACPI\PNP0A03\7
Processor Yes       PROCESSOR 5.2.3790.1830
          10/1/2002 (Standard processor types)
          cpu.inf   Not Available
          ACPI\AUTHENTICAMD_-
_X86_FAMILY_15_MODEL_33\_7
Processor Yes       PROCESSOR 5.2.3790.1830
          10/1/2002 (Standard processor types)
          cpu.inf   Not Available
          ACPI\AUTHENTICAMD_-
_X86_FAMILY_15_MODEL_33\_6
Processor Yes       PROCESSOR 5.2.3790.1830
          10/1/2002 (Standard processor types)
          cpu.inf   Not Available
          ACPI\AUTHENTICAMD_-
_X86_FAMILY_15_MODEL_33\_5
Processor Yes       PROCESSOR 5.2.3790.1830
          10/1/2002 (Standard processor types)
          cpu.inf   Not Available
          ACPI\AUTHENTICAMD_-
_X86_FAMILY_15_MODEL_33\_4
Processor Yes       PROCESSOR 5.2.3790.1830
          10/1/2002 (Standard processor types)
          cpu.inf   Not Available
          ACPI\AUTHENTICAMD_-
_X86_FAMILY_15_MODEL_33\_3
Processor Yes       PROCESSOR 5.2.3790.1830
          10/1/2002 (Standard processor types)
          cpu.inf   Not Available
          ACPI\AUTHENTICAMD_-
_X86_FAMILY_15_MODEL_33\_2
Processor Yes       PROCESSOR 5.2.3790.1830
          10/1/2002 (Standard processor types)
          cpu.inf   Not Available
          ACPI\AUTHENTICAMD_-
_X86_FAMILY_15_MODEL_33\_1
Processor Yes       PROCESSOR 5.2.3790.1830
          10/1/2002 (Standard processor types)
          cpu.inf   Not Available
          ACPI\AUTHENTICAMD_-
_X86_FAMILY_15_MODEL_33\_0
Microsoft ACPI-Compliant System         Yes
          SYSTEM    5.2.3790.0          10/1/2002
          Microsoft acpi.inf  Not Available
          ACPI_HAL\PNP0C08\0
ACPI Multiprocessor PC        Yes       COMPUTER
          5.2.3790.0          10/1/2002 (Standard
computers)          hal.inf   Not Available
          ROOT\ACPI_HAL\0000
Not Available       Not Available       Not Available
          Not Available       Not Available       Not
Available Not Available       Not Available
          HTREE\ROOT\0

[Environment Variables]

Variable  Value     User Name
ComSpec   %SystemRoot%\system32\cmd.exe <SYSTEM>
Path
          %SystemRoot%\system32;%SystemRoot%;%SystemR
oot%\System32\Wbem;C:\Program Files\Microsoft SQL
Server\80\Tools\BINN          <SYSTEM>
windir    %SystemRoot%        <SYSTEM>
OS        Windows_NT          <SYSTEM>
PROCESSOR_ARCHITECTURE        x86       <SYSTEM>
PROCESSOR_LEVEL     15        <SYSTEM>
PROCESSOR_IDENTIFIER          x86 Family 15 Model 33
Stepping 0, AuthenticAMD      <SYSTEM>
PROCESSOR_REVISION  2100      <SYSTEM>
NUMBER_OF_PROCESSORS          8         <SYSTEM>
ClusterLog          C:\WINDOWS\Cluster\cluster.log
          <SYSTEM>
PATHEXT
          .COM;.EXE;.BAT;.CMD;.VBS;.VBE;.JS;.JSE;.WSF
;.WSH     <SYSTEM>
TEMP      %SystemRoot%\TEMP   <SYSTEM>
TMP       %SystemRoot%\TEMP   <SYSTEM>
FP_NO_HOST_CHECK    NO        <SYSTEM>
TEMP      %USERPROFILE%\Local Settings\Temp       NT
AUTHORITY\SYSTEM
TMP       %USERPROFILE%\Local Settings\Temp       NT
AUTHORITY\SYSTEM
TEMP      %USERPROFILE%\Local Settings\Temp       NT
AUTHORITY\LOCAL SERVICE
TMP       %USERPROFILE%\Local Settings\Temp       NT
AUTHORITY\LOCAL SERVICE
TEMP      %USERPROFILE%\Local Settings\Temp       NT
AUTHORITY\NETWORK SERVICE
TMP       %USERPROFILE%\Local Settings\Temp       NT
AUTHORITY\NETWORK SERVICE
TEMP      %USERPROFILE%\Local Settings\Temp
          TWIN\Administrator
TMP       %USERPROFILE%\Local Settings\Temp
          TWIN\Administrator

[Print Jobs]

Document  Size      Owner     Notify    Status
          Time Submitted      Start Time
          Until Time          Elapsed Time
          Pages Printed       Job ID    Priority
          Parameters          Driver    Print
Processor Host Print Queue    Data Type Name

[Network Connections]

Local Name          Remote Name         Type
          Status    User Name

[Running Tasks]

Name      Path      Process ID          Priority  Min
Working Set         Max Working Set     Start Time
          Version   Size      File Date
system idle process Not Available       0         0
          Not Available       Not Available       Not
Available Not Available       Not Available       Not
Available
system    Not Available       4         8         0
          1413120   Not Available       Not Available
          Not Available       Not Available
smss.exe  Not Available       1956      11
          204800    1413120   4/14/2005 4:03 PM   Not
Available Not Available       Not Available
csrss.exe Not Available       204       13        Not
Available Not Available       4/14/2005 4:03 PM   Not
Available Not Available       Not Available
winlogon.exe        c:\windows\system32\winlogon.exe
          256       13        204800    1413120
          4/14/2005 4:03 PM   5.2.3790.1830
(srv03_sp1_rtm.050324-1447)   497.00 KB (508,928
bytes)    4/5/2005 11:23 AM
services.exe        c:\windows\system32\services.exe
          340       9         204800    1413120
          4/14/2005 4:03 PM   5.2.3790.1830
(srv03_sp1_rtm.050324-1447)   107.50 KB (110,080
bytes)    3/25/2003 6:00 AM
lsass.exe c:\windows\system32\lsass.exe 360       9
          204800    1413120   4/14/2005 4:03 PM
          5.2.3790.0 (srv03_rtm.030324-2048)
```


© 2005 Hewlett-Packard Company. All rights reserved.

```
          13.00 KB (13,312 bytes)       3/25/2003
6:00 AM
svchost.exe         c:\windows\system32\svchost.exe
          584       8         204800    1413120
          4/14/2005 4:03 PM   5.2.3790.1830
(srv03_sp1_rtm.050324-1447)   14.00 KB (14,336 bytes)
          4/5/2005 11:23 AM
svchost.exe         Not Available       696       8
          Not Available       Not Available
          4/14/2005 4:03 PM   Not Available       Not
Available Not Available
svchost.exe         Not Available       760       8
          Not Available       Not Available
          4/14/2005 4:03 PM   Not Available       Not
Available Not Available
svchost.exe         Not Available       792       8
          Not Available       Not Available
          4/14/2005 4:03 PM   Not Available       Not
Available Not Available
svchost.exe         c:\windows\system32\svchost.exe
          844       8         204800    1413120
          4/14/2005 4:03 PM   5.2.3790.1830
(srv03_sp1_rtm.050324-1447)   14.00 KB (14,336 bytes)
          4/5/2005 11:23 AM
msdtc.exe Not Available       1196      8         Not
Available Not Available       4/14/2005 4:03 PM   Not
Available Not Available       Not Available
svchost.exe         c:\windows\system32\svchost.exe
          1440      8         204800    1413120
          4/14/2005 4:03 PM   5.2.3790.1830
(srv03_sp1_rtm.050324-1447)   14.00 KB (14,336 bytes)
          4/5/2005 11:23 AM
svchost.exe         c:\windows\system32\svchost.exe
          1876      8         204800    1413120
          4/14/2005 4:03 PM   5.2.3790.1830
(srv03_sp1_rtm.050324-1447)   14.00 KB (14,336 bytes)
          4/5/2005 11:23 AM
explorer.exe        c:\windows\explorer.exe
          1132      8         204800    1413120
          4/14/2005 4:03 PM   6.00.3790.1830
(srv03_sp1_rtm.050324-1447)   1.00 MB (1,050,624
bytes)    4/5/2005 11:23 AM
sqlmangr.exe        c:\program files\microsoft sql
server\80\tools\binn\sqlmangr.exe       1528      8
          204800    1413120   4/14/2005 4:04 PM
          2000.080.2026.00    80.00 KB (81,920 bytes)
          4/5/2005 11:52 AM
wmiprvse.exe        Not Available       772       8
          Not Available       Not Available
          4/14/2005 4:04 PM   Not Available       Not
Available Not Available
csrss.exe Not Available       452       13        Not
Available Not Available       4/18/2005 8:51 AM   Not
Available Not Available       Not Available
winlogon.exe        c:\windows\system32\winlogon.exe
          1588      13        204800    1413120
          4/18/2005 8:51 AM   5.2.3790.1830
(srv03_sp1_rtm.050324-1447)   497.00 KB (508,928
bytes)    4/5/2005 11:23 AM
rdpclip.exe         c:\windows\system32\rdpclip.exe
          2000      8         204800    1413120
          4/18/2005 8:51 AM   5.2.3790.1830
(srv03_sp1_rtm.050324-1447)   68.00 KB (69,632 bytes)
          4/5/2005 11:23 AM
explorer.exe        c:\windows\explorer.exe
          1428      8         204800    1413120
          4/18/2005 8:51 AM   6.00.3790.1830
(srv03_sp1_rtm.050324-1447)   1.00 MB (1,050,624
bytes)    4/5/2005 11:23 AM
sqlmangr.exe        c:\program files\microsoft sql
server\80\tools\binn\sqlmangr.exe       1744      8
          204800    1413120   4/18/2005 8:51 AM
          2000.080.2026.00    80.00 KB (81,920 bytes)
          4/5/2005 11:52 AM
helpctr.exe
          c:\windows\pchealth\helpctr\binaries\helpct
r.exe     1596      8         204800    1413120
          4/18/2005 2:48 PM   5.2.3790.1830
(srv03_sp1_rtm.050324-1447)   778.00 KB (796,672
bytes)    4/5/2005 11:23 AM
helpsvc.exe
          c:\windows\pchealth\helpctr\binaries\helpsv
c.exe     972       8         204800    1413120
          4/18/2005 2:48 PM   5.2.3790.1830
(srv03_sp1_rtm.050324-1447)   745.00 KB (762,880
bytes)    4/5/2005 11:23 AM
wmiprvse.exe        Not Available       1612      8
          Not Available       Not Available
          4/18/2005 2:48 PM   Not Available       Not
Available Not Available

[Loaded Modules]

Name      Version   Size      File Date Manufacturer
          Path
winlogon  5.2.3790.1830 (srv03_sp1_rtm.050324-1447)
          497.00 KB (508,928 bytes)     4/5/2005
11:23 AM  Microsoft Corporation
          c:\windows\system32\winlogon.exe
ntdll     5.2.3790.1830 (srv03_sp1_rtm.050324-1447)
          748.50 KB (766,464 bytes)     3/25/2003
6:00 AM   Microsoft Corporation
          c:\windows\system32\ntdll.dll
kernel32  5.2.3790.1830 (srv03_sp1_rtm.050324-1447)
          1,014.00 KB (1,038,336 bytes) 4/5/2005
11:23 AM  Microsoft Corporation
          c:\windows\system32\kernel32.dll
advapi32  5.2.3790.1830 (srv03_sp1_rtm.050324-1447)
          605.50 KB (620,032 bytes)     3/25/2003
6:00 AM   Microsoft Corporation
          c:\windows\system32\advapi32.dll
rpcrt4    5.2.3790.1830 (srv03_sp1_rtm.050324-1447)
          627.00 KB (642,048 bytes)     4/5/2005
11:23 AM  Microsoft Corporation
          c:\windows\system32\rpcrt4.dll
crypt32   5.131.3790.1830 (srv03_sp1_rtm.050324-1447)
          582.00 KB (595,968 bytes)     4/5/2005
11:23 AM  Microsoft Corporation
          c:\windows\system32\crypt32.dll
msasn1    5.2.3790.1830 (srv03_sp1_rtm.050324-1447)
          56.50 KB (57,856 bytes)       4/5/2005
11:23 AM  Microsoft Corporation
          c:\windows\system32\msasn1.dll
msvcrt    7.0.3790.1830 (srv03_sp1_rtm.050324-1447)
          340.50 KB (348,672 bytes)     4/5/2005
11:23 AM  Microsoft Corporation
          c:\windows\system32\msvcrt.dll
user32    5.2.3790.1830 (srv03_sp1_rtm.050324-1447)
          574.50 KB (588,288 bytes)     4/5/2005
11:23 AM  Microsoft Corporation
          c:\windows\system32\user32.dll
gdi32     5.2.3790.1830 (srv03_sp1_rtm.050324-1447)
          273.00 KB (279,552 bytes)     4/5/2005
11:23 AM  Microsoft Corporation
          c:\windows\system32\gdi32.dll
nddeapi   5.2.3790.0 (srv03_rtm.030324-2048)
          16.00 KB (16,384 bytes)       3/25/2003
6:00 AM   Microsoft Corporation
          c:\windows\system32\nddeapi.dll
profmap   5.2.3790.1830 (srv03_sp1_rtm.050324-1447)
          22.50 KB (23,040 bytes)       4/5/2005
11:23 AM  Microsoft Corporation
          c:\windows\system32\profmap.dll
netapi32  5.2.3790.1830 (srv03_sp1_rtm.050324-1447)
          341.50 KB (349,696 bytes)     4/5/2005
11:23 AM  Microsoft Corporation
          c:\windows\system32\netapi32.dll
userenv   5.2.3790.1830 (srv03_sp1_rtm.050324-1447)
          771.00 KB (789,504 bytes)     3/25/2003
6:00 AM   Microsoft Corporation
          c:\windows\system32\userenv.dll
psapi     5.2.3790.1830 (srv03_sp1_rtm.050324-1447)
          20.00 KB (20,480 bytes)       4/5/2005
11:23 AM  Microsoft Corporation
          c:\windows\system32\psapi.dll
regapi    5.2.3790.1830 (srv03_sp1_rtm.050324-1447)
          55.00 KB (56,320 bytes)       4/5/2005
11:23 AM  Microsoft Corporation
          c:\windows\system32\regapi.dll
secur32   5.2.3790.1830 (srv03_sp1_rtm.050324-1447)
          64.00 KB (65,536 bytes)       4/5/2005
11:23 AM  Microsoft Corporation
          c:\windows\system32\secur32.dll
setupapi  5.2.3790.1830 (srv03_sp1_rtm.050324-1447)
          1.03 MB (1,079,808 bytes)     3/25/2003
6:00 AM   Microsoft Corporation
          c:\windows\system32\setupapi.dll
version   5.2.3790.1830 (srv03_sp1_rtm.050324-1447)
          18.00 KB (18,432 bytes)       4/5/2005
11:23 AM  Microsoft Corporation
          c:\windows\system32\version.dll
winsta    5.2.3790.1830 (srv03_sp1_rtm.050324-1447)
          54.50 KB (55,808 bytes)       4/5/2005
11:23 AM  Microsoft Corporation
          c:\windows\system32\winsta.dll
ws2_32    5.2.3790.1830 (srv03_sp1_rtm.050324-1447)
          82.00 KB (83,968 bytes)       4/5/2005
11:23 AM  Microsoft Corporation
          c:\windows\system32\ws2_32.dll
ws2help   5.2.3790.1830 (srv03_sp1_rtm.050324-1447)
          19.50 KB (19,968 bytes)       4/5/2005
11:23 AM  Microsoft Corporation
          c:\windows\system32\ws2help.dll
msgina    5.2.3790.1830 (srv03_sp1_rtm.050324-1447)
          1.16 MB (1,211,904 bytes)     4/5/2005
11:23 AM  Microsoft Corporation
          c:\windows\system32\msgina.dll
```


© 2005 Hewlett-Packard Company. All rights reserved.

```
shsvcs    6.00.3790.1830 (srv03_sp1_rtm.050324-1447)
          131.50 KB (134,656 bytes)     4/5/2005
11:23 AM  Microsoft Corporation
          c:\windows\system32\shsvcs.dll
shlwapi   6.00.3790.1830 (srv03_sp1_rtm.050324-1447)
          313.50 KB (321,024 bytes)     4/5/2005
11:23 AM  Microsoft Corporation
          c:\windows\system32\shlwapi.dll
sfc       5.2.3790.0 (srv03_rtm.030324-2048)
          4.50 KB (4,608 bytes)         3/25/2003
6:00 AM   Microsoft Corporation
          c:\windows\system32\sfc.dll
sfc_os    5.2.3790.1830 (srv03_sp1_rtm.050324-1447)
          138.00 KB (141,312 bytes)     4/5/2005
11:23 AM  Microsoft Corporation
          c:\windows\system32\sfc_os.dll
wintrust  5.131.3790.1830 (srv03_sp1_rtm.050324-1447)
          162.00 KB (165,888 bytes)     4/5/2005
11:23 AM  Microsoft Corporation
          c:\windows\system32\wintrust.dll
imagehlp  5.2.3790.1830 (srv03_sp1_rtm.050324-1447)
          145.50 KB (148,992 bytes)     3/25/2003
6:00 AM   Microsoft Corporation
          c:\windows\system32\imagehlp.dll
ole32     5.2.3790.1830 (srv03_sp1_rtm.050324-1447)
          1.19 MB (1,245,184 bytes)     4/5/2005
11:23 AM  Microsoft Corporation
          c:\windows\system32\ole32.dll
comctl32  6.0 (srv03_sp1_rtm.050324-1447)
          1.00 MB (1,051,136 bytes)     3/24/2005
8:41 PM   Microsoft Corporation
          c:\windows\winsxs\x86_microsoft.windows.com
mon-controls_6595b64144ccf1df_6.0.3790.1830_x-
ww_7ae38ccf\comctl32.dll
winscard  5.2.3790.0 (srv03_rtm.030324-2048)
          98.50 KB (100,864 bytes)      3/25/2003
6:00 AM   Microsoft Corporation
          c:\windows\system32\winscard.dll
wtsapi32  5.2.3790.1830 (srv03_sp1_rtm.050324-1447)
          19.00 KB (19,456 bytes)       4/5/2005
11:23 AM  Microsoft Corporation
          c:\windows\system32\wtsapi32.dll
sxs       5.2.3790.1830 (srv03_sp1_rtm.050324-1447)
          743.50 KB (761,344 bytes)     4/5/2005
11:23 AM  Microsoft Corporation
          c:\windows\system32\sxs.dll
winmm     5.2.3790.1830 (srv03_sp1_rtm.050324-1447)
          172.50 KB (176,640 bytes)     4/5/2005
11:23 AM  Microsoft Corporation
          c:\windows\system32\winmm.dll
shell32   6.00.3790.1830 (srv03_sp1_rtm.050324-1447)
          7.99 MB (8,379,392 bytes)     4/5/2005
11:23 AM  Microsoft Corporation
          c:\windows\system32\shell32.dll
wldap32   5.2.3790.1830 (srv03_sp1_rtm.050324-1447)
          174.50 KB (178,688 bytes)     4/5/2005
11:23 AM  Microsoft Corporation
          c:\windows\system32\wldap32.dll
rsaenh    5.2.3790.1830 (srv03_sp1_rtm.050324-1447)
          183.98 KB (188,392 bytes)     4/5/2005
11:23 AM  Microsoft Corporation
          c:\windows\system32\rsaenh.dll
cscdll    5.2.3790.1830 (srv03_sp1_rtm.050324-1447)
          100.00 KB (102,400 bytes)     4/5/2005
11:23 AM  Microsoft Corporation
          c:\windows\system32\cscdll.dll
dimsntfy  5.2.3790.1830 (srv03_sp1_rtm.050324-1447)
          19.00 KB (19,456 bytes)       4/5/2005
11:24 AM  Microsoft Corporation
          c:\windows\system32\dimsntfy.dll
wlnotify  5.2.3790.1830 (srv03_sp1_rtm.050324-1447)
          94.50 KB (96,768 bytes)       4/5/2005
11:23 AM  Microsoft Corporation
          c:\windows\system32\wlnotify.dll
mpr       5.2.3790.0 (srv03_rtm.030324-2048)
          56.00 KB (57,344 bytes)       3/25/2003
6:00 AM   Microsoft Corporation
          c:\windows\system32\mpr.dll
oleaut32  5.2.3790.1830       543.00 KB (556,032
bytes)    3/25/2003 6:00 AM   Microsoft Corporation
          c:\windows\system32\oleaut32.dll
winspool  5.2.3790.1830 (srv03_sp1_rtm.050324-1447)
          147.00 KB (150,528 bytes)     3/25/2003
6:00 AM   Microsoft Corporation
          c:\windows\system32\winspool.drv
comctl32  5.82 (srv03_sp1_rtm.050324-1447)
          585.00 KB (599,040 bytes)     3/24/2005
8:41 PM   Microsoft Corporation
          c:\windows\winsxs\x86_microsoft.windows.com
mon-controls_6595b64144ccf1df_5.82.3790.1830_x-
ww_1b6f474a\comctl32.dll
uxtheme   6.00.3790.1830 (srv03_sp1_rtm.050324-1447)
          202.00 KB (206,848 bytes)     4/5/2005
11:23 AM  Microsoft Corporation
          c:\windows\system32\uxtheme.dll
samlib    5.2.3790.1830 (srv03_sp1_rtm.050324-1447)
          46.50 KB (47,616 bytes)       3/25/2003
6:00 AM   Microsoft Corporation
          c:\windows\system32\samlib.dll
cscui     5.2.3790.1830 (srv03_sp1_rtm.050324-1447)
          319.50 KB (327,168 bytes)     4/5/2005
11:23 AM  Microsoft Corporation
          c:\windows\system32\cscui.dll
clbcatq   2001.12.4720.1830 (srv03_sp1_rtm.050324-
1447)     502.50 KB (514,560 bytes)     4/5/2005
11:23 AM  Microsoft Corporation
          c:\windows\system32\clbcatq.dll
comres    2001.12.4720.0 (srv03_rtm.030324-2048)
          778.00 KB (796,672 bytes)     3/25/2003
6:00 AM   Microsoft Corporation
          c:\windows\system32\comres.dll
ntmarta   5.2.3790.1830 (srv03_sp1_rtm.050324-1447)
          120.50 KB (123,392 bytes)     4/5/2005
11:23 AM  Microsoft Corporation
          c:\windows\system32\ntmarta.dll
xpsp2res  5.2.3790.1830 (srv03_sp1_rtm.050324-1447)
          2.76 MB (2,897,920 bytes)     4/5/2005
11:24 AM  Microsoft Corporation
          c:\windows\system32\xpsp2res.dll
wbemprox  5.2.3790.1830 (srv03_sp1_rtm.050324-1447)
          20.50 KB (20,992 bytes)       4/5/2005
11:23 AM  Microsoft Corporation
          c:\windows\system32\wbem\wbemprox.dll
wbemcomn  5.2.3790.1830 (srv03_sp1_rtm.050324-1447)
          221.00 KB (226,304 bytes)     4/5/2005
11:23 AM  Microsoft Corporation
          c:\windows\system32\wbem\wbemcomn.dll
wbemsvc   5.2.3790.0 (srv03_rtm.030324-2048)
          42.50 KB (43,520 bytes)       4/5/2005
10:58 AM  Microsoft Corporation
          c:\windows\system32\wbem\wbemsvc.dll
fastprox  5.2.3790.1830 (srv03_sp1_rtm.050324-1447)
          471.00 KB (482,304 bytes)     4/5/2005
11:23 AM  Microsoft Corporation
          c:\windows\system32\wbem\fastprox.dll
msvcp60   6.05.2144.0         388.00 KB (397,312
bytes)    3/25/2003 6:00 AM   Microsoft Corporation
          c:\windows\system32\msvcp60.dll
ntdsapi   5.2.3790.1830 (srv03_sp1_rtm.050324-1447)
          71.00 KB (72,704 bytes)       4/5/2005
11:23 AM  Microsoft Corporation
          c:\windows\system32\ntdsapi.dll
dnsapi    5.2.3790.1830 (srv03_sp1_rtm.050324-1447)
          153.50 KB (157,184 bytes)     4/5/2005
11:23 AM  Microsoft Corporation
          c:\windows\system32\dnsapi.dll
services  5.2.3790.1830 (srv03_sp1_rtm.050324-1447)
          107.50 KB (110,080 bytes)     3/25/2003
6:00 AM   Microsoft Corporation
          c:\windows\system32\services.exe
ncobjapi  5.2.3790.1830 (srv03_sp1_rtm.050324-1447)
          36.00 KB (36,864 bytes)       4/5/2005
11:23 AM  Microsoft Corporation
          c:\windows\system32\ncobjapi.dll
scesrv    5.2.3790.1830 (srv03_sp1_rtm.050324-1447)
          327.00 KB (334,848 bytes)     4/5/2005
11:23 AM  Microsoft Corporation
          c:\windows\system32\scesrv.dll
authz     5.2.3790.1830 (srv03_sp1_rtm.050324-1447)
          66.50 KB (68,096 bytes)       4/5/2005
11:23 AM  Microsoft Corporation
          c:\windows\system32\authz.dll
umpnpmgr  5.2.3790.1830 (srv03_sp1_rtm.050324-1447)
          126.50 KB (129,536 bytes)     4/5/2005
11:23 AM  Microsoft Corporation
          c:\windows\system32\umpnpmgr.dll
eventlog  5.2.3790.1830 (srv03_sp1_rtm.050324-1447)
          67.50 KB (69,120 bytes)       4/5/2005
11:23 AM  Microsoft Corporation
          c:\windows\system32\eventlog.dll
lsass     5.2.3790.0 (srv03_rtm.030324-2048)
          13.00 KB (13,312 bytes)       3/25/2003
6:00 AM   Microsoft Corporation
          c:\windows\system32\lsass.exe
lsasrv    5.2.3790.1830 (srv03_sp1_rtm.050324-1447)
          803.00 KB (822,272 bytes)     3/25/2003
6:00 AM   Microsoft Corporation
          c:\windows\system32\lsasrv.dll
samsrv    5.2.3790.1830 (srv03_sp1_rtm.050324-1447)
          450.50 KB (461,312 bytes)     3/25/2003
6:00 AM   Microsoft Corporation
          c:\windows\system32\samsrv.dll
cryptdll  5.2.3790.1830 (srv03_sp1_rtm.050324-1447)
          32.00 KB (32,768 bytes)       4/5/2005
11:23 AM  Microsoft Corporation
          c:\windows\system32\cryptdll.dll
msprivs   5.2.3790.0 (srv03_rtm.030324-2048)
          46.50 KB (47,616 bytes)       3/25/2003
```


© 2005 Hewlett-Packard Company. All rights reserved.

```
6:00 AM   Microsoft Corporation
          c:\windows\system32\msprivs.dll
kerberos  5.2.3790.1830 (srv03_sp1_rtm.050324-1447)
          340.50 KB (348,672 bytes)     4/5/2005
11:23 AM  Microsoft Corporation
          c:\windows\system32\kerberos.dll
msv1_0    5.2.3790.1830 (srv03_sp1_rtm.050324-1447)
          141.00 KB (144,384 bytes)     4/5/2005
11:23 AM  Microsoft Corporation
          c:\windows\system32\msv1_0.dll
iphlpapi  5.2.3790.1830 (srv03_sp1_rtm.050324-1447)
          92.50 KB (94,720 bytes)       4/5/2005
11:23 AM  Microsoft Corporation
          c:\windows\system32\iphlpapi.dll
netlogon  5.2.3790.1830 (srv03_sp1_rtm.050324-1447)
          409.50 KB (419,328 bytes)     4/5/2005
11:23 AM  Microsoft Corporation
          c:\windows\system32\netlogon.dll
w32time   5.2.3790.1830 (srv03_sp1_rtm.050324-1447)
          222.00 KB (227,328 bytes)     4/5/2005
11:23 AM  Microsoft Corporation
          c:\windows\system32\w32time.dll
schannel  5.2.3790.1830 (srv03_sp1_rtm.050324-1447)
          141.00 KB (144,384 bytes)     4/5/2005
11:23 AM  Microsoft Corporation
          c:\windows\system32\schannel.dll
wdigest   5.2.3790.1830 (srv03_sp1_rtm.050324-1447)
          74.00 KB (75,776 bytes)       4/5/2005
11:23 AM  Microsoft Corporation
          c:\windows\system32\wdigest.dll
rassfm    5.2.3790.1830 (srv03_sp1_rtm.050324-1447)
          23.00 KB (23,552 bytes)       4/5/2005
11:23 AM  Microsoft Corporation
          c:\windows\system32\rassfm.dll
kdcsvc    5.2.3790.1830 (srv03_sp1_rtm.050324-1447)
          213.50 KB (218,624 bytes)     4/5/2005
11:23 AM  Microsoft Corporation
          c:\windows\system32\kdcsvc.dll
ntdsa     5.2.3790.1830 (srv03_sp1_rtm.050324-1447)
          1.45 MB (1,516,032 bytes)     4/5/2005
11:23 AM  Microsoft Corporation
          c:\windows\system32\ntdsa.dll
esent     5.2.3790.1830 (srv03_sp1_rtm.050324-1447)
          1,022.50 KB (1,047,040 bytes) 4/5/2005
11:23 AM  Microsoft Corporation
          c:\windows\system32\esent.dll
ntdsatq   5.2.3790.1830 (srv03_sp1_rtm.050324-1447)
          29.50 KB (30,208 bytes)       4/5/2005
11:23 AM  Microsoft Corporation
          c:\windows\system32\ntdsatq.dll
mswsock   5.2.3790.1830 (srv03_sp1_rtm.050324-1447)
          250.50 KB (256,512 bytes)     4/5/2005
11:23 AM  Microsoft Corporation
          c:\windows\system32\mswsock.dll
scecli    5.2.3790.1830 (srv03_sp1_rtm.050324-1447)
          186.50 KB (190,976 bytes)     4/5/2005
11:23 AM  Microsoft Corporation
          c:\windows\system32\scecli.dll
ws03res   5.2.3790.1830 (srv03_sp1_rtm.050324-1447)
          793.50 KB (812,544 bytes)     4/5/2005
11:24 AM  Microsoft Corporation
          c:\windows\system32\ws03res.dll
hnetcfg   5.2.3790.1830 (srv03_sp1_rtm.050324-1447)
          343.50 KB (351,744 bytes)     4/5/2005
11:23 AM  Microsoft Corporation
          c:\windows\system32\hnetcfg.dll
wshtcpip  5.2.3790.0 (srv03_rtm.030324-2048)
          18.00 KB (18,432 bytes)       3/25/2003
6:00 AM   Microsoft Corporation
          c:\windows\system32\wshtcpip.dll
ipsecsvc  5.2.3790.1830 (srv03_sp1_rtm.050324-1447)
          180.50 KB (184,832 bytes)     4/5/2005
11:23 AM  Microsoft Corporation
          c:\windows\system32\ipsecsvc.dll
oakley    5.2.3790.1830 (srv03_sp1_rtm.050324-1447)
          264.00 KB (270,336 bytes)     4/5/2005
11:23 AM  Microsoft Corporation
          c:\windows\system32\oakley.dll
winipsec  5.2.3790.1830 (srv03_sp1_rtm.050324-1447)
          35.50 KB (36,352 bytes)       4/5/2005
11:23 AM  Microsoft Corporation
          c:\windows\system32\winipsec.dll
pstorsvc  5.2.3790.0 (srv03_rtm.030324-2048)
          24.00 KB (24,576 bytes)       3/25/2003
6:00 AM   Microsoft Corporation
          c:\windows\system32\pstorsvc.dll
psbase    5.2.3790.1830 (srv03_sp1_rtm.050324-1447)
          84.00 KB (86,016 bytes)       4/5/2005
11:23 AM  Microsoft Corporation
          c:\windows\system32\psbase.dll
dssenh    5.2.3790.1830 (srv03_sp1_rtm.050324-1447)
          139.98 KB (143,336 bytes)     4/5/2005
11:23 AM  Microsoft Corporation
          c:\windows\system32\dssenh.dll
wlbsctrl  5.2.3790.1830 (srv03_sp1_rtm.050324-1447)
          82.00 KB (83,968 bytes)       4/5/2005
11:23 AM  Microsoft Corporation
          c:\windows\system32\wlbsctrl.dll
svchost   5.2.3790.1830 (srv03_sp1_rtm.050324-1447)
          14.00 KB (14,336 bytes)       4/5/2005
11:23 AM  Microsoft Corporation
          c:\windows\system32\svchost.exe
rpcss     5.2.3790.1830 (srv03_sp1_rtm.050324-1447)
          406.00 KB (415,744 bytes)     4/5/2005
11:23 AM  Microsoft Corporation
          c:\windows\system32\rpcss.dll
wkssvc    5.2.3790.1830 (srv03_sp1_rtm.050324-1447)
          130.00 KB (133,120 bytes)     3/25/2003
6:00 AM   Microsoft Corporation
          c:\windows\system32\wkssvc.dll
wiarpc    5.2.3790.1830 (srv03_sp1_rtm.050324-1447)
          32.50 KB (33,280 bytes)       4/5/2005
11:23 AM  Microsoft Corporation
          c:\windows\system32\wiarpc.dll
aelupsvc  5.2.3790.1830 (srv03_sp1_rtm.050324-1447)
          26.00 KB (26,624 bytes)       4/5/2005
11:24 AM  Microsoft Corporation
          c:\windows\system32\aelupsvc.dll
apphelp   5.2.3790.1830 (srv03_sp1_rtm.050324-1447)
          146.50 KB (150,016 bytes)     4/5/2005
11:23 AM  Microsoft Corporation
          c:\windows\system32\apphelp.dll
cryptsvc  5.2.3790.1830 (srv03_sp1_rtm.050324-1447)
          55.50 KB (56,832 bytes)       4/5/2005
11:23 AM  Microsoft Corporation
          c:\windows\system32\cryptsvc.dll
certcli   5.2.3790.1830 (srv03_sp1_rtm.050324-1447)
          227.00 KB (232,448 bytes)     4/5/2005
11:23 AM  Microsoft Corporation
          c:\windows\system32\certcli.dll
atl       3.05.2283 83.00 KB (84,992 bytes)
          3/25/2003 6:00 AM   Microsoft Corporation
          c:\windows\system32\atl.dll
vssapi    5.2.3790.1830 (srv03_sp1_rtm.050324-1447)
          548.00 KB (561,152 bytes)     4/5/2005
11:23 AM  Microsoft Corporation
          c:\windows\system32\vssapi.dll
dmserver  5.2.3790.1830 (srv03_sp1_rtm.050324-1447)
          25.50 KB (26,112 bytes)       4/5/2005
11:23 AM  Microsoft Corporation
          c:\windows\system32\dmserver.dll
es        2001.12.4720.1830 (srv03_sp1_rtm.050324-
1447)     233.00 KB (238,592 bytes)     4/5/2005
11:23 AM  Microsoft Corporation
          c:\windows\system32\es.dll
srvsvc    5.2.3790.1830 (srv03_sp1_rtm.050324-1447)
          93.50 KB (95,744 bytes)       3/25/2003
6:00 AM   Microsoft Corporation
          c:\windows\system32\srvsvc.dll
wmisvc    5.2.3790.1830 (srv03_sp1_rtm.050324-1447)
          140.00 KB (143,360 bytes)     4/5/2005
11:23 AM  Microsoft Corporation
          c:\windows\system32\wbem\wmisvc.dll
sens      5.2.3790.1830 (srv03_sp1_rtm.050324-1447)
          36.50 KB (37,376 bytes)       4/5/2005
11:23 AM  Microsoft Corporation
          c:\windows\system32\sens.dll
comsvcs   2001.12.4720.1830 (srv03_sp1_rtm.050324-
1447)     1.19 MB (1,248,256 bytes)     4/5/2005
11:23 AM  Microsoft Corporation
          c:\windows\system32\comsvcs.dll
browser   5.2.3790.1830 (srv03_sp1_rtm.050324-1447)
          76.50 KB (78,336 bytes)       4/5/2005
11:23 AM  Microsoft Corporation
          c:\windows\system32\browser.dll
netrap    5.2.3790.0 (srv03_rtm.030324-2048)
          11.50 KB (11,776 bytes)       3/25/2003
6:00 AM   Microsoft Corporation
          c:\windows\system32\netrap.dll
mprapi    5.2.3790.1830 (srv03_sp1_rtm.050324-1447)
          89.00 KB (91,136 bytes)       4/5/2005
11:23 AM  Microsoft Corporation
          c:\windows\system32\mprapi.dll
activeds  5.2.3790.1830 (srv03_sp1_rtm.050324-1447)
          194.00 KB (198,656 bytes)     4/5/2005
11:23 AM  Microsoft Corporation
          c:\windows\system32\activeds.dll
adsldpc   5.2.3790.1830 (srv03_sp1_rtm.050324-1447)
          146.00 KB (149,504 bytes)     4/5/2005
11:23 AM  Microsoft Corporation
          c:\windows\system32\adsldpc.dll
credui    5.2.3790.1830 (srv03_sp1_rtm.050324-1447)
          162.00 KB (165,888 bytes)     4/5/2005
11:23 AM  Microsoft Corporation
          c:\windows\system32\credui.dll
rtutils   5.2.3790.1830 (srv03_sp1_rtm.050324-1447)
          34.50 KB (35,328 bytes)       4/5/2005
```


© 2005 Hewlett-Packard Company. All rights reserved.

```
11:23 AM  Microsoft Corporation
          c:\windows\system32\rtutils.dll
netman    5.2.3790.1830 (srv03_sp1_rtm.050324-1447)
          258.50 KB (264,704 bytes)     4/5/2005
11:23 AM  Microsoft Corporation
          c:\windows\system32\netman.dll
netshell  5.2.3790.1830 (srv03_sp1_rtm.050324-1447)
          1.73 MB (1,812,992 bytes)     4/5/2005
11:23 AM  Microsoft Corporation
          c:\windows\system32\netshell.dll
clusapi   5.2.3790.1830 (srv03_sp1_rtm.050324-1447)
          60.00 KB (61,440 bytes)       4/5/2005
11:23 AM  Microsoft Corporation
          c:\windows\system32\clusapi.dll
rasapi32  5.2.3790.1830 (srv03_sp1_rtm.050324-1447)
          239.50 KB (245,248 bytes)     3/25/2003
6:00 AM   Microsoft Corporation
          c:\windows\system32\rasapi32.dll
rasman    5.2.3790.1830 (srv03_sp1_rtm.050324-1447)
          61.50 KB (62,976 bytes)       3/25/2003
6:00 AM   Microsoft Corporation
          c:\windows\system32\rasman.dll
tapi32    5.2.3790.1830 (srv03_sp1_rtm.050324-1447)
          179.50 KB (183,808 bytes)     4/5/2005
11:23 AM  Microsoft Corporation
          c:\windows\system32\tapi32.dll
wininet   6.00.3790.1830 (srv03_sp1_rtm.050324-1447)
          646.00 KB (661,504 bytes)     4/5/2005
11:23 AM  Microsoft Corporation
          c:\windows\system32\wininet.dll
wzcsapi   5.2.3790.1830 (srv03_sp1_rtm.050324-1447)
          41.00 KB (41,984 bytes)       4/5/2005
11:23 AM  Microsoft Corporation
          c:\windows\system32\wzcsapi.dll
wzcsvc    5.2.3790.1830 (srv03_sp1_rtm.050324-1447)
          364.50 KB (373,248 bytes)     4/5/2005
11:23 AM  Microsoft Corporation
          c:\windows\system32\wzcsvc.dll
wmi       5.2.3790.0 (srv03_rtm.030324-2048)
          6.50 KB (6,656 bytes)         3/25/2003
6:00 AM   Microsoft Corporation
          c:\windows\system32\wmi.dll
dhcpcsvc  5.2.3790.1830 (srv03_sp1_rtm.050324-1447)
          113.50 KB (116,224 bytes)     3/25/2003
6:00 AM   Microsoft Corporation
          c:\windows\system32\dhcpcsvc.dll
wbemcore  5.2.3790.1830 (srv03_sp1_rtm.050324-1447)
          497.50 KB (509,440 bytes)     4/5/2005
11:23 AM  Microsoft Corporation
          c:\windows\system32\wbem\wbemcore.dll
esscli    5.2.3790.1830 (srv03_sp1_rtm.050324-1447)
          250.00 KB (256,000 bytes)     4/5/2005
11:23 AM  Microsoft Corporation
          c:\windows\system32\wbem\esscli.dll
wmiutils  5.2.3790.1830 (srv03_sp1_rtm.050324-1447)
          93.50 KB (95,744 bytes)       4/5/2005
11:23 AM  Microsoft Corporation
          c:\windows\system32\wbem\wmiutils.dll
repdrvfs  5.2.3790.1830 (srv03_sp1_rtm.050324-1447)
          172.50 KB (176,640 bytes)     4/5/2005
11:23 AM  Microsoft Corporation
          c:\windows\system32\wbem\repdrvfs.dll
wmiprvsd  5.2.3790.1830 (srv03_sp1_rtm.050324-1447)
          404.00 KB (413,696 bytes)     4/5/2005
11:23 AM  Microsoft Corporation
          c:\windows\system32\wbem\wmiprvsd.dll
wbemess   5.2.3790.1830 (srv03_sp1_rtm.050324-1447)
          271.50 KB (278,016 bytes)     4/5/2005
11:23 AM  Microsoft Corporation
          c:\windows\system32\wbem\wbemess.dll
rasdlg    5.2.3790.1830 (srv03_sp1_rtm.050324-1447)
          663.00 KB (678,912 bytes)     3/25/2003
6:00 AM   Microsoft Corporation
          c:\windows\system32\rasdlg.dll
rasadhlp  5.2.3790.1830 (srv03_sp1_rtm.050324-1447)
          7.50 KB (7,680 bytes)         4/5/2005
11:23 AM  Microsoft Corporation
          c:\windows\system32\rasadhlp.dll
ncprov    5.2.3790.1830 (srv03_sp1_rtm.050324-1447)
          46.50 KB (47,616 bytes)       4/5/2005
11:23 AM  Microsoft Corporation
          c:\windows\system32\wbem\ncprov.dll
appmgmts  5.2.3790.1830 (srv03_sp1_rtm.050324-1447)
          170.00 KB (174,080 bytes)     4/5/2005
11:23 AM  Microsoft Corporation
          c:\windows\system32\appmgmts.dll
xactsrv   5.2.3790.1830 (srv03_sp1_rtm.050324-1447)
          90.00 KB (92,160 bytes)       4/5/2005
11:23 AM  Microsoft Corporation
          c:\windows\system32\xactsrv.dll
ntlsapi   5.2.3790.0 (srv03_rtm.030324-2048)
          8.00 KB (8,192 bytes)         3/25/2003
6:00 AM   Microsoft Corporation
          c:\windows\system32\ntlsapi.dll
pchsvc    5.2.3790.1830 (srv03_sp1_rtm.050324-1447)
          39.00 KB (39,936 bytes)       4/5/2005
11:23 AM  Microsoft Corporation
          c:\windows\pchealth\helpctr\binaries\pchsvc
.dll
wbemcons  5.2.3790.1830 (srv03_sp1_rtm.050324-1447)
          45.50 KB (46,592 bytes)       4/5/2005
11:23 AM  Microsoft Corporation
          c:\windows\system32\wbem\wbemcons.dll
ersvc     5.2.3790.1830 (srv03_sp1_rtm.050324-1447)
          24.00 KB (24,576 bytes)       4/5/2005
11:23 AM  Microsoft Corporation
          c:\windows\system32\ersvc.dll
termsrv   5.2.3790.1830 (srv03_sp1_rtm.050324-1447)
          239.00 KB (244,736 bytes)     4/5/2005
11:23 AM  Microsoft Corporation
          c:\windows\system32\termsrv.dll
icaapi    5.2.3790.1830 (srv03_sp1_rtm.050324-1447)
          12.50 KB (12,800 bytes)       4/5/2005
11:23 AM  Microsoft Corporation
          c:\windows\system32\icaapi.dll
mstlsapi  5.2.3790.1830 (srv03_sp1_rtm.050324-1447)
          116.00 KB (118,784 bytes)     4/5/2005
11:23 AM  Microsoft Corporation
          c:\windows\system32\mstlsapi.dll
rdpwsx    5.2.3790.1830 (srv03_sp1_rtm.050324-1447)
          101.63 KB (104,072 bytes)     4/5/2005
11:23 AM  Microsoft Corporation
          c:\windows\system32\rdpwsx.dll
explorer  6.00.3790.1830 (srv03_sp1_rtm.050324-1447)
          1.00 MB (1,050,624 bytes)     4/5/2005
11:23 AM  Microsoft Corporation
          c:\windows\explorer.exe
browseui  6.00.3790.1830 (srv03_sp1_rtm.050324-1447)
          1,009.00 KB (1,033,216 bytes) 4/5/2005
11:23 AM  Microsoft Corporation
          c:\windows\system32\browseui.dll
shdocvw   6.00.3790.1830 (srv03_sp1_rtm.050324-1447)
          1.43 MB (1,502,720 bytes)     4/5/2005
11:23 AM  Microsoft Corporation
          c:\windows\system32\shdocvw.dll
cryptui   5.131.3790.1830 (srv03_sp1_rtm.050324-1447)
          496.50 KB (508,416 bytes)     4/5/2005
11:23 AM  Microsoft Corporation
          c:\windows\system32\cryptui.dll
themeui   6.00.3790.1830 (srv03_sp1_rtm.050324-1447)
          377.50 KB (386,560 bytes)     4/5/2005
11:23 AM  Microsoft Corporation
          c:\windows\system32\themeui.dll
msimg32   5.2.3790.0 (srv03_rtm.030324-2048)
          4.50 KB (4,608 bytes)         3/25/2003
6:00 AM   Microsoft Corporation
          c:\windows\system32\msimg32.dll
linkinfo  5.2.3790.1830 (srv03_sp1_rtm.050324-1447)
          19.00 KB (19,456 bytes)       4/5/2005
11:23 AM  Microsoft Corporation
          c:\windows\system32\linkinfo.dll
ntshrui   6.00.3790.1830 (srv03_sp1_rtm.050324-1447)
          140.00 KB (143,360 bytes)     4/5/2005
11:23 AM  Microsoft Corporation
          c:\windows\system32\ntshrui.dll
urlmon    6.00.3790.1830 (srv03_sp1_rtm.050324-1447)
          673.00 KB (689,152 bytes)     4/5/2005
11:23 AM  Microsoft Corporation
          c:\windows\system32\urlmon.dll
webcheck  6.00.3790.1830 (srv03_sp1_rtm.050324-1447)
          272.50 KB (279,040 bytes)     4/5/2005
11:23 AM  Microsoft Corporation
          c:\windows\system32\webcheck.dll
wsock32   5.2.3790.0 (srv03_rtm.030324-2048)
          22.00 KB (22,528 bytes)       3/25/2003
6:00 AM   Microsoft Corporation
          c:\windows\system32\wsock32.dll
stobject  5.2.3790.1830 (srv03_sp1_rtm.050324-1447)
          120.50 KB (123,392 bytes)     4/5/2005
11:23 AM  Microsoft Corporation
          c:\windows\system32\stobject.dll
batmeter  6.00.3790.1830 (srv03_sp1_rtm.050324-1447)
          31.50 KB (32,256 bytes)       4/5/2005
11:23 AM  Microsoft Corporation
          c:\windows\system32\batmeter.dll
powrprof  6.00.3790.1830 (srv03_sp1_rtm.050324-1447)
          16.50 KB (16,896 bytes)       4/5/2005
11:23 AM  Microsoft Corporation
          c:\windows\system32\powrprof.dll
browselc  6.00.3790.0 (srv03_rtm.030324-2048)
          62.00 KB (63,488 bytes)       3/25/2003
6:00 AM   Microsoft Corporation
          c:\windows\system32\browselc.dll
drprov    5.2.3790.1830 (srv03_sp1_rtm.050324-1447)
          14.00 KB (14,336 bytes)       4/5/2005
11:23 AM  Microsoft Corporation
          c:\windows\system32\drprov.dll
```


© 2005 Hewlett-Packard Company. All rights reserved.

```
ntlanman  5.2.3790.1830 (srv03_sp1_rtm.050324-1447)
          43.50 KB (44,544 bytes)       4/5/2005
11:23 AM  Microsoft Corporation
          c:\windows\system32\ntlanman.dll
netui0    5.2.3790.0 (srv03_rtm.030324-2048)
          75.50 KB (77,312 bytes)       3/25/2003
6:00 AM   Microsoft Corporation
          c:\windows\system32\netui0.dll
netui1    5.2.3790.0 (srv03_rtm.030324-2048)
          184.00 KB (188,416 bytes)     3/25/2003
6:00 AM   Microsoft Corporation
          c:\windows\system32\netui1.dll
davclnt   5.2.3790.0 (srv03_rtm.030324-2048)
          23.50 KB (24,064 bytes)       3/25/2003
6:00 AM   Microsoft Corporation
          c:\windows\system32\davclnt.dll
mlang     6.00.3790.1830 (srv03_sp1_rtm.050324-1447)
          577.50 KB (591,360 bytes)     4/5/2005
11:23 AM  Microsoft Corporation
          c:\windows\system32\mlang.dll
shdoclc   6.00.3790.0 (srv03_rtm.030324-2048)
          588.50 KB (602,624 bytes)     3/25/2003
6:00 AM   Microsoft Corporation
          c:\windows\system32\shdoclc.dll
sqlmangr  2000.080.2026.00    80.00 KB (81,920 bytes)
          4/5/2005 11:52 AM   Microsoft Corporation
          c:\program files\microsoft sql
server\80\tools\binn\sqlmangr.exe
sqlunirl  2000.080.0728.00    176.56 KB (180,800
bytes)    4/5/2005 11:23 AM   Microsoft Corporation
          c:\windows\system32\sqlunirl.dll
comdlg32  6.00.3790.1830 (srv03_sp1_rtm.050324-1447)
          274.50 KB (281,088 bytes)     3/25/2003
6:00 AM   Microsoft Corporation
          c:\windows\system32\comdlg32.dll
msvcr71   7.10.3052.4         340.00 KB (348,160
bytes)    4/5/2005 12:28 PM   Microsoft Corporation
          c:\windows\system32\msvcr71.dll
w95scm    2000.080.2026.00    41.00 KB (41,984 bytes)
          4/5/2005 11:52 AM   Microsoft Corporation
          c:\program files\microsoft sql
server\80\tools\binn\w95scm.dll
odbc32    3.526.1830.0 (srv03_sp1_rtm.050324-1447)
          240.00 KB (245,760 bytes)     4/5/2005
11:23 AM  Microsoft Corporation
          c:\windows\system32\odbc32.dll
sqlsvc    2000.080.2026.00    108.00 KB (110,592
bytes)    4/5/2005 11:52 AM   Microsoft Corporation
          c:\program files\microsoft sql
server\80\tools\binn\sqlsvc.dll
odbcbcp   2000.086.1830.00 (srv03_sp1_rtm.050324-
1447)     24.00 KB (24,576 bytes)       4/5/2005
11:23 AM  Microsoft Corporation
          c:\windows\system32\odbcbcp.dll
sqlresld  2000.080.2026.00    35.00 KB (35,840 bytes)
          4/5/2005 11:52 AM   Microsoft Corporation
          c:\program files\microsoft sql
server\80\tools\binn\sqlresld.dll
odbcint   3.526.1830.0 (srv03_sp1_rtm.050324-1447)
          92.00 KB (94,208 bytes)       4/5/2005
11:23 AM  Microsoft Corporation
          c:\windows\system32\odbcint.dll
resutils  5.2.3790.1830 (srv03_sp1_rtm.050324-1447)
          63.50 KB (65,024 bytes)       4/5/2005
11:23 AM  Microsoft Corporation
          c:\windows\system32\resutils.dll
sqlsvc    2000.080.0194.00    24.00 KB (24,576 bytes)
          4/5/2005 11:52 AM   Microsoft Corporation
          c:\program files\microsoft sql
server\80\tools\binn\resources\1033\sqlsvc.rll
sqlmangr  2000.080.0194.00    96.00 KB (98,304 bytes)
          4/5/2005 11:52 AM   Microsoft Corporation
          c:\program files\microsoft sql
server\80\tools\binn\resources\1033\sqlmangr.rll
rdpsnd    5.2.3790.0 (srv03_rtm.030324-2048)
          18.00 KB (18,432 bytes)       3/25/2003
6:00 AM   Microsoft Corporation
          c:\windows\system32\rdpsnd.dll
scredir   5.2.3790.1830 (srv03_sp1_rtm.050324-1447)
          28.00 KB (28,672 bytes)       4/5/2005
11:23 AM  Microsoft Corporation
          c:\windows\system32\scredir.dll
msacm32   5.2.3790.1830 (srv03_sp1_rtm.050324-1447)
          22.00 KB (22,528 bytes)       4/5/2005
11:23 AM  Microsoft Corporation
          c:\windows\system32\msacm32.drv
msacm32   5.2.3790.1830 (srv03_sp1_rtm.050324-1447)
          69.50 KB (71,168 bytes)       4/5/2005
11:23 AM  Microsoft Corporation
          c:\windows\system32\msacm32.dll
imaadp32  5.2.3790.0 (srv03_rtm.030324-2048)
          15.50 KB (15,872 bytes)       3/25/2003
6:00 AM   Microsoft Corporation
          c:\windows\system32\imaadp32.acm
msadp32   5.2.3790.0 (srv03_rtm.030324-2048)
          14.50 KB (14,848 bytes)       3/25/2003
6:00 AM   Microsoft Corporation
          c:\windows\system32\msadp32.acm
msg711    5.2.3790.0 (srv03_rtm.030324-2048)
          10.00 KB (10,240 bytes)       3/25/2003
6:00 AM   Microsoft Corporation
          c:\windows\system32\msg711.acm
msgsm32   5.2.3790.0 (srv03_rtm.030324-2048)
          20.50 KB (20,992 bytes)       3/25/2003
6:00 AM   Microsoft Corporation
          c:\windows\system32\msgsm32.acm
tssoft32  1.01      9.50 KB (9,728 bytes)
          3/25/2003 6:00 AM   DSP GROUP, INC.
          c:\windows\system32\tssoft32.acm
tsd32     1.03      16.50 KB (16,896 bytes)
          3/25/2003 6:00 AM   DSP GROUP, INC.
          c:\windows\system32\tsd32.dll
msg723    5.2.3790.1830       120.00 KB (122,880
bytes)    4/5/2005 11:23 AM   Microsoft Corporation
          c:\windows\system32\msg723.acm
msaud32   8.00.00.4487        288.00 KB (294,912
bytes)    3/25/2003 6:00 AM   Microsoft Corporation
          c:\windows\system32\msaud32.acm
sl_anet   3.02      84.00 KB (86,016 bytes)
          3/25/2003 6:00 AM   Sipro Lab Telecom Inc.
          c:\windows\system32\sl_anet.acm
l3codeca  1, 9, 0, 0305       284.00 KB (290,816
bytes)    3/25/2003 6:00 AM   Fraunhofer Institut
Integrierte Schaltungen IIS
          c:\windows\system32\l3codeca.acm
rdpclip   5.2.3790.1830 (srv03_sp1_rtm.050324-1447)
          68.00 KB (69,632 bytes)       4/5/2005
11:23 AM  Microsoft Corporation
          c:\windows\system32\rdpclip.exe
helpctr   5.2.3790.1830 (srv03_sp1_rtm.050324-1447)
          778.00 KB (796,672 bytes)     4/5/2005
11:23 AM  Microsoft Corporation
          c:\windows\pchealth\helpctr\binaries\helpct
r.exe
hcappres  5.2.3790.0 (srv03_rtm.030324-2048)
          6.50 KB (6,656 bytes)         4/5/2005
11:01 AM  Microsoft Corporation
          c:\windows\pchealth\helpctr\binaries\hcappr
es.dll
itss      5.2.3790.1830 (srv03_sp1_rtm.050324-1447)
          133.50 KB (136,704 bytes)     4/5/2005
11:23 AM  Microsoft Corporation
          c:\windows\system32\itss.dll
msxml3    8.70.1104.0         1.06 MB (1,107,456
bytes)    4/5/2005 11:23 AM   Microsoft Corporation
          c:\windows\system32\msxml3.dll
pchshell  5.2.3790.1830 (srv03_sp1_rtm.050324-1447)
          104.50 KB (107,008 bytes)     4/5/2005
11:23 AM  Microsoft Corporation
          c:\windows\pchealth\helpctr\binaries\pchshe
ll.dll
mshtml    6.00.3790.1830 (srv03_sp1_rtm.050324-1447)
          2.96 MB (3,108,864 bytes)     4/5/2005
11:23 AM  Microsoft Corporation
          c:\windows\system32\mshtml.dll
msls31    3.10.349.0          142.00 KB (145,408
bytes)    4/5/2005 11:23 AM   Microsoft Corporation
          c:\windows\system32\msls31.dll
msimtf    5.2.3790.1830 (srv03_sp1_rtm.050324-1447)
          156.00 KB (159,744 bytes)     4/5/2005
11:23 AM  Microsoft Corporation
          c:\windows\system32\msimtf.dll
msctf     5.2.3790.1830 (srv03_sp1_rtm.050324-1447)
          311.00 KB (318,464 bytes)     4/5/2005
11:23 AM  Microsoft Corporation
          c:\windows\system32\msctf.dll
jscript   5.6.0.8827          448.00 KB (458,752
bytes)    4/5/2005 11:23 AM   Microsoft Corporation
          c:\windows\system32\jscript.dll
imm32     5.2.3790.1830 (srv03_sp1_rtm.050324-1447)
          108.00 KB (110,592 bytes)     4/5/2005
11:23 AM  Microsoft Corporation
          c:\windows\system32\imm32.dll
mshtmled  6.00.3790.1830 (srv03_sp1_rtm.050324-1447)
          454.50 KB (465,408 bytes)     4/5/2005
11:23 AM  Microsoft Corporation
          c:\windows\system32\mshtmled.dll
vbscript  5.6.0.8827          392.00 KB (401,408
bytes)    4/5/2005 11:23 AM   Microsoft Corporation
          c:\windows\system32\vbscript.dll
msinfo    5.2.3790.1830 (srv03_sp1_rtm.050324-1447)
          376.00 KB (385,024 bytes)     4/5/2005
11:23 AM  Microsoft Corporation
          c:\windows\pchealth\helpctr\binaries\msinfo
.dll
mfc42u    6.06.8063.0         1.11 MB (1,163,776
bytes)    4/5/2005 11:23 AM   Microsoft Corporation
          c:\windows\system32\mfc42u.dll
```


© 2005 Hewlett-Packard Company. All rights reserved.

```
riched32  5.2.3790.0 (srv03_rtm.030324-2048)
          3.50 KB (3,584 bytes)         3/25/2003
6:00 AM   Microsoft Corporation
          c:\windows\system32\riched32.dll
riched20  5.31.23.1224        439.00 KB (449,536
bytes)    4/5/2005 11:23 AM   Microsoft Corporation
          c:\windows\system32\riched20.dll
helpsvc   5.2.3790.1830 (srv03_sp1_rtm.050324-1447)
          745.00 KB (762,880 bytes)     4/5/2005
11:23 AM  Microsoft Corporation
          c:\windows\pchealth\helpctr\binaries\helpsv
c.exe

[Services]

Display Name        Name      State     Start Mode
          Service Type        Path      Error Control
          Start Name          Tag ID
Application Experience Lookup Service   AeLookupSvc
          Running   Auto      Share Process
          c:\windows\system32\svchost.exe -k netsvcs
          Normal    LocalSystem         0
Alerter   Alerter   Stopped   Disabled  Share Process
          c:\windows\system32\svchost.exe -k
localservice        Normal    NT
AUTHORITY\LocalService        0
Application Layer Gateway Service       ALG
          Stopped   Manual    Own Process
          c:\windows\system32\alg.exe   Normal    NT
AUTHORITY\LocalService        0
Application Management        AppMgmt   Running
          Manual    Share Process
          c:\windows\system32\svchost.exe -k netsvcs
          Normal    LocalSystem         0
Windows Audio       AudioSrv  Stopped   Disabled
          Share Process
          c:\windows\system32\svchost.exe -k netsvcs
          Normal    LocalSystem         0
Background Intelligent Transfer Service BITS
          Stopped   Manual    Share Process
          c:\windows\system32\svchost.exe -k netsvcs
          Normal    LocalSystem         0
Computer Browser    Browser   Running   Auto
          Share Process
          c:\windows\system32\svchost.exe -k netsvcs
          Normal    LocalSystem         0
Indexing Service    CiSvc     Stopped   Disabled
          Share Process
          c:\windows\system32\cisvc.exe Normal
          LocalSystem         0
ClipBook  ClipSrv   Stopped   Disabled  Own Process
          c:\windows\system32\clipsrv.exe
          Normal    LocalSystem         0
COM+ System Application       COMSysApp Stopped
          Manual    Own Process
          c:\windows\system32\dllhost.exe
/processid:{02d4b3f1-fd88-11d1-960d-00805fc79235}
          Normal    LocalSystem         0
Cryptographic Services        CryptSvc  Running
          Auto      Share Process
          c:\windows\system32\svchost.exe -k netsvcs
          Normal    LocalSystem         0
DCOM Server Process Launcher  DcomLaunch
          Running   Auto      Share Process
          c:\windows\system32\svchost.exe -k
dcomlaunch          Normal    LocalSystem         0

Distributed File System       Dfs       Stopped
          Manual    Own Process
          c:\windows\system32\dfssvc.exe
          Normal    LocalSystem         0
DHCP Client         Dhcp      Stopped   Disabled
          Share Process
          c:\windows\system32\svchost.exe -k
networkservice      Normal    NT
AUTHORITY\NetworkService      0
Logical Disk Manager Administrative Service
          dmadmin   Stopped   Manual    Share Process
          c:\windows\system32\dmadmin.exe /com
          Normal    LocalSystem         0
Logical Disk Manager          dmserver  Running
          Auto      Share Process
          c:\windows\system32\svchost.exe -k netsvcs
          Normal    LocalSystem         0
DNS Client          Dnscache  Running   Auto
          Share Process
          c:\windows\system32\svchost.exe -k
networkservice      Normal    NT
AUTHORITY\NetworkService      0
Error Reporting Service       ERSvc     Running
          Auto      Share Process
          c:\windows\system32\svchost.exe -k winerr
          Ignore    LocalSystem         0
Event Log Eventlog  Running   Auto      Share Process
          c:\windows\system32\services.exe
          Normal    LocalSystem         0
COM+ Event System   EventSystem         Running
          Auto      Share Process
          c:\windows\system32\svchost.exe -k netsvcs
          Normal    LocalSystem         0
Help and Support    helpsvc   Running   Manual
          Share Process
          c:\windows\system32\svchost.exe -k netsvcs
          Normal    LocalSystem         0
Human Interface Device Access HidServ   Stopped
          Disabled  Share Process
          c:\windows\system32\svchost.exe -k netsvcs
          Normal    LocalSystem         0
HTTP SSL  HTTPFilter          Stopped   Manual
          Share Process
          c:\windows\system32\lsass.exe Normal
          LocalSystem         0
IMAPI CD-Burning COM Service  ImapiService
          Stopped   Disabled  Own Process
          c:\windows\system32\imapi.exe Normal
          LocalSystem         0
Intersite Messaging IsmServ   Stopped   Disabled  Own
Process   c:\windows\system32\ismserv.exe
          Normal    LocalSystem         0
Kerberos Key Distribution Center        kdc
          Stopped   Disabled  Share Process
          c:\windows\system32\lsass.exe Normal
          LocalSystem         0
Server    lanmanserver        Running   Auto
          Share Process
          c:\windows\system32\svchost.exe -k netsvcs
          Normal    LocalSystem         0
Workstation         lanmanworkstation   Running
          Auto      Share Process
          c:\windows\system32\svchost.exe -k netsvcs
          Normal    LocalSystem         0
License Logging     LicenseService      Stopped
          Disabled  Own Process
          c:\windows\system32\llssrv.exe
          Normal    NT AUTHORITY\NetworkService   0

TCP/IP NetBIOS Helper         LmHosts   Running
          Auto      Share Process
          c:\windows\system32\svchost.exe -k
localservice        Normal    NT
AUTHORITY\LocalService        0
Messenger Messenger Stopped   Disabled  Share Process
          c:\windows\system32\svchost.exe -k netsvcs
          Normal    LocalSystem         0
NetMeeting Remote Desktop Sharing       mnmsrvc
          Stopped   Disabled  Own Process
          c:\windows\system32\mnmsrvc.exe
          Normal    LocalSystem         0
Distributed Transaction Coordinator     MSDTC
          Running   Auto      Own Process
          c:\windows\system32\msdtc.exe Normal    NT
AUTHORITY\NetworkService      1
Windows Installer   MSIServer Stopped   Manual
          Share Process
          c:\windows\system32\msiexec.exe /v
          Normal    LocalSystem         0
MSSQLSERVER         MSSQLSERVER         Stopped
          Manual    Own Process
          c:\sqlser~1\mssql\binn\sqlservr.exe
          Normal    LocalSystem         0
MSSQLServerADHelper MSSQLServerADHelper Stopped
          Manual    Own Process         c:\program
files\microsoft sql server\80\tools\binn\sqladhlp.exe
          Normal    LocalSystem         0
Network DDE         NetDDE    Stopped   Disabled
          Share Process
          c:\windows\system32\netdde.exe
          Normal    LocalSystem         0
Network DDE DSDM    NetDDEdsdm          Stopped
          Disabled  Share Process
          c:\windows\system32\netdde.exe
          Normal    LocalSystem         0
Net Logon Netlogon  Stopped   Manual    Share Process
          c:\windows\system32\lsass.exe Normal
          LocalSystem         0
Network Connections Netman    Running   Manual
          Share Process
          c:\windows\system32\svchost.exe -k netsvcs
          Normal    LocalSystem         0
Network Location Awareness (NLA)        Nla
          Running   Manual    Share Process
          c:\windows\system32\svchost.exe -k netsvcs
          Normal    LocalSystem         0
File Replication    NtFrs     Stopped   Manual    Own
Process   c:\windows\system32\ntfrs.exe Ignore
          LocalSystem         0
NT LM Security Support Provider         NtLmSsp
          Stopped   Manual    Share Process
```


© 2005 Hewlett-Packard Company. All rights reserved.

```
          c:\windows\system32\lsass.exe Normal
          LocalSystem         0
Removable Storage   NtmsSvc    Stopped   Manual
          Share Process
          c:\windows\system32\svchost.exe -k netsvcs
          Normal    LocalSystem         0
Plug and Play       PlugPlay  Running   Auto
          Share Process
          c:\windows\system32\services.exe
          Normal    LocalSystem         0
IPSEC Services      PolicyAgent         Running
          Auto      Share Process
          c:\windows\system32\lsass.exe Normal
          LocalSystem         0
Protected Storage   ProtectedStorage    Running
          Auto      Share Process
          c:\windows\system32\lsass.exe Normal
          LocalSystem         0
Remote Access Auto Connection Manager   RasAuto
          Stopped   Manual    Share Process
          c:\windows\system32\svchost.exe -k netsvcs
          Normal    LocalSystem         0
Remote Access Connection Manager        RasMan
          Stopped   Manual    Share Process
          c:\windows\system32\svchost.exe -k netsvcs
          Normal    LocalSystem         0
Remote Desktop Help Session Manager     RDSessMgr
          Stopped   Manual    Own Process
          c:\windows\system32\sessmgr.exe
          Normal    LocalSystem         0
Routing and Remote Access     RemoteAccess
          Stopped   Disabled  Share Process
          c:\windows\system32\svchost.exe -k netsvcs
          Normal    LocalSystem         0
Remote Registry     RemoteRegistry      Stopped
          Disabled  Share Process
          c:\windows\system32\svchost.exe -k regsvc
          Normal    NT AUTHORITY\LocalService     0

Remote Procedure Call (RPC) Locator     RpcLocator
          Stopped   Manual    Own Process
          c:\windows\system32\locator.exe
          Normal    NT AUTHORITY\NetworkService   0

Remote Procedure Call (RPC)   RpcSs     Running
          Auto      Share Process
          c:\windows\system32\svchost.exe -k rpcss
          Normal    NT Authority\NetworkService   0

Resultant Set of Policy Provider        RSoPProv
          Stopped   Manual    Share Process
          c:\windows\system32\rsopprov.exe
          Normal    LocalSystem         0
Special Administration Console Helper   sacsvr
          Stopped   Manual    Share Process
          c:\windows\system32\svchost.exe -k netsvcs
          Normal    LocalSystem         0
Security Accounts Manager     SamSs     Running
          Auto      Share Process
          c:\windows\system32\lsass.exe Normal
          LocalSystem         0
Smart Card          SCardSvr  Stopped   Manual
          Share Process
          c:\windows\system32\scardsvr.exe
          Ignore    NT AUTHORITY\LocalService     0

Task Scheduler      Schedule  Stopped   Disabled
          Share Process
          c:\windows\system32\svchost.exe -k netsvcs
          Normal    LocalSystem         0
Secondary Logon     seclogon  Stopped   Disabled
          Share Process
          c:\windows\system32\svchost.exe -k netsvcs
          Ignore    LocalSystem         0
System Event Notification     SENS      Running
          Auto      Share Process
          c:\windows\system32\svchost.exe -k netsvcs
          Normal    LocalSystem         0
Windows Firewall/Internet Connection Sharing (ICS)
          SharedAccess        Stopped   Disabled
          Share Process
          c:\windows\system32\svchost.exe -k netsvcs
          Normal    LocalSystem         0
Shell Hardware Detection      ShellHWDetection
          Running   Auto      Share Process
          c:\windows\system32\svchost.exe -k netsvcs
          Ignore    LocalSystem         0
Print Spooler       Spooler   Stopped   Disabled  Own
Process   c:\windows\system32\spoolsv.exe
          Normal    LocalSystem         0
SQLSERVERAGENT      SQLSERVERAGENT      Stopped
          Manual    Own Process
          c:\sqlser~1\mssql\binn\sqlagent.exe
          Normal    LocalSystem         0
Windows Image Acquisition (WIA)         stisvc
          Stopped   Disabled  Share Process
          c:\windows\system32\svchost.exe -k imgsvc
          Normal    NT AUTHORITY\LocalService     0

Microsoft Software Shadow Copy Provider swprv
          Stopped   Manual    Own Process
          c:\windows\system32\svchost.exe -k swprv
          Normal    LocalSystem         0
Performance Logs and Alerts   SysmonLog Stopped
          Manual    Own Process
          c:\windows\system32\smlogsvc.exe
          Normal    NT Authority\NetworkService   0

Telephony TapiSrv   Stopped   Manual    Share Process
          c:\windows\system32\svchost.exe -k tapisrv
          Normal    LocalSystem         0
Terminal Services   TermService         Running
          Manual    Share Process
          c:\windows\system32\svchost.exe -k termsvcs
          Normal    LocalSystem         0
Themes    Themes    Stopped   Disabled  Share Process
          c:\windows\system32\svchost.exe -k netsvcs
          Normal    LocalSystem         0
Telnet    TlntSvr   Stopped   Disabled  Own Process
          c:\windows\system32\tlntsvr.exe
          Normal    NT AUTHORITY\LocalService     0

Distributed Link Tracking Server        TrkSvr
          Stopped   Disabled  Share Process
          c:\windows\system32\svchost.exe -k netsvcs
          Normal    LocalSystem         0
Distributed Link Tracking Client        TrkWks
          Stopped   Disabled  Share Process
          c:\windows\system32\svchost.exe -k netsvcs
          Normal    LocalSystem         0
Terminal Services Session Directory     Tssdis
          Stopped   Disabled  Own Process
          c:\windows\system32\tssdis.exe
          Normal    LocalSystem         0
Windows User Mode Driver Framework      UMWdf
          Stopped   Manual    Own Process
          c:\windows\system32\wdfmgr.exe
          Normal    NT AUTHORITY\LocalService     0

Upload Manager      uploadmgr Stopped   Manual
          Share Process
          c:\windows\system32\svchost.exe -k netsvcs
          Normal    LocalSystem         0
Uninterruptible Power Supply  UPS       Stopped
          Manual    Own Process
          c:\windows\system32\ups.exe   Normal    NT
AUTHORITY\LocalService        0
Virtual Disk Service          vds       Stopped
          Manual    Own Process
          c:\windows\system32\vds.exe   Normal
          LocalSystem         0
Volume Shadow Copy  VSS       Stopped   Manual    Own
Process   c:\windows\system32\vssvc.exe Normal
          LocalSystem         0
Windows Time        W32Time   Running   Auto
          Share Process
          c:\windows\system32\svchost.exe -k
localservice        Normal    NT
AUTHORITY\LocalService        0
WebClient WebClient Stopped   Disabled  Share Process
          c:\windows\system32\svchost.exe -k
localservice        Normal    NT
AUTHORITY\LocalService        0
WinHTTP Web Proxy Auto-Discovery Service
          WinHttpAutoProxySvc Stopped   Manual
          Share Process
          c:\windows\system32\svchost.exe -k
localservice        Normal    NT
AUTHORITY\LocalService        0
Windows Management Instrumentation      winmgmt
          Running   Auto      Share Process
          c:\windows\system32\svchost.exe -k netsvcs
          Ignore    LocalSystem         0
Portable Media Serial Number Service    WmdmPmSN
          Stopped   Manual    Share Process
          c:\windows\system32\svchost.exe -k netsvcs
          Normal    LocalSystem         0
Windows Management Instrumentation Driver Extensions
          Wmi       Stopped   Manual    Share Process
          c:\windows\system32\svchost.exe -k netsvcs
          Normal    LocalSystem         0
WMI Performance Adapter       WmiApSrv  Stopped
          Manual    Own Process
          c:\windows\system32\wbem\wmiapsrv.exe
          Normal    LocalSystem         0
Automatic Updates   wuauserv  Stopped   Disabled
          Share Process
          c:\windows\system32\svchost.exe -k netsvcs
          Normal    LocalSystem         0
```


© 2005 Hewlett-Packard Company. All rights reserved.

```
Wireless Configuration        WZCSVC    Stopped
          Disabled  Share Process
          c:\windows\system32\svchost.exe -k netsvcs
          Normal    LocalSystem         0
Network Provisioning Service  xmlprov   Stopped
          Manual    Share Process
          c:\windows\system32\svchost.exe -k netsvcs
          Normal    LocalSystem         0

[Program Groups]

Group Name          Name      User Name
Accessories         Default User:Accessories
          Default User
Accessories\Accessibility     Default
User:Accessories\Accessibility          Default User

Accessories\Entertainment     Default
User:Accessories\Entertainment          Default User

Startup   Default User:Startup          Default User

Accessories         All Users:Accessories         All
Users
Accessories\Accessibility     All
Users:Accessories\Accessibility         All Users
Accessories\Communications    All
Users:Accessories\Communications        All Users
Accessories\Entertainment     All
Users:Accessories\Entertainment         All Users
Accessories\System Tools      All
Users:Accessories\System Tools          All Users
Administrative Tools          All
Users:Administrative Tools    All Users
Microsoft SQL Server          All Users:Microsoft SQL
Server    All Users
Startup   All Users:Startup   All Users
Accessories         NT AUTHORITY\SYSTEM:Accessories
          NT AUTHORITY\SYSTEM
Accessories\Accessibility     NT
AUTHORITY\SYSTEM:Accessories\Accessibility        NT
AUTHORITY\SYSTEM
Accessories\Entertainment     NT
AUTHORITY\SYSTEM:Accessories\Entertainment        NT
AUTHORITY\SYSTEM
Startup   NT AUTHORITY\SYSTEM:Startup   NT
AUTHORITY\SYSTEM
Accessories         TWIN\Administrator:Accessories
          TWIN\Administrator
Accessories\Accessibility
          TWIN\Administrator:Accessories\Accessibilit
y         TWIN\Administrator
Accessories\Entertainment
          TWIN\Administrator:Accessories\Entertainmen
t         TWIN\Administrator
Administrative Tools
          TWIN\Administrator:Administrative Tools
          TWIN\Administrator
Startup   TWIN\Administrator:Startup
          TWIN\Administrator

[Startup Programs]

Program   Command   User Name Location
desktop   desktop.ini         NT AUTHORITY\SYSTEM
          Startup
desktop   desktop.ini         TWIN\Administrator
          Startup
desktop   desktop.ini         .DEFAULT  Startup
desktop   desktop.ini         All Users Common
Startup
Service Manager
          c:\progra~1\micros~1\80\tools\binn\sqlmangr
.exe  /n  All Users Common Startup

[OLE Registration]

Object    Local Server
Sound (OLE2)        sndrec32.exe
Media Clip          mplay32.exe
Video Clip          mplay32.exe /avi
MIDI Sequence       mplay32.exe /mid
Sound     Not Available
Media Clip          Not Available
WordPad Document    "%programfiles%\windows
nt\accessories\wordpad.exe"
Windows Media Services DRM Storage object         Not
Available
Bitmap Image        mspaint.exe

[Windows Error Reporting]

Time      Type      Details
4/14/2005 3:42 PM   Application Hang    Hanging
application mmc.exe, version 5.2.3790.1830, hang
module hungapp, version 0.0.0.0, hang address
0x00000000.&#x000d;&#x000a;

[Internet Settings]



[Internet Explorer]

[ Following are sub-categories of this main category
]
[Summary]

Item      Value
Version   6.0.3790.1830
Build     63790.1830
Application Path    C:\Program Files\Internet
Explorer
Language  English (United States)
Active Printer      Not Available

Cipher Strength     128-bit
Content Advisor     Disabled
IEAK Install        No

[File Versions]

File      Version   Size      Date      Path
          Company
actxprxy.dll        6.0.3790.1830       97 KB
          3/24/2005 5:55:26 PM
          C:\WINDOWS\system32 Microsoft Corporation

advpack.dll         6.0.3790.1830       98 KB
          3/24/2005 5:55:28 PM
          C:\WINDOWS\system32 Microsoft Corporation

asctrls.ocx         6.0.3790.0          90 KB
          3/25/2003 7:00:00 AM
          C:\WINDOWS\system32 Microsoft Corporation

browselc.dll        6.0.3790.0          62 KB
          3/25/2003 7:00:00 AM
          C:\WINDOWS\system32 Microsoft Corporation

browseui.dll        6.0.3790.1830       1,009 KB
          3/24/2005 5:56:10 PM
          C:\WINDOWS\system32 Microsoft Corporation

cdfview.dll         6.0.3790.1830       149 KB
          3/24/2005 5:56:32 PM
          C:\WINDOWS\system32 Microsoft Corporation

comctl32.dll        5.82.3790.1830      585 KB
          3/24/2005 5:57:56 PM
          C:\WINDOWS\system32 Microsoft Corporation

dxtrans.dll         6.3.3790.1830       205 KB
          3/24/2005 6:00:58 PM
          C:\WINDOWS\system32 Microsoft Corporation

dxtmsft.dll         6.3.3790.1830       355 KB
          3/24/2005 6:00:58 PM
          C:\WINDOWS\system32 Microsoft Corporation

iecont.dll          <File Missing>      Not Available
          Not Available       Not Available       Not
Available
iecontlc.dll        <File Missing>      Not Available
          Not Available       Not Available       Not
Available
iedkcs32.dll        16.0.3790.1830      324 KB
          3/24/2005 6:04:58 PM
          C:\WINDOWS\system32 Microsoft Corporation

iepeers.dll         6.0.3790.1830       248 KB
          3/24/2005 6:04:58 PM
          C:\WINDOWS\system32 Microsoft Corporation

iesetup.dll         6.0.3790.1830       61 KB
          3/24/2005 6:04:58 PM
          C:\WINDOWS\system32 Microsoft Corporation

ieuinit.inf         Not Available       24 KB
          3/24/2005 6:04:58 PM
          C:\WINDOWS\system32 Not Available
iexplore.exe        6.0.3790.1830       92 KB
          3/24/2005 6:04:58 PM          C:\Program
Files\Internet Explorer       Microsoft Corporation

imgutil.dll         6.0.3790.1830       38 KB
          3/24/2005 6:05:04 PM
          C:\WINDOWS\system32 Microsoft Corporation
```


© 2005 Hewlett-Packard Company. All rights reserved.

```
inetcpl.cpl         6.0.3790.1830       358 KB
          3/24/2005 6:05:06 PM
          C:\WINDOWS\system32 Microsoft Corporation

inetcplc.dll        6.0.3790.0          109 KB
          3/25/2003 7:00:00 AM
          C:\WINDOWS\system32 Microsoft Corporation

inseng.dll          6.0.3790.1830       94 KB
          3/24/2005 6:05:06 PM
          C:\WINDOWS\system32 Microsoft Corporation

mlang.dll 6.0.3790.1830       578 KB    3/24/2005
6:07:20 PM          C:\WINDOWS\system32 Microsoft
Corporation
msencode.dll        2002.10.4.0         112 KB
          3/25/2003 7:00:00 AM
          C:\WINDOWS\system32 ???À?w??
mshta.exe 6.0.3790.1830       30 KB     3/24/2005
6:07:26 PM          C:\WINDOWS\system32 Microsoft
Corporation
mshtml.dll          6.0.3790.1830       3,036 KB
          3/24/2005 6:07:26 PM
          C:\WINDOWS\system32 Microsoft Corporation

mshtml.tlb          6.0.3790.1830       1,320 KB
          3/24/2005 6:07:26 PM
          C:\WINDOWS\system32 Microsoft Corporation

mshtmled.dll        6.0.3790.1830       455 KB
          3/24/2005 6:07:26 PM
          C:\WINDOWS\system32 Microsoft Corporation

mshtmler.dll        6.0.3790.1830       56 KB
          3/24/2005 6:07:26 PM
          C:\WINDOWS\system32 Microsoft Corporation

msident.dll         6.0.3790.1830       48 KB
          3/24/2005 6:07:28 PM
          C:\WINDOWS\system32 Microsoft Corporation

msidntld.dll        6.0.3790.0          15 KB
          3/25/2003 7:00:00 AM
          C:\WINDOWS\system32 Microsoft Corporation

msieftp.dll         6.0.3790.1830       244 KB
          3/24/2005 6:07:28 PM
          C:\WINDOWS\system32 Microsoft Corporation

msrating.dll        6.0.3790.1830       144 KB
          3/24/2005 6:07:36 PM
          C:\WINDOWS\system32 Microsoft Corporation

mstime.dll          6.0.3790.1830       523 KB
          3/24/2005 6:07:38 PM
          C:\WINDOWS\system32 Microsoft Corporation

occache.dll         6.0.3790.1830       94 KB
          3/24/2005 6:08:34 PM
          C:\WINDOWS\system32 Microsoft Corporation

proctexe.ocx        6.3.3790.1830       83 KB
          3/24/2005 6:12:26 PM
          C:\WINDOWS\system32 Intel Corporation
sendmail.dll        6.0.3790.1830       56 KB
          3/24/2005 6:13:36 PM
          C:\WINDOWS\system32 Microsoft Corporation

shdoclc.dll         6.0.3790.0          589 KB
          3/25/2003 7:00:00 AM
          C:\WINDOWS\system32 Microsoft Corporation

shdocvw.dll         6.0.3790.1830       1,468 KB
          3/24/2005 6:13:36 PM
          C:\WINDOWS\system32 Microsoft Corporation

shfolder.dll        6.0.3790.1830       25 KB
          3/24/2005 6:13:36 PM
          C:\WINDOWS\system32 Microsoft Corporation

shlwapi.dll         6.0.3790.1830       314 KB
          3/24/2005 6:13:40 PM
          C:\WINDOWS\system32 Microsoft Corporation

tdc.ocx   1.3.0.3130          58 KB     3/25/2003
7:00:00 AM          C:\WINDOWS\system32 Microsoft
Corporation
url.dll   6.0.3790.1830       37 KB     3/24/2005
6:26:12 PM          C:\WINDOWS\system32 Microsoft
Corporation
urlmon.dll          6.0.3790.1830       673 KB
          3/24/2005 6:26:12 PM
          C:\WINDOWS\system32 Microsoft Corporation

webcheck.dll        6.0.3790.1830       273 KB
          3/24/2005 6:26:16 PM
          C:\WINDOWS\system32 Microsoft Corporation

wininet.dll         6.0.3790.1830       646 KB
          3/24/2005 6:26:18 PM
          C:\WINDOWS\system32 Microsoft Corporation


[Connectivity]

Item      Value
Connection Preference         Never dial

LAN Settings

AutoConfigProxy     wininet.dll
AutoProxyDetectMode Disabled
AutoConfigURL
Proxy     Disabled
ProxyServer
ProxyOverride

[Cache]

[ Following are sub-categories of this main category
]
[Summary]

Item      Value
Page Refresh Type   Automatic
Temporary Internet Files Folder         C:\Documents
and Settings\Administrator\Local Settings\Temporary
Internet Files
Total Disk Space    Not Available
Available Disk Space          Not Available
Maximum Cache Size  Not Available
Available Cache Size          Not Available

[List of Objects]

Program File        Status    CodeBase
No cached object information available


[Content]

[ Following are sub-categories of this main category
]
[Summary]

Item      Value
Content Advisor     Disabled

[Personal Certificates]

Issued To Issued By Validity  Signature Algorithm
No personal certificate information available


[Other People Certificates]

Issued To Issued By Validity  Signature Algorithm
No other people certificate information available


[Publishers]

Name
No publisher information available

[Security]

Zone      Security Level
My Computer         Custom
Local intranet      Custom
Trusted sites       Low
Internet  Medium
Restricted sites    Custom
```

Server Bus Performance Driver Registry Parameters

© 2005 Hewlett-Packard Company. All rights reserved.

```
Key Name:
HKEY_LOCAL_MACHINE\SYSTEM\CurrentControlSet\Services\
hpqcissb
Class Name:         <NO CLASS>
Last Write Time:    4/14/2005 - 4:02 PM
Value 0
  Name:             Type
  Type:             REG_DWORD
  Data:             0x1

Value 1
  Name:             Start
  Type:             REG_DWORD
  Data:             0

Value 2
  Name:             ErrorControl
  Type:             REG_DWORD
  Data:             0x1

Value 3
  Name:             Tag
  Type:             REG_DWORD
  Data:             0x102

Value 4
  Name:             ImagePath
  Type:             REG_EXPAND_SZ
  Data:             system32\DRIVERS\hpqcissb.sys

Value 5
  Name:             DisplayName
  Type:             REG_SZ
  Data:             Smart Array Controllers Non-
Miniport Bus Driver

Value 6
  Name:             Group
  Type:             REG_SZ
  Data:             port


Key Name:
HKEY_LOCAL_MACHINE\SYSTEM\CurrentControlSet\Services\
hpqcissb\Parameters
Class Name:         <NO CLASS>
Last Write Time:    4/5/2005 - 1:11 PM
Value 0
  Name:             CompletionMode
  Type:             REG_DWORD
  Data:             0x2

Value 1
  Name:             CosTimerRate
  Type:             REG_DWORD
  Data:             0x2


Key Name:
HKEY_LOCAL_MACHINE\SYSTEM\CurrentControlSet\Services\
hpqcissb\Parameters\Controller8
Class Name:         <NO CLASS>
Last Write Time:    4/5/2005 - 1:11 PM
Value 0
  Name:             CompletionMode
  Type:             REG_DWORD
  Data:             0x1


Key Name:
HKEY_LOCAL_MACHINE\SYSTEM\CurrentControlSet\Services\
hpqcissb\Security
Class Name:         <NO CLASS>
Last Write Time:    4/5/2005 - 12:02 PM
Value 0
  Name:             Security
  Type:             REG_BINARY
  Data:
00000000   01 00 14 80 b8 00 00 00 - c4 00 00 00 14
00 00 00  ....¸...Ä.......
00000010   30 00 00 00 02 00 1c 00 - 01 00 00 00 02
80 14 00  0...............
00000020   ff 01 0f 00 01 01 00 00 - 00 00 00 01 00
00 00 00  ÿ...............
00000030   02 00 88 00 06 00 00 00 - 00 00 14 00 fd
01 02 00  ............ý...
00000040   01 01 00 00 00 00 00 05 - 12 00 00 00 00
00 18 00  ................
00000050   ff 01 0f 00 01 02 00 00 - 00 00 00 05 20
00 00 00  ÿ........... ...
00000060   20 02 00 00 00 00 14 00 - 8d 01 02 00 01
01 00 00   ...............
00000070   00 00 00 05 04 00 00 00 - 00 00 14 00 8d
01 02 00  ................
00000080   01 01 00 00 00 00 00 05 - 06 00 00 00 00
00 14 00  ................
00000090   00 01 00 00 01 01 00 00 - 00 00 00 05 0b
00 00 00  ................
000000a0   00 00 18 00 fd 01 02 00 - 01 02 00 00 00
00 00 05  ....ý...........
000000b0   20 00 00 00 23 02 00 00 - 01 01 00 00 00
00 00 05   ...#...........
000000c0   12 00 00 00 01 01 00 00 - 00 00 00 05 12
00 00 00  ................


Key Name:
HKEY_LOCAL_MACHINE\SYSTEM\CurrentControlSet\Services\
hpqcissb\Enum
Class Name:         <NO CLASS>
Last Write Time:    4/14/2005 - 4:02 PM
Value 0
  Name:             0
  Type:             REG_SZ
  Data:
PCI\VEN_0E11&DEV_0046&SUBSYS_409C0E11&REV_01\5&2c344c
1f&0&203840

Value 1
  Name:             Count
  Type:             REG_DWORD
  Data:             0xf

Value 2
  Name:             NextInstance
  Type:             REG_DWORD
  Data:             0xf

Value 3
  Name:             1
  Type:             REG_SZ
  Data:
PCI\VEN_0E11&DEV_0046&SUBSYS_409D0E11&REV_01\5&2c344c
1f&0&283840

Value 4
  Name:             2
  Type:             REG_SZ
  Data:
PCI\VEN_0E11&DEV_0046&SUBSYS_409C0E11&REV_01\5&2363b0
a8&0&204040

Value 5
  Name:             3
  Type:             REG_SZ
  Data:
PCI\VEN_0E11&DEV_0046&SUBSYS_409D0E11&REV_01\5&2363b0
a8&0&284040

Value 6
  Name:             4
  Type:             REG_SZ
  Data:
PCI\VEN_0E11&DEV_0046&SUBSYS_409C0E11&REV_01\5&56dd26
4&0&206848

Value 7
  Name:             5
  Type:             REG_SZ
  Data:
PCI\VEN_0E11&DEV_0046&SUBSYS_409D0E11&REV_01\5&56dd26
4&0&286848

Value 8
  Name:             6
  Type:             REG_SZ
  Data:
PCI\VEN_0E11&DEV_0046&SUBSYS_409C0E11&REV_01\5&259980
46&0&207050

Value 9
  Name:             7
  Type:             REG_SZ
  Data:
PCI\VEN_0E11&DEV_0046&SUBSYS_409D0E11&REV_01\5&259980
46&0&287050

Value 10
  Name:             8
  Type:             REG_SZ
  Data:
PCI\VEN_0E11&DEV_0046&SUBSYS_409B0E11&REV_01\4&2534a5
7b&0&5058

Value 11
  Name:             9
  Type:             REG_SZ
```


© 2005 Hewlett-Packard Company. All rights reserved.

```
  Data:
PCI\VEN_0E11&DEV_0046&SUBSYS_409C0E11&REV_01\5&1b3a30
7e&0&204858

Value 12
  Name:            10
  Type:            REG_SZ
  Data:
PCI\VEN_0E11&DEV_0046&SUBSYS_409D0E11&REV_01\5&1b3a30
7e&0&284858

Value 13
  Name:            11
  Type:            REG_SZ
  Data:
PCI\VEN_0E11&DEV_0046&SUBSYS_409C0E11&REV_01\5&30fce3
fc&0&205860

Value 14
  Name:            12
  Type:            REG_SZ
  Data:
PCI\VEN_0E11&DEV_0046&SUBSYS_409D0E11&REV_01\5&30fce3
fc&0&285860

Value 15
  Name:            13
  Type:            REG_SZ
  Data:
PCI\VEN_0E11&DEV_0046&SUBSYS_409C0E11&REV_01\5&282c48
85&0&206060

Value 16
  Name:            14
  Type:            REG_SZ
  Data:
PCI\VEN_0E11&DEV_0046&SUBSYS_409D0E11&REV_01\5&282c48
85&0&286060
```

Server Disk Device Performance Driver Registry Parameters

```
Key Name:
HKEY_LOCAL_MACHINE\SYSTEM\CurrentControlSet\Services\
hpqcissd
Class Name:        <NO CLASS>
Last Write Time:   4/14/2005 - 4:02 PM
Value 0
  Name:            Type
  Type:            REG_DWORD
  Data:            0x1

Value 1
  Name:            Start
  Type:            REG_DWORD
  Data:            0

Value 2
  Name:            ErrorControl
  Type:            REG_DWORD
  Data:            0x1

Value 3
  Name:            Tag
  Type:            REG_DWORD
  Data:            0x102

Value 4
  Name:            ImagePath
  Type:            REG_EXPAND_SZ
  Data:            system32\DRIVERS\hpqcissd.sys

Value 5
  Name:            DisplayName
  Type:            REG_SZ
  Data:            Smart Array Controllers Non-
Miniport Disk Driver

Value 6
  Name:            Group
  Type:            REG_SZ
  Data:            Primary Disk


Key Name:
HKEY_LOCAL_MACHINE\SYSTEM\CurrentControlSet\Services\
hpqcissd\Security
Class Name:        <NO CLASS>
Last Write Time:   4/5/2005 - 12:03 PM
Value 0
  Name:            Security
  Type:            REG_BINARY
  Data:
00000000   01 00 14 80 b8 00 00 00 - c4 00 00 00 14
00 00 00  ....¸...Ä.......
00000010   30 00 00 00 02 00 1c 00 - 01 00 00 00 02
80 14 00  0...............
00000020   ff 01 0f 00 01 01 00 00 - 00 00 00 01 00
00 00 00  ÿ...............
00000030   02 00 88 00 06 00 00 00 - 00 00 14 00 fd
01 02 00  ............ý...
00000040   01 01 00 00 00 00 00 05 - 12 00 00 00 00
00 18 00  ................
00000050   ff 01 0f 00 01 02 00 00 - 00 00 00 05 20
00 00 00  ÿ........... ...
00000060   20 02 00 00 00 00 14 00 - 8d 01 02 00 01
01 00 00   ...............
00000070   00 00 00 05 04 00 00 00 - 00 00 14 00 8d
01 02 00  ................
00000080   01 01 00 00 00 00 00 05 - 06 00 00 00 00
00 14 00  ................
00000090   00 01 00 00 01 01 00 00 - 00 00 00 05 0b
00 00 00  ................
000000a0   00 00 18 00 fd 01 02 00 - 01 02 00 00 00
00 00 05  ....ý...........
000000b0   20 00 00 00 23 02 00 00 - 01 01 00 00 00
00 00 05   ...#...........
000000c0   12 00 00 00 01 01 00 00 - 00 00 00 05 12
00 00 00  ................



Key Name:
HKEY_LOCAL_MACHINE\SYSTEM\CurrentControlSet\Services\
hpqcissd\Enum
Class Name:        <NO CLASS>
Last Write Time:   4/14/2005 - 4:02 PM
Value 0
  Name:            0
  Type:            REG_SZ
  Data:
HPQCISS\Disk&VEN_HP&PROD_LOGICAL_VOLUME\6&5f1dc7&0&00
00004000000000

Value 1
  Name:            Count
  Type:            REG_DWORD
  Data:            0x13

Value 2
  Name:            NextInstance
  Type:            REG_DWORD
  Data:            0x13

Value 3
  Name:            1
  Type:            REG_SZ
  Data:
HPQCISS\Disk&VEN_HP&PROD_LOGICAL_VOLUME\6&5f1dc7&0&01
00004000000000

Value 4
  Name:            2
  Type:            REG_SZ
  Data:
HPQCISS\Disk&VEN_HP&PROD_LOGICAL_VOLUME\6&78f08cd&0&0
000004000000000

Value 5
  Name:            3
  Type:            REG_SZ
  Data:
HPQCISS\Disk&VEN_HP&PROD_LOGICAL_VOLUME\6&78f08cd&0&0
100004000000000

Value 6
  Name:            4
  Type:            REG_SZ
  Data:
HPQCISS\Disk&VEN_HP&PROD_LOGICAL_VOLUME\6&27e47dd0&0&
0000004000000000

Value 7
  Name:            5
  Type:            REG_SZ
```


© 2005 Hewlett-Packard Company. All rights reserved.

```
  Data:
HPQCISS\Disk&VEN_HP&PROD_LOGICAL_VOLUME\6&1e3dcc80&0&
0000004000000000

Value 8
  Name:            6
  Type:            REG_SZ
  Data:
HPQCISS\Disk&VEN_HP&PROD_LOGICAL_VOLUME\6&1bb4d19c&0&
0000004000000000

Value 9
  Name:            7
  Type:            REG_SZ
  Data:
HPQCISS\Disk&VEN_HP&PROD_LOGICAL_VOLUME\6&1bb4d19c&0&
0100004000000000

Value 10
  Name:            8
  Type:            REG_SZ
  Data:
HPQCISS\Disk&VEN_HP&PROD_LOGICAL_VOLUME\6&1ec08c08&0&
0000004000000000

Value 11
  Name:            9
  Type:            REG_SZ
  Data:
HPQCISS\Disk&VEN_HP&PROD_LOGICAL_VOLUME\6&1ec08c08&0&
0100004000000000

Value 12
  Name:            10
  Type:            REG_SZ
  Data:
HPQCISS\Disk&VEN_HP&PROD_LOGICAL_VOLUME\6&3b81cb25&0&
0000004000000000

Value 13
  Name:            11
  Type:            REG_SZ
  Data:
HPQCISS\Disk&VEN_HP&PROD_LOGICAL_VOLUME\6&9bfb032&0&0
000004000000000

Value 14
  Name:            12
  Type:            REG_SZ
  Data:
HPQCISS\Disk&VEN_HP&PROD_LOGICAL_VOLUME\6&ab01d09&0&0
000004000000000

Value 15
  Name:            13
  Type:            REG_SZ
  Data:
HPQCISS\Disk&VEN_HP&PROD_LOGICAL_VOLUME\6&3a915e4e&0&
0000004000000000

Value 16
  Name:            14
  Type:            REG_SZ
  Data:
HPQCISS\Disk&VEN_HP&PROD_LOGICAL_VOLUME\5&c633b0d&0&0
000014001000000

Value 17
  Name:            15
  Type:            REG_SZ
  Data:
HPQCISS\Disk&VEN_HP&PROD_LOGICAL_VOLUME\6&15200e66&0&
0000004000000000

Value 18
  Name:            16
  Type:            REG_SZ
  Data:
HPQCISS\Disk&VEN_HP&PROD_LOGICAL_VOLUME\6&1ec6bfb6&0&
0000004000000000

Value 19
  Name:            17
  Type:            REG_SZ
  Data:
HPQCISS\Disk&VEN_HP&PROD_LOGICAL_VOLUME\6&2670e50&0&0
000004000000000

Value 20
  Name:            18
  Type:            REG_SZ
  Data:
HPQCISS\Disk&VEN_HP&PROD_LOGICAL_VOLUME\6&345b2707&0&
0000004000000000
```

Web Client Hardware Configuration

```
System Information report written at: 04/18/2005
02:54:11 PM
[System Information]

[ Following are sub-categories of this main category
]

[System Summary]

Item      Value
OS Name   Microsoft Windows 2000 Server
Version   5.0.2195 Service Pack 2 Build 2195
OS Manufacturer     Microsoft Corporation
System Name         CL26
System Manufacturer HP
System Model        ProLiant DL360 G4
System Type         X86-based PC
Processor x86 Family 15 Model 4 Stepping 1
GenuineIntel ~38627 Mhz
Processor x86 Family 15 Model 4 Stepping 1
GenuineIntel ~38627 Mhz
Processor x86 Family 15 Model 4 Stepping 1
GenuineIntel ~38627 Mhz
Processor x86 Family 15 Model 4 Stepping 1
GenuineIntel ~38627 Mhz
BIOS Version        08/26/04
Windows Directory   C:\WINNT
System Directory    C:\WINNT\System32
Boot Device         \Device\Harddisk0\Partition1
Locale    United States
User Name CL26\Administrator
Time Zone Central Daylight Time
Total Physical Memory         1,048,056 KB
Available Physical Memory     785,068 KB
Total Virtual Memory          2,783,200 KB
Available Virtual Memory      2,347,380 KB
Page File Space     1,735,144 KB
Page File C:\pagefile.sys

[Hardware Resources]

[ Following are sub-categories of this main category
]

[Conflicts/Sharing]

Resource  Device
IRQ 16    PCI standard PCI-to-PCI bridge
IRQ 16    PCI standard PCI-to-PCI bridge
IRQ 16    PCI standard PCI-to-PCI bridge
IRQ 16    Standard Universal PCI to USB Host
Controller
IRQ 5     Universal Serial Bus (USB) Controller
IRQ 5     Base System Device
IRQ 5     Base System Device

[DMA]

Channel   Device    Status
7         Direct memory access controller         OK
2         Standard floppy disk controller         OK

[Forced Hardware]

Device    PNP Device ID
No Forced Hardware

[I/O]

Address Range       Device    Status
0x0000-0x0CF7       PCI bus   OK
0x0000-0x0CF7       Direct memory access controller
           OK
0x0D00-0xFFFF       PCI bus   OK
0x4000-0x4FFF       PCI standard PCI-to-PCI bridge
           OK
0x4000-0x4FFF       Smart Array 6i      OK
0x2000-0x201F       Standard Universal PCI to USB
Host Controller     OK
0x2020-0x203F       Standard Universal PCI to USB
Host Controller     OK
```


© 2005 Hewlett-Packard Company. All rights reserved.

```
0x3000-0x30FF       ATI Technologies Inc. RAGE XL PCI
          OK
0x03B0-0x03BB       ATI Technologies Inc. RAGE XL PCI
          OK
0x03C0-0x03DF       ATI Technologies Inc. RAGE XL PCI
          OK
0x1800-0x18FF       Base System Device  OK
0x3400-0x34FF       Base System Device  OK
0x0A79-0x0A79       ISAPNP Read Data Port         OK
0x0279-0x0279       ISAPNP Read Data Port         OK
0x0274-0x0277       ISAPNP Read Data Port         OK
0x0070-0x0077       Motherboard resources         OK
0x0408-0x040F       Motherboard resources         OK
0x04D0-0x04D1       Motherboard resources         OK
0x0020-0x003F       Motherboard resources         OK
0x00A0-0x00BF       Motherboard resources         OK
0x0090-0x009F       Motherboard resources         OK
0x0050-0x0053       Motherboard resources         OK
0x0700-0x071F       Motherboard resources         OK
0x0800-0x083F       Motherboard resources         OK
0x0900-0x097F       Motherboard resources         OK
0x0010-0x001F       Motherboard resources         OK
0x0C80-0x0C83       Motherboard resources         OK
0x0CD4-0x0CD7       Motherboard resources         OK
0x0F50-0x0F58       Motherboard resources         OK
0x02F8-0x02FF       Motherboard resources         OK
0x0040-0x0043       System timer        OK
0x0080-0x008F       Direct memory access controller
          OK
0x00C0-0x00DF       Direct memory access controller
          OK
0x0061-0x0061       System speaker      OK
0x0060-0x0060       Standard 101/102-Key or Microsoft
Natural PS/2 Keyboard         OK
0x0064-0x0064       Standard 101/102-Key or Microsoft
Natural PS/2 Keyboard         OK
0x002E-0x002F       Extended IO Bus     OK
0x004E-0x004F       Extended IO Bus     OK
0x0220-0x025F       Extended IO Bus     OK
0x0280-0x029F       Extended IO Bus     OK
0x03F8-0x03FF       Communications Port (COM1)    OK
0x03F2-0x03F5       Standard floppy disk controller
          OK
0x03F7-0x03F7       Standard floppy disk controller
          OK
0x0500-0x050F       Standard Dual Channel PCI IDE
Controller          OK
0x01F0-0x01F7       Primary IDE Channel OK
0x03F6-0x03F6       Primary IDE Channel OK
0x0170-0x0177       Secondary IDE Channel         OK
0x0376-0x0376       Secondary IDE Channel         OK

[IRQs]

IRQ Number          Device
9         Microsoft ACPI-Compliant System
16        PCI standard PCI-to-PCI bridge
16        PCI standard PCI-to-PCI bridge
16        PCI standard PCI-to-PCI bridge
16        Standard Universal PCI to USB Host
Controller
24        Smart Array 6i
25        HP NC7782 Gigabit Server Adapter
26        HP NC7782 Gigabit Server Adapter #2
19        Standard Universal PCI to USB Host
Controller
5         Universal Serial Bus (USB) Controller
5         Base System Device
5         Base System Device
1         Standard 101/102-Key or Microsoft Natural
PS/2 Keyboard
12        PS/2 Compatible Mouse
4         Communications Port (COM1)
6         Standard floppy disk controller
14        Primary IDE Channel

[Memory]

Range     Device    Status
0xA0000-0xBFFFF     PCI bus   OK
0xA0000-0xBFFFF     ATI Technologies Inc. RAGE XL PCI
          OK
0x40000000-0xFEBFFFFF         PCI bus   OK
0xFDF00000-0xFDFFFFFF         PCI standard PCI-to-PCI
bridge    OK
0xFDFF0000-0xFDFF1FFF         Smart Array 6i      OK
0xFDF80000-0xFDFBFFFF         Smart Array 6i      OK
0xFDF70000-0xFDF7FFFF         HP NC7782 Gigabit
Server Adapter      OK
0xFDF60000-0xFDF6FFFF         HP NC7782 Gigabit
Server Adapter #2   OK
0xFBEF0000-0xFBEF000F         Intel(R) 6300ESB
Watchdog Timer - 25AB         OK
0xFBEE0000-0xFBEE03FF         Universal Serial Bus
(USB) Controller    OK
0xFC000000-0xFCFFFFFF         ATI Technologies Inc.
RAGE XL PCI         OK
0xFBFF0000-0xFBFF0FFF         ATI Technologies Inc.
RAGE XL PCI         OK
0xFBFE0000-0xFBFE01FF         Base System Device  OK
0xFBFD0000-0xFBFD07FF         Base System Device  OK
0xFBFC0000-0xFBFC1FFF         Base System Device  OK
0xFBF00000-0xFBF7FFFF         Base System Device  OK
0xE0000000-0xEFFFFFFF         Motherboard resources
          OK
0xFEBFFC00-0xFEBFFFFF         Standard Dual Channel
PCI IDE Controller  OK

[Components]

[ Following are sub-categories of this main category
]

[Multimedia]

[ Following are sub-categories of this main category
]

[Audio Codecs]

Codec     Manufacturer        Description
          Status    File      Version   Size
          Creation Date
c:\winnt\system32\tssoft32.acm          DSP GROUP,
INC.                OK
          C:\WINNT\System32\TSSOFT32.ACM
          1.01      9.27 KB (9,488 bytes)
          12/7/1999 7:00:00 AM
c:\winnt\system32\iac25_32.ax Intel Corporation
          Indeo® audio software         OK
          C:\WINNT\System32\IAC25_32.AX 2.05.53
          195.00 KB (199,680 bytes)     12/7/1999
7:00:00 AM
c:\winnt\system32\msg711.acm  Microsoft Corporation
                    OK
          C:\WINNT\System32\MSG711.ACM  5.00.2134.1
          10.27 KB (10,512 bytes)       12/7/1999
7:00:00 AM
c:\winnt\system32\msg723.acm  Microsoft Corporation
                    OK
          C:\WINNT\System32\MSG723.ACM  4.4.3385
          106.77 KB (109,328 bytes)     9/13/2002
5:46:03 PM
c:\winnt\system32\msgsm32.acm Microsoft Corporation
                    OK
          C:\WINNT\System32\MSGSM32.ACM 5.00.2134.1
          22.27 KB (22,800 bytes)       12/7/1999
7:00:00 AM
c:\winnt\system32\lhacm.acm   Microsoft Corporation
                    OK
          C:\WINNT\System32\LHACM.ACM   4.4.3385
          33.27 KB (34,064 bytes)       9/13/2002
5:46:04 PM
c:\winnt\system32\imaadp32.acm          Microsoft
Corporation                 OK
          C:\WINNT\System32\IMAADP32.ACM
          5.00.2134.1         16.27 KB (16,656 bytes)
          12/7/1999 7:00:00 AM
c:\winnt\system32\msadp32.acm Microsoft Corporation
                    OK
          C:\WINNT\System32\MSADP32.ACM 5.00.2134.1
          14.77 KB (15,120 bytes)       12/7/1999
7:00:00 AM

[Video Codecs]

Codec     Manufacturer        Description
          Status    File      Version   Size
          Creation Date
c:\winnt\system32\ir50_32.dll Intel Corporation
          Indeo® video 5.10   OK
          C:\WINNT\System32\IR50_32.DLL
          R.5.10.15.2.55      737.50 KB (755,200
bytes)    12/7/1999 7:00:00 AM
c:\winnt\system32\msh261.drv  Microsoft Corporation
                    OK
          C:\WINNT\System32\MSH261.DRV  4.4.3385
          163.77 KB (167,696 bytes)     9/13/2002
5:46:04 PM
c:\winnt\system32\msh263.drv  Microsoft Corporation
                    OK
          C:\WINNT\System32\MSH263.DRV  4.4.3385
          252.27 KB (258,320 bytes)     9/13/2002
5:45:39 PM
c:\winnt\system32\ir32_32.dll Intel(R) Corporation
                    OK
          C:\WINNT\System32\IR32_32.DLL Not Available
          194.50 KB (199,168 bytes)     12/7/1999
7:00:00 AM
```


© 2005 Hewlett-Packard Company. All rights reserved.

```
c:\winnt\system32\msrle32.dll Microsoft Corporation
                    OK
          C:\WINNT\System32\MSRLE32.DLL 5.00.2134.1
          10.77 KB (11,024 bytes)       12/7/1999
7:00:00 AM
c:\winnt\system32\msvidc32.dll          Microsoft
Corporation                    OK
          C:\WINNT\System32\MSVIDC32.DLL
          5.00.2134.1         27.27 KB (27,920 bytes)
          12/7/1999 7:00:00 AM
c:\winnt\system32\iccvid.dll  Radius Inc.
          OK        C:\WINNT\System32\ICCVID.DLL
          1.10.0.6  108.00 KB (110,592 bytes)
          12/7/1999 7:00:00 AM

[CD-ROM]

Item      Value
Drive     D:
Description         CD-ROM Drive
Media Loaded        False
Media Type          CD-ROM
Name      COMPAQ CD-ROM SN-124
Manufacturer        (Standard CD-ROM drives)
Status    OK
Transfer Rate       Not Available
SCSI Target ID      0
PNP Device ID       IDE\CDROMCOMPAQ_CD-ROM_SN-
124_____________________N104____\5&180B77CF&0&0.0.0


[Sound Device]

Item      Value
No sound devices

[Display]

Item      Value
Name      ATI Technologies Inc. RAGE XL PCI
PNP Device ID
          PCI\VEN_1002&DEV_4752&SUBSYS_001E0E11&REV_2
7\4&2183A681&0&18F0
Adapter Type        ATI RAGE XL PCI, ATI Technologies
Inc. compatible
Adapter Description ATI Technologies Inc. RAGE XL PCI
Adapter RAM         8.00 MB (8,388,608 bytes)
Installed Drivers   atidrab.dll
Driver Version      5.00.2179.1
INF File  display.inf (atirage3 section)
Color Planes        1
Color Table Entries 65536
Resolution          640 x 480 x 60 hertz
Bits/Pixel          16


[Infrared]

Item      Value
No infrared devices

[Input]

[ Following are sub-categories of this main category
]

[Keyboard]

Item      Value
Description         Standard 101/102-Key or Microsoft
Natural PS/2 Keyboard
Name      Enhanced (101- or 102-key)
Layout    00000409
PNP Device ID       ACPI\PNP0303\4&1F443D2A&0
NumberOfFunctionKeys          12


[Pointing Device]

Item      Value
Hardware Type       PS/2 Compatible Mouse
Number of Buttons   2
Status    OK
PNP Device ID       ACPI\PNP0F13\4&1F443D2A&0
Power Management Supported    False
Double Click Threshold        6
Handedness          Right Handed Operation


[Modem]

Item      Value
No modems

[Network]

[ Following are sub-categories of this main category
]

[Adapter]

Item      Value
Name      [00000000] RAS Async Adapter
Adapter Type        Not Available
Product Name        RAS Async Adapter
Installed True
PNP Device ID       Not Available
Last Reset          4/12/2005 1:53:20 PM
Index     0
Service Name        AsyncMac
IP Address          Not Available
IP Subnet Not Available
Default IP Gateway  Not Available
DHCP Enabled        False
DHCP Server         Not Available
DHCP Lease Expires  Not Available
DHCP Lease Obtained Not Available
MAC Address         Not Available
Service Name        Not Available

Name      [00000001] WAN Miniport (L2TP)
Adapter Type        Not Available
Product Name        WAN Miniport (L2TP)
Installed True
PNP Device ID       ROOT\MS_L2TPMINIPORT\0000
Last Reset          4/12/2005 1:53:20 PM
Index     1
Service Name        Rasl2tp
IP Address          Not Available
IP Subnet Not Available
Default IP Gateway  Not Available
DHCP Enabled        False
DHCP Server         Not Available
DHCP Lease Expires  Not Available
DHCP Lease Obtained Not Available
MAC Address         Not Available
Service Name        Rasl2tp
Driver    c:\winnt\system32\drivers\rasl2tp.sys
(50800, 5.00.2179.1)

Name      [00000002] WAN Miniport (PPTP)
Adapter Type        Wide Area Network (WAN)
Product Name        WAN Miniport (PPTP)
Installed True
PNP Device ID       ROOT\MS_PPTPMINIPORT\0000
Last Reset          4/12/2005 1:53:20 PM
Index     2
Service Name        PptpMiniport
IP Address          Not Available
IP Subnet Not Available
Default IP Gateway  Not Available
DHCP Enabled        False
DHCP Server         Not Available
DHCP Lease Expires  Not Available
DHCP Lease Obtained Not Available
MAC Address         50:50:54:50:30:30
Service Name        PptpMiniport
Driver    c:\winnt\system32\drivers\raspptp.sys
(47856, 5.00.2160.1)

Name      [00000003] Direct Parallel
Adapter Type        Not Available
Product Name        Direct Parallel
Installed True
PNP Device ID       ROOT\MS_PTIMINIPORT\0000
Last Reset          4/12/2005 1:53:20 PM
Index     3
Service Name        Raspti
IP Address          Not Available
IP Subnet Not Available
Default IP Gateway  Not Available
DHCP Enabled        False
DHCP Server         Not Available
DHCP Lease Expires  Not Available
DHCP Lease Obtained Not Available
MAC Address         Not Available
Service Name        Raspti
Driver    c:\winnt\system32\drivers\raspti.sys
(16880, 5.00.2146.1)

Name      [00000004] WAN Miniport (IP)
Adapter Type        Not Available
Product Name        WAN Miniport (IP)
Installed True
PNP Device ID       ROOT\MS_NDISWANIP\0000
Last Reset          4/12/2005 1:53:20 PM
Index     4
Service Name        NdisWan
IP Address          Not Available
```


© 2005 Hewlett-Packard Company. All rights reserved.

```
IP Subnet Not Available
Default IP Gateway  Not Available
DHCP Enabled        False
DHCP Server         Not Available
DHCP Lease Expires  Not Available
DHCP Lease Obtained Not Available
MAC Address         Not Available
Service Name        NdisWan
Driver    c:\winnt\system32\drivers\ndiswan.sys
(90096, 5.00.2195.2779)

Name      [00000005] Compaq NC7780 Gigabit Server
Adapter
Adapter Type        Not Available
Product Name        Compaq NC7780 Gigabit Server
Adapter
Installed True
PNP Device ID       Not Available
Last Reset          4/12/2005 1:53:20 PM
Index     5
Service Name        q57w2k
IP Address          130.172.11.26
IP Subnet 255.255.0.0
Default IP Gateway  Not Available
DHCP Enabled        True
DHCP Server         130.168.253.2
DHCP Lease Expires  9/16/2002 7:03:07 PM
DHCP Lease Obtained 9/15/2002 7:03:07 PM
MAC Address         00:12:79:3A:9D:3B
Service Name        Not Available

Name      [00000006] Compaq NC7780 Gigabit Server
Adapter
Adapter Type        Not Available
Product Name        Compaq NC7780 Gigabit Server
Adapter
Installed True
PNP Device ID       Not Available
Last Reset          4/12/2005 1:53:20 PM
Index     6
Service Name        q57w2k
IP Address          130.168.40.26
IP Subnet 255.255.0.0
Default IP Gateway  Not Available
DHCP Enabled        False
DHCP Server         Not Available
DHCP Lease Expires  Not Available
DHCP Lease Obtained Not Available
MAC Address         00:12:79:3A:9D:3A
Service Name        Not Available

Name      [00000007] Compaq NC3123 Fast Ethernet NIC
Adapter Type        Not Available
Product Name        Compaq NC3123 Fast Ethernet NIC
Installed True
PNP Device ID       Not Available
Last Reset          4/12/2005 1:53:20 PM
Index     7
Service Name        N100
IP Address          130.168.40.26
IP Subnet 255.255.0.0
Default IP Gateway  Not Available
DHCP Enabled        True
DHCP Server         130.168.253.2
DHCP Lease Expires  9/16/2002 3:58:55 PM
DHCP Lease Obtained 9/15/2002 3:58:55 PM
MAC Address         00:12:79:3A:9D:3A
Service Name        Not Available

Name      [00000008] Compaq NC7781 Gigabit Server
Adapter
Adapter Type        Not Available
Product Name        Compaq NC7781 Gigabit Server
Adapter
Installed True
PNP Device ID       Not Available
Last Reset          4/12/2005 1:53:20 PM
Index     8
Service Name        q57w2k
IP Address          130.168.40.26
IP Subnet 255.255.0.0
Default IP Gateway  Not Available
DHCP Enabled        False
DHCP Server         Not Available
DHCP Lease Expires  Not Available
DHCP Lease Obtained Not Available
MAC Address         00:12:79:3A:9D:3A
Service Name        Not Available

Name      [00000009] Compaq NC7781 Gigabit Server
Adapter
Adapter Type        Not Available
Product Name        Compaq NC7781 Gigabit Server
Adapter
Installed True
PNP Device ID       Not Available
Last Reset          4/12/2005 1:53:20 PM
Index     9
Service Name        q57w2k
IP Address          130.172.11.26
IP Subnet 255.255.0.0
Default IP Gateway  Not Available
DHCP Enabled        False
DHCP Server         Not Available
DHCP Lease Expires  Not Available
DHCP Lease Obtained Not Available
MAC Address         00:12:79:3A:9D:3B
Service Name        Not Available

Name      [00000010] HP NC7782 Gigabit Server Adapter
Adapter Type        Ethernet 802.3
Product Name        HP NC7782 Gigabit Server Adapter
Installed True
PNP Device ID
          PCI\VEN_14E4&DEV_1648&SUBSYS_00D00E11&REV_1
0\4&19638ECB&0&10E0
Last Reset          4/12/2005 1:53:20 PM
Index     10
Service Name        q57w2k
IP Address          130.172.11.26
IP Subnet 255.255.0.0
Default IP Gateway  Not Available
DHCP Enabled        False
DHCP Server         Not Available
DHCP Lease Expires  Not Available
DHCP Lease Obtained Not Available
MAC Address         00:12:79:3A:9D:3B
Service Name        q57w2k
IRQ Number          25
Driver    c:\winnt\system32\drivers\q57w2k.sys
(192247, 7.80.0.0)

Name      [00000011] HP NC7782 Gigabit Server Adapter
Adapter Type        Ethernet 802.3
Product Name        HP NC7782 Gigabit Server Adapter
Installed True
PNP Device ID
          PCI\VEN_14E4&DEV_1648&SUBSYS_00D00E11&REV_1
0\4&19638ECB&0&11E0
Last Reset          4/12/2005 1:53:20 PM
Index     11
Service Name        q57w2k
IP Address          130.168.40.26
IP Subnet 255.255.0.0
Default IP Gateway  Not Available
DHCP Enabled        False
DHCP Server         Not Available
DHCP Lease Expires  Not Available
DHCP Lease Obtained Not Available
MAC Address         00:12:79:3A:9D:3A
Service Name        q57w2k
IRQ Number          26
Driver    c:\winnt\system32\drivers\q57w2k.sys
(192247, 7.80.0.0)


[Protocol]

Item      Value
Name      MSAFD Tcpip [TCP/IP]
ConnectionlessService         False
GuaranteesDelivery  True
GuaranteesSequencing          True
MaximumAddressSize  16 bytes
MaximumMessageSize  0 bytes
MessageOriented     False
MinimumAddressSize  16 bytes
PseudoStreamOriented          False
SupportsBroadcasting          False
SupportsConnectData False
SupportsDisconnectData        False
SupportsEncryption  False
SupportsExpeditedData         True
SupportsGracefulClosing       True
SupportsGuaranteedBandwidth   False
SupportsMulticasting          False

Name      MSAFD Tcpip [UDP/IP]
ConnectionlessService         True
GuaranteesDelivery  False
GuaranteesSequencing          False
MaximumAddressSize  16 bytes
MaximumMessageSize  65467 bytes
MessageOriented     True
MinimumAddressSize  16 bytes
PseudoStreamOriented          False
SupportsBroadcasting          True
SupportsConnectData False
SupportsDisconnectData        False
```


© 2005 Hewlett-Packard Company. All rights reserved.

```
SupportsEncryption  False
SupportsExpeditedData         False
SupportsGracefulClosing       False
SupportsGuaranteedBandwidth   False
SupportsMulticasting          True

Name      RSVP UDP Service Provider
ConnectionlessService         True
GuaranteesDelivery  False
GuaranteesSequencing          False
MaximumAddressSize  16 bytes
MaximumMessageSize  65467 bytes
MessageOriented     True
MinimumAddressSize  16 bytes
PseudoStreamOriented          False
SupportsBroadcasting          True
SupportsConnectData False
SupportsDisconnectData        False
SupportsEncryption  True
SupportsExpeditedData         False
SupportsGracefulClosing       False
SupportsGuaranteedBandwidth   False
SupportsMulticasting          True

Name      RSVP TCP Service Provider
ConnectionlessService         False
GuaranteesDelivery  True
GuaranteesSequencing          True
MaximumAddressSize  16 bytes
MaximumMessageSize  0 bytes
MessageOriented     False
MinimumAddressSize  16 bytes
PseudoStreamOriented          False
SupportsBroadcasting          False
SupportsConnectData False
SupportsDisconnectData        False
SupportsEncryption  True
SupportsExpeditedData         True
SupportsGracefulClosing       True
SupportsGuaranteedBandwidth   False
SupportsMulticasting          False

Name      MSAFD NetBIOS
[\Device\NetBT_Tcpip_{37E5A54E-FF18-486C-B3AD-
E80449420A01}] SEQPACKET 8
ConnectionlessService         False
GuaranteesDelivery  True
GuaranteesSequencing          True
MaximumAddressSize  20 bytes
MaximumMessageSize  64000 bytes
MessageOriented     True
MinimumAddressSize  20 bytes
PseudoStreamOriented          False
SupportsBroadcasting          False
SupportsConnectData False
SupportsDisconnectData        False
SupportsEncryption  False
SupportsExpeditedData         False
SupportsGracefulClosing       False
SupportsGuaranteedBandwidth   False
SupportsMulticasting          False

Name      MSAFD NetBIOS
[\Device\NetBT_Tcpip_{37E5A54E-FF18-486C-B3AD-
E80449420A01}] DATAGRAM 8
ConnectionlessService         True
GuaranteesDelivery  False
GuaranteesSequencing          False
MaximumAddressSize  20 bytes
MaximumMessageSize  64000 bytes
MessageOriented     True
MinimumAddressSize  20 bytes
PseudoStreamOriented          False
SupportsBroadcasting          True
SupportsConnectData False
SupportsDisconnectData        False
SupportsEncryption  False
SupportsExpeditedData         False
SupportsGracefulClosing       False
SupportsGuaranteedBandwidth   False
SupportsMulticasting          False

Name      MSAFD NetBIOS
[\Device\NetBT_Tcpip_{4D85C014-5E76-48CF-93EA-
317E0F725486}] SEQPACKET 7
ConnectionlessService         False
GuaranteesDelivery  True
GuaranteesSequencing          True
MaximumAddressSize  20 bytes
MaximumMessageSize  64000 bytes
MessageOriented     True
MinimumAddressSize  20 bytes
PseudoStreamOriented          False
SupportsBroadcasting          False
SupportsConnectData False
SupportsDisconnectData        False
SupportsEncryption  False
SupportsExpeditedData         False
SupportsGracefulClosing       False
SupportsGuaranteedBandwidth   False
SupportsMulticasting          False

Name      MSAFD NetBIOS
[\Device\NetBT_Tcpip_{4D85C014-5E76-48CF-93EA-
317E0F725486}] DATAGRAM 7
ConnectionlessService         True
GuaranteesDelivery  False
GuaranteesSequencing          False
MaximumAddressSize  20 bytes
MaximumMessageSize  64000 bytes
MessageOriented     True
MinimumAddressSize  20 bytes
PseudoStreamOriented          False
SupportsBroadcasting          True
SupportsConnectData False
SupportsDisconnectData        False
SupportsEncryption  False
SupportsExpeditedData         False
SupportsGracefulClosing       False
SupportsGuaranteedBandwidth   False
SupportsMulticasting          False

Name      MSAFD NetBIOS
[\Device\NetBT_Tcpip_{2D8AA674-9F13-43EE-9055-
F9ECADD87F7F}] SEQPACKET 6
ConnectionlessService         False
GuaranteesDelivery  True
GuaranteesSequencing          True
MaximumAddressSize  20 bytes
MaximumMessageSize  64000 bytes
MessageOriented     True
MinimumAddressSize  20 bytes
PseudoStreamOriented          False
SupportsBroadcasting          False
SupportsConnectData False
SupportsDisconnectData        False
SupportsEncryption  False
SupportsExpeditedData         False
SupportsGracefulClosing       False
SupportsGuaranteedBandwidth   False
SupportsMulticasting          False

Name      MSAFD NetBIOS
[\Device\NetBT_Tcpip_{2D8AA674-9F13-43EE-9055-
F9ECADD87F7F}] DATAGRAM 6
ConnectionlessService         True
GuaranteesDelivery  False
GuaranteesSequencing          False
MaximumAddressSize  20 bytes
MaximumMessageSize  64000 bytes
MessageOriented     True
MinimumAddressSize  20 bytes
PseudoStreamOriented          False
SupportsBroadcasting          True
SupportsConnectData False
SupportsDisconnectData        False
SupportsEncryption  False
SupportsExpeditedData         False
SupportsGracefulClosing       False
SupportsGuaranteedBandwidth   False
SupportsMulticasting          False

Name      MSAFD NetBIOS
[\Device\NetBT_Tcpip_{EFD5741D-3A14-456C-98EB-
17ABC580A075}] SEQPACKET 5
ConnectionlessService         False
GuaranteesDelivery  True
GuaranteesSequencing          True
MaximumAddressSize  20 bytes
MaximumMessageSize  64000 bytes
MessageOriented     True
MinimumAddressSize  20 bytes
PseudoStreamOriented          False
SupportsBroadcasting          False
SupportsConnectData False
SupportsDisconnectData        False
SupportsEncryption  False
SupportsExpeditedData         False
SupportsGracefulClosing       False
SupportsGuaranteedBandwidth   False
SupportsMulticasting          False

Name      MSAFD NetBIOS
[\Device\NetBT_Tcpip_{EFD5741D-3A14-456C-98EB-
17ABC580A075}] DATAGRAM 5
ConnectionlessService         True
GuaranteesDelivery  False
GuaranteesSequencing          False
```


© 2005 Hewlett-Packard Company. All rights reserved.

```
MaximumAddressSize  20 bytes
MaximumMessageSize  64000 bytes
MessageOriented     True
MinimumAddressSize  20 bytes
PseudoStreamOriented          False
SupportsBroadcasting          True
SupportsConnectData False
SupportsDisconnectData        False
SupportsEncryption  False
SupportsExpeditedData         False
SupportsGracefulClosing       False
SupportsGuaranteedBandwidth   False
SupportsMulticasting          False

Name      MSAFD NetBIOS
[\Device\NetBT_Tcpip_{4249431A-469E-4735-A292-
01AA526741FC}] SEQPACKET 4
ConnectionlessService         False
GuaranteesDelivery  True
GuaranteesSequencing          True
MaximumAddressSize  20 bytes
MaximumMessageSize  64000 bytes
MessageOriented     True
MinimumAddressSize  20 bytes
PseudoStreamOriented          False
SupportsBroadcasting          False
SupportsConnectData False
SupportsDisconnectData        False
SupportsEncryption  False
SupportsExpeditedData         False
SupportsGracefulClosing       False
SupportsGuaranteedBandwidth   False
SupportsMulticasting          False

Name      MSAFD NetBIOS
[\Device\NetBT_Tcpip_{4249431A-469E-4735-A292-
01AA526741FC}] DATAGRAM 4
ConnectionlessService         True
GuaranteesDelivery  False
GuaranteesSequencing          False
MaximumAddressSize  20 bytes
MaximumMessageSize  64000 bytes
MessageOriented     True
MinimumAddressSize  20 bytes
PseudoStreamOriented          False
SupportsBroadcasting          True
SupportsConnectData False
SupportsDisconnectData        False
SupportsEncryption  False
SupportsExpeditedData         False
SupportsGracefulClosing       False
SupportsGuaranteedBandwidth   False
SupportsMulticasting          False

Name      MSAFD NetBIOS
[\Device\NetBT_Tcpip_{3B09DDB7-7EB8-4941-8121-
52DC6359F5A6}] SEQPACKET 3
ConnectionlessService         False
GuaranteesDelivery  True
GuaranteesSequencing          True
MaximumAddressSize  20 bytes
MaximumMessageSize  64000 bytes
MessageOriented     True
MinimumAddressSize  20 bytes
PseudoStreamOriented          False
SupportsBroadcasting          False
SupportsConnectData False
SupportsDisconnectData        False
SupportsEncryption  False
SupportsExpeditedData         False
SupportsGracefulClosing       False
SupportsGuaranteedBandwidth   False
SupportsMulticasting          False

Name      MSAFD NetBIOS
[\Device\NetBT_Tcpip_{3B09DDB7-7EB8-4941-8121-
52DC6359F5A6}] DATAGRAM 3
ConnectionlessService         True
GuaranteesDelivery  False
GuaranteesSequencing          False
MaximumAddressSize  20 bytes
MaximumMessageSize  64000 bytes
MessageOriented     True
MinimumAddressSize  20 bytes
PseudoStreamOriented          False
SupportsBroadcasting          True
SupportsConnectData False
SupportsDisconnectData        False
SupportsEncryption  False
SupportsExpeditedData         False
SupportsGracefulClosing       False
SupportsGuaranteedBandwidth   False
SupportsMulticasting          False

Name      MSAFD NetBIOS
[\Device\NetBT_Tcpip_{684FA660-D082-4A8C-AC8C-
C9D449B21686}] SEQPACKET 0
ConnectionlessService         False
GuaranteesDelivery  True
GuaranteesSequencing          True
MaximumAddressSize  20 bytes
MaximumMessageSize  64000 bytes
MessageOriented     True
MinimumAddressSize  20 bytes
PseudoStreamOriented          False
SupportsBroadcasting          False
SupportsConnectData False
SupportsDisconnectData        False
SupportsEncryption  False
SupportsExpeditedData         False
SupportsGracefulClosing       False
SupportsGuaranteedBandwidth   False
SupportsMulticasting          False

Name      MSAFD NetBIOS
[\Device\NetBT_Tcpip_{684FA660-D082-4A8C-AC8C-
C9D449B21686}] DATAGRAM 0
ConnectionlessService         True
GuaranteesDelivery  False
GuaranteesSequencing          False
MaximumAddressSize  20 bytes
MaximumMessageSize  64000 bytes
MessageOriented     True
MinimumAddressSize  20 bytes
PseudoStreamOriented          False
SupportsBroadcasting          True
SupportsConnectData False
SupportsDisconnectData        False
SupportsEncryption  False
SupportsExpeditedData         False
SupportsGracefulClosing       False
SupportsGuaranteedBandwidth   False
SupportsMulticasting          False

Name      MSAFD NetBIOS
[\Device\NetBT_Tcpip_{D90E04F2-3AD9-4F98-9464-
751E106D7E6A}] SEQPACKET 1
ConnectionlessService         False
GuaranteesDelivery  True
GuaranteesSequencing          True
MaximumAddressSize  20 bytes
MaximumMessageSize  64000 bytes
MessageOriented     True
MinimumAddressSize  20 bytes
PseudoStreamOriented          False
SupportsBroadcasting          False
SupportsConnectData False
SupportsDisconnectData        False
SupportsEncryption  False
SupportsExpeditedData         False
SupportsGracefulClosing       False
SupportsGuaranteedBandwidth   False
SupportsMulticasting          False

Name      MSAFD NetBIOS
[\Device\NetBT_Tcpip_{D90E04F2-3AD9-4F98-9464-
751E106D7E6A}] DATAGRAM 1
ConnectionlessService         True
GuaranteesDelivery  False
GuaranteesSequencing          False
MaximumAddressSize  20 bytes
MaximumMessageSize  64000 bytes
MessageOriented     True
MinimumAddressSize  20 bytes
PseudoStreamOriented          False
SupportsBroadcasting          True
SupportsConnectData False
SupportsDisconnectData        False
SupportsEncryption  False
SupportsExpeditedData         False
SupportsGracefulClosing       False
SupportsGuaranteedBandwidth   False
SupportsMulticasting          False

Name      MSAFD NetBIOS
[\Device\NetBT_Tcpip_{3F1BA297-E685-416B-82D7-
70E771CC8745}] SEQPACKET 2
ConnectionlessService         False
GuaranteesDelivery  True
GuaranteesSequencing          True
MaximumAddressSize  20 bytes
MaximumMessageSize  64000 bytes
MessageOriented     True
MinimumAddressSize  20 bytes
PseudoStreamOriented          False
SupportsBroadcasting          False
SupportsConnectData False
SupportsDisconnectData        False
SupportsEncryption  False
```


© 2005 Hewlett-Packard Company. All rights reserved.

```
SupportsExpeditedData         False
SupportsGracefulClosing       False
SupportsGuaranteedBandwidth   False
SupportsMulticasting          False

Name      MSAFD NetBIOS
[\Device\NetBT_Tcpip_{3F1BA297-E685-416B-82D7-
70E771CC8745}] DATAGRAM 2
ConnectionlessService         True
GuaranteesDelivery  False
GuaranteesSequencing          False
MaximumAddressSize  20 bytes
MaximumMessageSize  64000 bytes
MessageOriented     True
MinimumAddressSize  20 bytes
PseudoStreamOriented          False
SupportsBroadcasting          True
SupportsConnectData False
SupportsDisconnectData        False
SupportsEncryption  False
SupportsExpeditedData         False
SupportsGracefulClosing       False
SupportsGuaranteedBandwidth   False
SupportsMulticasting          False


[WinSock]

Item      Value
File      c:\winnt\system32\winsock.dll
Version   3.10
Size      2.80 KB (2,864 bytes)

File      c:\winnt\system32\wsock32.dll
Version   5.00.2195.2871
Size      21.27 KB (21,776 bytes)


[Ports]

[ Following are sub-categories of this main category
]

[Serial]

Item      Value
Name      COM1
Status    OK
PNP Device ID       ACPI\PNP0501\0
Maximum Input Buffer Size     0
Maximum Output Buffer Size    False
Settable Baud Rate  True
Settable Data Bits  True
Settable Flow Control         True
Settable Parity     True
Settable Parity Check         True
Settable Stop Bits  True
Settable RLSD       True
Supports RLSD       True
Supports 16 Bit Mode          False
Supports Special Characters   False
Baud Rate 9600
Bits/Byte 8
Stop Bits 1
Parity    None
Busy      0
Abort Read/Write on Error     0
Binary Mode Enabled -1
Continue XMit on XOff         0
CTS Outflow Control 0
Discard NULL Bytes  0
DSR Outflow Control 0
DSR Sensitivity     0
DTR Flow Control Type         Enable
EOF Character       0
Error Replace Character       0
Error Replacement Enabled     0
Event Character     0
Parity Check Enabled          0
RTS Flow Control Type         Enable
XOff Character      19
XOffXMit Threshold  512
XOn Character       17
XOnXMit Threshold   2048
XOnXOff InFlow Control        0
XOnXOff OutFlow Control       0
IRQ Number          4
I/O Port  0x03F8-0x03FF
Driver    c:\winnt\system32\drivers\serial.sys
(62416, 5.00.2195.2780)


[Parallel]

Item      Value
No parallel port information

[Storage]

[ Following are sub-categories of this main category
]

[Drives]

Item      Value
Drive     A:
Description         3 1/2 Inch Floppy Drive

Drive     C:
Description         Local Fixed Disk
Compressed          False
File System         NTFS
Size      33.91 GB (36,413,280,256 bytes)
Free Space          31.74 GB (34,077,003,776 bytes)
Volume Name
Volume Serial Number          C8B488FA
Partition Disk #0, Partition #0
Partition Size      33.91 GB (36,413,282,304 bytes)
Starting Offset     32256 bytes
Drive Description   Disk drive
Drive Manufacturer  (Standard disk drives)
Drive Model         HP LOGICAL VOLUME SCSI Disk
Device
Drive BytesPerSector          512
Drive MediaLoaded   True
Drive MediaType     Fixed hard disk media
Drive Partitions    1
Drive SCSIBus       0
Drive SCSILogicalUnit         0
Drive SCSIPort      2
Drive SCSITargetId  4
Drive SectorsPerTrack         63
Drive Size          36413314560 bytes
Drive TotalCylinders          4427
Drive TotalSectors  71119755
Drive TotalTracks   1128885
Drive TracksPerCylinder       255


[SCSI]

Item      Value
Name      Smart Array 6i
Caption   Smart Array 6i
Driver    cpqcissm
Status    OK
PNP Device ID
          PCI\VEN_0E11&DEV_0046&SUBSYS_40910E11&REV_0
1\4&19638ECB&0&08E0
Device ID
          PCI\VEN_0E11&DEV_0046&SUBSYS_40910E11&REV_0
1\4&19638ECB&0&08E0
Device Map          Not Available
Index     Not Available
Max Number Controlled         Not Available
IRQ Number          24
I/O Port  0x4000-0x4FFF
Driver    c:\winnt\system32\drivers\cpqcissm.sys
(16512, 5.64.0.32 Build 7 (x86))


[Printing]

Name      Port Name Server Name
No printing information

[Problem Devices]

Device    PNP Device ID       Error Code
Universal Serial Bus (USB) Controller
          PCI\VEN_8086&DEV_25AD&SUBSYS_32010E11&REV_0
2\3&61AAA01&0&EF    28
Base System Device
          PCI\VEN_0E11&DEV_B203&SUBSYS_B2060E11&REV_0
1\4&2183A681&0&20F0 28
Base System Device
          PCI\VEN_0E11&DEV_B204&SUBSYS_B2060E11&REV_0
1\4&2183A681&0&22F0 28
Standard 101/102-Key or Microsoft Natural PS/2
Keyboard  ACPI\PNP0303\4&1F443D2A&0     24

[USB]

Device    PNP Device ID
Standard Universal PCI to USB Host Controller
          PCI\VEN_8086&DEV_25A9&SUBSYS_32010E11&REV_0
2\3&61AAA01&0&E8
USB Root Hub        USB\ROOT_HUB\4&312B1C17&0
```


© 2005 Hewlett-Packard Company. All rights reserved.

```
Standard Universal PCI to USB Host Controller
          PCI\VEN_8086&DEV_25AA&SUBSYS_32010E11&REV_0
2\3&61AAA01&0&E9
USB Root Hub        USB\ROOT_HUB\4&24B43ADC&0

[Software Environment]

[ Following are sub-categories of this main category
]

[Drivers]

Name      Description         File      Type
          Started   Start Mode          State
          Status    Error Control       Accept Pause
          Accept Stop
abiosdsk  Abiosdsk  Not Available       Kernel Driver
          False     Disabled  Stopped   OK
          Ignore    False     False
abp480n5  abp480n5  Not Available       Kernel Driver
          False     Disabled  Stopped   OK
          Normal    False     False
acpi      Microsoft ACPI Driver
          c:\winnt\system32\drivers\acpi.sys
          Kernel Driver       True      Boot
          Running   OK        Normal    False
          True
acpiec    ACPIEC
          c:\winnt\system32\drivers\acpiec.sys
          Kernel Driver       False     Disabled
          Stopped   OK        Normal    False
          False
adpu160m  adpu160m  Not Available       Kernel Driver
          False     Disabled  Stopped   OK
          Normal    False     False
afd       AFD Networking Support Environment
          c:\winnt\system32\drivers\afd.sys
          Kernel Driver       True      Auto
          Running   OK        Normal    False
          True
aha154x   Aha154x   Not Available       Kernel Driver
          False     Disabled  Stopped   OK
          Normal    False     False
aic116x   aic116x   Not Available       Kernel Driver
          False     Disabled  Stopped   OK
          Normal    False     False
aic78u2   aic78u2   Not Available       Kernel Driver
          False     Disabled  Stopped   OK
          Normal    False     False
aic78xx   aic78xx   Not Available       Kernel Driver
          False     Disabled  Stopped   OK
          Normal    False     False
alkernel  Altiris Kernel Driver
          c:\winnt\system32\drivers\alkernel.sys
          Kernel Driver       True      Manual
          Running   OK        Normal    False
          True
ami0nt    ami0nt    Not Available       Kernel Driver
          False     Disabled  Stopped   OK
          Normal    False     False
amsint    amsint    Not Available       Kernel Driver
          False     Disabled  Stopped   OK
          Normal    False     False
asc       asc       Not Available       Kernel Driver
          False     Disabled  Stopped   OK
          Normal    False     False
asc3350p  asc3350p  Not Available       Kernel Driver
          False     Disabled  Stopped   OK
          Normal    False     False
asc3550   asc3550   Not Available       Kernel Driver
          False     Disabled  Stopped   OK
          Normal    False     False
asyncmac  RAS Asynchronous Media Driver
          c:\winnt\system32\drivers\asyncmac.sys
          Kernel Driver       False     Manual
          Stopped   OK        Normal    False
          False
atapi     Standard IDE/ESDI Hard Disk Controller
          c:\winnt\system32\drivers\atapi.sys
          Kernel Driver       True      Boot
          Running   OK        Normal    False
          True
atdisk    Atdisk    Not Available       Kernel Driver
          False     Disabled  Stopped   OK
          Ignore    False     False
atirage3  atirage3
          c:\winnt\system32\drivers\atimpab.sys
          Kernel Driver       True      Manual
          Running   OK        Ignore    False
          True
atmarpc   ATM ARP Client Protocol
          c:\winnt\system32\drivers\atmarpc.sys
          Kernel Driver       False     Manual
          Stopped   OK        Normal    False
          False
audstub   Audio Stub Driver
          c:\winnt\system32\drivers\audstub.sys
          Kernel Driver       True      Manual
          Running   OK        Normal    False
          True
beep      Beep
          c:\winnt\system32\drivers\beep.sys
          Kernel Driver       True      System
          Running   OK        Normal    False
          True
buslogic  BusLogic  Not Available       Kernel Driver
          False     Disabled  Stopped   OK
          Normal    False     False
cd20xrnt  cd20xrnt  Not Available       Kernel Driver
          False     Disabled  Stopped   OK
          Normal    False     False
cdaudio   Cdaudio
          c:\winnt\system32\drivers\cdaudio.sys
          Kernel Driver       False     System
          Stopped   OK        Ignore    False
          False
cdfs      Cdfs
          c:\winnt\system32\drivers\cdfs.sys
          File System Driver  True      Disabled
          Running   OK        Normal    False
          True
cdrom     CD-ROM Driver
          c:\winnt\system32\drivers\cdrom.sys
          Kernel Driver       True      System
          Running   OK        Normal    False
          True
changer   Changer   Not Available       Kernel Driver
          False     System    Stopped   OK
          Ignore    False     False
cpqarray  Cpqarray  Not Available       Kernel Driver
          False     Disabled  Stopped   OK
          Normal    False     False
cpqarry2  cpqarry2  Not Available       Kernel Driver
          False     Disabled  Stopped   OK
          Normal    False     False
cpqcissm  cpqcissm
          c:\winnt\system32\drivers\cpqcissm.sys
          Kernel Driver       True      Boot
          Running   OK        Normal    False
          True
cpqfcalm  cpqfcalm  Not Available       Kernel Driver
          False     Disabled  Stopped   OK
          Normal    False     False
cpqfws2e  cpqfws2e  Not Available       Kernel Driver
          False     Disabled  Stopped   OK
          Normal    False     False
dac960nt  dac960nt  Not Available       Kernel Driver
          False     Disabled  Stopped   OK
          Normal    False     False
deckzpsx  deckzpsx  Not Available       Kernel Driver
          False     Disabled  Stopped   OK
          Normal    False     False
dfsdriver DfsDriver c:\winnt\system32\drivers\dfs.sys
          File System Driver  True      Boot
          Running   OK        Normal    False
          True
disk      Disk Driver
          c:\winnt\system32\drivers\disk.sys
          Kernel Driver       True      Boot
          Running   OK        Normal    False
          True
diskperf  Diskperf
          c:\winnt\system32\drivers\diskperf.sys
          Kernel Driver       True      Boot
          Running   OK        Normal    False
          True
dmboot    dmboot
          c:\winnt\system32\drivers\dmboot.sys
          Kernel Driver       False     Disabled
          Stopped   OK        Normal    False
          False
dmio      Logical Disk Manager Driver
          c:\winnt\system32\drivers\dmio.sys
          Kernel Driver       True      Boot
          Running   OK        Normal    False
          True
dmload    dmload
          c:\winnt\system32\drivers\dmload.sys
          Kernel Driver       True      Boot
          Running   OK        Normal    False
          True
efs       EFS       c:\winnt\system32\drivers\efs.sys
          File System Driver  True      Disabled
          Running   OK        Normal    False
          True
fastfat   Fastfat
          c:\winnt\system32\drivers\fastfat.sys
          File System Driver  True      Disabled
```


© 2005 Hewlett-Packard Company. All rights reserved.

```
          Running   OK        Normal    False
          True
fd16_700  Fd16_700  Not Available       Kernel Driver
          False     Disabled  Stopped   OK
          Normal    False     False
fdc       Floppy Disk Controller Driver
          c:\winnt\system32\drivers\fdc.sys
          Kernel Driver       True      Manual
          Running   OK        Normal    False
          True
fips      Fips
          c:\winnt\system32\drivers\fips.sys
          Kernel Driver       True      Auto
          Running   OK        Normal    False
          True
fireport  fireport  Not Available       Kernel Driver
          False     Disabled  Stopped   OK
          Normal    False     False
flashpnt  flashpnt  Not Available       Kernel Driver
          False     Disabled  Stopped   OK
          Normal    False     False
flpydisk  Floppy Disk Driver
          c:\winnt\system32\drivers\flpydisk.sys
          Kernel Driver       True      Manual
          Running   OK        Normal    False
          True
ftdisk    Volume Manager Driver
          c:\winnt\system32\drivers\ftdisk.sys
          Kernel Driver       True      Boot
          Running   OK        Normal    False
          True
gpc       Generic Packet Classifier
          c:\winnt\system32\drivers\msgpc.sys
          Kernel Driver       True      Manual
          Running   OK        Normal    False
          True
i8042prt  i8042 Keyboard and PS/2 Mouse Port Driver
          c:\winnt\system32\drivers\i8042prt.sys
          Kernel Driver       True      System
          Running   OK        Normal    False
          True
ini910u   ini910u   Not Available       Kernel Driver
          False     Disabled  Stopped   OK
          Normal    False     False
intelide  IntelIde  Not Available       Kernel Driver
          False     Disabled  Stopped   OK
          Normal    False     False
ipfilterdriver      IP Traffic Filter Driver
          c:\winnt\system32\drivers\ipfltdrv.sys
          Kernel Driver       False     Manual
          Stopped   OK        Normal    False
          False
ipinip    IP in IP Tunnel Driver
          c:\winnt\system32\drivers\ipinip.sys
          Kernel Driver       False     Manual
          Stopped   OK        Normal    False
          False
ipnat     IP Network Address Translator
          c:\winnt\system32\drivers\ipnat.sys
          Kernel Driver       False     Manual
          Stopped   OK        Normal    False
          False
ipsec     IPSEC driver
          c:\winnt\system32\drivers\ipsec.sys
          Kernel Driver       True      Manual
          Running   OK        Normal    False
          True
ipsraidn  ipsraidn  Not Available       Kernel Driver
          False     Disabled  Stopped   OK
          Normal    False     False
isapnp    PnP ISA/EISA Bus Driver
          c:\winnt\system32\drivers\isapnp.sys
          Kernel Driver       True      Boot
          Running   OK        Critical  False
          True
kbdclass  Keyboard Class Driver
          c:\winnt\system32\drivers\kbdclass.sys
          Kernel Driver       True      System
          Running   OK        Normal    False
          True
ksecdd    KSecDD
          c:\winnt\system32\drivers\ksecdd.sys
          Kernel Driver       True      Boot
          Running   OK        Normal    False
          True
lbrtfdc   lbrtfdc   Not Available       Kernel Driver
          False     System    Stopped   OK
          Ignore    False     False
lp6nds35  lp6nds35  Not Available       Kernel Driver
          False     Disabled  Stopped   OK
          Normal    False     False
mnmdd     mnmdd
          c:\winnt\system32\drivers\mnmdd.sys
          Kernel Driver       True      System
          Running   OK        Ignore    False
          True
modem     Modem
          c:\winnt\system32\drivers\modem.sys
          Kernel Driver       False     Manual
          Stopped   OK        Ignore    False
          False
mouclass  Mouse Class Driver
          c:\winnt\system32\drivers\mouclass.sys
          Kernel Driver       True      System
          Running   OK        Normal    False
          True
mountmgr  MountMgr
          c:\winnt\system32\drivers\mountmgr.sys
          Kernel Driver       True      Boot
          Running   OK        Normal    False
          True
mraid35x  mraid35x  Not Available       Kernel Driver
          False     Disabled  Stopped   OK
          Normal    False     False
mrxsmb    MRXSMB
          c:\winnt\system32\drivers\mrxsmb.sys
          File System Driver  True      System
          Running   OK        Normal    False
          True
msfs      Msfs
          c:\winnt\system32\drivers\msfs.sys
          File System Driver  True      System
          Running   OK        Normal    False
          True
msksssrv  Microsoft Streaming Service Proxy
          c:\winnt\system32\drivers\msksssrv.sys
          Kernel Driver       False     Manual
          Stopped   OK        Normal    False
          False
mspclock  Microsoft Streaming Clock Proxy
          c:\winnt\system32\drivers\mspclock.sys
          Kernel Driver       False     Manual
          Stopped   OK        Normal    False
          False
mspqm     Microsoft Streaming Quality Manager Proxy
          c:\winnt\system32\drivers\mspqm.sys
          Kernel Driver       False     Manual
          Stopped   OK        Normal    False
          False
mup       Mup       c:\winnt\system32\drivers\mup.sys
          File System Driver  True      Boot
          Running   OK        Normal    False
          True
n100      Compaq Ethernet or Fast Ethernet NIC NT
Driver    c:\winnt\system32\drivers\n100nt5.sys
          Kernel Driver       False     Manual
          Stopped   OK        Normal    False
          False
ncrc710   Ncrc710   Not Available       Kernel Driver
          False     Disabled  Stopped   OK
          Normal    False     False
ndis      NDIS System Driver
          c:\winnt\system32\drivers\ndis.sys
          Kernel Driver       True      Boot
          Running   OK        Normal    False
          True
ndistapi  Remote Access NDIS TAPI Driver
          c:\winnt\system32\drivers\ndistapi.sys
          Kernel Driver       True      Manual
          Running   OK        Normal    False
          True
ndiswan   Remote Access NDIS WAN Driver
          c:\winnt\system32\drivers\ndiswan.sys
          Kernel Driver       True      Manual
          Running   OK        Normal    False
          True
ndproxy   NDIS Proxy
          c:\winnt\system32\drivers\ndproxy.sys
          Kernel Driver       True      Manual
          Running   OK        Normal    False
          True
netbios   NetBIOS Interface
          c:\winnt\system32\drivers\netbios.sys
          File System Driver  True      System
          Running   OK        Normal    False
          True
netbt     NetBios over Tcpip
          c:\winnt\system32\drivers\netbt.sys
          Kernel Driver       True      System
          Running   OK        Normal    False
          True
netdetect NetDetect
          c:\winnt\system32\drivers\netdtect.sys
          Kernel Driver       False     Manual
          Stopped   OK        Normal    False
          False
```


© 2005 Hewlett-Packard Company. All rights reserved.

```
npfs      Npfs
          c:\winnt\system32\drivers\npfs.sys
          File System Driver  True      System
          Running   OK        Normal    False
          True
ntfs      Ntfs
          c:\winnt\system32\drivers\ntfs.sys
          File System Driver  True      Disabled
          Running   OK        Normal    False
          True
null      Null
          c:\winnt\system32\drivers\null.sys
          Kernel Driver       True      System
          Running   OK        Normal    False
          True
nwlnkflt  IPX Traffic Filter Driver
          c:\winnt\system32\drivers\nwlnkflt.sys
          Kernel Driver       False     Manual
          Stopped   OK        Normal    False
          False
nwlnkfwd  IPX Traffic Forwarder Driver
          c:\winnt\system32\drivers\nwlnkfwd.sys
          Kernel Driver       False     Manual
          Stopped   OK        Normal    False
          False
openhci   Microsoft USB Open Host Controller Driver
          c:\winnt\system32\drivers\openhci.sys
          Kernel Driver       False     Manual
          Stopped   OK        Normal    False
          False
parallel  Parallel
          c:\winnt\system32\drivers\parallel.sys
          Kernel Driver       False     Auto
          Stopped   OK        Ignore    False
          False
parport   Parport
          c:\winnt\system32\drivers\parport.sys
          Kernel Driver       False     Auto
          Stopped   OK        Ignore    False
          False
partmgr   PartMgr
          c:\winnt\system32\drivers\partmgr.sys
          Kernel Driver       True      Boot
          Running   OK        Normal    False
          True
parvdm    ParVdm
          c:\winnt\system32\drivers\parvdm.sys
          Kernel Driver       False     Auto
          Stopped   OK        Ignore    False
          False
pci       PCI Bus Driver
          c:\winnt\system32\drivers\pci.sys
          Kernel Driver       True      Boot
          Running   OK        Critical  False
          True
pcidump   PCIDump   Not Available       Kernel Driver
          False     System    Stopped   OK
          Ignore    False     False
pciide    PCIIde
          c:\winnt\system32\drivers\pciide.sys
          Kernel Driver       True      Boot
          Running   OK        Normal    False
          True
pcmcia    Pcmcia
          c:\winnt\system32\drivers\pcmcia.sys
          Kernel Driver       False     Disabled
          Stopped   OK        Normal    False
          False
pdcomp    PDCOMP    Not Available       Kernel Driver
          False     Manual    Stopped   OK
          Ignore    False     False
pdframe   PDFRAME   Not Available       Kernel Driver
          False     Manual    Stopped   OK
          Ignore    False     False
pdreli    PDRELI    Not Available       Kernel Driver
          False     Manual    Stopped   OK
          Ignore    False     False
pdrframe  PDRFRAME  Not Available       Kernel Driver
          False     Manual    Stopped   OK
          Ignore    False     False
pptpminiport        WAN Miniport (PPTP)
          c:\winnt\system32\drivers\raspptp.sys
          Kernel Driver       True      Manual
          Running   OK        Normal    False
          True
ptilink   Direct Parallel Link Driver
          c:\winnt\system32\drivers\ptilink.sys
          Kernel Driver       True      Manual
          Running   OK        Normal    False
          True
q57w2k    HP NC7782 Gigabit Server Adapter
          c:\winnt\system32\drivers\q57w2k.sys
          Kernel Driver       True      Manual
          Running   OK        Normal    False
          True
ql1080    ql1080    Not Available       Kernel Driver
          False     Disabled  Stopped   OK
          Normal    False     False
ql10wnt   Ql10wnt   Not Available       Kernel Driver
          False     Disabled  Stopped   OK
          Normal    False     False
ql1240    ql1240    Not Available       Kernel Driver
          False     Disabled  Stopped   OK
          Normal    False     False
ql2100    ql2100    Not Available       Kernel Driver
          False     Disabled  Stopped   OK
          Normal    False     False
rasacd    Remote Access Auto Connection Driver
          c:\winnt\system32\drivers\rasacd.sys
          Kernel Driver       True      System
          Running   OK        Normal    False
          True
rasl2tp   WAN Miniport (L2TP)
          c:\winnt\system32\drivers\rasl2tp.sys
          Kernel Driver       True      Manual
          Running   OK        Normal    False
          True
raspti    Direct Parallel
          c:\winnt\system32\drivers\raspti.sys
          Kernel Driver       True      Manual
          Running   OK        Normal    False
          True
rca       Microsoft Streaming Network Raw Channel
Access    c:\winnt\system32\drivers\rca.sys
          Kernel Driver       False     Manual
          Stopped   OK        Normal    False
          False
rdbss     Rdbss
          c:\winnt\system32\drivers\rdbss.sys
          File System Driver  True      System
          Running   OK        Normal    False
          True
rdpdr     Terminal Server Device Redirector Driver
          c:\winnt\system32\drivers\rdpdr.sys
          Kernel Driver       True      Manual
          Running   OK        Normal    False
          True
rdpwd     RDPWD
          c:\winnt\system32\drivers\rdpwd.sys
          Kernel Driver       True      Manual
          Running   OK        Ignore    False
          True
redbook   Digital CD Audio Playback Filter Driver
          c:\winnt\system32\drivers\redbook.sys
          Kernel Driver       False     System
          Stopped   OK        Normal    False
          False
serenum   Serenum Filter Driver
          c:\winnt\system32\drivers\serenum.sys
          Kernel Driver       True      Manual
          Running   OK        Normal    False
          True
serial    Serial port driver
          c:\winnt\system32\drivers\serial.sys
          Kernel Driver       True      System
          Running   OK        Ignore    False
          True
sfloppy   Sfloppy
          c:\winnt\system32\drivers\sfloppy.sys
          Kernel Driver       False     System
          Stopped   OK        Ignore    False
          False
sglfb     sglfb     Not Available       Kernel Driver
          False     System    Stopped   OK
          Normal    False     False
simbad    Simbad    Not Available       Kernel Driver
          False     Disabled  Stopped   OK
          Normal    False     False
sparrow   Sparrow   Not Available       Kernel Driver
          False     Disabled  Stopped   OK
          Normal    False     False
spud      Special Purpose Utility Driver
          c:\winnt\system32\drivers\spud.sys
          Kernel Driver       True      Manual
          Running   OK        Normal    False
          True
srv       Srv       c:\winnt\system32\drivers\srv.sys
          File System Driver  True      Manual
          Running   OK        Normal    False
          True
swenum    Software Bus Driver
          c:\winnt\system32\drivers\swenum.sys
          Kernel Driver       True      Manual
          Running   OK        Normal    False
          True
symc810   symc810   Not Available       Kernel Driver
          False     Disabled  Stopped   OK
          Normal    False     False
```


© 2005 Hewlett-Packard Company. All rights reserved.

```
symc8xx   symc8xx   Not Available       Kernel Driver
          False     Disabled  Stopped   OK
          Normal    False     False
sym_hi    sym_hi    Not Available       Kernel Driver
          False     Disabled  Stopped   OK
          Normal    False     False
tcpip     TCP/IP Protocol Driver
          c:\winnt\system32\drivers\tcpip.sys
          Kernel Driver       True      System
          Running   OK        Normal    False
          True
tdasync   TDASYNC
          c:\winnt\system32\drivers\tdasync.sys
          Kernel Driver       False     Manual
          Stopped   OK        Ignore    False
          False
tdipx     TDIPX
          c:\winnt\system32\drivers\tdipx.sys
          Kernel Driver       False     Manual
          Stopped   OK        Ignore    False
          False
tdnetb    TDNETB
          c:\winnt\system32\drivers\tdnetb.sys
          Kernel Driver       False     Manual
          Stopped   OK        Ignore    False
          False
tdpipe    TDPIPE
          c:\winnt\system32\drivers\tdpipe.sys
          Kernel Driver       False     Manual
          Stopped   OK        Ignore    False
          False
tdspx     TDSPX
          c:\winnt\system32\drivers\tdspx.sys
          Kernel Driver       False     Manual
          Stopped   OK        Ignore    False
          False
tdtcp     TDTCP
          c:\winnt\system32\drivers\tdtcp.sys
          Kernel Driver       True      Manual
          Running   OK        Ignore    False
          True
termdd    Terminal Device Driver
          c:\winnt\system32\drivers\termdd.sys
          Kernel Driver       True      Auto
          Running   OK        Normal    False
          True
tga       tga       Not Available       Kernel Driver
          False     System    Stopped   OK
          Ignore    False     False
udfs      Udfs
          c:\winnt\system32\drivers\udfs.sys
          File System Driver  False     Disabled
          Stopped   OK        Normal    False
          False
uhcd      Microsoft USB Universal Host Controller
Driver    c:\winnt\system32\drivers\uhcd.sys
          Kernel Driver       True      Manual
          Running   OK        Normal    False
          True
ultra66   ultra66   Not Available       Kernel Driver
          False     Disabled  Stopped   OK
          Normal    False     False
update    Microcode Update Driver
          c:\winnt\system32\drivers\update.sys
          Kernel Driver       True      Manual
          Running   OK        Normal    False
          True
usbhub    Microsoft USB Standard Hub Driver
          c:\winnt\system32\drivers\usbhub.sys
          Kernel Driver       True      Manual
          Running   OK        Normal    False
          True
vgasave   VgaSave   c:\winnt\system32\drivers\vga.sys
          Kernel Driver       True      System
          Running   OK        Ignore    False
          True
wanarp    Remote Access IP ARP Driver
          c:\winnt\system32\drivers\wanarp.sys
          Kernel Driver       True      Manual
          Running   OK        Normal    False
          True
wdica     WDICA     Not Available       Kernel Driver
          False     Manual    Stopped   OK
          Ignore    False     False

[Environment Variables]

Variable  Value     User Name
ComSpec   %SystemRoot%\system32\cmd.exe <SYSTEM>
Os2LibPath          %SystemRoot%\system32\os2\dll;
          <SYSTEM>
Path
          %SystemRoot%\system32;%SystemRoot%;%SystemR
oot%\System32\Wbem;C:\Program Files\Microsoft SQL
Server\80\Tools\BINN          <SYSTEM>
windir    %SystemRoot%        <SYSTEM>
OS        Windows_NT          <SYSTEM>
PROCESSOR_ARCHITECTURE        x86       <SYSTEM>
PROCESSOR_LEVEL     15        <SYSTEM>
PROCESSOR_IDENTIFIER          x86 Family 15 Model 4
Stepping 1, GenuineIntel      <SYSTEM>
PROCESSOR_REVISION  0401      <SYSTEM>
NUMBER_OF_PROCESSORS          4         <SYSTEM>
PATHEXT
          .COM;.EXE;.BAT;.CMD;.VBS;.VBE;.JS;.JSE;.WSF
;.WSH     <SYSTEM>
TEMP      %SystemRoot%\TEMP   <SYSTEM>
TMP       %SystemRoot%\TEMP   <SYSTEM>
TEMP      %USERPROFILE%\Local Settings\Temp
          CL26\Administrator
TMP       %USERPROFILE%\Local Settings\Temp
          CL26\Administrator

[Jobs]

[ Following are sub-categories of this main category
]

[Print]

Document  Size      Owner     Notify    Status
          Time Submitted      Start Time
          Until Time          Elapsed Time
          Pages Printed       Job ID    Priority
          Parameters          Driver Name
          Print Processor     Host Print Queue
          Data Type Name
Unknown   Unknown   Unknown   Unknown   Unknown
          Unknown   Unknown   Unknown   Unknown
          Unknown   Unknown   Unknown   Unknown
          Unknown   Unknown   Unknown   Unknown
          Unknown

[Network Connections]

Local Name          Remote Name         Type
          Status    User Name
No network connections information


[Running Tasks]

Name      Path      Process ID          Priority  Min
Working Set         Max Working Set     Start Time
          Version   Size      File Date
system idle process Not Available       0         0
          Not Available       Not Available       Not
Available Unknown   Unknown   Unknown
system    Not Available       8         8         0
          1413120   Not Available       Unknown
          Unknown   Unknown
smss.exe  c:\winnt\system32\smss.exe    188       11
          204800    1413120   4/12/2005 6:53:45 PM
          5.00.2195.2901      44.27 KB (45,328 bytes)
          12/7/1999 7:00:00 AM
csrss.exe Not Available       216       13        Not
Available Not Available       4/12/2005 6:53:47 PM
          Unknown   Unknown   Unknown
winlogon.exe        c:\winnt\system32\winlogon.exe
          212       13        204800    1413120
          4/12/2005 6:53:47 PM
          5.00.2195.2953      173.77 KB (177,936
bytes)    12/7/1999 7:00:00 AM
services.exe        c:\winnt\system32\services.exe
          268       9         204800    1413120
          4/12/2005 6:53:48 PM
          5.00.2195.2780      86.77 KB (88,848 bytes)
          12/7/1999 7:00:00 AM
lsass.exe c:\winnt\system32\lsass.exe   280       9
          204800    1413120   4/12/2005 6:53:48 PM
          5.00.2195.2964      32.77 KB (33,552 bytes)
          12/7/1999 7:00:00 AM
termsrv.exe         c:\winnt\system32\termsrv.exe 388
          10        204800    1413120   4/12/2005
6:53:48 PM          5.00.2195.2342      137.27 KB
(140,560 bytes)     9/13/2002 6:09:44 PM
aclient.exe         c:\program
files\altiris\aclient\aclient.exe        484       8
          204800    1413120   4/12/2005 6:53:49 PM
          5.6.124   3.83 MB (4,018,252 bytes)
          6/5/2003 1:55:46 PM
regsvc.exe          c:\winnt\system32\regsvc.exe  520
          8         204800    1413120   4/12/2005
6:53:49 PM          5.00.2195.2104      65.27 KB
(66,832 bytes)      9/13/2002 6:09:39 PM
rsys.exe  c:\benchcraft\rsys.exe        532       8
          204800    1413120   4/12/2005 6:53:49 PM
```


© 2005 Hewlett-Packard Company. All rights reserved.

```
          Not Available       32.00 KB (32,768 bytes)
          9/13/2002 6:30:57 PM
dllhost.exe
          c:\winnt\system32\wins\dllhost.exe      556
          8         204800    1413120   4/12/2005
6:53:50 PM          Not Available       10.00 KB
(10,240 bytes)      3/29/2005 3:05:04 PM
svchost.exe         c:\winnt\system32\svchost.exe 600
          8         204800    1413120   4/12/2005
6:53:50 PM          5.00.2134.1         7.77 KB
(7,952 bytes)       12/7/1999 7:00:00 AM
svchost.exe         c:\winnt\system32\svchost.exe 688
          8         204800    1413120   4/12/2005
6:53:53 PM          5.00.2134.1         7.77 KB
(7,952 bytes)       12/7/1999 7:00:00 AM
mstask.exe          c:\winnt\system32\mstask.exe  716
          8         204800    1413120   4/12/2005
6:53:53 PM          4.71.2195.1         115.27 KB
(118,032 bytes)     9/13/2002 6:09:32 PM
winmgmt.exe
          c:\winnt\system32\wbem\winmgmt.exe      744
          8         204800    1413120   4/12/2005
6:53:53 PM          1.50.1085.0029      192.08 KB
(196,685 bytes)     9/13/2002 6:09:52 PM
inetinfo.exe
          c:\winnt\system32\inetsrv\inetinfo.exe  772
          8         204800    1413120   4/12/2005
6:53:53 PM          5.00.0984 14.27 KB (14,608 bytes)
          9/13/2002 6:10:42 PM
dfssvc.exe          c:\winnt\system32\dfssvc.exe  164
          8         204800    1413120   4/12/2005
6:53:58 PM          5.00.2195.2841      88.27 KB
(90,384 bytes)      9/13/2002 6:09:18 PM
svchost.exe         c:\winnt\system32\svchost.exe
          1036      8         204800    1413120
          4/12/2005 6:54:49 PM          5.00.2134.1
          7.77 KB (7,952 bytes)         12/7/1999
7:00:00 AM
logon.scr c:\winnt\system32\logon.scr   628       4
          204800    1413120   4/12/2005 7:08:59 PM
          5.00.2195.2104      127.77 KB (130,832
bytes)    9/13/2002 6:09:26 PM
dllhost.exe         Not Available       800       8
          Not Available       Not Available
          4/12/2005 7:43:54 PM          Unknown
          Unknown   Unknown
csrss.exe Not Available       5136      13        Not
Available Not Available       4/13/2005 8:55:59 AM
          Unknown   Unknown   Unknown
winlogon.exe        c:\winnt\system32\winlogon.exe
          5144      13        204800    1413120
          4/13/2005 8:55:59 AM
          5.00.2195.2953      173.77 KB (177,936
bytes)    12/7/1999 7:00:00 AM
rdpclip.exe         c:\winnt\system32\rdpclip.exe
          4788      8         204800    1413120
          4/13/2005 8:56:03 AM          5.00.2174.1
          39.77 KB (40,720 bytes)       9/13/2002
5:45:10 PM
explorer.exe        c:\winnt\explorer.exe
          5016      8         204800    1413120
          4/13/2005 8:56:03 AM
          5.00.3315.2846      237.27 KB (242,960
bytes)    9/13/2002 6:09:47 PM
aclntusr.exe        c:\program
files\altiris\aclient\aclntusr.exe      2116      8
          204800    1413120   4/13/2005 8:56:03 AM
          5, 6, 0, 50         176.00 KB (180,224
bytes)    6/5/2003 1:55:47 PM
tardis.exe          c:\program files\tardis 2000
v1.4\tardis.exe     3088      8         204800
          1413120   4/13/2005 8:56:04 AM          5,
0, 1, 4   308.00 KB (315,392 bytes)     9/13/2002
6:21:25 PM
msdtc.exe c:\winnt\system32\msdtc.exe   912       8
          204800    1413120   4/18/2005 11:45:59 AM
          1999.9.3421.3       6.77 KB (6,928 bytes)
          9/13/2002 5:45:07 PM
mmc.exe   c:\winnt\system32\mmc.exe     1680      8
          204800    1413120   4/18/2005 2:52:57 PM
          5.00.2195.2301      589.27 KB (603,408
bytes)    9/13/2002 6:09:26 PM
rsvp.exe  c:\winnt\system32\rsvp.exe    3812      8
          204800    1413120   4/18/2005 2:54:00 PM
          5.00.2167.1         172.77 KB (176,912
bytes)    12/7/1999 7:00:00 AM

[Loaded Modules]

Name      Version   Size      File Date Manufacturer
          Path
traffic.dll         5.00.2139.1         30.77 KB
(31,504 bytes)      12/7/1999 7:00:00 AM
          Microsoft Corporation
          c:\winnt\system32\traffic.dll
rsvp.exe  5.00.2167.1         172.77 KB (176,912
bytes)    12/7/1999 7:00:00 AM          Microsoft
Corporation         c:\winnt\system32\rsvp.exe
wbemprox.dll        1.50.1085.0045      40.08 KB
(41,040 bytes)      9/13/2002 6:09:52 PM
          Microsoft Corporation
          c:\winnt\system32\wbem\wbemprox.dll
mlang.dll 5.00.3103.1000      510.77 KB (523,024
bytes)    9/13/2002 6:09:26 PM          Microsoft
Corporation         c:\winnt\system32\mlang.dll
cabinet.dll         5.00.2147.1         54.77 KB
(56,080 bytes)      12/7/1999 7:00:00 AM
          Microsoft Corporation
          c:\winnt\system32\cabinet.dll
msinfo32.dll        5.00.2177.1         312.27 KB
(319,760 bytes)     9/13/2002 5:46:00 PM
          Microsoft Corporation         c:\program
files\common files\microsoft
shared\msinfo\msinfo32.dll
mmcndmgr.dll        5.00.2178.1         815.27 KB
(834,832 bytes)     12/7/1999 7:00:00 AM
          Microsoft Corporation
          c:\winnt\system32\mmcndmgr.dll
mmc.exe   5.00.2195.2301      589.27 KB (603,408
bytes)    9/13/2002 6:09:26 PM          Microsoft
Corporation         c:\winnt\system32\mmc.exe
msvcp50.dll         5.00.7051 552.50 KB (565,760
bytes)    12/7/1999 7:00:00 AM          Microsoft
Corporation         c:\winnt\system32\msvcp50.dll
xolehlp.dll         1999.9.3421.3       17.27 KB
(17,680 bytes)      9/13/2002 5:45:08 PM
          Microsoft Corporation
          c:\winnt\system32\xolehlp.dll
msdtclog.dll        1999.9.3421.3       89.77 KB
(91,920 bytes)      9/13/2002 5:45:07 PM
          Microsoft Corporation
          c:\winnt\system32\msdtclog.dll
msdtctm.dll         2000.2.3471.1       1.07 MB
(1,120,528 bytes)   9/13/2002 6:09:28 PM
          Microsoft Corporation
          c:\winnt\system32\msdtctm.dll
msdtc.exe 1999.9.3421.3       6.77 KB (6,928 bytes)
          9/13/2002 5:45:07 PM          Microsoft
Corporation         c:\winnt\system32\msdtc.exe
rapilib.dll         5.00.2195.2717      24.77 KB
(25,360 bytes)      9/13/2002 6:09:39 PM
          Microsoft Corporation
          c:\winnt\system32\rapilib.dll
rsvpsp.dll          5.00.2195.2749      74.77 KB
(76,560 bytes)      9/13/2002 6:09:40 PM
          Microsoft Corporation
          c:\winnt\system32\rsvpsp.dll
tardis.exe          5, 0, 1, 4          308.00 KB
(315,392 bytes)     9/13/2002 6:21:25 PM
          H.C.Mingham-Smith Ltd.        c:\program
files\tardis 2000 v1.4\tardis.exe
aclntusr.exe        5, 6, 0, 50         176.00 KB
(180,224 bytes)     6/5/2003 1:55:47 PM
          c:\program
files\altiris\aclient\aclntusr.exe
browselc.dll        5.00.3315.2846      34.50 KB
(35,328 bytes)      9/13/2002 6:09:14 PM
          Microsoft Corporation
          c:\winnt\system32\browselc.dll
shdoclc.dll         5.00.3315.2879      324.50 KB
(332,288 bytes)     9/13/2002 6:09:41 PM
          Microsoft Corporation
          c:\winnt\system32\shdoclc.dll
faxshell.dll        5.00.2134.1         8.27 KB
(8,464 bytes)       12/7/1999 7:00:00 AM
          Microsoft Corporation
          c:\winnt\system32\faxshell.dll
msacm32.dll         5.00.2134.1         65.27 KB
(66,832 bytes)      12/7/1999 7:00:00 AM
          Microsoft Corporation
          c:\winnt\system32\msacm32.dll
avifil32.dll        5.00.2134.1         76.27 KB
(78,096 bytes)      12/7/1999 7:00:00 AM
          Microsoft Corporation
          c:\winnt\system32\avifil32.dll
msvfw32.dll         5.00.2134.1         113.77 KB
(116,496 bytes)     12/7/1999 7:00:00 AM
          Microsoft Corporation
          c:\winnt\system32\msvfw32.dll
docprop2.dll        5.00.2178.1         297.77 KB
(304,912 bytes)     12/7/1999 7:00:00 AM
          Microsoft Corporation
          c:\winnt\system32\docprop2.dll
linkinfo.dll        5.00.2134.1         15.77 KB
(16,144 bytes)      12/7/1999 7:00:00 AM
          Microsoft Corporation
          c:\winnt\system32\linkinfo.dll
```


© 2005 Hewlett-Packard Company. All rights reserved.

```
powrprof.dll        5.00.3103.1000      13.27 KB
(13,584 bytes)      9/13/2002 6:09:38 PM
          Microsoft Corporation
          c:\winnt\system32\powrprof.dll
batmeter.dll        5.00.3103.1000      20.27 KB
(20,752 bytes)      9/13/2002 6:09:14 PM
          Microsoft Corporation
          c:\winnt\system32\batmeter.dll
stobject.dll        5.00.2195.2780      79.27 KB
(81,168 bytes)      9/13/2002 6:09:43 PM
          Microsoft Corporation
          c:\winnt\system32\stobject.dll
msi.dll   1.11.2405.0         1.69 MB (1,767,184
bytes)    9/13/2002 6:09:29 PM          Microsoft
Corporation         c:\winnt\system32\msi.dll
webcheck.dll        5.00.3315.1000      251.77 KB
(257,808 bytes)     9/13/2002 6:09:45 PM
          Microsoft Corporation
          c:\winnt\system32\webcheck.dll
ntshrui.dll         5.00.2134.1         46.77 KB
(47,888 bytes)      12/7/1999 7:00:00 AM
          Microsoft Corporation
          c:\winnt\system32\ntshrui.dll
mydocs.dll          5.00.2920.0000      55.77 KB
(57,104 bytes)      12/7/1999 7:00:00 AM
          Microsoft Corporation
          c:\winnt\system32\mydocs.dll
browseui.dll        5.00.3315.2846      788.77 KB
(807,696 bytes)     9/13/2002 6:09:14 PM
          Microsoft Corporation
          c:\winnt\system32\browseui.dll
shdocvw.dll         5.00.3315.2879      1.05 MB
(1,104,144 bytes)   9/13/2002 6:09:42 PM
          Microsoft Corporation
          c:\winnt\system32\shdocvw.dll
explorer.exe        5.00.3315.2846      237.27 KB
(242,960 bytes)     9/13/2002 6:09:47 PM
          Microsoft Corporation
          c:\winnt\explorer.exe
rdpclip.exe         5.00.2174.1         39.77 KB
(40,720 bytes)      9/13/2002 5:45:10 PM
          Microsoft Corporation
          c:\winnt\system32\rdpclip.exe
cscui.dll 5.00.2195.2959      228.27 KB (233,744
bytes)    9/13/2002 6:09:17 PM          Microsoft
Corporation         c:\winnt\system32\cscui.dll
logon.scr 5.00.2195.2104      127.77 KB (130,832
bytes)    9/13/2002 6:09:26 PM          Microsoft
Corporation         c:\winnt\system32\logon.scr
tapisrv.dll         5.00.2195.2955      169.27 KB
(173,328 bytes)     9/13/2002 6:09:44 PM
          Microsoft Corporation
          c:\winnt\system32\tapisrv.dll
dfssvc.exe          5.00.2195.2841      88.27 KB
(90,384 bytes)      9/13/2002 6:09:18 PM
          Microsoft Corporation
          c:\winnt\system32\dfssvc.exe
tpcc_com_all.dll    1, 0, 0, 1          80.00 KB
(81,920 bytes)      9/13/2002 6:29:44 PM
          c:\inetpub\wwwroot\tpcc_c~2.dll
dbnetlib.dll        2000.080.0194.00    84.06 KB
(86,082 bytes)      9/13/2002 6:19:43 PM
          Microsoft Corporation
          c:\winnt\system32\dbnetlib.dll
ntwdblib.dll        2000.080.0194.00    268.06 KB
(274,489 bytes)     9/13/2002 6:20:13 PM
          Microsoft Corporation
          c:\winnt\system32\ntwdblib.dll
tpcc_dblib.dll      Not Available       28.00 KB
(28,672 bytes)      9/13/2002 6:29:42 PM          Not
Available c:\inetpub\wwwroot\tpcc_dblib.dll
mfc42.dll 6.00.8665.0         972.05 KB (995,383
bytes)    12/7/1999 7:00:00 AM          Microsoft
Corporation         c:\winnt\system32\mfc42.dll
wam.dll   5.00.0984 70.77 KB (72,464 bytes)
          9/13/2002 6:10:44 PM          Microsoft
Corporation         c:\winnt\system32\inetsrv\wam.dll
odbcint.dll         3.520.6526.0        88.00 KB
(90,112 bytes)      9/13/2002 6:19:39 PM
          Microsoft Corporation
          c:\winnt\system32\odbcint.dll
odbc32.dll          3.520.6526.0        216.27 KB
(221,456 bytes)     9/13/2002 6:19:39 PM
          Microsoft Corporation
          c:\winnt\system32\odbc32.dll
mtxoci.dll          2000.2.3471.1       101.77 KB
(104,208 bytes)     9/13/2002 6:09:33 PM
          Microsoft Corporation
          c:\winnt\system32\mtxoci.dll
resutils.dll        5.00.2195.2787      39.77 KB
(40,720 bytes)      9/13/2002 6:09:40 PM
          Microsoft Corporation
          c:\winnt\system32\resutils.dll
clusapi.dll         5.00.2195.2104      54.27 KB
(55,568 bytes)      9/13/2002 6:09:16 PM
          Microsoft Corporation
          c:\winnt\system32\clusapi.dll
mtxclu.dll          2000.2.3471.1       51.27 KB
(52,496 bytes)      9/13/2002 6:09:33 PM
          Microsoft Corporation
          c:\winnt\system32\mtxclu.dll
msdtcprx.dll        2000.2.3471.1       665.77 KB
(681,744 bytes)     9/13/2002 6:09:27 PM
          Microsoft Corporation
          c:\winnt\system32\msdtcprx.dll
comsvcs.dll         2000.2.3471.1       1.35 MB
(1,417,488 bytes)   9/13/2002 6:09:17 PM
          Microsoft Corporation
          c:\winnt\system32\comsvcs.dll
iislog.dll          5.00.0984 75.27 KB (77,072 bytes)
          9/13/2002 6:10:42 PM          Microsoft
Corporation
          c:\winnt\system32\inetsrv\iislog.dll
inetsloc.dll        5.00.0984 20.27 KB (20,752 bytes)
          9/13/2002 6:09:24 PM          Microsoft
Corporation         c:\winnt\system32\inetsloc.dll
isatq.dll 5.00.0984 60.27 KB (61,712 bytes)
          9/13/2002 6:10:43 PM          Microsoft
Corporation
          c:\winnt\system32\inetsrv\isatq.dll
security.dll        5.00.2154.1         5.77 KB
(5,904 bytes)       12/7/1999 7:00:00 AM
          Microsoft Corporation
          c:\winnt\system32\security.dll
svcext.dll          5.00.0984 39.77 KB (40,720 bytes)
          9/13/2002 6:10:44 PM          Microsoft
Corporation
          c:\winnt\system32\inetsrv\svcext.dll
admexs.dll          5.00.0984 27.77 KB (28,432 bytes)
          9/13/2002 6:10:41 PM          Microsoft
Corporation
          c:\winnt\system32\inetsrv\admexs.dll
wamreg.dll          5.00.0984 45.77 KB (46,864 bytes)
          9/13/2002 6:10:44 PM          Microsoft
Corporation
          c:\winnt\system32\inetsrv\wamreg.dll
metadata.dll        5.00.0984 68.77 KB (70,416 bytes)
          9/13/2002 6:10:43 PM          Microsoft
Corporation
          c:\winnt\system32\inetsrv\metadata.dll
iismap.dll          5.00.0984 55.77 KB (57,104 bytes)
          9/13/2002 6:09:23 PM          Microsoft
Corporation         c:\winnt\system32\iismap.dll
nsepm.dll 5.00.0984 43.27 KB (44,304 bytes)
          9/13/2002 6:10:43 PM          Microsoft
Corporation
          c:\winnt\system32\inetsrv\nsepm.dll
admwprox.dll        5.00.0984 31.77 KB (32,528 bytes)
          9/13/2002 5:45:33 PM          Microsoft
Corporation         c:\winnt\system32\admwprox.dll
coadmin.dll         5.00.0984 39.27 KB (40,208 bytes)
          9/13/2002 6:10:41 PM          Microsoft
Corporation
          c:\winnt\system32\inetsrv\coadmin.dll
iisadmin.dll        5.00.0984 15.27 KB (15,632 bytes)
          9/13/2002 6:10:42 PM          Microsoft
Corporation
          c:\winnt\system32\inetsrv\iisadmin.dll
rpcref.dll          5.00.0984 4.27 KB (4,368 bytes)
          9/13/2002 6:10:43 PM          Microsoft
Corporation
          c:\winnt\system32\inetsrv\rpcref.dll
iisrtl.dll          5.00.0984 119.77 KB (122,640
bytes)    9/13/2002 6:09:23 PM          Microsoft
Corporation         c:\winnt\system32\iisrtl.dll
inetinfo.exe        5.00.0984 14.27 KB (14,608 bytes)
          9/13/2002 6:10:42 PM          Microsoft
Corporation
          c:\winnt\system32\inetsrv\inetinfo.exe
netui1.dll          5.00.2134.1         210.27 KB
(215,312 bytes)     12/7/1999 7:00:00 AM
          Microsoft Corporation
          c:\winnt\system32\netui1.dll
netui0.dll          5.00.2134.1         70.27 KB
(71,952 bytes)      12/7/1999 7:00:00 AM
          Microsoft Corporation
          c:\winnt\system32\netui0.dll
ntlanman.dll        5.00.2157.1         35.27 KB
(36,112 bytes)      12/7/1999 7:00:00 AM
          Microsoft Corporation
          c:\winnt\system32\ntlanman.dll
wshnetbs.dll        5.00.2134.1         7.77 KB
(7,952 bytes)       12/7/1999 7:00:00 AM
          Microsoft Corporation
          c:\winnt\system32\wshnetbs.dll
perfos.dll          5.00.2155.1         21.27 KB
(21,776 bytes)      12/7/1999 7:00:00 AM
```


© 2005 Hewlett-Packard Company. All rights reserved.

```
          Microsoft Corporation
          c:\winnt\system32\perfos.dll
provthrd.dll        1.50.1085.0000      68.07 KB
(69,708 bytes)      9/13/2002 5:45:53 PM
          Microsoft Corporation
          c:\winnt\system32\wbem\provthrd.dll
ntevt.dll 1.50.1085.0000      192.06 KB (196,669
bytes)    12/7/1999 7:00:00 AM          Microsoft
Corporation         c:\winnt\system32\wbem\ntevt.dll
framedyn.dll        1.50.1085.0000      164.05 KB
(167,992 bytes)     12/7/1999 7:00:00 AM
          Microsoft Corporation
          c:\winnt\system32\wbem\framedyn.dll
cimwin32.dll        1.50.1085.0038      1.02 MB
(1,073,232 bytes)   9/13/2002 6:09:50 PM
          Microsoft Corporation
          c:\winnt\system32\wbem\cimwin32.dll
wbemsvc.dll         1.50.1085.0007      40.07 KB
(41,036 bytes)      9/13/2002 6:09:52 PM
          Microsoft Corporation
          c:\winnt\system32\wbem\wbemsvc.dll
wbemess.dll         1.50.1085.0039      364.07 KB
(372,804 bytes)     9/13/2002 6:09:52 PM
          Microsoft Corporation
          c:\winnt\system32\wbem\wbemess.dll
wbemcore.dll        1.50.1085.0036      628.07 KB
(643,140 bytes)     9/13/2002 6:09:52 PM
          Microsoft Corporation
          c:\winnt\system32\wbem\wbemcore.dll
fastprox.dll        1.50.1085.0037      144.08 KB
(147,536 bytes)     9/13/2002 6:09:51 PM
          Microsoft Corporation
          c:\winnt\system32\wbem\fastprox.dll
wbemcomn.dll        1.50.1085.0021      692.07 KB
(708,675 bytes)     9/13/2002 6:09:51 PM
          Microsoft Corporation
          c:\winnt\system32\wbem\wbemcomn.dll
winmgmt.exe         1.50.1085.0029      192.08 KB
(196,685 bytes)     9/13/2002 6:09:52 PM
          Microsoft Corporation
          c:\winnt\system32\wbem\winmgmt.exe
msidle.dll          5.00.2920.0000      6.27 KB
(6,416 bytes)       12/7/1999 7:00:00 AM
          Microsoft Corporation
          c:\winnt\system32\msidle.dll
mstask.exe          4.71.2195.1         115.27 KB
(118,032 bytes)     9/13/2002 6:09:32 PM
          Microsoft Corporation
          c:\winnt\system32\mstask.exe
wmi.dll   5.00.2191.1         6.27 KB (6,416 bytes)
          12/7/1999 7:00:00 AM          Microsoft
Corporation         c:\winnt\system32\wmi.dll
netshell.dll        5.00.2195.2779      457.27 KB
(468,240 bytes)     9/13/2002 6:09:34 PM
          Microsoft Corporation
          c:\winnt\system32\netshell.dll
netman.dll          5.00.2195.2779      89.27 KB
(91,408 bytes)      9/13/2002 6:09:34 PM
          Microsoft Corporation
          c:\winnt\system32\netman.dll
rasdlg.dll          5.00.2195.2671      514.27 KB
(526,608 bytes)     12/7/1999 7:00:00 AM
          Microsoft Corporation
          c:\winnt\system32\rasdlg.dll
netcfgx.dll         5.00.2195.2228      534.77 KB
(547,600 bytes)     9/13/2002 6:09:34 PM
          Microsoft Corporation
          c:\winnt\system32\netcfgx.dll
rasmans.dll         5.00.2195.2728      147.27 KB
(150,800 bytes)     9/13/2002 6:09:39 PM
          Microsoft Corporation
          c:\winnt\system32\rasmans.dll
ntmsdba.dll         5.00.2195.2779      167.27 KB
(171,280 bytes)     9/13/2002 6:09:35 PM
          Microsoft Corporation
          c:\winnt\system32\ntmsdba.dll
sens.dll  5.00.2163.1         36.77 KB (37,648 bytes)
          12/7/1999 7:00:00 AM          Microsoft
Corporation         c:\winnt\system32\sens.dll
ntmssvc.dll         5.00.2195.2779      391.27 KB
(400,656 bytes)     9/13/2002 6:09:35 PM
          Microsoft Corporation
          c:\winnt\system32\ntmssvc.dll
txfaux.dll          2000.2.3471.1       374.27 KB
(383,248 bytes)     9/13/2002 6:09:44 PM
          Microsoft Corporation
          c:\winnt\system32\txfaux.dll
es.dll    2000.2.3471.1       222.27 KB (227,600
bytes)    9/13/2002 6:09:21 PM          Microsoft
Corporation         c:\winnt\system32\es.dll
rpcss.dll 5.00.2195.2815      231.27 KB (236,816
bytes)    9/13/2002 6:09:40 PM          Microsoft
Corporation         c:\winnt\system32\rpcss.dll
svchost.exe         5.00.2134.1         7.77 KB
(7,952 bytes)       12/7/1999 7:00:00 AM
          Microsoft Corporation
          c:\winnt\system32\svchost.exe
urlmon.dll          5.00.3315.1000      441.27 KB
(451,856 bytes)     9/13/2002 6:09:44 PM
          Microsoft Corporation
          c:\winnt\system32\urlmon.dll
dllhost.exe         Not Available       10.00 KB
(10,240 bytes)      3/29/2005 3:05:04 PM          Not
Available c:\winnt\system32\wins\dllhost.exe
rsys.exe  Not Available       32.00 KB (32,768 bytes)
          9/13/2002 6:30:57 PM          Not Available
          c:\benchcraft\rsys.exe
regsvc.exe          5.00.2195.2104      65.27 KB
(66,832 bytes)      9/13/2002 6:09:39 PM
          Microsoft Corporation
          c:\winnt\system32\regsvc.exe
ntmarta.dll         5.00.2195.2862      98.77 KB
(101,136 bytes)     9/13/2002 6:09:35 PM
          Microsoft Corporation
          c:\winnt\system32\ntmarta.dll
psapi.dll 5.00.2134.1         28.27 KB (28,944 bytes)
          12/7/1999 7:00:00 AM          Microsoft
Corporation         c:\winnt\system32\psapi.dll
riched20.dll        5.30.23.1205        421.27 KB
(431,376 bytes)     9/13/2002 6:09:40 PM
          Microsoft Corporation
          c:\winnt\system32\riched20.dll
riched32.dll        5.00.2134.1         3.77 KB
(3,856 bytes)       12/7/1999 7:00:00 AM
          Microsoft Corporation
          c:\winnt\system32\riched32.dll
comdlg32.dll        5.00.3103.1000      236.77 KB
(242,448 bytes)     12/7/1999 7:00:00 AM
          Microsoft Corporation
          c:\winnt\system32\comdlg32.dll
aclient.exe         5.6.124   3.83 MB (4,018,252
bytes)    6/5/2003 1:55:46 PM Altiris, Inc.
          c:\program
files\altiris\aclient\aclient.exe
rdpwsx.dll          5.00.2180.1         94.40 KB
(96,664 bytes)      9/13/2002 5:45:10 PM
          Microsoft Corporation
          c:\winnt\system32\rdpwsx.dll
mstlsapi.dll        5.00.2181.1         24.77 KB
(25,360 bytes)      12/7/1999 7:00:00 AM
          Microsoft Corporation
          c:\winnt\system32\mstlsapi.dll
icaapi.dll          5.00.2134.1         118.77 KB
(121,616 bytes)     9/13/2002 5:45:09 PM
          Microsoft Corporation
          c:\winnt\system32\icaapi.dll
regapi.dll          5.00.2155.1         35.27 KB
(36,112 bytes)      12/7/1999 7:00:00 AM
          Microsoft Corporation
          c:\winnt\system32\regapi.dll
termsrv.exe         5.00.2195.2342      137.27 KB
(140,560 bytes)     9/13/2002 6:09:44 PM
          Microsoft Corporation
          c:\winnt\system32\termsrv.exe
iissuba.dll         5.00.0984 9.77 KB (10,000 bytes)
          12/7/1999 7:00:00 AM          Microsoft
Corporation         c:\winnt\system32\iissuba.dll
dssenh.dll          5.00.2195.2228      142.77 KB
(146,192 bytes)     9/13/2002 6:10:37 PM
          Microsoft Corporation
          c:\winnt\system32\dssenh.dll
oakley.dll          5.00.2195.2785      378.77 KB
(387,856 bytes)     9/13/2002 6:09:36 PM
          Microsoft Corporation
          c:\winnt\system32\oakley.dll
mfc42u.dll          6.00.8665.0         972.05 KB
(995,384 bytes)     12/7/1999 7:00:00 AM
          Microsoft Corporation
          c:\winnt\system32\mfc42u.dll
polagent.dll        5.00.2183.1         108.27 KB
(110,864 bytes)     12/7/1999 7:00:00 AM
          Microsoft Corporation
          c:\winnt\system32\polagent.dll
scecli.dll          5.00.2195.2780      105.27 KB
(107,792 bytes)     9/13/2002 6:09:41 PM
          Microsoft Corporation
          c:\winnt\system32\scecli.dll
atl.dll   3.00.8449 57.56 KB (58,938 bytes)
          12/7/1999 7:00:00 AM          Microsoft
Corporation         c:\winnt\system32\atl.dll
certcli.dll         5.00.2195.2778      130.77 KB
(133,904 bytes)     9/13/2002 6:09:16 PM
          Microsoft Corporation
          c:\winnt\system32\certcli.dll
mswsock.dll         5.00.2195.2871      62.77 KB
(64,272 bytes)      9/13/2002 6:09:33 PM
```


© 2005 Hewlett-Packard Company. All rights reserved.

```
          Microsoft Corporation
          c:\winnt\system32\mswsock.dll
ntdsatq.dll         5.00.2195.2878      31.27 KB
(32,016 bytes)      9/13/2002 6:09:35 PM
          Microsoft Corporation
          c:\winnt\system32\ntdsatq.dll
ntdsa.dll 5.00.2195.2899      990.77 KB (1,014,544
bytes)    9/13/2002 6:09:34 PM          Microsoft
Corporation         c:\winnt\system32\ntdsa.dll
kdcsvc.dll          5.00.2195.2878      137.77 KB
(141,072 bytes)     9/13/2002 6:09:26 PM
          Microsoft Corporation
          c:\winnt\system32\kdcsvc.dll
sfmapi.dll          5.00.2134.1         38.77 KB
(39,696 bytes)      12/7/1999 7:00:00 AM
          Microsoft Corporation
          c:\winnt\system32\sfmapi.dll
rassfm.dll          5.00.2195.2671      21.27 KB
(21,776 bytes)      9/13/2002 6:09:39 PM
          Microsoft Corporation
          c:\winnt\system32\rassfm.dll
mpr.dll   5.00.2195.2779      53.27 KB (54,544 bytes)
          9/13/2002 6:09:27 PM          Microsoft
Corporation         c:\winnt\system32\mpr.dll
rsabase.dll         5.00.2195.2228      128.27 KB
(131,344 bytes)     5/4/2001 12:05:02 PM
          Microsoft Corporation
          c:\winnt\system32\rsabase.dll
schannel.dll        5.00.2195.2922      138.27 KB
(141,584 bytes)     5/4/2001 12:05:02 PM
          Microsoft Corporation
          c:\winnt\system32\schannel.dll
netlogon.dll        5.00.2195.2865      357.77 KB
(366,352 bytes)     9/13/2002 6:09:34 PM
          Microsoft Corporation
          c:\winnt\system32\netlogon.dll
kerberos.dll        5.00.2195.2913      198.77 KB
(203,536 bytes)     9/13/2002 6:09:26 PM
          Microsoft Corporation
          c:\winnt\system32\kerberos.dll
msprivs.dll         5.00.2154.1         41.50 KB
(42,496 bytes)      12/7/1999 7:00:00 AM
          Microsoft Corporation
          c:\winnt\system32\msprivs.dll
samsrv.dll          5.00.2195.2918      369.77 KB
(378,640 bytes)     12/7/1999 7:00:00 AM
          Microsoft Corporation
          c:\winnt\system32\samsrv.dll
lsasrv.dll          5.00.2195.2964      492.77 KB
(504,592 bytes)     12/7/1999 7:00:00 AM
          Microsoft Corporation
          c:\winnt\system32\lsasrv.dll
lsass.exe 5.00.2195.2964      32.77 KB (33,552 bytes)
          12/7/1999 7:00:00 AM          Microsoft
Corporation         c:\winnt\system32\lsass.exe
ntlsapi.dll         5.00.2134.1         6.77 KB
(6,928 bytes)       12/7/1999 7:00:00 AM
          Microsoft Corporation
          c:\winnt\system32\ntlsapi.dll
esent.dll 6.0.3940.13         1.08 MB (1,135,376
bytes)    9/13/2002 6:09:21 PM          Microsoft
Corporation         c:\winnt\system32\esent.dll
wmicore.dll         5.00.2195.2842      72.27 KB
(74,000 bytes)      9/13/2002 6:09:46 PM
          Microsoft Corporation
          c:\winnt\system32\wmicore.dll
browser.dll         5.00.2195.2778      48.27 KB
(49,424 bytes)      9/13/2002 6:09:14 PM
          Microsoft Corporation
          c:\winnt\system32\browser.dll
trkwks.dll          5.00.2166.1         88.77 KB
(90,896 bytes)      12/7/1999 7:00:00 AM
          Microsoft Corporation
          c:\winnt\system32\trkwks.dll
psbase.dll          5.00.2195.2779      111.77 KB
(114,448 bytes)     9/13/2002 6:09:39 PM
          Microsoft Corporation
          c:\winnt\system32\psbase.dll
cryptsvc.dll        5.00.2181.1         61.77 KB
(63,248 bytes)      12/7/1999 7:00:00 AM
          Microsoft Corporation
          c:\winnt\system32\cryptsvc.dll
seclogon.dll        5.00.2135.1         15.77 KB
(16,144 bytes)      12/7/1999 7:00:00 AM
          Microsoft Corporation
          c:\winnt\system32\seclogon.dll
cryptdll.dll        5.00.2135.1         41.27 KB
(42,256 bytes)      12/7/1999 7:00:00 AM
          Microsoft Corporation
          c:\winnt\system32\cryptdll.dll
wkssvc.dll          5.00.2195.2780      95.27 KB
(97,552 bytes)      12/7/1999 7:00:00 AM
          Microsoft Corporation
          c:\winnt\system32\wkssvc.dll
srvsvc.dll          5.00.2195.2904      79.27 KB
(81,168 bytes)      12/7/1999 7:00:00 AM
          Microsoft Corporation
          c:\winnt\system32\srvsvc.dll
cfgmgr32.dll        5.00.2134.1         16.77 KB
(17,168 bytes)      12/7/1999 7:00:00 AM
          Microsoft Corporation
          c:\winnt\system32\cfgmgr32.dll
dmserver.dll        2195.2778.297.3     11.77 KB
(12,048 bytes)      9/13/2002 6:09:19 PM
          VERITAS Software Corp.
          c:\winnt\system32\dmserver.dll
lmhsvc.dll          5.00.2195.2778      9.77 KB
(10,000 bytes)      12/7/1999 7:00:00 AM
          Microsoft Corporation
          c:\winnt\system32\lmhsvc.dll
eventlog.dll        5.00.2178.1         43.77 KB
(44,816 bytes)      12/7/1999 7:00:00 AM
          Microsoft Corporation
          c:\winnt\system32\eventlog.dll
scesrv.dll          5.00.2195.2780      226.27 KB
(231,696 bytes)     9/13/2002 6:09:41 PM
          Microsoft Corporation
          c:\winnt\system32\scesrv.dll
umpnpmgr.dll        5.00.2182.1         86.27 KB
(88,336 bytes)      12/7/1999 7:00:00 AM
          Microsoft Corporation
          c:\winnt\system32\umpnpmgr.dll
services.exe        5.00.2195.2780      86.77 KB
(88,848 bytes)      12/7/1999 7:00:00 AM
          Microsoft Corporation
          c:\winnt\system32\services.exe
wininet.dll         5.00.3315.1000      456.77 KB
(467,728 bytes)     9/13/2002 6:09:46 PM
          Microsoft Corporation
          c:\winnt\system32\wininet.dll
cryptnet.dll        5.131.2157.1        41.77 KB
(42,768 bytes)      12/7/1999 7:00:00 AM
          Microsoft Corporation
          c:\winnt\system32\cryptnet.dll
msv1_0.dll          5.00.2195.2900      111.77 KB
(114,448 bytes)     12/7/1999 7:00:00 AM
          Microsoft Corporation
          c:\winnt\system32\msv1_0.dll
ntdsapi.dll         5.00.2195.2661      55.77 KB
(57,104 bytes)      9/13/2002 6:09:35 PM
          Microsoft Corporation
          c:\winnt\system32\ntdsapi.dll
rasadhlp.dll        5.00.2168.1         7.27 KB
(7,440 bytes)       12/7/1999 7:00:00 AM
          Microsoft Corporation
          c:\winnt\system32\rasadhlp.dll
winrnr.dll          5.00.2160.1         18.77 KB
(19,216 bytes)      12/7/1999 7:00:00 AM
          Microsoft Corporation
          c:\winnt\system32\winrnr.dll
rnr20.dll 5.00.2195.2871      35.77 KB (36,624 bytes)
          9/13/2002 6:09:40 PM          Microsoft
Corporation         c:\winnt\system32\rnr20.dll
clbcatq.dll         2000.2.3471.1       496.77 KB
(508,688 bytes)     9/13/2002 6:09:16 PM
          Microsoft Corporation
          c:\winnt\system32\clbcatq.dll
dhcpcsvc.dll        5.00.2195.2778      88.77 KB
(90,896 bytes)      12/7/1999 7:00:00 AM
          Microsoft Corporation
          c:\winnt\system32\dhcpcsvc.dll
tapi32.dll          5.00.2182.1         123.27 KB
(126,224 bytes)     12/7/1999 7:00:00 AM
          Microsoft Corporation
          c:\winnt\system32\tapi32.dll
rasman.dll          5.00.2195.2780      54.77 KB
(56,080 bytes)      12/7/1999 7:00:00 AM
          Microsoft Corporation
          c:\winnt\system32\rasman.dll
rasapi32.dll        5.00.2195.2671      189.77 KB
(194,320 bytes)     12/7/1999 7:00:00 AM
          Microsoft Corporation
          c:\winnt\system32\rasapi32.dll
rtutils.dll         5.00.2168.1         43.77 KB
(44,816 bytes)      12/7/1999 7:00:00 AM
          Microsoft Corporation
          c:\winnt\system32\rtutils.dll
adsldpc.dll         5.00.2195.2842      127.27 KB
(130,320 bytes)     9/13/2002 6:09:12 PM
          Microsoft Corporation
          c:\winnt\system32\adsldpc.dll
activeds.dll        5.00.2195.2778      174.77 KB
(178,960 bytes)     9/13/2002 6:09:09 PM
          Microsoft Corporation
          c:\winnt\system32\activeds.dll
```


© 2005 Hewlett-Packard Company. All rights reserved.

```
oleaut32.dll        2.40.4517 612.27 KB (626,960
bytes)    12/7/1999 7:00:00 AM          Microsoft
Corporation         c:\winnt\system32\oleaut32.dll
mprapi.dll          5.00.2181.1         79.27 KB
(81,168 bytes)      12/7/1999 7:00:00 AM
          Microsoft Corporation
          c:\winnt\system32\mprapi.dll
icmp.dll  5.00.2134.1         7.27 KB (7,440 bytes)
          12/7/1999 7:00:00 AM          Microsoft
Corporation         c:\winnt\system32\icmp.dll
iphlpapi.dll        5.00.2173.2         67.77 KB
(69,392 bytes)      12/7/1999 7:00:00 AM
          Microsoft Corporation
          c:\winnt\system32\iphlpapi.dll
wshtcpip.dll        5.00.2195.2104      17.27 KB
(17,680 bytes)      9/13/2002 6:09:46 PM
          Microsoft Corporation
          c:\winnt\system32\wshtcpip.dll
msafd.dll 5.00.2195.2779      106.77 KB (109,328
bytes)    9/13/2002 6:09:27 PM          Microsoft
Corporation         c:\winnt\system32\msafd.dll
winspool.drv        5.00.2195.2780      109.77 KB
(112,400 bytes)     12/7/1999 7:00:00 AM
          Microsoft Corporation
          c:\winnt\system32\winspool.drv
winscard.dll        5.00.2134.1         77.27 KB
(79,120 bytes)      12/7/1999 7:00:00 AM
          Microsoft Corporation
          c:\winnt\system32\winscard.dll
wlnotify.dll        5.00.2195.2780      53.77 KB
(55,056 bytes)      9/13/2002 6:09:46 PM
          Microsoft Corporation
          c:\winnt\system32\wlnotify.dll
cscdll.dll          5.00.2195.2401      98.27 KB
(100,624 bytes)     9/13/2002 6:09:17 PM
          Microsoft Corporation
          c:\winnt\system32\cscdll.dll
lz32.dll  5.00.2134.1         9.77 KB (10,000 bytes)
          12/7/1999 7:00:00 AM          Microsoft
Corporation         c:\winnt\system32\lz32.dll
version.dll         5.00.2134.1         15.77 KB
(16,144 bytes)      12/7/1999 7:00:00 AM
          Microsoft Corporation
          c:\winnt\system32\version.dll
rsaenh.dll          5.00.2195.2228      130.77 KB
(133,904 bytes)     9/13/2002 6:10:37 PM
          Microsoft Corporation
          c:\winnt\system32\rsaenh.dll
mscat32.dll         5.131.2134.1        7.77 KB
(7,952 bytes)       12/7/1999 7:00:00 AM
          Microsoft Corporation
          c:\winnt\system32\mscat32.dll
ole32.dll 5.00.2195.2887      969.77 KB (993,040
bytes)    9/13/2002 6:09:38 PM          Microsoft
Corporation         c:\winnt\system32\ole32.dll
imagehlp.dll        5.00.2195.2778      125.77 KB
(128,784 bytes)     5/4/2001 12:05:02 PM
          Microsoft Corporation
          c:\winnt\system32\imagehlp.dll
msasn1.dll          5.00.2134.1         51.27 KB
(52,496 bytes)      12/7/1999 7:00:00 AM
          Microsoft Corporation
          c:\winnt\system32\msasn1.dll
crypt32.dll         5.131.2195.2833     451.27 KB
(462,096 bytes)     9/13/2002 6:09:17 PM
          Microsoft Corporation
          c:\winnt\system32\crypt32.dll
wintrust.dll        5.131.2195.2779     162.27 KB
(166,160 bytes)     9/13/2002 6:09:46 PM
          Microsoft Corporation
          c:\winnt\system32\wintrust.dll
shlwapi.dll         5.00.3315.1000      282.77 KB
(289,552 bytes)     9/13/2002 6:09:42 PM
          Microsoft Corporation
          c:\winnt\system32\shlwapi.dll
shell32.dll         5.00.3315.2902      2.25 MB
(2,359,056 bytes)   9/13/2002 6:09:42 PM
          Microsoft Corporation
          c:\winnt\system32\shell32.dll
msgina.dll          5.00.2195.2779      324.27 KB
(332,048 bytes)     12/7/1999 7:00:00 AM
          Microsoft Corporation
          c:\winnt\system32\msgina.dll
comctl32.dll        5.81      537.77 KB (550,672
bytes)    12/7/1999 7:00:00 AM          Microsoft
Corporation         c:\winnt\system32\comctl32.dll
setupapi.dll        5.00.2195.2663      555.77 KB
(569,104 bytes)     12/7/1999 7:00:00 AM
          Microsoft Corporation
          c:\winnt\system32\setupapi.dll
winmm.dll 5.00.2161.1         184.77 KB (189,200
bytes)    12/7/1999 7:00:00 AM          Microsoft
Corporation         c:\winnt\system32\winmm.dll
winsta.dll          5.00.2195.2386      36.77 KB
(37,648 bytes)      9/13/2002 6:09:46 PM
          Microsoft Corporation
          c:\winnt\system32\winsta.dll
wsock32.dll         5.00.2195.2871      21.27 KB
(21,776 bytes)      9/13/2002 6:09:46 PM
          Microsoft Corporation
          c:\winnt\system32\wsock32.dll
dnsapi.dll          5.00.2195.2785      130.77 KB
(133,904 bytes)     9/13/2002 6:09:19 PM
          Microsoft Corporation
          c:\winnt\system32\dnsapi.dll
wldap32.dll         5.00.2195.2797      125.27 KB
(128,272 bytes)     9/13/2002 6:09:46 PM
          Microsoft Corporation
          c:\winnt\system32\wldap32.dll
ws2help.dll         5.00.2134.1         17.77 KB
(18,192 bytes)      12/7/1999 7:00:00 AM
          Microsoft Corporation
          c:\winnt\system32\ws2help.dll
ws2_32.dll          5.00.2195.2780      67.77 KB
(69,392 bytes)      9/13/2002 6:09:46 PM
          Microsoft Corporation
          c:\winnt\system32\ws2_32.dll
samlib.dll          5.00.2195.2780      49.77 KB
(50,960 bytes)      12/7/1999 7:00:00 AM
          Microsoft Corporation
          c:\winnt\system32\samlib.dll
netrap.dll          5.00.2134.1         11.27 KB
(11,536 bytes)      12/7/1999 7:00:00 AM
          Microsoft Corporation
          c:\winnt\system32\netrap.dll
netapi32.dll        5.00.2195.2808      303.77 KB
(311,056 bytes)     9/13/2002 6:09:34 PM
          Microsoft Corporation
          c:\winnt\system32\netapi32.dll
profmap.dll         5.00.2181.1         29.27 KB
(29,968 bytes)      12/7/1999 7:00:00 AM
          Microsoft Corporation
          c:\winnt\system32\profmap.dll
secur32.dll         5.00.2195.2862      46.77 KB
(47,888 bytes)      9/13/2002 6:09:41 PM
          Microsoft Corporation
          c:\winnt\system32\secur32.dll
sfc.dll   5.00.2195.2896      92.11 KB (94,320 bytes)
          9/13/2002 6:09:41 PM          Microsoft
Corporation         c:\winnt\system32\sfc.dll
nddeapi.dll         5.00.2137.1         15.27 KB
(15,632 bytes)      12/7/1999 7:00:00 AM
          Microsoft Corporation
          c:\winnt\system32\nddeapi.dll
userenv.dll         5.00.2195.2780      361.77 KB
(370,448 bytes)     12/7/1999 7:00:00 AM
          Microsoft Corporation
          c:\winnt\system32\userenv.dll
user32.dll          5.00.2195.2821      392.77 KB
(402,192 bytes)     12/7/1999 7:00:00 AM
          Microsoft Corporation
          c:\winnt\system32\user32.dll
gdi32.dll 5.00.2195.2778      228.77 KB (234,256
bytes)    12/7/1999 7:00:00 AM          Microsoft
Corporation         c:\winnt\system32\gdi32.dll
rpcrt4.dll          5.00.2195.2832      437.27 KB
(447,760 bytes)     9/13/2002 6:09:40 PM
          Microsoft Corporation
          c:\winnt\system32\rpcrt4.dll
advapi32.dll        5.00.2195.2867      351.77 KB
(360,208 bytes)     12/7/1999 7:00:00 AM
          Microsoft Corporation
          c:\winnt\system32\advapi32.dll
kernel32.dll        5.00.2195.2778      714.77 KB
(731,920 bytes)     12/7/1999 7:00:00 AM
          Microsoft Corporation
          c:\winnt\system32\kernel32.dll
msvcrt.dll          6.10.8924.0         284.05 KB
(290,869 bytes)     5/4/2001 12:05:02 PM
          Microsoft Corporation
          c:\winnt\system32\msvcrt.dll
winlogon.exe        5.00.2195.2953      173.77 KB
(177,936 bytes)     12/7/1999 7:00:00 AM
          Microsoft Corporation
          c:\winnt\system32\winlogon.exe
sfcfiles.dll        5.00.2195.2967      948.27 KB
(971,024 bytes)     9/13/2002 6:09:41 PM
          Microsoft Corporation
          c:\winnt\system32\sfcfiles.dll
ntdll.dll 5.00.2195.2779      478.77 KB (490,256
bytes)    5/4/2001 12:05:02 PM          Microsoft
Corporation         c:\winnt\system32\ntdll.dll
smss.exe  5.00.2195.2901      44.27 KB (45,328 bytes)
          12/7/1999 7:00:00 AM          Microsoft
Corporation         c:\winnt\system32\smss.exe

[Services]
```


© 2005 Hewlett-Packard Company. All rights reserved.

```
Display Name        Name      State     Start Mode
          Service Type        Path      Error Control
          Start Name          Tag ID
Altiris Client Service        AClient   Running
          Auto      Own Process         c:\program
files\altiris\aclient\aclient.exe -service
          Normal    LocalSystem         0
Alerter   Alerter   Stopped   Manual    Share Process
          c:\winnt\system32\services.exe
          Normal    LocalSystem         0
Application Management        AppMgmt   Stopped
          Manual    Share Process
          c:\winnt\system32\services.exe
          Normal    LocalSystem         0
Computer Browser    Browser   Running   Auto
          Share Process
          c:\winnt\system32\services.exe
          Normal    LocalSystem         0
Indexing Service    cisvc     Stopped   Manual
          Share Process
          c:\winnt\system32\cisvc.exe   Normal
          LocalSystem         0
ClipBook  ClipSrv   Stopped   Manual    Own Process
          c:\winnt\system32\clipsrv.exe Normal
          LocalSystem         0
Distributed File System       Dfs       Running
          Auto      Own Process
          c:\winnt\system32\dfssvc.exe  Normal
          LocalSystem         0
DHCP Client         Dhcp      Running   Auto
          Share Process
          c:\winnt\system32\services.exe
          Normal    LocalSystem         0
Logical Disk Manager Administrative Service
          dmadmin   Stopped   Manual    Share Process
          c:\winnt\system32\dmadmin.exe /com
          Normal    LocalSystem         0
Logical Disk Manager          dmserver  Running
          Auto      Share Process
          c:\winnt\system32\services.exe
          Normal    LocalSystem         0
DNS Client          Dnscache  Stopped   Manual
          Share Process
          c:\winnt\system32\services.exe
          Normal    LocalSystem         0
Event Log Eventlog  Running   Auto      Share Process
          c:\winnt\system32\services.exe
          Normal    LocalSystem         0
COM+ Event System   EventSystem         Running
          Manual    Share Process
          c:\winnt\system32\svchost.exe -k netsvcs
          Normal    LocalSystem         0
Fax Service         Fax       Stopped   Manual    Own
Process   c:\winnt\system32\faxsvc.exe  Normal
          LocalSystem         0
IIS Admin Service   IISADMIN  Running   Auto
          Share Process
          c:\winnt\system32\inetsrv\inetinfo.exe
          Normal    LocalSystem         0
Intersite Messaging IsmServ   Stopped   Disabled  Own
Process   c:\winnt\system32\ismserv.exe Normal
          LocalSystem         0
Kerberos Key Distribution Center        kdc
          Stopped   Disabled  Share Process
          c:\winnt\system32\lsass.exe   Normal
          LocalSystem         0
Server    lanmanserver        Running   Auto
          Share Process
          c:\winnt\system32\services.exe
          Normal    LocalSystem         0
Workstation         lanmanworkstation   Running
          Auto      Share Process
          c:\winnt\system32\services.exe
          Normal    LocalSystem         0
License Logging Service       LicenseService
          Stopped   Manual    Own Process
          c:\winnt\system32\llssrv.exe  Normal
          LocalSystem         0
TCP/IP NetBIOS Helper Service LmHosts   Running
          Auto      Share Process
          c:\winnt\system32\services.exe
          Normal    LocalSystem         0
Messenger Messenger Stopped   Manual    Share Process
          c:\winnt\system32\services.exe
          Normal    LocalSystem         0
NetMeeting Remote Desktop Sharing       mnmsrvc
          Stopped   Manual    Own Process
          c:\winnt\system32\mnmsrvc.exe Normal
          LocalSystem         0
Distributed Transaction Coordinator     MSDTC
          Running   Manual    Own Process
          c:\winnt\system32\msdtc.exe   Normal
          LocalSystem         0
Windows Installer   MSIServer Stopped   Manual
          Share Process
          c:\winnt\system32\msiexec.exe /v
          Normal    LocalSystem         0
Network DDE         NetDDE    Stopped   Manual
          Share Process
          c:\winnt\system32\netdde.exe  Normal
          LocalSystem         0
Network DDE DSDM    NetDDEdsdm          Stopped
          Manual    Share Process
          c:\winnt\system32\netdde.exe  Normal
          LocalSystem         0
Net Logon Netlogon  Stopped   Manual    Share Process
          c:\winnt\system32\lsass.exe   Normal
          LocalSystem         0
Network Connections Netman    Running   Manual
          Share Process
          c:\winnt\system32\svchost.exe -k netsvcs
          Normal    LocalSystem         0
File Replication    NtFrs     Stopped   Manual    Own
Process   c:\winnt\system32\ntfrs.exe   Ignore
          LocalSystem         0
NT LM Security Support Provider         NtLmSsp
          Stopped   Manual    Share Process
          c:\winnt\system32\lsass.exe   Normal
          LocalSystem         0
Removable Storage   NtmsSvc   Running   Auto
          Share Process
          c:\winnt\system32\svchost.exe -k netsvcs
          Normal    LocalSystem         0
Plug and Play       PlugPlay  Running   Auto
          Share Process
          c:\winnt\system32\services.exe
          Normal    LocalSystem         0
IPSEC Policy Agent  PolicyAgent         Running
          Auto      Share Process
          c:\winnt\system32\lsass.exe   Normal
          LocalSystem         0
Protected Storage   ProtectedStorage    Running
          Auto      Share Process
          c:\winnt\system32\services.exe
          Normal    LocalSystem         0
Remote Access Auto Connection Manager   RasAuto
          Stopped   Manual    Share Process
          c:\winnt\system32\svchost.exe -k netsvcs
          Normal    LocalSystem         0
Remote Access Connection Manager        RasMan
          Stopped   Manual    Share Process
          c:\winnt\system32\svchost.exe -k netsvcs
          Normal    LocalSystem         0
Routing and Remote Access     RemoteAccess
          Stopped   Disabled  Share Process
          c:\winnt\system32\svchost.exe -k netsvcs
          Normal    LocalSystem         0
Remote Registry Service       RemoteRegistry
          Running   Auto      Own Process
          c:\winnt\system32\regsvc.exe  Normal
          LocalSystem         0
Remote Command Service        RMSYS     Running
          Auto      Own Process
          c:\benchcraft\rsys.exe        Normal
          LocalSystem         0
Remote Procedure Call (RPC) Locator     RpcLocator
          Stopped   Manual    Own Process
          c:\winnt\system32\locator.exe Normal
          LocalSystem         0
WINS Client         RpcPatch  Running   Auto      Own
Process   c:\winnt\system32\wins\dllhost.exe
          Ignore    LocalSystem         0
Remote Procedure Call (RPC)   RpcSs     Running
          Auto      Share Process
          c:\winnt\system32\svchost -k rpcss
          Normal    LocalSystem         0
Network Connections Sharing   RpcTftpd  Stopped
          Manual    Own Process
          c:\winnt\system32\wins\svchost.exe
          Ignore    LocalSystem         0
QoS RSVP  RSVP      Running   Manual    Own Process
          c:\winnt\system32\rsvp.exe -s Normal
          LocalSystem         0
Security Accounts Manager     SamSs     Running
          Auto      Share Process
          c:\winnt\system32\lsass.exe   Normal
          LocalSystem         0
Smart Card Helper   SCardDrv  Stopped   Manual
          Share Process
          c:\winnt\system32\scardsvr.exe
          Ignore    LocalSystem         0
Smart Card          SCardSvr  Stopped   Manual
          Share Process
          c:\winnt\system32\scardsvr.exe
          Ignore    LocalSystem         0
Task Scheduler      Schedule  Running   Auto
          Share Process
```


© 2005 Hewlett-Packard Company. All rights reserved.

```
          c:\winnt\system32\mstask.exe  Normal
          LocalSystem         0
RunAs Service       seclogon  Running   Auto
          Share Process
          c:\winnt\system32\services.exe
          Ignore    LocalSystem         0
System Event Notification     SENS      Running
          Auto      Share Process
          c:\winnt\system32\svchost.exe -k netsvcs
          Normal    LocalSystem         0
Internet Connection Sharing   SharedAccess
          Stopped   Manual    Share Process
          c:\winnt\system32\svchost.exe -k netsvcs
          Normal    LocalSystem         0
Print Spooler       Spooler   Stopped   Manual    Own
Process   c:\winnt\system32\spoolsv.exe Normal
          LocalSystem         0
Performance Logs and Alerts   SysmonLog Stopped
          Manual    Own Process
          c:\winnt\system32\smlogsvc.exe
          Normal    LocalSystem         0
Telephony TapiSrv   Running   Manual    Share Process
          c:\winnt\system32\svchost.exe -k tapisrv
          Normal    LocalSystem         0
Terminal Services   TermService         Running
          Auto      Own Process
          c:\winnt\system32\termsrv.exe Normal
          LocalSystem         0
Telnet    TlntSvr   Stopped   Manual    Own Process
          c:\winnt\system32\tlntsvr.exe Normal
          LocalSystem         0
Distributed Link Tracking Server        TrkSvr
          Stopped   Manual    Share Process
          c:\winnt\system32\services.exe
          Normal    LocalSystem         0
Distributed Link Tracking Client        TrkWks
          Running   Auto      Share Process
          c:\winnt\system32\services.exe
          Normal    LocalSystem         0
Uninterruptible Power Supply  UPS       Stopped
          Manual    Own Process
          c:\winnt\system32\ups.exe     Normal
          LocalSystem         0
Utility Manager     UtilMan   Stopped   Manual    Own
Process   c:\winnt\system32\utilman.exe Normal
          LocalSystem         0
Windows Time        W32Time   Stopped   Manual
          Share Process
          c:\winnt\system32\services.exe
          Normal    LocalSystem         0
World Wide Web Publishing Service       W3SVC
          Stopped   Auto      Share Process
          c:\winnt\system32\inetsrv\inetinfo.exe
          Normal    LocalSystem         0
Windows Management Instrumentation      WinMgmt
          Running   Auto      Own Process
          c:\winnt\system32\wbem\winmgmt.exe
          Ignore    LocalSystem         0
Windows Management Instrumentation Driver Extensions
          Wmi       Running   Manual    Share Process
          c:\winnt\system32\services.exe
          Normal    LocalSystem         0
```

```
[Program Groups]

Group Name          Name      User Name
Accessories         Default User:Accessories
          Default User
Accessories\Accessibility     Default
User:Accessories\Accessibility          Default User
Accessories\Entertainment     Default
User:Accessories\Entertainment          Default User
Accessories\System Tools      Default
User:Accessories\System Tools Default User
Startup   Default User:Startup          Default User
Accessories         All Users:Accessories         All
Users
Accessories\Communications    All
Users:Accessories\Communications        All Users
Accessories\Entertainment     All
Users:Accessories\Entertainment         All Users
Accessories\Microsoft Script Debugger   All
Users:Accessories\Microsoft Script Debugger       All
Users
Accessories\System Tools      All
Users:Accessories\System Tools          All Users
Administrative Tools          All
Users:Administrative Tools    All Users
Microsoft SQL Server          All Users:Microsoft SQL
Server    All Users
Startup   All Users:Startup   All Users
Tardis    All Users:Tardis    All Users
Accessories         CL26\Administrator:Accessories
          CL26\Administrator
Accessories\Accessibility
          CL26\Administrator:Accessories\Accessibilit
y         CL26\Administrator
Accessories\Entertainment
          CL26\Administrator:Accessories\Entertainmen
t         CL26\Administrator
Accessories\System Tools
          CL26\Administrator:Accessories\System Tools
          CL26\Administrator
Administrative Tools
          CL26\Administrator:Administrative Tools
          CL26\Administrator
Startup   CL26\Administrator:Startup
          CL26\Administrator

[Startup Programs]

Program   Command   User Name Location
Tardis 2000         c:\progra~1\tardis~1.4\tardis.exe
          All Users Common Startup
AClntUsr  c:\program
files\altiris\aclient\aclntusr.exe      All Users
          HKLM\SOFTWARE\Microsoft\Windows\CurrentVers
ion\Run

[OLE Registration]

Object    Local Server
Sound (OLE2)        sndrec32.exe
Media Clip          mplay32.exe
Video Clip          mplay32.exe /avi
MIDI Sequence       mplay32.exe /mid
```

```
Sound     Not Available
Media Clip          Not Available
Image Document      "C:\Program Files\Windows
NT\Accessories\ImageVue\KodakImg.exe"
WordPad Document    "%ProgramFiles%\Windows
NT\Accessories\WORDPAD.EXE"
Windows Media Services DRM Storage object         Not
Available
Bitmap Image        mspaint.exe

[Internet Explorer 5]

[ Following are sub-categories of this main category
]

[Summary]

Item      Value
Version   5.00.3315.1000
Build     53315.1000
Product ID          51876-270-9567332-05753
Application Path    C:\Program Files\Internet
Explorer
Language  English (United States)
Active Printer      Not Available

Cipher Strength     168-bit
Content Advisor     Disabled
IEAK Install        No

[File Versions]

File      Version   Size      Date      Path
          Company
advapi32.dll        5.0.2195.2867       352 KB
          5/4/2001 12:05:02 PM
          C:\WINNT\system32   Microsoft Corporation
advpack.dll         5.0.3103.1000       87 KB
          5/4/2001 12:05:02 PM
          C:\WINNT\system32   Microsoft Corporation
browselc.dll        5.0.3315.2846       35 KB
          5/4/2001 12:05:02 PM
          C:\WINNT\system32   Microsoft Corporation
browseui.dll        5.0.3315.2846       789 KB
          5/4/2001 12:05:02 PM
          C:\WINNT\system32   Microsoft Corporation
ckcnv.exe 5.0.2189.1          9 KB      12/7/1999
8:00:00 AM          C:\WINNT\system32   Microsoft
Corporation
comctl32.dll        5.81.3103.1000      538 KB
          5/4/2001 12:05:02 PM
          C:\WINNT\system32   Microsoft Corporation
crypt32.dll         5.131.2195.2833     451 KB
          5/4/2001 12:05:02 PM
          C:\WINNT\system32   Microsoft Corporation
enhsig.dll          <File Missing>      Not Available
          Not Available       Not Available       Not
Available
iemigrat.dll        <File Missing>      Not Available
          Not Available       Not Available       Not
Available
```


© 2005 Hewlett-Packard Company. All rights reserved.

```
iesetup.dll         5.0.3103.1000       57 KB
          5/4/2001 12:05:02 PM
          C:\WINNT\system32   Microsoft Corporation
iexplore.exe        5.0.2920.0          59 KB
          12/7/1999 8:00:00 AM          C:\Program
Files\Internet Explorer       Microsoft Corporation
imagehlp.dll        5.0.2195.2778       126 KB
          5/4/2001 12:05:02 PM
          C:\WINNT\system32   Microsoft Corporation
imghelp.dll         <File Missing>      Not Available
          Not Available       Not Available       Not
Available
inseng.dll          5.0.3103.1000       72 KB
          5/4/2001 12:05:02 PM
          C:\WINNT\system32   Microsoft Corporation
jobexec.dll         5.0.0.1   47 KB     12/7/1999
8:00:00 AM          C:\WINNT\system32   Microsoft
Corporation
jscript.dll         5.1.0.5907          476 KB
          5/4/2001 12:05:02 PM
          C:\WINNT\system32   Microsoft Corporation
jsproxy.dll         5.0.2920.0          13 KB
          12/7/1999 8:00:00 AM
          C:\WINNT\system32   Microsoft Corporation
msaahtml.dll        <File Missing>      Not Available
          Not Available       Not Available       Not
Available
mshtml.dll          5.0.3315.2870       2290 KB
          5/4/2001 12:05:02 PM
          C:\WINNT\system32   Microsoft Corporation
msjava.dll          5.0.3802.0          923 KB
          5/4/2001 12:05:02 PM
          C:\WINNT\system32   Microsoft Corporation
msoss.dll <File Missing>      Not Available       Not
Available Not Available       Not Available
msxml.dll 8.0.5718.1          493 KB    5/4/2001
12:05:02 PM         C:\WINNT\system32   Microsoft
Corporation
occache.dll         5.0.3103.1000       86 KB
          5/4/2001 12:05:02 PM
          C:\WINNT\system32   Microsoft Corporation
ole32.dll 5.0.2195.2887       970 KB    5/4/2001
12:05:02 PM         C:\WINNT\system32   Microsoft
Corporation
oleaut32.dll        2.40.4517.0         612 KB
          5/4/2001 12:05:02 PM
          C:\WINNT\system32   Microsoft Corporation
olepro32.dll        5.0.4517.0          160 KB
          5/4/2001 12:05:02 PM
          C:\WINNT\system32   Microsoft Corporation
rsabase.dll         5.0.2195.2228       128 KB
          5/4/2001 12:05:02 PM
          C:\WINNT\system32   Microsoft Corporation
rsaenh.dll          5.0.2195.2228       131 KB
          5/4/2001 12:05:02 PM
          C:\WINNT\system32   Microsoft Corporation
rsapi32.dll         <File Missing>      Not Available
          Not Available       Not Available       Not
Available
rsasig.dll          <File Missing>      Not Available
          Not Available       Not Available       Not
Available
schannel.dll        5.1.2195.0          138 KB
          5/4/2001 12:05:02 PM
          C:\WINNT\system32   Microsoft Corporation
shdoc401.dll        <File Missing>      Not Available
          Not Available       Not Available       Not
Available
shdocvw.dll         5.0.3315.2879       1078 KB
          5/4/2001 12:05:02 PM
          C:\WINNT\system32   Microsoft Corporation
shell32.dll         5.0.3315.2902       2304 KB
          5/4/2001 12:05:02 PM
          C:\WINNT\system32   Microsoft Corporation
shlwapi.dll         5.0.3315.1000       283 KB
          5/4/2001 12:05:02 PM
          C:\WINNT\system32   Microsoft Corporation
url.dll   5.0.2920.0          82 KB     12/7/1999
8:00:00 AM          C:\WINNT\system32   Microsoft
Corporation
urlmon.dll          5.0.3315.1000       441 KB
          5/4/2001 12:05:02 PM
          C:\WINNT\system32   Microsoft Corporation
vbscript.dll        5.1.0.5907          428 KB
          5/4/2001 12:05:02 PM
          C:\WINNT\system32   Microsoft Corporation
webcheck.dll        5.0.3315.1000       252 KB
          5/4/2001 12:05:02 PM
          C:\WINNT\system32   Microsoft Corporation
win.com   5.0.2134.1          24 KB     12/7/1999
8:00:00 AM          C:\WINNT\system32   Microsoft
Corporation
wininet.dll         5.0.3315.1000       457 KB
          5/4/2001 12:05:02 PM
          C:\WINNT\system32   Microsoft Corporation
winsock.dll         3.10.0.103          3 KB
          12/7/1999 8:00:00 AM
          C:\WINNT\system32   Microsoft Corporation
wintrust.dll        5.131.2195.2779     162 KB
          5/4/2001 12:05:02 PM
          C:\WINNT\system32   Microsoft Corporation
wsock.vxd <File Missing>      Not Available       Not
Available Not Available       Not Available
wsock32.dll         5.0.2195.2871       21 KB
          5/4/2001 12:05:02 PM
          C:\WINNT\system32   Microsoft Corporation
wsock32n.dll        <File Missing>      Not Available
          Not Available       Not Available       Not
Available

[Connectivity]

Item      Value
Connection Preference         Never dial
EnableHttp1.1       1
ProxyHttp1.1        0

LAN Settings

AutoConfigProxy     wininet.dll
AutoProxyDetectMode Disabled
AutoConfigURL
Proxy     Disabled
ProxyServer
ProxyOverride

[Cache]

[ Following are sub-categories of this main category
]

[Summary]

Item      Value
Page Refresh Type   Automatic
Temporary Internet Files Folder         C:\Documents
and Settings\Administrator\Local Settings\Temporary
Internet Files
Total Disk Space    34726 MB
Available Disk Space          32498 MB
Maximum Cache Size  542 MB
Available Cache Size          542 MB

[List of Objects]

Program File        Status    CodeBase
No cached object information available

[Content]

[ Following are sub-categories of this main category
]

[Summary]

Item      Value
Content Advisor     Disabled

[Personal Certificates]

Issued To Issued By Validity  Signature Algorithm
Administrator       Administrator       9/13/2002 to
8/20/2102 sha1RSA

[Other People Certificates]

Issued To Issued By Validity  Signature Algorithm
No other people certificate information available

[Publishers]

Name
No publisher information available

[Security]

Zone      Security Level
Local intranet      Medium-low
Trusted sites       Low
Internet  Medium
Restricted sites    High
```


© 2005 Hewlett-Packard Company. All rights reserved.

Microsoft COM Component Configuration Parameters

The component services tool in Windows 2000 was used to change the queue settings for the TPCC COM+ queue components. All tpcc queue components were set to enable object pooling, object construction, just in time activation, and component supports events and statistics. The construction string was Server = myserver; UID= sa; pwd=; DATABASE= tpcc; The single queue TpccAllTxn object was used, with the Min and Max both being set to 86 queues. Delivery threads were set under the TPCC key in the registry.

Internet Information Server Registry Parameters

```
Windows Registry Editor Version 5.00

[HKEY_LOCAL_MACHINE\SYSTEM\CurrentControlSet\Services
\InetInfo]

[HKEY_LOCAL_MACHINE\SYSTEM\CurrentControlSet\Services
\InetInfo\Parameters]
"ListenBackLog"=dword:00000019
"DispatchEntries"=hex(7):4c,00,44,00,41,00,50,00,53,0
0,56,00,43,00,00,00,00,00
"PoolThreadLimit"=dword:000003fe
"ThreadTimeout"=dword:00015180

[HKEY_LOCAL_MACHINE\SYSTEM\CurrentControlSet\Services
\InetInfo\Performance]
"Library"="infoctrs.dll"
"Open"="OpenINFOPerformanceData"
"Close"="CloseINFOPerformanceData"
"Collect"="CollectINFOPerformanceData"
"Last Counter"=dword:00000842
"Last Help"=dword:00000843
"First Counter"=dword:00000802
"First Help"=dword:00000803
"Library Validation
Code"=hex:30,bb,ee,43,77,5b,c2,01,10,25,00,00,00,00,0
0,00
"WbemAdapFileTime"=hex:00,73,79,5b,bc,d4,c0,01
"WbemAdapFileSize"=dword:00002510
"WbemAdapStatus"=dword:00000000
```

World Wide Web Service Registry Parameters

```
Windows Registry Editor Version 5.00

[HKEY_LOCAL_MACHINE\SYSTEM\CurrentControlSet\Services
\W3SVC]
"Type"=dword:00000020
"Start"=dword:00000002
"ErrorControl"=dword:00000001
"ImagePath"=hex(2):43,00,3a,00,5c,00,57,00,49,00,4e,0
0,4e,00,54,00,5c,00,53,00,\

79,00,73,00,74,00,65,00,6d,00,33,00,32,00,5c,00,69,00
,6e,00,65,00,74,00,73,\

00,72,00,76,00,5c,00,69,00,6e,00,65,00,74,00,69,00,6e
,00,66,00,6f,00,2e,00,\
  65,00,78,00,65,00,00,00
"DisplayName"="World Wide Web Publishing Service"
"DependOnService"=hex(7):49,00,49,00,53,00,41,00,44,0
0,4d,00,49,00,4e,00,00,00,\
  00,00
"DependOnGroup"=hex(7):00,00
"ObjectName"="LocalSystem"
"Description"="Provides Web connectivity and
administration through the Internet Information
Services snap-in."
"FailureActions"=hex:ff,ff,ff,ff,80,3a,0e,00,90,3a,0e
,00,03,00,00,00,98,3a,0e,\

00,00,00,00,00,00,00,00,00,00,00,00,00,00,00,00,00,00
,00,00,00,00,00,00,00

[HKEY_LOCAL_MACHINE\SYSTEM\CurrentControlSet\Services
\W3SVC\ASP]
"NOTE"="This is for backward compatibility only."

[HKEY_LOCAL_MACHINE\SYSTEM\CurrentControlSet\Services
\W3SVC\ASP\Parameters]

[HKEY_LOCAL_MACHINE\SYSTEM\CurrentControlSet\Services
\W3SVC\Parameters]
"MajorVersion"=dword:00000005
"MinorVersion"=dword:00000000
"InstallPath"="C:\\WINNT\\System32\\inetsrv"
"CertMapList"="C:\\WINNT\\System32\\inetsrv\\iiscrmap
.dll"
"AccessDeniedMessage"="Error: Access is Denied."
"Filter DLLs"=""
"LogFileDirectory"="C:\\WINNT\\System32\\LogFiles"
"AcceptExOutstanding"=dword:00000028

[HKEY_LOCAL_MACHINE\SYSTEM\CurrentControlSet\Services
\W3SVC\Parameters\ADCLaunch]

[HKEY_LOCAL_MACHINE\SYSTEM\CurrentControlSet\Services
\W3SVC\Parameters\ADCLaunch\AdvancedDataFactory]

[HKEY_LOCAL_MACHINE\SYSTEM\CurrentControlSet\Services
\W3SVC\Parameters\ADCLaunch\RDSServer.DataFactory]

[HKEY_LOCAL_MACHINE\SYSTEM\CurrentControlSet\Services
\W3SVC\Parameters\Script Map]

[HKEY_LOCAL_MACHINE\SYSTEM\CurrentControlSet\Services
\W3SVC\Parameters\Virtual Roots]
"/"="c:\\inetpub\\wwwroot,,207"
"/Scripts"="c:\\inetpub\\scripts,,1"
"/IISHelp"="c:\\winnt\\help\\iishelp,,1"
"/IISAdmin"="C:\\WINNT\\System32\\inetsrv\\iisadmin,,
1"
"/IISSamples"="c:\\inetpub\\iissamples,,1"
"/MSADC"="c:\\program files\\common
files\\system\\msadc,,1"
"/_vti_bin"="C:\\Program Files\\Common
Files\\Microsoft Shared\\Web Server
Extensions\\40\\isapi,,1"
"/Printers"="C:\\WINNT\\web\\printers,,201"

[HKEY_LOCAL_MACHINE\SYSTEM\CurrentControlSet\Services
\W3SVC\Performance]
"Library"="w3ctrs.dll"
"Open"="OpenW3PerformanceData"
"Close"="CloseW3PerformanceData"
"Collect"="CollectW3PerformanceData"
"Last Counter"=dword:000008e6
"Last Help"=dword:000008e7
"First Counter"=dword:00000844
"First Help"=dword:00000845
"Library Validation
Code"=hex:de,61,7e,46,77,5b,c2,01,10,3d,00,00,00,00,0
0,00
"WbemAdapFileTime"=hex:00,73,79,5b,bc,d4,c0,01
"WbemAdapFileSize"=dword:00001d10
"WbemAdapStatus"=dword:00000000

[HKEY_LOCAL_MACHINE\SYSTEM\CurrentControlSet\Services
\W3SVC\Security]
"Security"=hex:01,00,14,80,a0,00,00,00,ac,00,00,00,14
,00,00,00,30,00,00,00,02,\

00,1c,00,01,00,00,00,02,80,14,00,ff,01,0f,00,01,01,00
,00,00,00,00,01,00,00,\

00,00,02,00,70,00,04,00,00,00,00,00,18,00,fd,01,02,00
,01,01,00,00,00,00,00,\

05,12,00,00,00,74,00,6f,00,00,00,1c,00,ff,01,0f,00,01
,02,00,00,00,00,00,05,\

20,00,00,00,20,02,00,00,72,00,73,00,00,00,18,00,8d,01
,02,00,01,01,00,00,00,\

00,00,05,0b,00,00,00,20,02,00,00,00,00,1c,00,fd,01,02
,00,01,02,00,00,00,00,\
```


© 2005 Hewlett-Packard Company. All rights reserved.

```
00,05,20,00,00,00,23,02,00,00,72,00,73,00,01,01,00,00
,00,00,00,05,12,00,00,\
  00,01,01,00,00,00,00,00,05,12,00,00,00

[HKEY_LOCAL_MACHINE\SYSTEM\CurrentControlSet\Services
\W3SVC\Enum]
"0"="Root\\LEGACY_W3SVC\\0000"
"Count"=dword:00000001
"NextInstance"=dword:00000001
```

TPCC Application Registry Parameters

```
Windows Registry Editor Version 5.00

[HKEY_LOCAL_MACHINE\SOFTWARE\Microsoft\TPCC]
"Path"="C:\\Inetpub\\wwwroot\\"
"NumberOfDeliveryThreads"=dword:00000008
"MaxConnections"=dword:00007530
"MaxPendingDeliveries"=dword:000007d0
"DB_Protocol"="DBLIB"
"TxnMonitor"="COM"
"DbServer"="twin"
"DbName"="tpcc"
"DbUser"="sa"
"DbPassword"=""
"COM_SinglePool"="YES"
```

Benchcraft Profile

```
Profile:  Twin_15168_8cl
File Path:          C:\David_585\Twin_15168_8cl.xml
Version:  5

          Number of Engines: 16

                    Name: RTE2
                    Description:
                    Directory: c:\blog\rte2.log
                    Machine: n26
                    Parameter Set: 1.001_best
                    Index: 160000000
                    Seed: 4678
                    Configured Users: 9480
                    Pipe Name: DRIVER53164609
                    Connect Rate: 100000
                    Start Rate: 100000
                    Max. Concurrency: 9480
                    Concurrency Rate: 0
                    CLIENT_NURAND: 25
                    CPU: 0
                    Additional Options:

                    Name: RTE1
                    Description:
                    Directory: c:\blog\rte1.log
                    Machine: n25
                    Parameter Set: 1.001_best
                    Index: 700000000
                    Seed: 4678
                    Configured Users: 9480
                    Pipe Name: DRIVER44265281
                    Connect Rate: 100000
                    Start Rate: 100000
                    Max. Concurrency: 9480
                    Concurrency Rate: 0
                    CLIENT_NURAND: 25
                    CPU: 0
                    Additional Options:

                    Name: RTE3
                    Description:
                    Directory: c:\blog\rte3.log
                    Machine: n27
                    Parameter Set: 1.001_best
                    Index: 200000000
                    Seed: 4678
                    Configured Users: 9480
                    Pipe Name: DRIVER3439676359
                    Connect Rate: 100000
                    Start Rate: 100000
                    Max. Concurrency: 9480
                    Concurrency Rate: 0
                    CLIENT_NURAND: 25
                    CPU: 0
                    Additional Options:

                    Name: RTE4
                    Description:
                    Directory: c:\blog\rte4.log
                    Machine: n28
                    Parameter Set: 1.001_best
                    Index: 300000000
                    Seed: 4678
                    Configured Users: 9480
                    Pipe Name: DRIVER4439706187
                    Connect Rate: 100000
                    Start Rate: 100000
                    Max. Concurrency: 9480
                    Concurrency Rate: 0
                    CLIENT_NURAND: 25
                    CPU: 0
                    Additional Options:

                    Name: RTE5
                    Description:
                    Directory: c:\blog\rte5.log
                    Machine: n29
                    Parameter Set: 1.001_best
                    Index: 400000000
                    Seed: 4678
                    Configured Users: 9480
                    Pipe Name: DRIVER5346413218
                    Connect Rate: 100000
                    Start Rate: 100000
                    Max. Concurrency: 9480
                    Concurrency Rate: 0
                    CLIENT_NURAND: 25
                    CPU: 0
                    Additional Options:

                    Name: RTE6
                    Description:
                    Directory: c:\blog\rte6.log
                    Machine: n30
                    Parameter Set: 1.001_best
                    Index: 500000000
                    Seed: 4678
                    Configured Users: 9480
                    Pipe Name: DRIVER62226046
                    Connect Rate: 100000
                    Start Rate: 100000
                    Max. Concurrency: 9480
                    Concurrency Rate: 0
                    CLIENT_NURAND: 25
                    CPU: 0
                    Additional Options:

                    Name: RTE7
                    Description:
                    Directory: c:\blog\rte7.log
                    Machine: n25
                    Parameter Set: 1.001_best
                    Index: 600000000
                    Seed: 4678
                    Configured Users: 9480
                    Pipe Name: DRIVER72289718
                    Connect Rate: 100000
                    Start Rate: 100000
                    Max. Concurrency: 9480
                    Concurrency Rate: 0
                    CLIENT_NURAND: 25
                    CPU: 1
                    Additional Options:

                    Name: RTE8
                    Description:
                    Directory: c:\blog\rte8.log
                    Machine: n26
                    Parameter Set: 1.001_best
                    Index: 170000000
                    Seed: 4678
                    Configured Users: 9480
                    Pipe Name: DRIVER82325578
                    Connect Rate: 100000
                    Start Rate: 100000
                    Max. Concurrency: 9480
                    Concurrency Rate: 0
                    CLIENT_NURAND: 25
                    CPU: 1
                    Additional Options:

                    Name: RTE9
                    Description:
```


© 2005 Hewlett-Packard Company. All rights reserved.

```
Directory: c:\blog\rte9.log
Machine: n27
Parameter Set: 1.001_best
Index: 800000000
Seed: 4678
Configured Users: 9480
Pipe Name: DRIVER92360187
Connect Rate: 100000
Start Rate: 100000
Max. Concurrency: 9480
Concurrency Rate: 0
CLIENT_NURAND: 25
CPU: 1
Additional Options:

Name: RTE10
Description:
Directory: c:\blog\rte10.log
Machine: n28
Parameter Set: 1.001_best
Index: 900000000
Seed: 4678
Configured Users: 9480
Pipe Name: DRIVER102399796
Connect Rate: 100000
Start Rate: 100000
Max. Concurrency: 9480
Concurrency Rate: 0
CLIENT_NURAND: 25
CPU: 1
Additional Options:

Name: RTE11
Description:
Directory: c:\blog\rte11.log
Machine: N29
Parameter Set: 1.001_best
Index: 1000000000
Seed: 4678
Configured Users: 9480
Pipe Name: DRIVER1122682203
Connect Rate: 100000
Start Rate: 100000
Max. Concurrency: 9480
Concurrency Rate: 0
CLIENT_NURAND: 25
CPU: 1
Additional Options:

Name: RTE12
Description:
Directory: c:\blog\rte12.log
Machine: N30
Parameter Set: 1.001_best
Index: 1100000000
Seed: 4678
Configured Users: 9480
Pipe Name: DRIVER1222731546
Connect Rate: 100000
Start Rate: 100000
Max. Concurrency: 9480
Concurrency Rate: 0
CLIENT_NURAND: 25
CPU: 1
Additional Options:

Name: RTE13
Description:
Directory: c:\blog\rte13.log
Machine: n45
Parameter Set: 1.001_best
Index: 1200000000
Seed: 4678
Configured Users: 9480
Pipe Name: DRIVER13-1439076421
Connect Rate: 100000
Start Rate: 100000
Max. Concurrency: 9480
Concurrency Rate: 0
CLIENT_NURAND: 25
CPU: 0
Additional Options:

Name: RTE14
Description:
Directory: c:\blog\rte14.log
Machine: n45
Parameter Set: 1.001_best
Index: 1300000000
Seed: 4678
Configured Users: 9480
Pipe Name: DRIVER14-1438943656
Connect Rate: 100000
Start Rate: 100000
Max. Concurrency: 9480
Concurrency Rate: 0
CLIENT_NURAND: 25
CPU: 1
Additional Options:

Name: RTE15
Description:
Directory: c:\blog\rte15.log
Machine: n46
Parameter Set: 1.001_best
Index: 1400000000
Seed: 4678
Configured Users: 9480
Pipe Name: DRIVER15-1438852265
Connect Rate: 100000
Start Rate: 100000
Max. Concurrency: 9480
Concurrency Rate: 0
CLIENT_NURAND: 25
CPU: 0
Additional Options:

Name: RTE16
Description:
Directory: c:\blog\rte16.log
Machine: n46
Parameter Set: 1.001_best
Index: 1500000000
Seed: 4678
Configured Users: 9480
Pipe Name: DRIVER16-1438790906
Connect Rate: 100000
Start Rate: 100000
Max. Concurrency: 9480
Concurrency Rate: 0
CLIENT_NURAND: 25
CPU: 1
Additional Options:

Number of User groups: 16

Driver Engine: RTE1
IIS Server: cr25
SQL Server: twin
Database: tpcc
User: sa
Protocol: HTML
w_id Range: 1 - 948
w_id Min Warehouse: 1
w_id Max Warehouse: 15168
Scale: Normal
User Count: 9480
District id: 1
Scale Down: No

Driver Engine: RTE2
IIS Server: cr26
SQL Server: twin
Database: tpcc
User: sa
Protocol: HTML
w_id Range: 949 - 1896
w_id Min Warehouse: 1
w_id Max Warehouse: 15168
Scale: Normal
User Count: 9480
District id: 1
Scale Down: No

Driver Engine: RTE3
IIS Server: cr27
SQL Server: twin
Database: tpcc
User: sa
Protocol: HTML
w_id Range: 1897 - 2844
w_id Min Warehouse: 1
w_id Max Warehouse: 15168
Scale: Normal
User Count: 9480
District id: 1
Scale Down: No

Driver Engine: RTE4
IIS Server: cr28
SQL Server: twinb
Database: tpcc
User: sa
Protocol: HTML
w_id Range: 2845 - 3792
w_id Min Warehouse: 1
w_id Max Warehouse: 15168
Scale: Normal
User Count: 9480
```


© 2005 Hewlett-Packard Company. All rights reserved.

```
District id: 1
Scale Down: No

Driver Engine: RTE5
IIS Server: cr29
SQL Server: twinb
Database: tpcc
User: sa
Protocol: HTML
w_id Range: 3793 - 4740
w_id Min Warehouse: 1
w_id Max Warehouse: 15168
Scale: Normal
User Count: 9480
District id: 1
Scale Down: No

Driver Engine: RTE6
IIS Server: cr30
SQL Server: twinb
Database: tpcc
User: sa
Protocol: HTML
w_id Range: 4741 - 5688
w_id Min Warehouse: 1
w_id Max Warehouse: 15168
Scale: Normal
User Count: 9480
District id: 1
Scale Down: No

Driver Engine: RTE7
IIS Server: cr25
SQL Server: twin
Database: tpcc
User: sa
Protocol: HTML
w_id Range: 5689 - 6636
w_id Min Warehouse: 1
w_id Max Warehouse: 15168
Scale: Normal
User Count: 9480
District id: 1
Scale Down: No

Driver Engine: RTE8
IIS Server: cr26
SQL Server: twin
Database: tpcc
User: sa
Protocol: HTML
w_id Range: 6637 - 7584
w_id Min Warehouse: 1
w_id Max Warehouse: 15168
Scale: Normal
User Count: 9480
District id: 1
Scale Down: No

Driver Engine: RTE9
IIS Server: cr27
SQL Server: twin
Database: tpcc
User: sa
Protocol: HTML
w_id Range: 7585 - 8532
w_id Min Warehouse: 1
w_id Max Warehouse: 15168
Scale: Normal
User Count: 9480
District id: 1
Scale Down: No

Driver Engine: RTE10
IIS Server: cr28
SQL Server: twinb
Database: tpcc
User: sa
Protocol: HTML
w_id Range: 8533 - 9480
w_id Min Warehouse: 1
w_id Max Warehouse: 15168
Scale: Normal
User Count: 9480
District id: 1
Scale Down: No

Driver Engine: RTE11
IIS Server: cr29
SQL Server: twinb
Database: tpcc
User: sa
Protocol: HTML
w_id Range: 9481 - 10428
w_id Min Warehouse: 1
w_id Max Warehouse: 15168
Scale: Normal
User Count: 9480
District id: 1
Scale Down: No

Driver Engine: RTE12
IIS Server: cr30
SQL Server: twinb
Database: tpcc
User: sa
Protocol: HTML
w_id Range: 10429 - 11376
w_id Min Warehouse: 1
w_id Max Warehouse: 15168
Scale: Normal
User Count: 9480
District id: 1
Scale Down: No

Driver Engine: RTE13
IIS Server: cr5
SQL Server: twin
Database: tpcc
User: sa
Protocol: HTML
w_id Range: 11377 - 12324
w_id Min Warehouse: 1
w_id Max Warehouse: 15168
Scale: Normal
User Count: 9480
District id: 1
Scale Down: No

Driver Engine: RTE14
IIS Server: cr5
SQL Server: twin
Database: tpcc
User: sa
Protocol: HTML
w_id Range: 12325 - 13272
w_id Min Warehouse: 1
w_id Max Warehouse: 15168
Scale: Normal
User Count: 9480
District id: 1
Scale Down: No

Driver Engine: RTE15
IIS Server: cr6
SQL Server: twinb
Database: tpcc
User: sa
Protocol: HTML
w_id Range: 13273 - 14220
w_id Min Warehouse: 1
w_id Max Warehouse: 15168
Scale: Normal
User Count: 9480
District id: 1
Scale Down: No

Driver Engine: RTE16
IIS Server: cr6
SQL Server: twin
Database: tpcc
User: sa
Protocol: HTML
w_id Range: 14221 - 15168
w_id Min Warehouse: 1
w_id Max Warehouse: 15168
Scale: Normal
User Count: 9480
District id: 1
Scale Down: No

Number of Parameter Sets: 66


~Default
Default Parameter Set
                                    Txn     Think
Key     RT      RT      Menu
                                    Weight  Time
Time    Delay   Fence   Delay
                New Order         10.00
12.05       18.01      0.10      5.00      0.10
                Payment           10.00
12.05        3.01      0.10      5.00      0.10
                Delivery           1.00
5.05         2.01      0.10      5.00      0.10
                Stock Level        1.00
5.05         2.01      0.10     20.00      0.10
```


© 2005 Hewlett-Packard Company. All rights reserved.

```
                    Order Status       1.00
10.05        2.01      0.10      5.00      0.10

                    Tuned Distribution

                                      Txn     Think
Key     RT      RT      Menu
                                     Weight  Time
Time    Delay   Fence   Delay
                    New Order         44.75
12.05       18.01      0.10      5.00      0.10
                    Payment           43.10
12.05        3.01      0.10      5.00      0.10
                    Delivery           4.05
5.05         2.01      0.10      5.00      0.10
                    Stock Level        4.05
5.05         2.01      0.10     20.00      0.10
                    Order Status       4.05
10.05        2.01      0.10      5.00      0.10

                    No Think

                                      Txn     Think
Key     RT      RT      Menu
                                     Weight  Time
Time    Delay   Fence   Delay
                    New Order         10.00
0.00         0.00      0.00      5.00      0.00
                    Payment           10.00
0.00         0.00      0.00      5.00      0.00
                    Delivery           1.00
0.00         0.00      0.00      5.00      0.00
                    Stock Level        1.00
0.00         0.00      0.00     20.00      0.00
                    Order Status       1.00
0.00         0.00      0.00      5.00      0.00

                    95%

                                      Txn     Think
Key     RT      RT      Menu
                                     Weight  Time
Time    Delay   Fence   Delay
                    New Order         44.75
13.00       18.01      0.10      5.00      0.10
                    Payment           43.10
13.00        3.01      0.10      5.00      0.10
                    Delivery           4.05
6.00         2.01      0.10      5.00      0.10
                    Stock Level        4.05
6.00         2.01      0.10     20.00      0.10
                    Order Status       4.05
11.00        2.01      0.10      5.00      0.10

                    90%

                                      Txn     Think
Key     RT      RT      Menu
                                     Weight  Time
Time    Delay   Fence   Delay
                    New Order         44.83
16.00       18.01      0.10      5.00      0.10
                    Payment           43.05
16.00        3.01      0.10      5.00      0.10
                    Delivery           4.04
9.00         2.01      0.10      5.00      0.10
                    Stock Level        4.04
9.00         2.01      0.10     20.00      0.10
                    Order Status       4.04
14.00        2.01      0.10      5.00      0.10

                    3.0

                                      Txn     Think
Key     RT      RT      Menu
                                     Weight  Time
Time    Delay   Fence   Delay
                    New Order         44.75
36.15        0.00      0.10      5.00      0.10
                    Payment           43.10
36.15        0.00      0.10      5.00      0.10
                    Delivery           4.05
15.15        0.00      0.10      5.00      0.10
                    Stock Level        4.05
15.15        0.00      0.10     20.00      0.10
                    Order Status       4.05
30.15        0.00      0.10      5.00      0.10

                    4.0
                    4.0 tt
                                      Txn     Think
Key     RT      RT      Menu
                                     Weight  Time
Time    Delay   Fence   Delay
                    New Order         44.75
48.20       18.01      0.10      5.00      0.10
                    Payment           43.10
48.20        3.01      0.10      5.00      0.10
                    Delivery           4.05
20.20        2.01      0.10      5.00      0.10
                    Stock Level        4.05
20.20        2.01      0.10     20.00      0.10
                    Order Status       4.05
40.20        2.01      0.10      5.00      0.10

                    3.8
                    3.8 tt
                                      Txn     Think
Key     RT      RT      Menu
                                     Weight  Time
Time    Delay   Fence   Delay
                    New Order         44.75
45.70       18.01      0.10      5.00      0.10
                    Payment           43.10
45.70        3.01      0.10      5.00      0.10
                    Delivery           4.05
19.10        2.01      0.10      5.00      0.10
                    Stock Level        4.05
19.10        2.01      0.10     20.00      0.10
                    Order Status       4.05
38.10        2.01      0.10      5.00      0.10

                    3.6
                    3.6 tt
                                      Txn     Think
Key     RT      RT      Menu
                                     Weight  Time
Time    Delay   Fence   Delay
                    New Order         44.75
43.30       18.01      0.10      5.00      0.10
                    Payment           43.10
43.30        3.01      0.10      5.00      0.10
                    Delivery           4.05
18.10        2.01      0.10      5.00      0.10
                    Stock Level        4.05
18.10        2.01      0.10     20.00      0.10
                    Order Status       4.05
36.18        2.01      0.10      5.00      0.10

                    3.4
                    3.4 tt
                                      Txn     Think
Key     RT      RT      Menu
                                     Weight  Time
Time    Delay   Fence   Delay
                    New Order         44.75
40.90       18.01      0.10      5.00      0.10
                    Payment           43.10
40.90        3.01      0.10      5.00      0.10
                    Delivery           4.05
17.10        2.01      0.10      5.00      0.10
                    Stock Level        4.05
17.10        2.01      0.10     20.00      0.10
                    Order Status       4.05
17.10        2.01      0.10      5.00      0.10

                    3.2
                    3.2 tt
                                      Txn     Think
Key     RT      RT      Menu
                                     Weight  Time
Time    Delay   Fence   Delay
                    New Order         44.75
38.50       18.01      0.10      5.00      0.10
                    Payment           43.10
38.50        3.01      0.10      5.00      0.10
                    Delivery           4.05
16.10        2.01      0.10      5.00      0.10
                    Stock Level        4.05
16.10        2.01      0.10     20.00      0.10
                    Order Status       4.05
32.10        2.01      0.10      5.00      0.10

                    2.8
                    2.8 tt
                                      Txn     Think
Key     RT      RT      Menu
                                     Weight  Time
Time    Delay   Fence   Delay
                    New Order         44.75
33.74       18.01      0.10      5.00      0.10
                    Payment           43.10
33.74        3.01      0.10      5.00      0.10
                    Delivery           4.05
14.14        2.01      0.10      5.00      0.10
                    Stock Level        4.05
14.14        2.01      0.10     20.00      0.10
```


© 2005 Hewlett-Packard Company. All rights reserved.

```
                    Order Status       4.05
28.14        2.01      0.10      5.00      0.10

                    2.6
                    2.6 tt
                                      Txn     Think
Key     RT      RT      Menu
                                     Weight  Time
Time    Delay   Fence   Delay
                    New Order         44.75
31.30       18.01      0.10      5.00      0.10
                    Payment           43.10
31.30        3.01      0.10      5.00      0.10
                    Delivery           4.05
13.10        2.01      0.10      5.00      0.10
                    Stock Level        4.05
13.10        2.01      0.10     20.00      0.10
                    Order Status       4.05
26.10        2.01      0.10      5.00      0.10

                    2.4
                    2.4 tt
                                      Txn     Think
Key     RT      RT      Menu
                                     Weight  Time
Time    Delay   Fence   Delay
                    New Order         44.75
28.90       18.01      0.10      5.00      0.10
                    Payment           43.10
28.90        3.01      0.10      5.00      0.10
                    Delivery           4.05
12.10        2.01      0.10      5.00      0.10
                    Stock Level        4.05
12.10        2.01      0.10     20.00      0.10
                    Order Status       4.05
24.10        2.01      0.10      5.00      0.10

                    2.2
                    2.2 tt
                                      Txn     Think
Key     RT      RT      Menu
                                     Weight  Time
Time    Delay   Fence   Delay
                    New Order         44.75
28.90       18.01      0.10      5.00      0.10
                    Payment           43.10
28.90        3.01      0.10      5.00      0.10
                    Delivery           4.05
12.10        2.01      0.10      5.00      0.10
                    Stock Level        4.05
12.10        2.01      0.10     20.00      0.10
                    Order Status       4.05
24.12        2.01      0.10      5.00      0.10

                    2.0
                    2.0 tt
                                      Txn     Think
Key     RT      RT      Menu
                                     Weight  Time
Time    Delay   Fence   Delay
                    New Order         44.75
24.10       18.01      0.10      5.00      0.10
                    Payment           43.10
24.10        3.01      0.10      5.00      0.10
                    Delivery           4.05
10.10        2.01      0.10      5.00      0.10
                    Stock Level        4.05
10.10        2.01      0.10     20.00      0.10
                    Order Status       4.05
20.10        2.01      0.10      5.00      0.10

                    5.0
                    5.0 tt
                                      Txn     Think
Key     RT      RT      Menu
                                     Weight  Time
Time    Delay   Fence   Delay
                    New Order         44.75
60.25       18.01      0.10      5.00      0.10
                    Payment           43.10
60.25        3.01      0.10      5.00      0.10
                    Delivery           4.05
25.25        2.01      0.10      5.00      0.10
                    Stock Level        4.05
25.25        2.01      0.10     20.00      0.10
                    Order Status       4.05
50.25        2.01      0.10      5.00      0.10

                    4.5
                    4.5 tt
                                      Txn     Think
Key     RT      RT      Menu
                                     Weight  Time
Time    Delay   Fence   Delay
                    New Order         44.75
54.20       18.01      0.10      5.00      0.10
                    Payment           43.10
54.20        3.01      0.10      5.00      0.10
                    Delivery           4.05
22.70        2.01      0.10      5.00      0.10
                    Stock Level        4.05
22.70        2.01      0.10     20.00      0.10
                    Order Status       4.05
45.20        2.01      0.10      5.00      0.10

                    3.5
                    3.5 tt
                                      Txn     Think
Key     RT      RT      Menu
                                     Weight  Time
Time    Delay   Fence   Delay
                    New Order         44.75
42.10       18.01      0.10      5.00      0.10
                    Payment           43.10
42.10        3.01      0.10      5.00      0.10
                    Delivery           4.05
17.60        2.01      0.10      5.00      0.10
                    Stock Level        4.05
17.60        2.01      0.10     20.00      0.10
                    Order Status       4.05
35.10        2.01      0.10      5.00      0.10

                    1.8
                    1.8 tt
                                      Txn     Think
Key     RT      RT      Menu
                                     Weight  Time
Time    Delay   Fence   Delay
                    New Order         44.75
21.60       18.01      0.10      5.00      0.10
                    Payment           43.10
21.60        3.01      0.10      5.00      0.10
                    Delivery           4.05
9.09         2.01      0.10      5.00      0.10
                    Stock Level        4.05
9.09         2.01      0.10     20.00      0.10
                    Order Status       4.05
18.09        2.01      0.10      5.00      0.10

                    4.2
                    4.2 tt
                                      Txn     Think
Key     RT      RT      Menu
                                     Weight  Time
Time    Delay   Fence   Delay
                    New Order         44.75
54.20       18.01      0.10      5.00      0.10
                    Payment           43.10
54.20        3.01      0.10      5.00      0.10
                    Delivery           4.05
22.70        2.01      0.10      5.00      0.10
                    Stock Level        4.05
22.70        2.01      0.10     20.00      0.10
                    Order Status       4.05
45.20        2.01      0.10      5.00      0.10

                    1.6
                    1.6 tt
                                      Txn     Think
Key     RT      RT      Menu
                                     Weight  Time
Time    Delay   Fence   Delay
                    New Order         44.75
19.20       18.01      0.10      5.00      0.10
                    Payment           43.10
19.20        3.01      0.10      5.00      0.10
                    Delivery           4.05
8.08         2.01      0.10      5.00      0.10
                    Stock Level        4.05
8.08         2.01      0.10     20.00      0.10
                    Order Status       4.05
16.08        2.01      0.10      5.00      0.10

                    1.4
                    1.4 tt
                                      Txn     Think
Key     RT      RT      Menu
                                     Weight  Time
Time    Delay   Fence   Delay
                    New Order         44.75
16.87       18.01      0.10      5.00      0.10
                    Payment           43.10
16.87        3.01      0.10      5.00      0.10
                    Delivery           4.05
7.07         2.01      0.10      5.00      0.10
                    Stock Level        4.05
7.07         2.01      0.10     20.00      0.10
```


© 2005 Hewlett-Packard Company. All rights reserved.

```
                    Order Status       4.05
14.07        2.01      0.10      5.00      0.10

                    1.2
                    1.2 tt
                                      Txn     Think
Key     RT      RT      Menu
                                     Weight  Time
Time    Delay   Fence   Delay
                    New Order         44.83
14.46       18.01      0.10      5.00      0.10
                    Payment           43.05
14.46        3.01      0.10      5.00      0.10
                    Delivery           4.04
6.06         2.01      0.10      5.00      0.10
                    Stock Level        4.04
6.06         2.01      0.10     20.00      0.10
                    Order Status       4.04
12.06        2.01      0.10      5.00      0.10

                    3.5
                    3.5 tt
                                      Txn     Think
Key     RT      RT      Menu
                                     Weight  Time
Time    Delay   Fence   Delay
                    New Order         44.75
42.10       18.01      0.10      5.00      0.10
                    Payment           43.10
42.10        3.01      0.10      5.00      0.10
                    Delivery           4.05
17.60        2.01      0.10      5.00      0.10
                    Stock Level        4.05
17.60        2.01      0.10     20.00      0.10
                    Order Status       4.05
35.10        2.01      0.10      5.00      0.10

                    1.9
                    1.9 tt
                                      Txn     Think
Key     RT      RT      Menu
                                     Weight  Time
Time    Delay   Fence   Delay
                    New Order         44.75
22.89       18.01      0.10      5.00      0.10
                    Payment           43.10
22.89        3.01      0.10      5.00      0.10
                    Delivery           4.05
9.59         2.01      0.10      5.00      0.10
                    Stock Level        4.05
9.59         2.01      0.10     20.00      0.10
                    Order Status       4.05
19.09        2.01      0.10      5.00      0.10

                    1.1
                    1.1 tt
                                      Txn     Think
Key     RT      RT      Menu
                                     Weight  Time
Time    Delay   Fence   Delay
                    New Order         44.83
13.25       18.01      0.10      5.00      0.10
```

```
                    Payment           43.05
13.25        3.01      0.10      5.00      0.10
                    Delivery           4.04
5.55         2.01      0.10      5.00      0.10
                    Stock Level        4.04
5.55         2.01      0.10     20.00      0.10
                    Order Status       4.04
11.05        2.01      0.10      5.00      0.10

                    1.05 better
                    1.05 tt better
                                      Txn     Think
Key     RT      RT      Menu
                                     Weight  Time
Time    Delay   Fence   Delay
                    New Order         44.92
12.65       18.01      0.10      5.00      0.10
                    Payment           43.01
12.65        3.01      0.10      5.00      0.10
                    Delivery           4.02
5.30         2.01      0.10      5.00      0.10
                    Stock Level        4.03
5.30         2.01      0.10     20.00      0.10
                    Order Status       4.02
10.55        2.01      0.10      5.00      0.10

                    1.09
                    1.09 tt
                                      Txn     Think
Key     RT      RT      Menu
                                     Weight  Time
Time    Delay   Fence   Delay
                    New Order         44.83
13.13       18.01      0.10      5.00      0.10
                    Payment           43.05
13.13        3.01      0.10      5.00      0.10
                    Delivery           4.04
5.50         2.01      0.10      5.00      0.10
                    Stock Level        4.04
5.50         2.01      0.10     20.00      0.10
                    Order Status       4.04
10.95        2.01      0.10      5.00      0.10

                    1.08
                    1.08 tt
                                      Txn     Think
Key     RT      RT      Menu
                                     Weight  Time
Time    Delay   Fence   Delay
                    New Order         44.83
13.01       18.01      0.10      5.00      0.10
                    Payment           43.05
13.01        3.01      0.10      5.00      0.10
                    Delivery           4.04
5.45         2.01      0.10      5.00      0.10
                    Stock Level        4.04
5.45         2.01      0.10     20.00      0.10
                    Order Status       4.04
10.85        2.01      0.10      5.00      0.10

                    1.07
                    1.07 tt
```

```
                                      Txn     Think
Key     RT      RT      Menu
                                     Weight  Time
Time    Delay   Fence   Delay
                    New Order         44.83
12.89       18.01      0.10      5.00      0.10
                    Payment           43.05
12.89        3.01      0.10      5.00      0.10
                    Delivery           4.04
5.40         2.01      0.10      5.00      0.10
                    Stock Level        4.04
5.40         2.01      0.10     20.00      0.10
                    Order Status       4.04
10.75        2.01      0.10      5.00      0.10

                    1.06
                    1.06 tt
                                      Txn     Think
Key     RT      RT      Menu
                                     Weight  Time
Time    Delay   Fence   Delay
                    New Order         44.83
12.77       18.01      0.10      5.00      0.10
                    Payment           43.05
12.77        3.01      0.10      5.00      0.10
                    Delivery           4.04
5.35         2.01      0.10      5.00      0.10
                    Stock Level        4.04
5.35         2.01      0.10     20.00      0.10
                    Order Status       4.04
10.65        2.01      0.10      5.00      0.10

                    1.15
                    1.15 tt
                                      Txn     Think
Key     RT      RT      Menu
                                     Weight  Time
Time    Delay   Fence   Delay
                    New Order         44.75
13.85       18.01      0.10      5.00      0.10
                    Payment           43.10
13.85        3.01      0.10      5.00      0.10
                    Delivery           4.05
5.80         2.01      0.10      5.00      0.10
                    Stock Level        4.05
5.80         2.01      0.10     20.00      0.10
                    Order Status       4.05
11.55        2.01      0.10      5.00      0.10

                    1.25
                    1.25 tt
                                      Txn     Think
Key     RT      RT      Menu
                                     Weight  Time
Time    Delay   Fence   Delay
                    New Order         44.83
15.06       18.01      0.10      5.00      0.10
                    Payment           43.05
15.06        3.01      0.10      5.00      0.10
                    Delivery           4.04
6.31         2.01      0.10      5.00      0.10
                    Stock Level        4.04
6.31         2.01      0.10     20.00      0.10
```


© 2005 Hewlett-Packard Company. All rights reserved.

```
                    Order Status       4.04
12.56        2.01      0.10      5.00      0.10

                    1.3
                    1.3 tt
                                      Txn     Think
Key     RT      RT      Menu
                                     Weight  Time
Time    Delay   Fence   Delay
                    New Order         44.83
15.66       18.01      0.10      5.00      0.10
                    Payment           43.05
15.66        3.01      0.10      5.00      0.10
                    Delivery           4.04
6.56         2.01      0.10      5.00      0.10
                    Stock Level        4.04
6.56         2.01      0.10     20.00      0.10
                    Order Status       4.04
13.06        2.01      0.10      5.00      0.10

                    1.12
                    1.12 tt
                                      Txn     Think
Key     RT      RT      Menu
                                     Weight  Time
Time    Delay   Fence   Delay
                    New Order         44.75
13.49       18.01      0.10      5.00      0.10
                    Payment           43.10
13.49        3.01      0.10      5.00      0.10
                    Delivery           4.05
5.65         2.01      0.10      5.00      0.10
                    Stock Level        4.05
5.65         2.01      0.10     20.00      0.10
                    Order Status       4.05
11.25        2.01      0.10      5.00      0.10

                    1.18
                    1.18 tt
                                      Txn     Think
Key     RT      RT      Menu
                                     Weight  Time
Time    Delay   Fence   Delay
                    New Order         44.75
14.21       18.01      0.10      5.00      0.10
                    Payment           43.10
14.21        3.01      0.10      5.00      0.10
                    Delivery           4.05
5.95         2.01      0.10      5.00      0.10
                    Stock Level        4.05
5.95         2.01      0.10     20.00      0.10
                    Order Status       4.05
11.85        2.01      0.10      5.00      0.10

                    1.22
                    1.22 tt
                                      Txn     Think
Key     RT      RT      Menu
                                     Weight  Time
Time    Delay   Fence   Delay
                    New Order         44.75
14.70       18.01      0.10      5.00      0.10
```

```
                    Payment           43.10
14.70        3.01      0.10      5.00      0.10
                    Delivery           4.05
6.16         2.01      0.10      5.00      0.10
                    Stock Level        4.05
6.16         2.01      0.10     20.00      0.10
                    Order Status       4.05
12.26        2.01      0.10      5.00      0.10

                    1.28
                    1.28 tt
                                      Txn     Think
Key     RT      RT      Menu
                                     Weight  Time
Time    Delay   Fence   Delay
                    New Order         44.75
15.42       18.01      0.10      5.00      0.10
                    Payment           43.10
15.42        3.01      0.10      5.00      0.10
                    Delivery           4.05
6.46         2.01      0.10      5.00      0.10
                    Stock Level        4.05
6.46         2.01      0.10     20.00      0.10
                    Order Status       4.05
12.86        2.01      0.10      5.00      0.10

                    1.04
                    1.04 tt
                                      Txn     Think
Key     RT      RT      Menu
                                     Weight  Time
Time    Delay   Fence   Delay
                    New Order         44.83
12.53       18.01      0.10      5.00      0.10
                    Payment           43.05
12.53        3.01      0.10      5.00      0.10
                    Delivery           4.04
5.25         2.01      0.10      5.00      0.10
                    Stock Level        4.04
5.25         2.01      0.10     20.00      0.10
                    Order Status       4.04
10.45        2.01      0.10      5.00      0.10

                    1.03
                    1.03 tt
                                      Txn     Think
Key     RT      RT      Menu
                                     Weight  Time
Time    Delay   Fence   Delay
                    New Order         44.83
12.41       18.01      0.10      5.00      0.10
                    Payment           43.05
12.41        3.01      0.10      5.00      0.10
                    Delivery           4.04
5.20         2.01      0.10      5.00      0.10
                    Stock Level        4.04
5.20         2.01      0.10     20.00      0.10
                    Order Status       4.04
10.35        2.01      0.10      5.00      0.10

                    1.02
                    1.02 tt
```

```
                                      Txn     Think
Key     RT      RT      Menu
                                     Weight  Time
Time    Delay   Fence   Delay
                    New Order         44.83
12.29       18.01      0.10      5.00      0.10
                    Payment           43.05
12.29        3.01      0.10      5.00      0.10
                    Delivery           4.04
5.15         2.01      0.10      5.00      0.10
                    Stock Level        4.04
5.15         2.01      0.10     20.00      0.10
                    Order Status       4.04
10.25        2.01      0.10      5.00      0.10

                    1.01
                    1.01 tt
                                      Txn     Think
Key     RT      RT      Menu
                                     Weight  Time
Time    Delay   Fence   Delay
                    New Order         44.83
12.17       18.01      0.10      5.00      0.10
                    Payment           43.05
12.17        3.01      0.10      5.00      0.10
                    Delivery           4.04
5.10         2.01      0.10      5.00      0.10
                    Stock Level        4.04
5.10         2.01      0.10     20.00      0.10
                    Order Status       4.04
10.15        2.01      0.10      5.00      0.10

                    1.005_best
                    1.005 tt best
                                      Txn     Think
Key     RT      RT      Menu
                                     Weight  Time
Time    Delay   Fence   Delay
                    New Order         44.88
12.11       18.01      0.10      5.00      0.10
                    Payment           43.02
12.11        3.01      0.10      5.00      0.10
                    Delivery           4.03
5.07         2.01      0.10      5.00      0.10
                    Stock Level        4.03
5.07         2.01      0.10     20.00      0.10
                    Order Status       4.03
10.10        2.01      0.10      5.00      0.10

                    1.001_best
                    1.001 tt best
                                      Txn     Think
Key     RT      RT      Menu
                                     Weight  Time
Time    Delay   Fence   Delay
                    New Order         44.91
12.06       18.01      0.10      5.00      0.10
                    Payment           43.04
12.06        3.01      0.10      5.00      0.10
                    Delivery           4.01
5.06         2.01      0.10      5.00      0.10
                    Stock Level        4.02
5.06         2.01      0.10     20.00      0.10
```


© 2005 Hewlett-Packard Company. All rights reserved.

```
                    Order Status       4.02
10.06        2.01      0.10      5.00      0.10

                    1.03 better
                    1.03 tt more aggressive
                                      Txn     Think
Key     RT      RT      Menu
                                    Weight  Time
Time    Delay   Fence   Delay
                    New Order         44.92
12.41       18.01      0.10      5.00      0.10
                    Payment           43.01
12.41        3.01      0.10      5.00      0.10
                    Delivery           4.02
5.20         2.01      0.10      5.00      0.10
                    Stock Level        4.03
5.20         2.01      0.10     20.00      0.10
                    Order Status       4.02
10.35        2.01      0.10      5.00      0.10

                    1.005 better
                    1.005 tt more aggressive
                                      Txn     Think
Key     RT      RT      Menu
                                    Weight  Time
Time    Delay   Fence   Delay
                    New Order         44.90
12.11       18.01      0.10      5.00      0.10
                    Payment           43.05
12.11        3.01      0.10      5.00      0.10
                    Delivery           4.01
5.07         2.01      0.10      5.00      0.10
                    Stock Level        4.03
5.07         2.01      0.10     20.00      0.10
                    Order Status       4.01
10.10        2.01      0.10      5.00      0.10

                    1.02 better
                    1.02 tt more aggressive
                                      Txn     Think
Key     RT      RT      Menu
                                    Weight  Time
Time    Delay   Fence   Delay
                    New Order         44.92
12.29       18.01      0.10      5.00      0.10
                    Payment           43.01
12.29        3.01      0.10      5.00      0.10
                    Delivery           4.02
5.15         2.01      0.10      5.00      0.10
                    Stock Level        4.03
5.15         2.01      0.10     20.00      0.10
                    Order Status       4.02
10.25        2.01      0.10      5.00      0.10

                    1.01 best
                    1.01 tt best
                                      Txn     Think
Key     RT      RT      Menu
                                    Weight  Time
Time    Delay   Fence   Delay
                    New Order         44.90
12.17       18.01      0.10      5.00      0.10
```

```
                    Payment           43.05
12.17        3.01      0.10      5.00      0.10
                    Delivery           4.01
5.10         2.01      0.10      5.00      0.10
                    Stock Level        4.03
5.10         2.01      0.10     20.00      0.10
                    Order Status       4.01
10.15        2.01      0.10      5.00      0.10

                    1.02 best
                    1.02 tt best
                                      Txn     Think
Key     RT      RT      Menu
                                    Weight  Time
Time    Delay   Fence   Delay
                    New Order         44.96
12.29       18.01      0.00      5.00      0.00
                    Payment           43.00
12.29        3.01      0.00      5.00      0.00
                    Delivery           4.00
5.15         2.01      0.00      5.00      0.00
                    Stock Level        4.03
5.15         2.01      0.00     20.00      0.00
                    Order Status       4.01
10.25        2.01      0.00      5.00      0.00

                    1.03 best
                    1.03 tt best
                                      Txn     Think
Key     RT      RT      Menu
                                    Weight  Time
Time    Delay   Fence   Delay
                    New Order         44.96
12.41       18.01      0.10      5.00      0.10
                    Payment           43.01
12.41        3.01      0.10      5.00      0.10
                    Delivery           4.01
5.20         2.01      0.10      5.00      0.10
                    Stock Level        4.01
5.20         2.01      0.10     20.00      0.10
                    Order Status       4.01
10.35        2.01      0.10      5.00      0.10

                    5.5
                    5.5 tt
                                      Txn     Think
Key     RT      RT      Menu
                                    Weight  Time
Time    Delay   Fence   Delay
                    New Order         44.83
66.28       18.01      0.10      5.00      0.10
                    Payment           43.05
66.28        3.01      0.10      5.00      0.10
                    Delivery           4.04
27.77        2.01      0.10      5.00      0.10
                    Stock Level        4.04
27.77        2.01      0.10     20.00      0.10
                    Order Status       4.04
55.27        2.01      0.10      5.00      0.10

                    6.0
                    6.0 tt
```

```
                                      Txn     Think
Key     RT      RT      Menu
                                    Weight  Time
Time    Delay   Fence   Delay
                    New Order         44.83
72.30       18.01      0.10      5.00      0.10
                    Payment           43.05
72.30        3.01      0.10      5.00      0.10
                    Delivery           4.04
30.30        2.01      0.10      5.00      0.10
                    Stock Level        4.04
30.30        2.01      0.10     20.00      0.10
                    Order Status       4.04
60.30        2.01      0.10      5.00      0.10

                    6.5
                    6.5 tt
                                      Txn     Think
Key     RT      RT      Menu
                                    Weight  Time
Time    Delay   Fence   Delay
                    New Order         44.83
79.53       18.01      0.10      5.00      0.10
                    Payment           43.05
79.53        3.01      0.10      5.00      0.10
                    Delivery           4.04
33.33        2.01      0.10      5.00      0.10
                    Stock Level        4.04
33.33        2.01      0.10     20.00      0.10
                    Order Status       4.04
66.33        2.01      0.10      5.00      0.10

                    7.0
                    7.0 tt
                                      Txn     Think
Key     RT      RT      Menu
                                    Weight  Time
Time    Delay   Fence   Delay
                    New Order         44.83
84.35       18.01      0.10      5.00      0.10
                    Payment           43.05
84.35        3.01      0.10      5.00      0.10
                    Delivery           4.04
35.35        2.01      0.10      5.00      0.10
                    Stock Level        4.04
35.35        2.01      0.10     20.00      0.10
                    Order Status       4.04
70.35        2.01      0.10      5.00      0.10

                    7.5
                    7.5 tt
                                      Txn     Think
Key     RT      RT      Menu
                                    Weight  Time
Time    Delay   Fence   Delay
                    New Order         44.83
90.38       18.01      0.10      5.00      0.10
                    Payment           43.05
90.38        3.01      0.10      5.00      0.10
                    Delivery           4.04
37.88        2.01      0.10      5.00      0.10
                    Stock Level        4.04
37.88        2.01      0.10     20.00      0.10
```


© 2005 Hewlett-Packard Company. All rights reserved.

```
                    Order Status       4.04
75.38        2.01      0.10      5.00      0.10

                    8.0
                    8.0 tt
                                      Txn     Think
Key     RT      RT      Menu
                                     Weight  Time
Time    Delay   Fence   Delay
                    New Order         44.83
96.40       18.01      0.10      5.00      0.10
                    Payment           43.05
96.40        3.01      0.10      5.00      0.10
                    Delivery           4.04
40.40        2.01      0.10      5.00      0.10
                    Stock Level        4.04
40.40        2.01      0.10     20.00      0.10
                    Order Status       4.04
80.40        2.01      0.10      5.00      0.10

                    8.5
                    8.5 tt
                                      Txn     Think
Key     RT      RT      Menu
                                     Weight  Time
Time    Delay   Fence   Delay
                    New Order         44.83
102.43      18.01      0.10      5.00      0.10
                    Payment           43.05
192.43       3.01      0.10      5.00      0.10
                    Delivery           4.04
42.92        2.01      0.10      5.00      0.10
                    Stock Level        4.04
42.92        2.01      0.10     20.00      0.10
                    Order Status       4.04
85.42        2.01      0.10      5.00      0.10

                    9.0
                    9.0 tt
                                      Txn     Think
Key     RT      RT      Menu
                                     Weight  Time
Time    Delay   Fence   Delay
                    New Order         44.83
108.45      18.01      0.10      5.00      0.10
                    Payment           43.05
108.45       3.01      0.10      5.00      0.10
                    Delivery           4.04
45.45        2.01      0.10      5.00      0.10
                    Stock Level        4.04
45.45        2.01      0.10     20.00      0.10
                    Order Status       4.04
90.45        2.01      0.10      5.00      0.10

                    9.5
                    9.5 tt
                                      Txn     Think
Key     RT      RT      Menu
                                     Weight  Time
Time    Delay   Fence   Delay
                    New Order         44.83
114.47      18.01      0.10      5.00      0.10
                    Payment           43.05
114.47       3.01      0.10      5.00      0.10
                    Delivery           4.04
47.98        2.01      0.10      5.00      0.10
                    Stock Level        4.04
47.98        2.01      0.10     20.00      0.10
                    Order Status       4.04
95.47        2.01      0.10      5.00      0.10

                    10
                    10 tt
                                      Txn     Think
Key     RT      RT      Menu
                                     Weight  Time
Time    Delay   Fence   Delay
                    New Order         44.83
120.50      18.01      0.10      5.00      0.10
                    Payment           43.05
120.50       3.01      0.10      5.00      0.10
                    Delivery           4.04
50.50        2.01      0.10      5.00      0.10
                    Stock Level        4.04
50.50        2.01      0.10     20.00      0.10
                    Order Status       4.04
100.50       2.01      0.10      5.00      0.10

                    1.02 better
                    1.02 more agressive
                                      Txn     Think
Key     RT      RT      Menu
                                     Weight  Time
Time    Delay   Fence   Delay
                    New Order         44.92
12.05       18.01      0.10      5.00      0.10
                    Payment           43.01
12.05        3.01      0.10      5.00      0.10
                    Delivery           4.02
5.05         2.01      0.10      5.00      0.10
                    Stock Level        4.03
5.05         2.01      0.10     20.00      0.10
                    Order Status       4.02
10.05        2.01      0.10      5.00      0.10

                    1.01 better
                    1.01 more aggressive
                                      Txn     Think
Key     RT      RT      Menu
                                     Weight  Time
Time    Delay   Fence   Delay
                    New Order         44.92
12.17       18.01      0.10      5.00      0.10
                    Payment           43.01
12.17        3.01      0.10      5.00      0.10
                    Delivery           4.02
5.10         2.01      0.10      5.00      0.10
                    Stock Level        4.03
5.10         2.01      0.10     20.00      0.10
                    Order Status       4.02
10.15        2.01      0.10      5.00      0.10

                    1.001 better
                    1.001 more aggressive
                                      Txn     Think
Key     RT      RT      Menu
                                     Weight  Time
Time    Delay   Fence   Delay
                    New Order         44.92
12.06       18.01      0.10      5.00      0.10
                    Payment           43.01
12.06        3.01      0.10      5.00      0.10
                    Delivery           4.02
5.06         2.01      0.10      5.00      0.10
                    Stock Level        4.03
5.06         2.01      0.10     20.00      0.10
                    Order Status       4.02
10.06        2.01      0.10      5.00      0.10

                    FullSpeed
                    1.000 tt
                                      Txn     Think
Key     RT      RT      Menu
                                     Weight  Time
Time    Delay   Fence   Delay
                    New Order         44.92
12.05       18.01      0.10      5.00      0.10
                    Payment           43.01
12.05        3.01      0.10      5.00      0.10
                    Delivery           4.02
5.05         2.01      0.10      5.00      0.10
                    Stock Level        4.03
5.05         2.01      0.10     20.00      0.10
                    Order Status       4.02
10.05        2.01      0.10      5.00      0.10

                    1.003 best
                    1.003 best
                                      Txn     Think
Key     RT      RT      Menu
                                     Weight  Time
Time    Delay   Fence   Delay
                    New Order         44.90
12.09       18.01      0.10      5.00      0.10
                    Payment           43.05
12.09        3.01      0.10      5.00      0.10
                    Delivery           4.01
5.07         2.01      0.10      5.00      0.10
                    Stock Level        4.03
5.07         2.01      0.10     20.00      0.10
                    Order Status       4.01
10.08        2.01      0.10      5.00      0.10
```


© 2005 Hewlett-Packard Company. All rights reserved.

HP Specific Drivers

The following Microsoft Windows 2003 Server device drivers were replaced with HP-specific device drivers:
The Microsoft SMART-6404 Array Controller default device driver (CPQCISSM.SYS) was replaced with the HP SMART-6404 Array Controller Non-miniport Performance Drivers for Microsoft Windows 2003 Server (hpqcissb.sys and hpqcissd.sys).

© 2005 Hewlett-Packard Company. All rights reserved.

Appendix D: 60-Day Space

©2005 Hewlett-Packard Company. All rights reserved.

TPC-C 60 Day Space Requirements

Warehouses	15,392				TpmC	187,296.00
Table	Rows	Data KB	Index KB	Extra 5% KB	8hr Space	Total Space KB
Warehouse	15,392	**1,664**	**24**	84		1772
District	153,920	**17,344**	**56**	870		18270
Customer	461,760,000	**335,825,456**	**20,956,656**	17,839,106		374621218
History	461,760,000	**27,567,776**	**64**		5,406,847	27567840
New_order	138,528,000	**2,468,208**	**6,208**	123,721		2598137
Orders	461,760,000	**15,077,880**	**7,355,152**		17,652,596	22433032
Order_line	4,616,989,314	**307,839,256**	**728,424**		64,477,588	308567680
Item	100,000	**9,528**	**40**	478		10046
Stock	1,539,200,000	**492,544,000**	**1,042,488**	24,679,324		518265812
Total		1,181,351,112	30,089,112	42,643,584	87,537,030	1,254,083,808

	MSSQL_misc_fg	MSSQL_cs_fg
Warehouse	1772	
District	18270	
Customer		374621218
History	32974687	
New_order	2598137	
Orders	40085628	
Order_line	373045268	
Item	10046	
Stock		518265812
Total	448,733,808	892,887,030
files=	**2**	**12**
size=	**28,544,000**	**9,856,000**
Total=	57,088,000	118,272,000
8K blocks	456,704,000	946,176,000
	OK	OK

	MB	
Dynamic Space	342,270	Sum of Data for Order, Orderline and History
Static Space	882,421	Sum of Data+Index+5%-Dynamic Space
Free Space	na	Total Allocated Spac - (Dynamic + Static Space)
Daily Growth	66,638	(Dynamic Space/(W*62.5))*tpmc
Daily Spread	-	(Free Space -1.5*Daily Growth) Zero Assumed

60 Day Space MB	4,880,709	
60 Day Space GB	4,766.32	GB
Log Size	457,500.00	MB
KB Per New Order	4.83	KB
8 hr log MB	423,790	MB
8 hr log GB	413.8571	GB

Space Usage	GB Needed	Disks Measured	GB Priced	Disk Size	Formatted Size
60 Day Space DB	4,766.32	392	13296.64	36.4GB	33.920
			0.00		
			0.00		
Total DB			13296.64		
8-hr log + mirror	827.7142	14	949.70	72.8GB	67.84
OS, Swap	3	2	67.84	36.4GB	33.920
Total Storage	5,597.03	GB	14,314.18	GB	

©2005 Hewlett-Packard Company. All rights reserved.

tpmC	187,296.00									
	Data Before KB	Index Before KB	Data After KB	Index After KB	Data Grow KB	Index Grow KB	Total Grow KB	KB/New-Order	8-Hr Growth KB	8-Hr Growth MB
History	27,567,776	64	30,938,032	288	3,370,256	224	3,370,480	0.0601	5,406,846.79	5,280.12
Order	15,077,880	7,355,152	18,791,312	14,645,864	3,713,432	7,290,712	11,004,144	0.1964	17,652,595.67	17,238.86
Order-Line	307,839,256	728,424	347,315,256	1,445,984	39,476,000	717,560	40,193,560	0.7172	64,477,588.03	62,966.39
										85,485.38
	sum(*) Before		sum(*) After		Num New-					
d_next_o_id	461,913,920		517,956,411		56,042,491					
	Before MB		After MB		Grow MB			KB/New-Order	8-Hr Growth MB	8-Hr Growth GB
Log	6054.79		270233.66		264178.87			4.8270	423,789.70	413.86
								4,942.8857	bytes	
457500	1.323451		59.067467							
Database tpcc log used (%)										

©2005 Hewlett-Packard Company. All rights reserved.

Appendix E: Third Party Letters

©2005 Hewlett-Packard Company. All rights reserved.

Microsoft Corporation
One Microsoft Way
Redmond, WA 98052-6399

Tel 425 882 8080
Fax 425 936 7329
http://www.microsoft.com/

Microsoft

April 6, 2005

Hewlett-Packard
Company
David Adams
20555 SH 249
MS 150402
Houston, TK 77040

Mr. Adams:

Here is the information you requested regarding pricing for several Microsoft products to be used in conjunction with your TPC-C benchmark testing.

All pricing shown is in US Dollars ($).

Part Number	Description	Unit Price	Quantity	Price
810-00846	**SQL Server 2000 Enterprise Edition** *Per Processor Licensing* *Discount Schedule: Open Program - Level C* *Unit Price reflects a 17% discount from the retail unit price of $19,999.*	$16,541	4	$66,164
C11-00821	**Windows 2000 Server** *Server License Only - No CALs* *Discount Schedule: No Level* *Unit Price reflects a 8% discount from the retail unit price of $799.*	$738	8	$5,904
P72-00264	**Windows Server 2003, Enterprise Edition** *Server License Only - No CALs* *Discount Schedule: Open Program - No Level* *Unit Price reflects a 40% discount from the retail unit price of $3,999.*	$2,399	1	$2,399
254-00170	**Visual C++ Standard Edition** *Discount Schedule: No Discounts Applied*	$109	1	$109
	Microsoft Problem Resolution Services *Professional Support* *(1 incident)*	$245	1	$245

All products are currently orderable through Microsoft's normal distribution channels.

This quote is valid for the next 90 days.

©2005 Hewlett-Packard Company. All rights reserved.

If we can be of any further assistance, please contact Jamie Reding at (425) 703-0510 or jamiere@microsoft.com.

Reference ID: PCdaad0506044929.
Please include this Reference ID in any correspondence regarding this price quote.

©2005 Hewlett-Packard Company. All rights reserved.