Hewlett-Packard Company

TPC Benchmark™ H
Full Disclosure Report
for
HP ProLiant DL585G1 4P
using
Microsoft SQL Server 2005 x64 Enterprise Edition
and
Windows Server 2003 x64 Enterprise Edition

Third Edition
March 2006

© 2006 Hewlett-Packard Company. All rights reserved.

First Edition – November ,2005
Second Edition – February, 2006
Third Edition – March 2006

Hewlett-Packard Company (HP), the Sponsor of this benchmark test, believes that the information in this document is accurate as of the publication date. The information in this document is subject to change without notice. The Sponsor assumes no responsibility for any errors that may appear in this document.

The pricing information in this document is believed to accurately reflect the current prices as of the publication date. However, the Sponsor provides no warranty of the pricing information in this document.

Benchmark results are highly dependent upon workload, specific application requirements, and system design and implementation. Relative system performance will vary as a result of these and other factors. Therefore, the TPC Benchmark H should not be used as a substitute for a specific customer application benchmark when critical capacity planning and/or product evaluation decisions are contemplated.

All performance data contained in this report was obtained in a rigorously controlled environment. Results obtained in other operating environments may vary significantly. No warranty of system performance or price/performance is expressed or implied in this report.

Copyright 2006 Hewlett-Packard Company.

All rights reserved. Permission is hereby granted to reproduce this document in whole or in part provided the copyright notice printed above is set forth in full text or on the title page of each item reproduced.

NonStop, ProLiant DL585G1, and ProLiant are registered trademarks of Hewlett-Packard Company.

Microsoft, Windows 2003 and SQL Server 2005 are registered trademarks of Microsoft Corporation.

TPC Benchmark, TPC-H, QppH, QthH and QphH are trademarks of the Transaction Processing Performance Council.

All other brand or product names mentioned herein must be considered trademarks or registered trademarks of their respective owners.

© 2006 Hewlett-Packard Company. All rights reserved.

	HP ProLiant DL585G1 4P	TPC-H Rev. 2.3.0
		Report Date: **Nov 4, 2005**
		Revision Date: **Mar 29, 2006**

Total System Cost	Composite Query per Hour Metric	Price / Performance
$96,638 USD	**12,600.3** QphH@100GB	**$7.67 USD** $ / QphH@100GB

Database Size	Database Manager	Operating System	Other Software	Availability Date
100GB	**Microsoft SQL Server 2005 Enterprise Edition**	**Windows Server 2003, Enterprise Edition**	**Visual C++ Visual Basic**	**Nov 7, 2005**

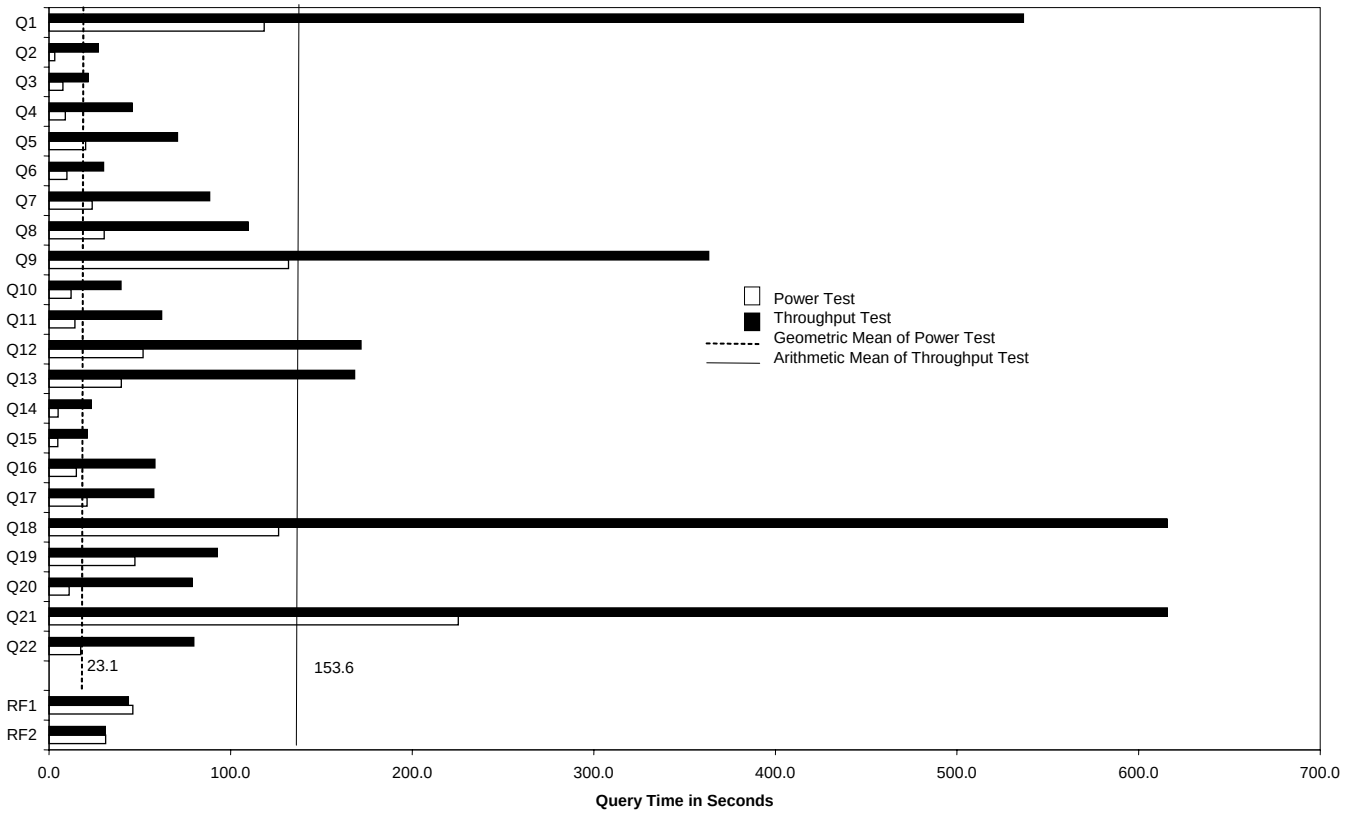

Database Load Time = 1:18:12	Load Included Backup: N	Total Data Storage / Database Size = 30.24

RAID (Base tables only): N	RAID (Base tables and auxiliary data structures): N	RAID (All): N

System Configuration:

Processors/Cores/Threads : 4/8/8 2.4 GHz DC AMD Opteron w/ 1M Cache
Memory : 64 GB memory
Disk Controllers : 8x Smart Array P600
Disks : 80x 36 GB 10K rpm SAS drives (external)
4x 36 GB 15k rpm SCSI drives (internal)
Total Disk Storage: 3024 GB

Note: Database Size includes only raw data (e.g., no temp, index, redundant storage space, etc).

	HP ProLiant DL585 2.4GHz 4P DC	TPC-H Rev. 2.3.0 Report Date: 4-Nov-05 Revision Date: 29-Mar-06

Description	Part Number	Third Party Brand	Pricing	Unit Price	Qty	Extended Price	3 yr. Maint. Price
Server Hardware							
ProLiant DL585 R01 O2.4GHz (1 MB) x 2	397841-001		1	10,399	1	10,399	
- 2 GB PC2700 DDR, Integrated Smart Array Controller 5i,							
- Embedded NC7782 Dual Port PCI-X 10/100/1000T Gigabit NIC							
HP DC 2.4/1000 PC2700 DL585 Opt Kit	397843-B21		1	3,699	2	7,398	
HP 4GB Reg PC2700 2x2GB Memory	371049-B21		1	1,499	16	23,984	
HP s7540 17in CRT Monitor	PF997AA#ABA		1	139	1	139	
HP PS/2 Scroll Mouse Carbonite	DG169AV		1	5	1	5	
PS/2 Standard Keyboard	DG170AV#ABA		1	10	1	10	
HP 5642 Unassembled Rack	358254-B21		1	689	1	689	
3YR 24X7 4HR 500 SERIES SVR	U4608E		1	1,575	1		1,575
					Subtotal	**42,624**	**1,575**
Storage							
HP SMART Array P600 3G SAS/SATA RAID Controller	337972-B21		1	799	8	6,392	
HP StorageWorks MSA50 Disk Enclosure	364430-B21		1	1,899	8	15,192	
HP 36GB 15K U320 Pluggable Hard Drive (internal)	286776-B22		1	269	4	1,076	
HP 36GB 10K SAS Single Port SFF Hard Drive	375859-B21		1	299	80	23,920	
HP 36GB 10K SAS Single Port SFF Hard Drive (10% spare)	375859-B21		1	299	8	2,392	
HP StorageWorks MSA50 Disk Enclosure (10% spare)	364430-B21		1	1,899	2		3,798
					Subtotal	**48,972**	**3,798**
Hardware and Maintence Discount							
Large Purchase and Net 30 discount	16.0%		1			($14,655)	($860)
					Hardware Subtotal	**76,941**	**4,513**
Software							
SQL Server 2005 Enterprise x64 Edition with 25 CALs	810-04793	Microsoft	2	8,487	1	8,487	
SQL Server 2005 Client License	359-01911	Microsoft	2	156	25	3,900	
Windows Server 2003 Enterprise x64 Edition	P72-00274	Microsoft	2	2,334	1	2,334	
Microsoft Problem Resolution Services		Microsoft	2	245	1		245
Visual C++ Standard Edition	254-00170	Microsoft	2	109	1	109	included
Visual Basic 2003 .Net Professional	046-00856	Microsoft	2	109	1	109	included
					Subtotal	**14,939**	**245**
					Total	**$91,880**	**$4,758**

Three-Year Cost of Ownership:	**$96,638**
QphH @ 100GB:	**12600.3**
$ / QphH @ 100GB:	**$7.67 USD**

Pricing: 1=HP Direct: 800-203-6748; 2=Microsoft

Note 1 = Discount based on HP Direct guidence with large purchase and Net 30 discount.Applies to all lines with 1 in pricing column.

Note:The benchmark results and test methodology were audited by Lorna Livingtree of Performance Metrics, Inc. (www.perfmetrics.com).

Audited by: Lorna Livingtree of Performance Metrics Inc.

Prices used in TPC benchmarks reflect the actual prices a customer would pay for a one-time purchase of the stated components. Individually negotiated discounts are not permitted. Special prices based on assumptions about past or future purchases are not permitted. All discounts reflect standard pricing policies for the listed components. For complete details, see the pricing sections of the TPC benchmark specifications. If you find that the stated prices are not available according to these terms, please inform at pricing@tpc.org. Thank you.

	HP ProLiant DL585G1 4P	TPC-H Rev. 2.3.0
		Report Date: **Nov 4, 2005**
		Revision Date: **Mar 29, 2006**

Numerical Quantities

Measurement Results:

Database Scale Factor	= 100
Total Data Storage / Database Size	= 30.24
Start of Database Load	= 2005-11-01 10:46:01.217
End of Database Load	= 2005-11-01 11:55:12.763
Database Load Time	= 1:18:12
Query Streams for Throughput Test	= 5
TPC-H Power	= 15,610.1
TPC-H Throughput	= 10,170.8
TPC-H Composite Query-per-Hour Metric (QphH@100GB)	= 12,600.3
Total System Price Over 3 Years	= $96,638 USD
TPC-H Price/ Performance Metric ($/QphH@100GB)	= $7.67 USD

Measurement Intervals:

Measurement Interval in Throughput Test (Ts)	= 3,893.5 seconds

Duration of Stream Execution:

Stream ID	Seed	Start Date	Start time	Stop Date	Stop Time	Duration
Stream00	1101115512	11/1/2005	14:12:05	11/1/2005	14:27:52	0:15:47
Stream01	1101115513	11/1/2005	14:28:24	11/1/2005	15:21:02	0:52:38
Stream02	1101115514	11/1/2005	14:28:24	11/1/2005	15:26:57	0:58:33
Stream03	1101115515	11/1/2005	14:28:24	11/1/2005	15:25:17	0:56:53
Stream04	1101115516	11/1/2005	14:28:24	11/1/2005	15:25:20	0:56:56
Stream05	1101115517	11/1/2005	14:28:24	11/1/2005	15:24:57	0:56:33
Refresh00		11/1/2005	14:11:19	11/1/2005	14:28:23	0:17:04
Refresh01		11/1/2005	15:26:57	11/1/2005	15:28:23	0:01:26
Refresh02		11/1/2005	15:28:23	11/1/2005	15:29:45	0:01:22
Refresh03		11/1/2005	15:29:45	11/1/2005	15:31:03	0:01:17
Refresh04		11/1/2005	15:31:03	11/1/2005	15:32:10	0:01:08
Refresh05		11/1/2005	15:32:10	11/1/2005	15:33:17	0:01:07

	HP ProLiant DL585G1 4P	TPC-H Rev. 2.3.0
		Report Date: **Nov 4, 2005**
		Revision Date: **Mar 29, 2006**

TPC-H Timing Intervals (in seconds)

Query	Q1	Q2	Q3	Q4	Q5	Q6	Q7	Q8
Stream 00	118.5	3.2	7.7	9.0	20.2	9.8	23.8	30.4
Stream 01	433.6	22.7	23.9	40.0	74.0	27.1	94.4	85.1
Stream 02	582.7	41.9	18.0	25.8	70.2	61.3	97.7	154.8
Stream 03	527.2	28.8	11.1	80.6	62.8	23.1	110.4	106.7
Stream 04	523.8	23.8	28.8	36.5	85.5	20.5	74.5	90.1
Stream 05	615.9	18.5	25.6	46.0	61.7	18.2	65.3	111.7
Min Qi	433.6	18.5	11.1	25.8	61.7	18.2	65.3	85.1
Max Qi	615.9	41.9	28.8	80.6	85.5	61.3	110.4	154.8
Avg Qi	536.6	27.1	21.5	45.8	70.8	30.0	88.5	109.7
Query	**Q9**	**Q10**	**Q11**	**Q12**	**Q13**	**Q14**	**Q15**	**Q16**
Stream 00	131.9	12.2	14.2	51.8	39.9	5.0	4.8	15.0
Stream 01	324.3	38.2	53.5	165.0	187.4	19.3	16.8	59.8
Stream 02	336.2	41.3	116.8	151.3	174.1	17.6	16.8	80.5
Stream 03	347.8	35.8	40.2	176.0	165.1	16.5	34.6	52.8
Stream 04	476.0	43.7	58.8	193.0	153.5	20.5	12.6	50.5
Stream 05	332.0	39.2	40.7	173.9	161.5	42.3	24.5	48.2
Min Qi	324.3	35.8	40.2	151.3	153.5	16.5	12.6	48.2
Max Qi	476.0	43.7	116.8	193.0	187.4	42.3	34.6	80.5
Avg Qi	363.3	39.6	62.0	171.8	168.3	23.2	21.1	58.4
Query	**Q17**	**Q18**	**Q19**	**Q20**	**Q21**	**Q22**	**RF1**	**RF2**
Stream 00	21.0	126.4	47.3	11.1	225.4	17.5	46.2	31.2
Stream 01	36.9	519.4	85.7	64.0	695.6	91.1	55.8	30.2
Stream 02	116.3	652.9	109.9	110.5	454.6	81.4	48.0	32.7
Stream 03	71.1	664.8	91.4	77.7	614.0	74.3	44.5	31.4
Stream 04	28.9	617.8	99.0	86.3	618.0	73.6	36.3	29.6
Stream 05	35.6	623.4	77.3	55.6	696.7	78.3	33.8	31.5
Min Qi	28.9	519.4	77.3	55.6	454.6	73.6	33.8	29.6
Max Qi	116.3	664.8	109.9	110.5	696.7	91.1	55.8	32.7
Avg Qi	57.8	615.7	92.7	78.8	615.8	79.7	43.7	31.1

Abstract

Overview

This report documents the methodology and results of the TPC Benchmark™ H test conducted on the HP ProLiant DL585G1 using Microsoft SQL Server 2005 x64 Enterprise Edition, in conformance with the requirements of the TPC Benchmark™ H Standard Specification, Revision 2.3.0. The operating system used for the benchmark was Microsoft Windows 2003 x64 Enterprise Edition.

The benchmark results are summarized in the following table.

Hardware	Software	Total System Cost	QppH @ 100GB	QthH @ 100GB	QphH @ 100GB	$ / QphH @ 100GB
HP ProLiant DL585G1 4P	**Microsoft SQL Server 2005 x64 Windows Server 2003, Enterprise Edition**	**$96,638 USD**	**15,610.1**	**10,170.8**	**12,600.3**	**$ 7.67 USD**

The TPC Benchmark™ H was developed by the Transaction Processing Performance Council (TPC). The TPC was founded to define transaction processing benchmarks and to disseminate objective, verifiable performance data to the industry.

Standard and Executive Summary Statements

Pages ii-iv contains the Executive Summary and Numerical Quantities Summary of the benchmark results for the HP ProLiant DL585G1.

Auditor

The benchmark configuration, environment and methodology used to produce and validate the test results, and the pricing model used to calculate the cost per QppH and QthH were audited by Lorna Livingtree of Performance Metrics, Inc. to verify compliance with the relevant TPC specifications. The auditor's letter of attestation is attached in Section 9.1 "Auditors' Report."

© 2006 Hewlett-Packard Company. All rights reserved.

Table of Contents

ABSTRACT I
OVERVIEW I
STANDARD AND EXECUTIVE SUMMARY STATEMENTS I
AUDITOR I

TABLE OF CONTENTS II

1.0 GENERAL ITEMS 5
1.1 TEST SPONSOR 5
1.2 PARAMETER SETTINGS 5
1.3 CONFIGURATION ITEMS 5

2.0 CLAUSE 1: LOGICAL DATABASE DESIGN 7
2.1 TABLE DEFINITIONS 7
2.2 PHYSICAL ORGANIZATION OF DATABASE 7
2.3 HORIZONTAL PARTITIONING 7
2.4 REPLICATION 7

3.0 CLAUSE 2: QUERIES AND REFRESH FUNCTIONS RELATED ITEMS 8
3.1 QUERY LANGUAGE 8
3.2 RANDOM NUMBER GENERATION 8
3.3 SUBSTITUTION PARAMETERS GENERATION 8
3.4 QUERY TEXT AND OUTPUT DATA FROM DATABASE 8
3.5 QUERY SUBSTITUTION PARAMETERS AND SEEDS USED 8
3.6 ISOLATION LEVEL 9
3.7 REFRESH FUNCTIONS 9

4.0 CLAUSE 3: DATABASE SYSTEM PROPERTIES 10
4.1 ATOMICITY REQUIREMENTS 10
4.2 CONSISTENCY REQUIREMENTS 10
4.3 ISOLATION REQUIREMENTS 11
4.4 DURABILITY REQUIREMENTS 12

5.0 CLAUSE 4: SCALING AND DATABASE POPULATION 14
5.1 INITIAL CARDINALITY OF TABLES 14
5.2 DISTRIBUTION OF TABLES AND LOGS ACROSS MEDIA 14
5.3 MAPPING OF DATABASE PARTITIONS/REPLICATIONS 15
5.4 IMPLEMENTATION OF RAID 15
5.5 DBGEN MODIFICATIONS 16
5.6 DATABASE LOAD TIME 16
5.7 DATA STORAGE RATIO 16
5.8 DATABASE LOAD MECHANISM DETAILS AND ILLUSTRATION 16

6.0 CLAUSE 5: PERFORMANCE METRICS AND EXECUTION RULES RELATED ITEMS 18
6.1 STEPS IN THE POWER TEST 18
6.2 TIMING INTERVALS FOR EACH QUERY AND REFRESH FUNCTION 18
6.3 NUMBER OF STREAMS FOR THE THROUGHPUT TEST 18
6.4 START AND END DATE/TIMES FOR EACH QUERY STREAM 18
6.5 TOTAL ELAPSED TIME FOR THE MEASUREMENT INTERVAL 18
6.6 REFRESH FUNCTION START DATE/TIME AND FINISH DATE/TIME 18
6.7 TIMING INTERVALS FOR EACH QUERY AND EACH REFRESH FUNCTION FOR EACH STREAM 19

© 2006 Hewlett-Packard Company. All rights reserved.

6.8 PERFORMANCE METRICS 19
6.9 THE PERFORMANCE METRIC AND NUMERICAL QUANTITIES FROM BOTH RUNS 19
6.11 SYSTEM ACTIVITY BETWEEN TESTS 19

7.0 CLAUSE 6: SUT AND DRIVER IMPLEMENTATION RELATED ITEMS 20
7.1 DRIVER 20
7.2 IMPLEMENTATION SPECIFIC LAYER (ISL) 20
7.3 PROFILE-DIRECTED OPTIMIZATION 21

8.0 CLAUSE 7: PRICING RELATED ITEMS 22
8.1 HARDWARE AND SOFTWARE USED 22
8.2 TOTAL 3 YEAR PRICE 22
8.3 AVAILABILITY DATE 22
8.4 COUNTRY-SPECIFIC PRICING 22

9.0 CLAUSE 9: RELATED ITEMS 23
9.1 AUDITORS' REPORT 23

APPENDIX A: TUNABLE PARAMETERS 26
A.1 MICROSOFT SQL SERVER 2005 VERSION 26
A.2 SQL SERVER 2005 INSTALLATION 26
A.3 SQL SERVER 2005 STARTUP PARAMETERS 26
A.4 MICROSOFT SQL SERVER 2005 CONFIGURATION PARAMETERS 26
A.5 WINDOWS 2003 CONFIGURATION 26
A.6 SYSTEM HARDWARE INFORMATION 27

APPENDIX B: DATABASE BUILD SCRIPTS 59
B.1 CREATEDATABASE.SQL 59
B.2 CREATETABLES.SQL 59
B.3 CREATEINDEXES_1.SQL 60
B.4 CREATEINDEXES_2.SQL 60
B.5 CREATEFK.SQL 60
B.6 CREATEBACKUPDEVICES.SQL 61
B.7 BACKUPDATABASE.SQL 61
B.8 RESTOREDATABASE.SQL 61
B.9 MOVETEMPDB.SQL 61
B.10 RESIZETEMPDB.SQL 61
B.11 DROPLOADFG.SQL 62

APPENDIX C: QUERY TEXT AND OUTPUT 63
C.1 QUALIFICATION QUERIES AND OUTPUT 63

APPENDIX D: SEEDS AND QUERY SUBSTITUTION PARAMETERS 74

APPENDIX E: REFRESH FUNCTION SOURCE CODE 76
E.1 CREATERF1PROC.SQL 76
E.2 CREATERF2PROC.SQL 77

APPENDIX G: PRICE QUOTATIONS 79

© 2006 Hewlett-Packard Company. All rights reserved.

1.0 General Items

1.1 Test Sponsor

A statement identifying the benchmark sponsor(s) and other participating companies must be provided.

This benchmark was sponsored by Hewlett-Packard Company. The benchmark was developed and engineered by Hewlett-Packard Company. Testing took place at HP benchmarking laboratories in Houston, Texas.

1.2 Parameter Settings

Settings must be provided for all customer-tunable parameters and options which have been changed from the defaults found in actual products, including by not limited to:

- *Database Tuning Options*
- *Optimizer/Query execution options*
- *Query processing tool/language configuration parameters*
- *Recovery/commit options*
- *Consistency/locking options*
- *Operating system and configuration parameters*
- *Configuration parameters and options for any other software component incorporated into the pricing structure*
- *Compiler optimization options*

This requirement can be satisfied by providing a full list of all parameters and options, as long as all those which have been modified from their default values have been clearly identified and these parameters and options are only set once.

Appendix A, "Tunable Parameters," contains a list of all database parameters and operating system parameters.

1.3 Configuration Items

Diagrams of both measured and priced configurations must be provided, accompanied by a description of the differences. This includes, but is not limited to:

- *Number and type of processors*
- *Size of allocated memory, and any specific mapping/partitioning of memory unique to the test.*
- *Number and type of disk units (and controllers, if applicable).*
- *Number of channels or bus connections to disk units, including their protocol type.*
- *Number of LAN (e.g. Ethernet) Connections, including routers, workstations, terminals, etc., that were physically used in the test or are incorporated into the pricing structure.*
- *Type and the run-time execution location of software components (e.g., DBMS, query processing tools/languages, middle-ware components, software drivers, etc.).*

© 2006 Hewlett-Packard Company. All rights reserved.

The server System Under Test (SUT), a HP ProLiant DL585G1 4P , depicted in Figure 1.1, consisted of :

4x AMD Opteron 2.4GHz dual core with 1MB L2 Cache
64 GB of memory
8 x HP Smart Array P600 Controllers
8 x HP StorageWorks MSA50 Enclosures
80 x 36GB Pluggable SAS 10K rpm drives
4 x 36GB Pluggable SCSI 15K rpm drives

Figure 1.1 Benchmarked & Priced configuration

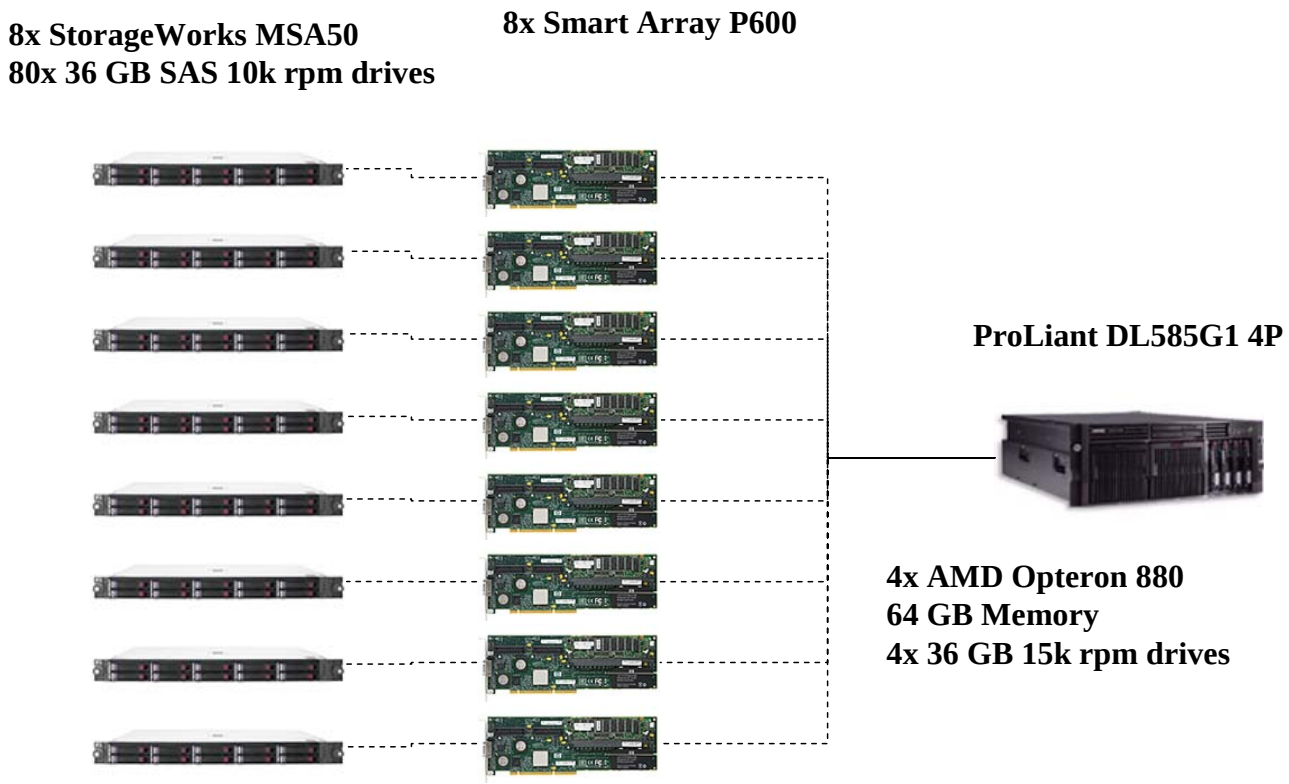

© 2006 Hewlett-Packard Company. All rights reserved.

2.0 Clause 1: Logical Database Design

2.1 Table Definitions

Listings must be provided for all table definition statements and all other statements used to set up the test and qualification databases. (8.1.2.1)

Appendix B, "Database Build Scripts," contains the table definitions and the program used to load the database.

2.2 Physical Organization of Database

The physical organization of tables and indices, within the test and qualification databases, must be disclosed. If the column ordering of any table is different from that specified in Clause 1.4, it must be noted.

Appendix B, "Database Build Scripts," contains the DDL for the index definitions.

2.3 Horizontal Partitioning

Horizontal partitioning of tables and rows in the test and qualification databases (see Clause 1.5.4) must be disclosed.

Horizontal partitioning was not used

2.4 Replication

Any replication of physical objects must be disclosed and must conform to the requirements of Clause 1.5.6.

No replication was used.

© 2006 Hewlett-Packard Company. All rights reserved.

3.0 Clause 2: Queries and Refresh Functions Related Items

3.1 Query Language

The query language used to implement the queries must be identified.

SQL was the query language used.

3.2 Random Number Generation

The method of verification for the random number generation must be described unless the supplied DBGEN and QGEN were used.

The TPC-supplied DBGEN version 2.3.0 and QGEN version 2.3.0 were used to generate all database populations.

3.3 Substitution Parameters Generation

The method used to generate values for substitution parameters must be disclosed. If QGEN is not used for this purpose, then the source code of any non-commercial tool used must be disclosed. If QGEN is used, the version number, release number, modification number and patch level of QGEN must be disclosed.

The supplied QGEN version 2.3.0 was used to generate the substitution parameters.

3.4 Query Text and Output Data from Database

The executable query text used for query validation must be disclosed along with the corresponding output data generated during the execution of the query text against the qualification database. If minor modifications (see Clause 2.2.3) have been applied to any functional query definitions or approved variants in order to obtain executable query text, these modifications must be disclosed and justified. The justification for a particular minor query modification can apply collectively to all queries for which it has been used. The output data for the power and throughput tests must be made available electronically upon request..

Appendix C contains the query text and query output. The following modifications were used:

- In Q1, Q4, Q5, Q6, Q10, Q12, Q14, Q15 and Q20, the "dateadd" function is used to perform date arithmetic.
- In Q7, Q8 and Q9, the "datepart" function is used to extract part of a date (e.g., "YY").
- In Q2, Q3, Q10, Q18 and Q21, the "top" function is used to restrict the number of output rows.
- The word GO is used as a command delimiter.

3.5 Query Substitution Parameters and Seeds Used

All the query substitution parameters used during the performance test must be disclosed in tabular format, along with the seeds used to generate these parameters.

Appendix D contains the seed and query substitution parameters used.

© 2006 Hewlett-Packard Company. All rights reserved.

3.6 Isolation Level

The isolation level used to run the queries must be disclosed. If the isolation level does not map closely to one of the isolation levels defined in Clause 3.4, additional descriptive detail must be provided.

The queries and transactions were run with isolation level 1.

3.7 Refresh Functions

The details of how the refresh functions were implemented must be disclosed (including source code of any non-commercial program used).

Appendix E contains the source code for the refresh functions.

© 2006 Hewlett-Packard Company. All rights reserved.

4.0 Clause 3: Database System Properties

4.1 Atomicity Requirements

The results of the ACID tests must be disclosed along with a description of how the ACID requirements were met. This includes disclosing the code written to implement the ACID Transaction and Query.

All ACID tests were conducted according to specification. The Atomicity, Isolation, Consistency and Durability tests were performed on the HP ProLiant DL585G1.

4.1.1 Atomicity of the Completed Transactions

Perform the ACID Transaction for a randomly selected set of input data and verify that the appropriate rows have been changed in the ORDER, LINEITEM, and HISTORY tables.

The following steps were performed to verify the Atomicity of completed transactions.

1. The total price from the ORDER table and the extended price from the LINEITEM table were retrieved for a randomly selected order key.
2. The ACID Transaction was performed using the order key from step 1.
3. The ACID Transaction committed.
4. The total price from the ORDER table and the extended price from the LINEITEM table were retrieved for the same order key. It was verified that the appropriate rows had been changed.

4.1.2 Atomicity of Aborted Transactions

Perform the ACID transaction for a randomly selected set of input data, submitting a ROLLBACK of the transaction for the COMMIT of the transaction. Verify that the appropriate rows have not been changed in the ORDER, LINEITEM, and HISTORY tables.

The following steps were performed to verify the Atomicity of the aborted ACID transaction:

1. The total price from the ORDER table and the extended price from the LINEITEM table were retrieved for a randomly selected order key.
2. The ACID Transaction was performed using the order key from step 1. The transaction was stopped prior to the commit.
3. The ACID Transaction was ROLLED BACK. .
4. The total price from the ORDER table and the extended price from the LINEITEM table were retrieved for the same order key used in steps 1 and 2. It was verified that the appropriate rows had not been changed.

4.2 Consistency Requirements

Consistency is the property of the application that requires any execution of transactions to take the database from one consistent state to another.

A consistent state for the TPC-H database is defined to exist when:

*O_TOTALPRICE = SUM(L_EXTENDEDPRICE – L_DISCOUNT) * (1 + L_TAX)*
For each ORDER and LINEITEM defined by (O_ORDERKEY = L_ORDERKEY)

4.2.1 Consistency Tests

Verify that ORDER and LINEITEM tables are initially consistent as defined in Clause 3.3.2.1, based upon a random sample of at least 10 distinct values of O_ORDERKEY.

The following steps were performed to verify consistency:
1. The consistency of the ORDER and LINEITEM tables was verified based on a sample of O_ORDERKEYs.

© 2006 Hewlett-Packard Company. All rights reserved.

2. One hundred ACID Transactions were submitted from each of six execution streams.
3. The consistency of the ORDER and LINEITEM tables was reverified.

4.3 Isolation Requirements

Operations of concurrent transactions must yield results which are indistinguishable from the results which would be obtained by forcing each transaction to be serially executed to completion in some order.

4.3.1 Isolation Test 1 - Read-Write Conflict with Commit

Demonstrate isolation for the read-write conflict of a read-write transaction and a read-only transaction when the read-write transaction is committed.

The following steps were performed to satisfy the test of isolation for a read-only and a read-write committed transaction:

1. An ACID Transaction was started for a randomly selected O_KEY, L_KEY and DELTA. The ACID Transaction was suspended prior to Commit.
2. An ACID query was started for the same O_KEY used in step 1. The ACID query blocked and did not see any uncommitted changes made by the ACID Transaction.
3. The ACID Transaction was resumed and committed.
4. The ACID query completed. It returned the data as committed by the ACID Transaction.

4.3.2 Isolation Test 2 - Read-Write Conflict with Rollback

Demonstrate isolation for the read-write conflict of a read-write transaction and a read-only transaction when the read-write transaction is rolled back.

The following steps were performed to satisfy the test of isolation for read-only and a rolled back read-write transaction:

1. An ACID transaction was started for a randomly selected O_KEY, L_KEY and DELTA. The ACID Transaction was suspended prior to Rollback.
2. An ACID query was started for the same O_KEY used in step 1. The ACID query did not see any uncommitted changes made by the ACID Transaction.
3. The ACID Transaction was ROLLED BACK.
4. The ACID query completed.

4.3.3 Isolation Test 3 - Write-Write Conflict with Commit

Demonstrate isolation for the write-write conflict of two update transactions when the first transaction is committed.

The following steps were performed to verify isolation of two update transactions:

1. An ACID Transaction T1 was started for a randomly selected O_KEY, L_KEY and DELTA. The ACID transaction T1 was suspended prior to Commit.
2. Another ACID Transaction T2 was started using the same O_KEY and L_KEY and a randomly selected DELTA.
3. T2 waited.
4. The ACID transaction T1 was allowed to Commit and T2 completed.
5. It was verified that:

   T2.L_EXTENDEDPRICE = T1.L_EXTENDEDPRICE
   +(DELTA1*(T1.L_EXTENDEDPRICE/T1.L_QUANTITY))

4.3.4 Isolation Test 4 - Write-Write Conflict with Rollback

Demonstrate isolation for the write-write conflict of two update transactions when the first transaction is rolled back.

The following steps were performed to verify the isolation of two update transactions after the first one is rolled back:

© 2006 Hewlett-Packard Company. All rights reserved.

1. An ACID Transaction T1 was started for a randomly selected O_KEY, L_KEY and DELTA. The ACID Transaction T1 was suspended prior to Rollback.
2. Another ACID Transaction T2 was started using the same O_KEY and L_KEY used in step 1 and a randomly selected DELTA.
3. T2 waited.
4. T1 was allowed to ROLLBACK and T2 completed.
5. It was verified that T2.L_EXTENDEDPRICE = T1.L_EXTENDEDPRICE.

4.3.5 Isolation Test 5 – Concurrent Read and Write Transactions on Different Tables

Demonstrate the ability of read and write transactions affecting different database tables to make progress concurrently.

The following steps were performed:

1. An ACID Transaction T1 for a randomly selected O_KEY, L_KEY and DELTA. The ACID Transaction T1 was suspended prior to Commit.
2. Another ACID Transaction T2 was started using random values for PS_PARTKEY and PS_SUPPKEY.
3. T2 completed.
4. T1 completed and the appropriate rows in the ORDER, LINEITEM and HISTORY tables were changed.

4.3.6 Isolation Test 6 – Update Transactions During Continuous Read-Only Query Stream

Demonstrate the continuous submission of arbitrary (read-only) queries against one or more tables of the database does not indefinitely delay update transactions affecting those tables from making progress.

The following steps were performed:

1. An ACID Transaction T1 was started, executing Q1 against the qualification database. The substitution parameter was chosen from the interval [0..2159] so that the query ran for a sufficient amount of time.
2. Before T1 completed, an ACID Transaction T2 was started using randomly selected values of O_KEY, L_KEY and DELTA.
3. T2 completed before T1 completed.
4. It was verified that the appropriate rows in the ORDER, LINEITEM and HISTORY tables were changed.

4.4 Durability Requirements

The tested system must guarantee durability: the ability to preserve the effects of committed transactions and insure database consistency after recovery from any one of the failures listed in Clause 3.5.2.

4.4.1 Permanent Unrecoverable Failure of Any Durable Medium and Loss of System Power

Guarantee the database and committed updates are preserved across a permanent irrecoverable failure of any single durable medium containing TPC-H database tables or recovery log tables.

The database log was stored on a RAID-1 protected array of two physical drives. The tables for the database were stored on 8 RAID-0 arrays each containing 10 physical drives. A backup of the database was taken. The backup was spread across 8 RAID-1 arrays.

The tests were conducted on the qualification database. The steps performed are shown below:

1. The complete database was backed up.
2. Six streams of ACID transactions were started. Each stream executed a minimum of 100 transactions.
3. While the test was running, one of the disks from the database RAID-1 log was removed.
4. After it was determined that the test would still run with the loss of a log disk, one physical drive of a RAID-0 data volume was removed.
5. A checkpoint was issued to force a failure.
6. The six streams of ACID transactions failed and recorded their number of committed transaction in success files.

© 2006 Hewlett-Packard Company. All rights reserved.

7. The database log was dumped to disk.
8. The database and log disks were replaced with new disks and RAID rebuild process started
9. When log RAID rebuild process finished a database restore was done.
10. A command was issued causing the database to run through its roll-forward recovery.
11. The counts in the success files and the HISTORY table count were compared and were found to match.

4.4.2 System Crash

Guarantee the database and committed updates are preserved across an instantaneous interruption (system crash/system hang) in processing which requires the system to reboot to recover.

1. Six streams of ACID transactions were started. Each stream executed a minimum of 100 transactions.
2. While the streams of ACID transactions were running, the system was powered off.
3. When power was restored, the system rebooted and the database was restarted.
4. The database went through a recovery period.
5. The success file and the HISTORY table counts were compared and were found to match.

4.4.3 Memory Failure

Guarantee the database and committed updates are preserved across failure of all or part of memory (loss of contents).

See section 4.4.2

© 2006 Hewlett-Packard Company. All rights reserved.

5.0 Clause 4: Scaling and Database Population

5.1 Initial Cardinality of Tables

The cardinality (e.g., the number of rows) of each table of the test database, as it existed at the completion of the database load (see clause 4.2.5) must be disclosed.

Table 5.1 lists the TPC Benchmark H defined tables and the row count for each table as they existed upon completion of the build.

Table 5. 1: Initial Number of Rows

Table Name	Row Count
Region	5
Nation	25
Supplier	1,000,000
Customer	15,000,000
Part	20,000,000
Partsupp	80,000,000
Orders	150,000,000
Lineitem	600,037,902

5.2 Distribution of Tables and Logs Across Media

The distribution of tables and logs across all media must be explicitly described for the tested and priced systems.

Microsoft SQL Server was configured on a HP ProLiant DL585G1 with the following configuration:

8 x Smart Array P600 disk controllers
8 x StorageWorks MSA50 Enclosures
80 x 36GB SAS 10k rpm external disk drives
4 x 36GB SCSI 15k rpm internal disk drives

All 84 disks were used to hold table data, indexes, database log and the temporary database (TempDB).

A detailed description of distribution of database filegroups and log can be found in Table 5.2.1

© 2006 Hewlett-Packard Company. All rights reserved.

Table 5.2.1: SMART Array Controller Disk Array to Logical Drive Mapping

SMART Array Controller	SMART Logical Drive Array Letter	Number of Physical Drives in SMART LDA	SMART Logical Drive Number	SMART Fault Tolerance	Disk Format	Size (MB)	Contents
Slot 1	A	10	1	RAID0	RAW	26000	Tpch100g
			2	RAID0	RAW	13000	TempDB
			3	RAID1	NTFS	100000	LoadFg
Slot 2	A	10	1	RAID0	RAW	26000	Tpch100g
			2	RAID0	RAW	13000	TempDB
			3	RAID1	NTFS	100000	LoadFg
Slot 3	A	10	1	RAID0	RAW	26000	Tpch100g
			2	RAID0	RAW	13000	TempDB
			3	RAID1	NTFS	100000	LoadFg
Slot 4	A	10	1	RAID0	RAW	26000	Tpch100g
			2	RAID0	RAW	13000	TempDB
			3	RAID1	NTFS	100000	LoadFg
Slot 5	A	10	1	RAID0	RAW	26000	Tpch100g
			2	RAID0	RAW	13000	TempDB
			3	RAID1	NTFS	100000	LoadFg
Slot 6	A	10	1	RAID0	RAW	26000	Tpch100g
			2	RAID0	RAW	13000	TempDB
			3	RAID1	NTFS	100000	LoadFg
Slot 7	A	10	1	RAID0	RAW	26000	Tpch100g
			2	RAID0	RAW	13000	TempDB
			3	RAID1	NTFS	100000	LoadFg
Slot 8	A	10	1	RAID0	RAW	26000	Tpch100g
			2	RAID0	RAW	13000	TempDB
			3	RAID1	NTFS	100000	LoadFg
			4	RAID0	RAW	6000	Tpch1g
Slot 0	A	2	1	RAID1	NTFS	36000	OS
Slot 0	B	2	1	RAID1	RAW	20000	Tpch100Log
			2	RAID1	RAW	1000	Tpch1GLog
			3	RAID0	RAW	27500	TempLog

5.3 Mapping of Database Partitions/Replications

The mapping of database partitions/replications must be explicitly described.

Database partitioning/replication was not used..

5.4 Implementation of RAID

Implementations may use some form of RAID to ensure high availability. If used for data, auxiliary storage (e.g. indexes) or temporary space, the level of RAID used must be disclosed for each device.

© 2006 Hewlett-Packard Company. All rights reserved.

RAID 0 was used for database filegroups and tempdb, and RAID 1 for database recovery logs.

5.5 DBGEN Modifications

The version number, release number, modification number, and patch level of DBGEN must be disclosed. Any modifications to the DBGEN (see Clause 4.2.1) source code must be disclosed. In the event that a program other than DBGEN was used to populate the database, it must be disclosed in its entirety.

A modified DBGEN version 2.3.0 was used for database population. The modifed version differs only in column order for output flatfile. The only modified file, Print.C, is included in Appendix F.1

5.6 Database Load time

The database load time for the test database (see clause 4.3) must be disclosed.

The database load time was 1 hour 18 minutes 12 seconds.

5.7 Data Storage Ratio

The data storage ratio must be disclosed. It is computed by dividing the total data storage of the priced configuration (expressed in GB) by the size chosen for the test database as defined in 4.1.3.1. The ratio must be reported to the nearest 1/100th, rounded up.

Disk Type	Number of Disks	Total Disk Space	Data Storage Ratio
36 GB	84	3024 GB	30.24

5.8 Database Load Mechanism Details and Illustration

The details of the database load must be disclosed, including a block diagram illustrating the overall process. Disclosure of the load procedure includes all steps, scripts, input and configuration files required to completely reproduce the test and qualification databases.

Flat files for each of the tables were created using DBGEN.
The tables were loaded as depicted in Figure 5-8.

© 2006 Hewlett-Packard Company. All rights reserved.

Figure 5.8: Block Diagram of Database Load Process

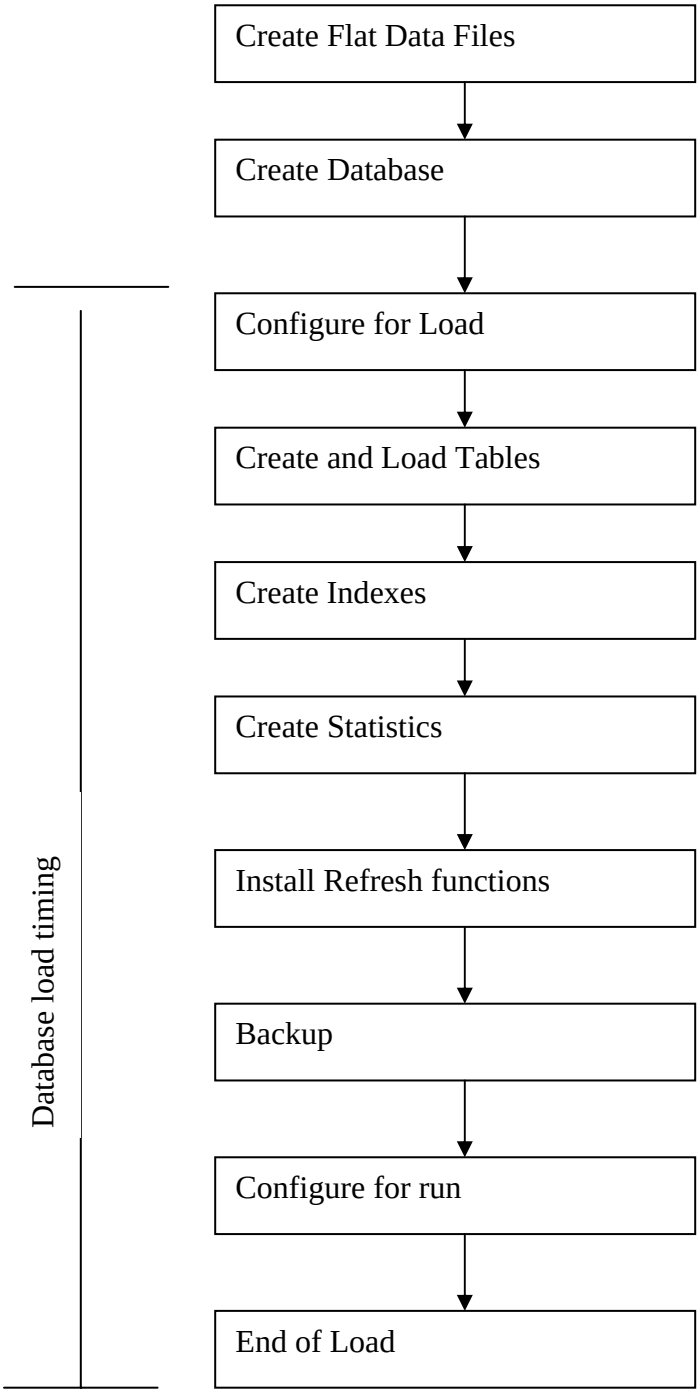

© 2006 Hewlett-Packard Company. All rights reserved.

6.0 Clause 5: Performance Metrics and Execution Rules Related Items

6.1 Steps in the Power Test

The details of the steps followed to implement the power test (e.g., system boot, database restart, etc.) must be disclosed.

The following steps were used to implement the power test:

1 The system was rebooted
2. RF1 Refresh Transaction
3. Stream 00 Execution
4. RF2 Refresh Transaction.

6.2 Timing Intervals for Each Query and Refresh Function

The timing intervals (see Clause 5.3.6) for each query of the measured set and for both refresh functions must be reported for the power test.

The timing intervals for each query and both refresh functions are given in the Numerical Quantities Summary earlier in the executive summary.

6.3 Number of Streams for The Throughput Test

The number of execution streams used for the throughput test must be disclosed.

Five streams were used for the Throughput Test.

6.4 Start and End Date/Times for Each Query Stream

The start time and finish time for each query execution stream must be reported for the throughput test.

The Numerical Quantities Summary contains the start and stop times for the query execution streams run on the system reported.

6.5 Total Elapsed Time for the Measurement Interval

The total elapsed time of the measurement interval(see Clause 5.3.5) must be reported for the throughput test.

The Numerical Quantities Summary contains the timing intervals for the throughput test run on the system reported.

6.6 Refresh Function Start Date/Time and Finish Date/Time

Start and finish time for each update function in the update stream must be reported for the throughput test.

© 2006 Hewlett-Packard Company. All rights reserved.

Stream ID	RF	Start Date	Start time	Stop Date	Stop Time
Stream00	RF1	11/1/2005	14:11:19	11/1/2005	14:12:05
Stream00	RF2	11/1/2005	14:27:52	11/1/2005	14:28:23
Stream01	RF1	11/1/2005	15:26:57	11/1/2005	15:27:53
Stream01	RF2	11/1/2005	15:27:53	11/1/2005	15:28:23
Stream02	RF1	11/1/2005	15:28:23	11/1/2005	15:29:12
Stream02	RF2	11/1/2005	15:29:12	11/1/2005	15:29:45
Stream03	RF1	11/1/2005	15:29:45	11/1/2005	15:30:31
Stream03	RF2	11/1/2005	15:30:31	11/1/2005	15:31:03
Stream04	RF1	11/1/2005	15:31:03	11/1/2005	15:31:40
Stream04	RF2	11/1/2005	15:31:40	11/1/2005	15:32:10
Stream05	RF1	11/1/2005	15:32:10	11/1/2005	15:32:45
Stream05	RF2	11/1/2005	15:32:45	11/1/2005	15:33:17

6.7 Timing Intervals for Each Query and Each Refresh Function for Each Stream

The timing intervals (see Clause 5.3.6) for each query of each stream and for each update function must be reported for the throughput test.

The timing intervals for each query and each update function are given in the Numerical Quantities Summary earlier in the executive summary.

6.8 Performance Metrics

The computed performance metrics, related numerical quantities and the price performance metric must be reported.

The Numerical Quantities Summary contains the performance metrics, related numerical quantities, and the price/performance metric for the system reported.

6.9 The Performance Metric and Numerical Quantities from Both Runs

A description of the method used to determine the reproducibility of the measurement results must be reported. This must include the performance metrics (QppH and QthH) from the reproducibility runs.

Performance results from the first two executions of the TPC-H benchmark indicated the following difference for the metric points:

Run	QppH @ 100GB	QthH @ 100GB	QphH @ 100GB
Run 1	16096.6	10183.6	12803.2
Run 2	15610.1	10170.8	12600.3

6.11 System Activity Between Tests

Any activity on the SUT that takes place between the conclusion of Run1 and the beginning of Run2 must be disclosed.

SQL Server was restarted between runs.

© 2006 Hewlett-Packard Company. All rights reserved.

7.0 Clause 6: SUT and Driver Implementation Related Items

7.1 Driver

A detailed description of how the driver performs its functions must be supplied, including any related source code or scripts. This description should allow an independent reconstruction of the driver.

The TPC-H benchmark was implemented using a Microsoft tool called StepMaster. This tool consist of GUI tool that allows the configuration of steps and a run only version which was used to execute the load and runs. StepMaster is a general purpose test tool which can drive ODBC and shell commands. Within StepMaster, the user designs a workspace corresponding to the sequence of operations (or steps) to be executed. When the workspace is executed, StepMaster records information about the run into a database as well as a log file for later analysis.

StepMaster provides a mechanism for creating parallel streams of execution. This is used in the throughput tests to drive the query and refresh streams. Each step is timed using a millisecond resolution timer. A timestamp T1 is taken before beginning the operation and a timestamp T2 is taken after completing the operation. These times are recorded in a database as well as a log file for later analysis.

Two types of ODBC connections are supported. A dynamic connection is used to execute a single operation and is closed when the operation finishes. A static connection is held open until the run completes and may be used to execute more than one step. A connection (either static or dynamic) can only have one outstanding operation at any time.

In TPC-H, static connections are used for the query streams in the power and throughput tests. StepMaster reads an Access database to determine the sequence of steps to execute. These commands are represented as the Implementation Specific Layer. StepMaster records its execution history, including all timings, in the Access database. Additionally, StepMaster writes a textual log file of execution for each run.
The source code is disclosed on Appendix F

7.2 Implementation Specific Layer (ISL)

If an implementation-specific layer is used, then a detailed description of how it performs its functions must be supplied, including any related source code or scripts. This description should allow an independent reconstruction of the implementation-specific layer.

The StepMaster Runonly program is used to control and track the execution of queries, via commands stored in a Microsoft Access database. The source of this program is contained in Appendix F. The following steps are performed, to accomplish the Power and Throughput Runs:

1. Power Run
   - Execute 16 concurrent RF1 threads, each of which will apply a segment of a refresh set generated by dbgen. Each thread submits multiple transactions, where a transaction spans a set of orders and their associated line items.
   - Execute the Stream 0 queries in the order according to TPC Benchmark H Specification, Appendix A
   - Execute 16 concurrent RF2 threads, each of which will apply a segment of a refresh set generated by dbgen. Each thread submits multiple transactions, where a transaction spans a set of orders and their associated line items.
2. Throughput Run
   - Execute 5 concurrent query streams. Each stream executes queries in the order according to TPC Benchmark H Specification, Appendix A, for the appropriate Stream ID (01-07). Upon completion of each stream, a semaphore is set to indicate completion.
   - Execute 5 consecutive RF1/RF2 transactions, against ascending Refresh sets produced by dbgen.

© 2006 Hewlett-Packard Company. All rights reserved.

- The first RF1 waits on a semaphore prior to beginning its insert operations.

Each step is timed by StepMaster. The timing information, together with an activity log, are stored for later analysis. The inputs and results of steps are stored in text files for later analysis.

7.3 Profile-Directed Optimization

If profile-directed optimization as described in Clause 5.2.9 is used, such used must be disclosed.

Profile-directed optimization was not used.

© 2006 Hewlett-Packard Company. All rights reserved.

8.0 Clause 7: Pricing Related Items

8.1 Hardware and Software Used

A detailed list of hardware and software used in the priced system must be reported. Each item must have vendor part number, description, and release/revision level, and either general availability status or committed delivery date. If package-pricing is used, contents of the package must be disclosed. Pricing source(s) and effective date(s) of price(s) must also be reported.

A detailed list of all hardware and software, including the 3-year price, is provided in the Executive Summary at the front of this report. The price quotations are included in Appendix G, at the end of this document.

8.2 Total 3 Year Price

The total 3-year price of the entire configuration must be reported including: hardware, software, and maintenance charges. Separate component pricing is recommended. The basis of all discounts used must be disclosed.

A detailed list of all hardware and software, including the 3-year price, is provided in the Executive Summary at the front of this report. The price quotations are included in Appendix G, at the end of this document. As a large purchase, this purchase qualifies for a 16% discount from Hewlett-Packard Company.

8.3 Availability Date

The committed delivery date for general availability of products used in the price calculations must be reported. When the priced system includes products with different availability dates, the availability date reported on the executive summary must be the date by which all components are committed to being available. The full disclosure report must report availability dates individually for at least each of the categories for which a pricing subtotal must be provided.

The HP ProLiant DL585G1, system memory, additional processors, disk controllers and hard drives are available at the time of publication. All other hardware is generally available at the time of publication.

The system software, Microsoft Windows Server 2003, Enterprise Edition and the database software, Microsoft SQL Server 2005 x64 Enterprise Edition are generally available at the time of publication.

8.4 Country-Specific Pricing

Additional Clause 7 related items may be included in the Full Disclosure Report for each country-specific priced configuration. Country-specific pricing is subject to Clause 7.1.7.

The configuration is priced for the United States of America.

© 2006 Hewlett-Packard Company. All rights reserved.

9.0 Clause 9: Related Items

9.1 Auditors' Report

The auditor's agency name, address, phone number, and Attestation letter with a brief audit summary report indicating compliance must be included in the full disclosure report. A statement should be included specifying who to contact in order to obtain further information regarding the audit process.

This implementation of the TPC Benchmark H was audited by Lorna Livingtree of Performance Metrics. Further information regarding the audit process may be obtained from:

Performance Metrics, Inc.
PO Box 984
Klamath, CA 95548
Telephone: (707) 482-0523
Fax: (707) 482-0575

For a copy of this disclosure, go to www.tpc.org.

© 2006 Hewlett-Packard Company. All rights reserved.

PERFORMANCE METRICS INC.
TPC Certified Auditors

November 1, 2005

Mr. Daniel Pol
Hewlett-Packard Company
20555 SH 249
Houston, TX 77077

I have verified the TPC Benchmark™ H for the following configuration:

Platform: ProLiant DL585G1 4P
Database Manager: Microsoft SQL Server 2005 Enterprise Edition
Operating System: Windows Server 2003 Enterprise Edition

CPU's	Memory	Total Disks	Qpph@ 100GB	QthH@100GB	QphH@100GB
4 AMD Opterons @ 2.4 Ghz	64 GB	84 @ 36 GB	**15,610.1**	**10,170.8**	**12,600.3**

In my opinion, these performance results were produced in compliance with the TPC requirements for the benchmark. The following attributes of the benchmark were given special attention:

- The database tables were defined with the proper columns, layout and sizes.
- The tested database was correctly scaled and populated for 100GB using DBGEN. The version of DBGEN was 2.3.0.
- The qualification database layout was identical to the tested database except for the number and size of the files and nodes.
- The query text was verified to use only compliant variants and minor modifications.
- The executable query text was generated by QGEN and submitted through a standard interactive interface. The version of QGEN was 2.3.0.
- The validation of the query text against the qualification database produced compliant results.

PO Box 984 Klamath, CA 95548
(707) 482-0523 fax: (707) 482-0575
email: LornaL@PerfMetrics.com

© 2006 Hewlett-Packard Company. All rights reserved.

- The refresh functions were properly implemented and executed the correct number of inserts and deletes.
- The load timing was properly measured and reported.
- The execution times were correctly measured and reported.
- The performance metrics were correctly computed and reported.
- The repeatability of the measurement was verified.
- The ACID properties were successfully demonstrated and verified.
- The system pricing was checked for major components and maintenance.
- The executive summary pages of the FDR were verified for accuracy.

Auditor's Notes:
None.

Sincerely,

Lorna Livingtree

Lorna Livingtree
Auditor

PO Box 984 Klamath, CA 95548
(707) 482-0523 fax: (707) 482-0575
email: LornaL@PerfMetrics.com

© 2006 Hewlett-Packard Company. All rights reserved.

Appendix A: Tunable Parameters

- *Note: These are the settings used during the power test. The settings altered for the load are documented in Appendix B.*

A.1 Microsoft SQL Server 2005 Version

The following text was output was generated by executing the select @@version command:

Microsoft SQL Server 2005 - 9.00.1399.06 (X64)
Oct 14 2005 00:35:21
Copyright (c) 1988-2005 Microsoft Corporation
Enterprise Edition (64-bit) on Windows NT 5.2 (Build 3790: Service Pack 1)

A.2 SQL Server 2005 Installation

The installation followed the default options. For the sort order Latin1_General_binary was chosen. Client tools and development tools were not installed on the server. Mixed mode authentication was used.

A.3 SQL Server 2005 Startup Parameters

SQLSERVR -c -x - E -T697
-x Disable the Keeping of CPU time and cache-hit ratio statistics.
-c Start SQL Server independently of Windows NT Service Control Manager
-E Increase the number of consecutive extents allocated per file to 4
-T697 This trace flag turns on behavior that will be a default behavior in the released version of SQL Server 2005

A.4 Microsoft SQL Server 2005 Configuration Parameters

```
name                                ,minimum    ,maximum    ,config_value,run_value
-----------------------------------,-----------,-----------,------------,-----------
Ad Hoc Distributed Queries          ,          0,          1,          0,          0
affinity I/O mask                   ,-2147483648, 2147483647,          0,          0
affinity mask                       ,-2147483648, 2147483647,        255,        255
affinity64 I/O mask                 ,-2147483648, 2147483647,          0,          0
affinity64 mask                     ,-2147483648, 2147483647,          0,          0
Agent XPs                           ,          0,          1,          0,          0
allow updates                       ,          0,          1,          1,          1
awe enabled                         ,          0,          1,          0,          0
blocked process threshold           ,          0,      86400,          0,          0
c2 audit mode                       ,          0,          1,          0,          0
clr enabled                         ,          0,          1,          0,          0
cost threshold for parallelism      ,          0,      32767,          0,          0
cross db ownership chaining         ,          0,          1,          0,          0
cursor threshold                    ,         -1, 2147483647,         -1,         -1
Database Mail XPs                   ,          0,          1,          0,          0
default full-text language          ,          0, 2147483647,       1033,       1033
default language                    ,          0,       9999,          0,          0
default trace enabled               ,          0,          1,          1,          1
disallow results from triggers      ,          0,          1,          0,          0
fill factor (%)                     ,          0,        100,          0,          0
ft crawl bandwidth (max)            ,          0,      32767,        100,        100
ft crawl bandwidth (min)            ,          0,      32767,          0,          0
ft notify bandwidth (max)           ,          0,      32767,        100,        100
ft notify bandwidth (min)           ,          0,      32767,          0,          0
in-doubt xact resolution            ,          0,          2,          0,          0
index create memory (KB)            ,        704, 2147483647,      32768,      32768
lightweight pooling                 ,          0,          1,          1,          1
locks                               ,       5000, 2147483647,          0,          0
max degree of parallelism           ,          0,         64,          8,          8
max full-text crawl range           ,          0,        256,          4,          4
max server memory (MB)              ,         16, 2147483647,      62000,      62000
max text repl size (B)              ,          0, 2147483647,      65536,      65536
max worker threads                  ,        128,      32767,        300,        300
media retention                     ,          0,        365,          0,          0
min memory per query (KB)           ,        512, 2147483647,        512,        512
min server memory (MB)              ,          0, 2147483647,      60000,      60000
nested triggers                     ,          0,          1,          1,          1
network packet size (B)             ,        512,      32767,      32767,      32767
Ole Automation Procedures           ,          0,          1,          0,          0
open objects                        ,          0, 2147483647,          0,          0
PH timeout (s)                      ,          1,       3600,         60,         60
precompute rank                     ,          0,          1,          0,          0
priority boost                      ,          0,          1,          0,          0
query governor cost limit           ,          0, 2147483647,          0,          0
query wait (s)                      ,         -1, 2147483647, 2147483647, 2147483647
recovery interval (min)             ,          0,      32767,      32767,      32767
remote access                       ,          0,          1,          1,          1
remote admin connections            ,          0,          1,          0,          0
remote login timeout (s)            ,          0, 2147483647,         20,         20
remote proc trans                   ,          0,          1,          0,          0
remote query timeout (s)            ,          0, 2147483647,         60,         60
Replication XPs                     ,          0,          1,          0,          0
scan for startup procs              ,          0,          1,          0,          0
server trigger recursion            ,          0,          1,          1,          1
set working set size                ,          0,          1,          0,          0
show advanced options               ,          0,          1,          1,          1
SMO and DMO XPs                     ,          0,          1,          1,          1
SQL Mail XPs                        ,          0,          1,          0,          0
transform noise words               ,          0,          1,          0,          0
two digit year cutoff               ,       1753,       9999,       2049,       2049
user connections                    ,          0,      32767,          0,          0
user options                        ,          0,      32767,          0,          0
Web Assistant Procedures            ,          0,          1,          0,          0
xp_cmdshell                         ,          0,          1,          0,          0
```

A.5 Windows 2003 Configuration

The default installation of Windows 2003 Enterprise Edition was used. All default options were selected during the install except:

- A TCP/IP address was configured on the system.

Updated installation to optimize performance for applications. (System Properties > Advanced > Performance Options > Programs)

© 2006 Hewlett-Packard Company. All rights reserved.

A.6 System Hardware Information

System Information report written at: 10/27/05 14:51:28
System Name: PUMA
[System Summary]

Item Value
OS Name Microsoft(R) Windows(R) Server 2003 Enterprise x64 Edition

Version 5.2.3790 Service Pack 1 Build 3790
Other OS Description Not Available
OS Manufacturer Microsoft Corporation
System Name PUMA
System Manufacturer HP
System Model ProLiant DL585 G1
System Type x64-based PC
Processor AMD64 Family 15 Model 33 Stepping 2 AuthenticAMD ~2400 Mhz
Processor AMD64 Family 15 Model 33 Stepping 2 AuthenticAMD ~2400 Mhz
Processor AMD64 Family 15 Model 33 Stepping 2 AuthenticAMD ~2400 Mhz
Processor AMD64 Family 15 Model 33 Stepping 2 AuthenticAMD ~2400 Mhz
Processor AMD64 Family 15 Model 33 Stepping 2 AuthenticAMD ~2400 Mhz
Processor AMD64 Family 15 Model 33 Stepping 2 AuthenticAMD ~2400 Mhz
Processor AMD64 Family 15 Model 33 Stepping 2 AuthenticAMD ~2400 Mhz
Processor AMD64 Family 15 Model 33 Stepping 2 AuthenticAMD ~2400 Mhz
BIOS Version/Date HP A01, 8/26/2005
SMBIOS Version 2.3
Windows Directory C:\WINDOWS
System Directory C:\WINDOWS\system32
Boot Device \Device\HarddiskVolume1
Locale United States
Hardware Abstraction Layer Version = "5.2.3790.1830 (srv03_sp1_rtm.050324-1447)"
User Name Not Available
Time Zone Central Daylight Time
Total Physical Memory 65,367.27 MB
Available Physical Memory 1.19 GB
Total Virtual Memory 66.27 GB
Available Virtual Memory 5.17 GB
Page File Space 4.00 GB
Page File C:\pagefile.sys

[Hardware Resources]

[Conflicts/Sharing]

Resource Device
I/O Port 0x0000A000-0x0000AFFF PCI standard PCI-to-PCI bridge

I/O Port 0x0000A000-0x0000AFFF Smart Array P600 Controller

I/O Port 0x00000000-0x000003AF PCI bus
I/O Port 0x00000000-0x000003AF Direct memory access controller

Memory Address 0xF7C00000-0xF7FFFFFF PCI bus
Memory Address 0xF7C00000-0xF7FFFFFF PCI standard PCI-to-PCI bridge

I/O Port 0x000003C0-0x000003DF PCI bus
I/O Port 0x000003C0-0x000003DF PCI standard PCI-to-PCI bridge

I/O Port 0x000003C0-0x000003DF RAGE XL PCI (Microsoft Corporation)

Memory Address 0xF7F00000-0xF7FFFFFF PCI standard PCI-to-PCI bridge
Memory Address 0xF7F00000-0xF7FFFFFF Smart Array P600 Controller

Memory Address 0xF7E00000-0xF7EFFFFF PCI standard PCI-to-PCI bridge
Memory Address 0xF7E00000-0xF7EFFFFF Smart Array P600 Controller

I/O Port 0x00009000-0x00009FFF PCI standard PCI-to-PCI bridge

I/O Port 0x00009000-0x00009FFF Smart Array P600 Controller

I/O Port 0x00006000-0x00006FFF PCI standard PCI-to-PCI bridge

I/O Port 0x00006000-0x00006FFF Smart Array P600 Controller

I/O Port 0x00005000-0x00005FFF PCI standard PCI-to-PCI bridge

I/O Port 0x00005000-0x00005FFF Smart Array 5i

I/O Port 0x000000A0-0x000000A1 Motherboard resources

I/O Port 0x000000A0-0x000000A1 Programmable interrupt controller

IRQ 19 AMD PCI to USB Open Host Controller
IRQ 19 AMD PCI to USB Open Host Controller

Memory Address 0xA0000-0xBFFFF PCI bus
Memory Address 0xA0000-0xBFFFF PCI standard PCI-to-PCI bridge

Memory Address 0xA0000-0xBFFFF RAGE XL PCI (Microsoft Corporation)

I/O Port 0x00007000-0x0000AFFF PCI bus
I/O Port 0x00007000-0x0000AFFF PCI standard PCI-to-PCI bridge

I/O Port 0x00007000-0x0000AFFF Smart Array P600 Controller

Memory Address 0xF7B00000-0xF7BFFFFF PCI standard PCI-to-PCI bridge
Memory Address 0xF7B00000-0xF7BFFFFF Smart Array P600 Controller

Memory Address 0xF5F00000-0xF7BFFFFF PCI bus
Memory Address 0xF5F00000-0xF7BFFFFF PCI standard PCI-to-PCI bridge

Memory Address 0xF5E00000-0xF5EFFFFF PCI bus
Memory Address 0xF5E00000-0xF5EFFFFF PCI standard PCI-to-PCI bridge

I/O Port 0x000003B0-0x000003BB PCI bus

© 2006 Hewlett-Packard Company. All rights reserved.

I/O Port 0x000003B0-0x000003BB PCI standard PCI-to-PCI bridge

I/O Port 0x000003B0-0x000003BB RAGE XL PCI (Microsoft Corporation)

I/O Port 0x00004000-0x00004FFF PCI standard PCI-to-PCI bridge

I/O Port 0x00004000-0x00004FFF Base System Device

I/O Port 0x00008000-0x00008FFF PCI standard PCI-to-PCI bridge

I/O Port 0x00008000-0x00008FFF Smart Array P600 Controller

I/O Port 0x00000020-0x00000021 Motherboard resources

I/O Port 0x00000020-0x00000021 Programmable interrupt controller

[DMA]

Resource Device Status
Channel 7 Direct memory access controller OK
Channel 2 Standard floppy disk controller OK

[Forced Hardware]

Device PNP Device ID

[I/O]

Resource Device Status
0x00000000-0x000003AF PCI bus OK
0x00000000-0x000003AF Direct memory access controller OK

0x000003B0-0x000003BB PCI bus OK
0x000003B0-0x000003BB PCI standard PCI-to-PCI bridge OK

0x000003B0-0x000003BB RAGE XL PCI (Microsoft Corporation) OK
0x000003C0-0x000003DF PCI bus OK
0x000003C0-0x000003DF PCI standard PCI-to-PCI bridge OK

0x000003C0-0x000003DF RAGE XL PCI (Microsoft Corporation) OK
0x000003E0-0x00000FFF PCI bus OK
0x00001000-0x00006FFF PCI bus OK
0x00004000-0x00004FFF PCI standard PCI-to-PCI bridge OK

0x00004000-0x00004FFF Base System Device OK
0x00004800-0x000048FF Base System Device OK
0x00004400-0x000044FF RAGE XL PCI (Microsoft Corporation) OK
0x00000020-0x00000021 Motherboard resources OK

0x00000020-0x00000021 Programmable interrupt controller OK
0x00000050-0x00000051 Motherboard resources OK

0x00000092-0x00000092 Motherboard resources OK

0x000000A0-0x000000A1 Motherboard resources OK

0x000000A0-0x000000A1 Programmable interrupt controller OK
0x000000F0-0x000000F1 Motherboard resources OK

0x00000230-0x00000233 Motherboard resources OK

0x00000260-0x00000267 Motherboard resources OK

0x000004D0-0x000004D1 Motherboard resources OK

0x00000800-0x0000081F Motherboard resources OK

0x00000900-0x00000903 Motherboard resources OK

0x00000904-0x00000907 Motherboard resources OK

0x00000908-0x0000090B Motherboard resources OK

0x0000090C-0x0000092E Motherboard resources OK

0x0000092F-0x0000092F Motherboard resources OK

0x00000930-0x000009FF Motherboard resources OK

0x00000C80-0x00000C87 Motherboard resources OK

0x00000CF9-0x00000CF9 Motherboard resources OK

0x000002F8-0x000002FF Motherboard resources OK

0x00000040-0x00000043 System timer OK
0x00000080-0x0000008F Direct memory access controller OK

0x000000C0-0x000000DF Direct memory access controller OK

0x00000061-0x00000061 System speaker OK
0x00000060-0x00000060 Standard 101/102-Key or Microsoft Natural PS/2 Keyboard OK
0x00000064-0x00000064 Standard 101/102-Key or Microsoft Natural PS/2 Keyboard OK
0x0000002E-0x0000002F Extended IO Bus OK
0x00000220-0x00000223 Extended IO Bus OK
0x00000240-0x0000025F Extended IO Bus OK
0x00000070-0x00000073 Extended IO Bus OK
0x000003F8-0x000003FF Communications Port (COM1) OK

0x000003F2-0x000003F5 Standard floppy disk controller OK

0x000003F7-0x000003F7 Standard floppy disk controller OK

0x00002000-0x0000200F AMD-8111 PCI Bus Master IDE Controller OK
0x000001F0-0x000001F7 Primary IDE Channel OK
0x000003F6-0x000003F6 Primary IDE Channel OK
0x00005000-0x00005FFF PCI standard PCI-to-PCI bridge OK

0x00005000-0x00005FFF Smart Array 5i OK
0x00006000-0x00006FFF PCI standard PCI-to-PCI bridge OK

0x00006000-0x00006FFF Smart Array P600 Controller OK

0x00006400-0x000064FF Smart Array P600 Controller OK

0x00007000-0x0000AFFF PCI bus OK
0x00007000-0x0000AFFF PCI standard PCI-to-PCI bridge OK

0x00007000-0x0000AFFF Smart Array P600 Controller OK

0x00008000-0x00008FFF PCI standard PCI-to-PCI bridge OK

0x00008000-0x00008FFF Smart Array P600 Controller OK

0x00009000-0x00009FFF PCI standard PCI-to-PCI bridge OK

0x00009000-0x00009FFF Smart Array P600 Controller OK

© 2006 Hewlett-Packard Company. All rights reserved.

0x00009400-0x000094FF Smart Array P600 Controller OK

0x0000A000-0x0000AFFF PCI standard PCI-to-PCI bridge OK

0x0000A000-0x0000AFFF Smart Array P600 Controller OK

0x0000A400-0x0000A4FF Smart Array P600 Controller OK

[IRQs]

Resource Device Status
IRQ 9 Microsoft ACPI-Compliant System OK
IRQ 19 AMD PCI to USB Open Host Controller OK
IRQ 19 AMD PCI to USB Open Host Controller OK
IRQ 7 Base System Device OK
IRQ 10 Base System Device OK
IRQ 0 System timer OK
IRQ 1 Standard 101/102-Key or Microsoft Natural PS/2 Keyboard OK
IRQ 12 PS/2 Compatible Mouse OK
IRQ 4 Communications Port (COM1) OK
IRQ 6 Standard floppy disk controller OK
IRQ 14 Primary IDE Channel OK
IRQ 18 Smart Array 5i OK
IRQ 25 Broadcom NetXtreme Gigabit Ethernet #2 OK
IRQ 28 Smart Array P600 Controller OK
IRQ 30 Smart Array P600 Controller OK
IRQ 32 Smart Array P600 Controller OK
IRQ 36 Smart Array P600 Controller OK
IRQ 40 Smart Array P600 Controller OK
IRQ 42 Smart Array P600 Controller OK
IRQ 44 Smart Array P600 Controller OK
IRQ 46 Smart Array P600 Controller OK

[Memory]

Resource Device Status
0xA0000-0xBFFFF PCI bus OK
0xA0000-0xBFFFF PCI standard PCI-to-PCI bridge OK
0xA0000-0xBFFFF RAGE XL PCI (Microsoft Corporation) OK

0xF5E00000-0xF5EFFFFF PCI bus OK
0xF5E00000-0xF5EFFFFF PCI standard PCI-to-PCI bridge OK

0xF5F00000-0xF7BFFFFF PCI bus OK
0xF5F00000-0xF7BFFFFF PCI standard PCI-to-PCI bridge OK

0xF79F0000-0xF79F0FFF AMD PCI to USB Open Host Controller OK
0xF79E0000-0xF79E0FFF AMD PCI to USB Open Host Controller OK
0xF79B0000-0xF79B01FF Base System Device OK
0xF79A0000-0xF79A07FF Base System Device OK
0xF7990000-0xF7991FFF Base System Device OK
0xF7900000-0xF797FFFF Base System Device OK
0xF6000000-0xF6FFFFFF RAGE XL PCI (Microsoft Corporation) OK
0xF5FF0000-0xF5FF0FFF RAGE XL PCI (Microsoft Corporation) OK
0xF7A00000-0xF7AFFFFF PCI standard PCI-to-PCI bridge OK

0xF7AC0000-0xF7AFFFFF Smart Array 5i OK
0xF5EF0000-0xF5EF3FFF Smart Array 5i OK
0xF7AB0000-0xF7ABFFFF Broadcom NetXtreme Gigabit Ethernet #2 OK
0xF7B00000-0xF7BFFFFF PCI standard PCI-to-PCI bridge OK

0xF7B00000-0xF7BFFFFF Smart Array P600 Controller OK

0xF7BF0000-0xF7BF1FFF Smart Array P600 Controller OK

0xF7B80000-0xF7BBFFFF Smart Array P600 Controller OK

0xF7B70000-0xF7B71FFF Smart Array P600 Controller OK

0xF7C00000-0xF7FFFFFF PCI bus OK
0xF7C00000-0xF7FFFFFF PCI standard PCI-to-PCI bridge OK

0xF7CF0000-0xF7CF1FFF Smart Array P600 Controller OK

0xF7C80000-0xF7CBFFFF Smart Array P600 Controller OK

0xF7D00000-0xF7DFFFFF PCI standard PCI-to-PCI bridge OK

0xF7DF0000-0xF7DF1FFF Smart Array P600 Controller OK

0xF7D80000-0xF7DBFFFF Smart Array P600 Controller OK

0xF7E00000-0xF7EFFFFF PCI standard PCI-to-PCI bridge OK

0xF7E00000-0xF7EFFFFF Smart Array P600 Controller OK

0xF7EF0000-0xF7EF1FFF Smart Array P600 Controller OK

0xF7E80000-0xF7EBFFFF Smart Array P600 Controller OK

0xF7E70000-0xF7E71FFF Smart Array P600 Controller OK

0xF7F00000-0xF7FFFFFF PCI standard PCI-to-PCI bridge OK

0xF7F00000-0xF7FFFFFF Smart Array P600 Controller OK

0xF7FF0000-0xF7FF1FFF Smart Array P600 Controller OK

0xF7F80000-0xF7FBFFFF Smart Array P600 Controller OK

0xF7F70000-0xF7F71FFF Smart Array P600 Controller OK

[Components]

[Multimedia]

[Audio Codecs]

CODEC Manufacturer Description Status File Version Size Creation Date
c:\windows\system32\tssoft32.acm DSP GROUP, INC. OK C:\WINDOWS\system32\TSSOFT32.ACM 1.01 13.50 KB (13,824 bytes) 3/25/2005 6:00 AM
c:\windows\system32\imaadp32.acm Microsoft Corporation OK C:\WINDOWS\system32\IMAADP32.ACM5.2.3790.1830 (srv03_sp1_rtm.050324-1447) 24.00 KB (24,576 bytes) 3/25/2005 6:00 AM
c:\windows\system32\msgsm32.acm Microsoft Corporation OK C:\WINDOWS\system32\MSGSM32.ACM 5.2.3790.1830 (srv03_sp1_rtm.050324-1447) 34.50 KB (35,328 bytes) 3/25/2005 6:00 AM
c:\windows\system32\msadp32.acm Microsoft Corporation OK C:\WINDOWS\system32\MSADP32.ACM 5.2.3790.1830 (srv03_sp1_rtm.050324-1447) 23.50 KB (24,064 bytes) 3/25/2005 6:00 AM

© 2006 Hewlett-Packard Company. All rights reserved.

c:\windows\system32\msg711.acm Microsoft Corporation
OK C:\WINDOWS\system32\MSG711.ACM
5.2.3790.1830 (srv03_sp1_rtm.050324-1447) 13.50 KB
(13,824 bytes) 3/25/2005 6:00 AM

[Video Codecs]

CODEC Manufacturer Description Status File
Version Size Creation Date
c:\windows\system32\iyuv_32.dll Microsoft Corporation
OK C:\WINDOWS\system32\IYUV_32.DLL
5.2.3790.1830 (srv03_sp1_rtm.050324-1447) 52.50 KB
(53,760 bytes) 3/24/2005 11:19 AM
c:\windows\system32\msrle32.dllMicrosoft Corporation
OK C:\WINDOWS\system32\MSRLE32.DLL
5.2.3790.1830 (srv03_sp1_rtm.050324-1447) 15.50 KB
(15,872 bytes) 3/25/2005 6:00 AM
c:\windows\system32\msvidc32.dll Microsoft Corporation
OK
C:\WINDOWS\system32\MSVIDC32.DLL 5.2.3790.1830
(srv03_sp1_rtm.050324-1447) 43.00 KB (44,032 bytes)
3/25/2005 6:00 AM
c:\windows\system32\msyuv.dll Microsoft Corporation
OK C:\WINDOWS\system32\MSYUV.DLL
5.2.3790.1830 (srv03_sp1_rtm.050324-1447) 21.00 KB
(21,504 bytes) 3/24/2005 11:21 AM
c:\windows\system32\tsbyuv.dll Microsoft Corporation
OK C:\WINDOWS\system32\TSBYUV.DLL
5.2.3790.1830 (srv03_sp1_rtm.050324-1447) 12.50 KB
(12,800 bytes) 3/24/2005 11:34 AM

[CD-ROM]

Item Value
Drive D:
Description CD-ROM Drive
Media Loaded No
Media Type CD-ROM
Name COMPAQ CD-ROM SN-124
Manufacturer (Standard CD-ROM drives)
Status OK
Transfer Rate Not Available
SCSI Target ID 0
PNP Device ID IDE\CDROMCOMPAQ_CD-ROM_SN-
124_____N104____\5&2DC47F1C&0&0.0.0
Driver c:\windows\system32\drivers\cdrom.sys (5.2.3790.1830
(srv03_sp1_rtm.050324-1447), 75.50 KB (77,312 bytes), 3/25/2005 6:00
AM)

[Sound Device]

Item Value

[Display]

Item Value
Name RAGE XL PCI (Microsoft Corporation)
PNP Device ID
PCI\VEN_1002&DEV_4752&SUBSYS_001E0E11&REV_27\4
&12365AD0&0&1818
Adapter Type ATI RAGE XL PCI (B41), ATI Technologies, Inc.
compatible
Adapter Description RAGE XL PCI (Microsoft Corporation)
Adapter RAM 8.00 MB (8,388,608 bytes)
Installed Drivers ati2drad.dll
Driver Version 6.14.3655.6024
INF File atiixpad.inf (ati2mpad section)
Color Planes 1
Color Table Entries 65536
Resolution 800 x 600 x 60 hertz
Bits/Pixel 16
Memory Address 0xF6000000-0xF6FFFFFF
I/O Port 0x00004400-0x000044FF
Memory Address 0xF5FF0000-0xF5FF0FFF
I/O Port 0x000003B0-0x000003BB
I/O Port 0x000003C0-0x000003DF
Memory Address 0xA0000-0xBFFFF
Driver c:\windows\system32\drivers\ati2mpad.sys (6.14.3655.6024,
318.75 KB (326,400 bytes), 7/18/2005 10:55 AM)

[Infrared]

Item Value

[Input]

[Keyboard]

Item Value
Description Standard 101/102-Key or Microsoft Natural PS/2
Keyboard
Name Enhanced (101- or 102-key)
Layout 00000409
PNP Device ID ACPI\PNP0303\4&1C7DEDE8&0
Number of Function Keys 12
I/O Port 0x00000060-0x00000060
I/O Port 0x00000064-0x00000064
IRQ Channel IRQ 1
Driver c:\windows\system32\drivers\i8042prt.sys (5.2.3790.1830
(srv03_sp1_rtm.050324-1447), 91.00 KB (93,184 bytes), 3/25/2005 6:00
AM)

[Pointing Device]

Item Value
Hardware Type PS/2 Compatible Mouse
Number of Buttons 5
Status OK
PNP Device ID ACPI\PNP0F13\4&1C7DEDE8&0
Power Management Supported No
Double Click Threshold 6
Handedness Right Handed Operation
IRQ Channel IRQ 12
Driver c:\windows\system32\drivers\i8042prt.sys (5.2.3790.1830
(srv03_sp1_rtm.050324-1447), 91.00 KB (93,184 bytes), 3/25/2005 6:00
AM)

[Modem]

Item Value

[Network]

[Adapter]

Item Value
Name [00000001] Broadcom NetXtreme Gigabit Ethernet
Adapter Type Not Available
Product Type Broadcom NetXtreme Gigabit Ethernet
Installed Yes
PNP Device ID
PCI\VEN_14E4&DEV_1648&SUBSYS_00D00E11&REV_10\4
&82820FC&0&3138
Last Reset 10/26/2005 9:29 AM
Index 1
Service Name b57nd

© 2006 Hewlett-Packard Company. All rights reserved.

IP Address Not Available
IP Subnet Not Available
Default IP Gateway Not Available
DHCP Enabled No
DHCP Server Not Available
DHCP Lease Expires Not Available
DHCP Lease Obtained Not Available
MAC Address Not Available
Driver c:\windows\system32\drivers\b57amd64.sys (7.98.0.0 built by: WinDDK, 187.00 KB (191,488 bytes), 7/18/2005 10:56 AM)

Name [00000002] Broadcom NetXtreme Gigabit Ethernet
Adapter Type Ethernet 802.3
Product Type Broadcom NetXtreme Gigabit Ethernet
Installed Yes
PNP Device ID PCI\VEN_14E4&DEV_1648&SUBSYS_00D00E11&REV_10\4&82820FC&0&3038
Last Reset 10/26/2005 9:29 AM
Index 2
Service Name b57nd
IP Address 130.168.211.15
IP Subnet 255.255.0.0
Default IP Gateway Not Available
DHCP Enabled No
DHCP Server Not Available
DHCP Lease Expires Not Available
DHCP Lease Obtained Not Available
MAC Address 00:0E:7F:B0:AC:95
Memory Address 0xF7AB0000-0xF7ABFFFF
IRQ Channel IRQ 25
Driver c:\windows\system32\drivers\b57amd64.sys (7.98.0.0 built by: WinDDK, 187.00 KB (191,488 bytes), 7/18/2005 10:56 AM)

Name [00000003] RAS Async Adapter
Adapter Type Not Available
Product Type RAS Async Adapter
Installed Yes
PNP Device ID Not Available
Last Reset 10/26/2005 9:29 AM
Index 3
Service Name AsyncMac
IP Address Not Available
IP Subnet Not Available
Default IP Gateway Not Available
DHCP Enabled No
DHCP Server Not Available
DHCP Lease Expires Not Available
DHCP Lease Obtained Not Available
MAC Address Not Available

Name [00000004] WAN Miniport (L2TP)
Adapter Type Not Available
Product Type WAN Miniport (L2TP)
Installed Yes
PNP Device ID ROOT\MS_L2TPMINIPORT\0000
Last Reset 10/26/2005 9:29 AM
Index 4
Service Name Rasl2tp
IP Address Not Available
IP Subnet Not Available
Default IP Gateway Not Available
DHCP Enabled No
DHCP Server Not Available
DHCP Lease Expires Not Available
DHCP Lease Obtained Not Available
MAC Address Not Available
Driver c:\windows\system32\drivers\rasl2tp.sys (5.2.3790.1830 (srv03_sp1_rtm.050324-1447), 132.00 KB (135,168 bytes), 3/25/2005 6:00 AM)

Name [00000005] WAN Miniport (PPTP)
Adapter Type Wide Area Network (WAN)
Product Type WAN Miniport (PPTP)
Installed Yes
PNP Device ID ROOT\MS_PPTPMINIPORT\0000
Last Reset 10/26/2005 9:29 AM
Index 5
Service Name PptpMiniport
IP Address Not Available
IP Subnet Not Available
Default IP Gateway Not Available
DHCP Enabled No
DHCP Server Not Available
DHCP Lease Expires Not Available
DHCP Lease Obtained Not Available
MAC Address 50:50:54:50:30:30
Driver c:\windows\system32\drivers\raspptp.sys (5.2.3790.1830 (srv03_sp1_rtm.050324-1447), 117.50 KB (120,320 bytes), 3/25/2005 6:00 AM)

Name [00000006] WAN Miniport (PPPOE)
Adapter Type Wide Area Network (WAN)
Product Type WAN Miniport (PPPOE)
Installed Yes
PNP Device ID ROOT\MS_PPPOEMINIPORT\0000
Last Reset 10/26/2005 9:29 AM
Index 6
Service Name RasPppoe
IP Address Not Available
IP Subnet Not Available
Default IP Gateway Not Available
DHCP Enabled No
DHCP Server Not Available
DHCP Lease Expires Not Available
DHCP Lease Obtained Not Available
MAC Address 33:50:6F:45:30:30
Driver c:\windows\system32\drivers\raspppoe.sys (5.2.3790.1830 (srv03_sp1_rtm.050324-1447), 67.50 KB (69,120 bytes), 3/25/2005 6:00 AM)

Name [00000007] Direct Parallel
Adapter Type Not Available
Product Type Direct Parallel
Installed Yes
PNP Device ID ROOT\MS_PTIMINIPORT\0000
Last Reset 10/26/2005 9:29 AM
Index 7
Service Name Raspti
IP Address Not Available
IP Subnet Not Available
Default IP Gateway Not Available
DHCP Enabled No
DHCP Server Not Available
DHCP Lease Expires Not Available
DHCP Lease Obtained Not Available
MAC Address Not Available
Driver c:\windows\system32\drivers\raspti.sys (5.2.3790.1830 (srv03_sp1_rtm.050324-1447), 30.50 KB (31,232 bytes), 3/25/2005 6:00 AM)

Name [00000008] WAN Miniport (IP)
Adapter Type Not Available
Product Type WAN Miniport (IP)
Installed Yes
PNP Device ID ROOT\MS_NDISWANIP\0000
Last Reset 10/26/2005 9:29 AM
Index 8
Service Name NdisWan
IP Address Not Available

© 2006 Hewlett-Packard Company. All rights reserved.

IP Subnet Not Available
Default IP Gateway Not Available
DHCP Enabled No
DHCP Server Not Available
DHCP Lease Expires Not Available
DHCP Lease Obtained Not Available
MAC Address Not Available
Driver c:\windows\system32\drivers\ndiswan.sys (5.2.3790.1830 (srv03_sp1_rtm.050324-1447), 157.50 KB (161,280 bytes), 3/25/2005 6:00 AM)

[Protocol]

Item Value
Name MSAFD Tcpip [TCP/IP]
Connectionless Service No
Guarantees Delivery Yes
Guarantees Sequencing Yes
Maximum Address Size 16 bytes
Maximum Message Size 0 bytes
Message Oriented No
Minimum Address Size 16 bytes
Pseudo Stream Oriented No
Supports Broadcasting No
Supports Connect Data No
Supports Disconnect Data No
Supports Encryption No
Supports Expedited Data Yes
Supports Graceful Closing Yes
Supports Guaranteed Bandwidth No
Supports Multicasting No

Name MSAFD Tcpip [UDP/IP]
Connectionless Service Yes
Guarantees Delivery No
Guarantees Sequencing No
Maximum Address Size 16 bytes
Maximum Message Size 63.93 KB (65,467 bytes)
Message Oriented Yes
Minimum Address Size 16 bytes
Pseudo Stream Oriented No
Supports Broadcasting Yes
Supports Connect Data No
Supports Disconnect Data No
Supports Encryption No
Supports Expedited Data No
Supports Graceful Closing No
Supports Guaranteed Bandwidth No
Supports Multicasting Yes

Name RSVP UDP Service Provider
Connectionless Service Yes
Guarantees Delivery No
Guarantees Sequencing No
Maximum Address Size 16 bytes
Maximum Message Size 63.93 KB (65,467 bytes)
Message Oriented Yes
Minimum Address Size 16 bytes
Pseudo Stream Oriented No
Supports Broadcasting Yes
Supports Connect Data No
Supports Disconnect Data No
Supports Encryption Yes
Supports Expedited Data No
Supports Graceful Closing No
Supports Guaranteed Bandwidth No
Supports Multicasting Yes

Name RSVP TCP Service Provider
Connectionless Service No
Guarantees Delivery Yes
Guarantees Sequencing Yes
Maximum Address Size 16 bytes
Maximum Message Size 0 bytes
Message Oriented No
Minimum Address Size 16 bytes
Pseudo Stream Oriented No
Supports Broadcasting No
Supports Connect Data No
Supports Disconnect Data No
Supports Encryption Yes
Supports Expedited Data Yes
Supports Graceful Closing Yes
Supports Guaranteed Bandwidth No
Supports Multicasting No

[WinSock]

Item Value
File c:\windows\system32\wsock32.dll
Size 24.50 KB (25,088 bytes)
Version 5.2.3790.1830 (srv03_sp1_rtm.050324-1447)

[Ports]

[Serial]

Item Value
Name Communications Port (COM1)
Status OK
PNP Device ID ACPI\PNP0501\0
Maximum Input Buffer Size 0
Maximum Output Buffer Size No
Settable Baud Rate Yes
Settable Data Bits Yes
Settable Flow Control Yes
Settable Parity Yes
Settable Parity Check Yes
Settable Stop Bits Yes
Settable RLSD Yes
Supports RLSD Yes
Supports 16 Bit Mode No
Supports Special Characters No
Baud Rate 9600
Bits/Byte 8
Stop Bits 1
Parity None
Busy No
Abort Read/Write on Error No
Binary Mode Enabled Yes
Continue XMit on XOff No
CTS Outflow Control No
Discard NULL Bytes No
DSR Outflow Control 0
DSR Sensitivity 0
DTR Flow Control Type Enable
EOF Character 0
Error Replace Character 0
Error Replacement Enabled No
Event Character 0
Parity Check Enabled No
RTS Flow Control Type Enable
XOff Character 19
XOffXMit Threshold 512
XOn Character 17
XOnXMit Threshold 2048
XOnXOff InFlow Control 0
XOnXOff OutFlow Control 0

© 2006 Hewlett-Packard Company. All rights reserved.

IRQ Channel IRQ 4
I/O Port 0x000003F8-0x000003FF
Driver c:\windows\system32\drivers\serial.sys (5.2.3790.1830 (srv03_sp1_rtm.050324-1447), 118.50 KB (121,344 bytes), 3/25/2005 6:00 AM)

[Parallel]

Item Value

[Storage]

[Drives]

Item Value
Drive A:
Description 3 1/2 Inch Floppy Drive

Drive C:
Description Local Fixed Disk
Compressed No
File System NTFS
Size 33.91 GB (36,410,552,320 bytes)
Free Space 10.91 GB (11,716,734,976 bytes)
Volume Name
Volume Serial Number 68ED1DA5

Drive D:
Description CD-ROM Disc

Drive Z:
Description Local Fixed Disk
Compressed No
File System NTFS
Size 781.23 GB (838,844,018,688 bytes)
Free Space 501.20 GB (538,155,806,720 bytes)
Volume Name New Volume
Volume Serial Number AC3DE159

[Disks]

Item Value
Description Disk drive
Manufacturer (Standard disk drives)
Model COMPAQ LOGICAL VOLUME SCSI Disk Device
Bytes/Sector 512
Media Loaded Yes
Media Type Fixed hard disk
Partitions 1
SCSI Bus 0
SCSI Logical Unit 0
SCSI Port 2
SCSI Target ID 4
Sectors/Track 32
Size 25.39 GB (27,260,928,000 bytes)
Total Cylinders 6,525
Total Sectors 53,244,000
Total Tracks 1,663,875
Tracks/Cylinder 255
Partition Disk #4, Partition #0
Partition Size 25.39 GB (27,259,830,272 bytes)
Partition Starting Offset 65,536 bytes

Description Disk drive
Manufacturer (Standard disk drives)
Model COMPAQ LOGICAL VOLUME SCSI Disk Device
Bytes/Sector 512
Media Loaded Yes
Media Type Fixed hard disk
Partitions 1
SCSI Bus 0
SCSI Logical Unit 0
SCSI Port 2
SCSI Target ID 5
Sectors/Track 32
Size 12.69 GB (13,628,375,040 bytes)
Total Cylinders 3,262
Total Sectors 26,617,920
Total Tracks 831,810
Tracks/Cylinder 255
Partition Disk #5, Partition #0
Partition Size 12.69 GB (13,627,293,696 bytes)
Partition Starting Offset 65,536 bytes

Description Disk drive
Manufacturer (Standard disk drives)
Model COMPAQ LOGICAL VOLUME SCSI Disk Device
Bytes/Sector 512
Media Loaded Yes
Media Type Fixed hard disk
Partitions 1
SCSI Bus 0
SCSI Logical Unit 0
SCSI Port 2
SCSI Target ID 6
Sectors/Track 32
Size 97.66 GB (104,857,436,160 bytes)
Total Cylinders 25,098
Total Sectors 204,799,680
Total Tracks 6,399,990
Tracks/Cylinder 255
Partition Disk #6, Partition #0
Partition Size 97.66 GB (104,857,419,776 bytes)
Partition Starting Offset 16,384 bytes

Description Disk drive
Manufacturer (Standard disk drives)
Model COMPAQ LOGICAL VOLUME SCSI Disk Device
Bytes/Sector 512
Media Loaded Yes
Media Type Fixed hard disk
Partitions 1
SCSI Bus 0
SCSI Logical Unit 0
SCSI Port 2
SCSI Target ID 7
Sectors/Track 32
Size 5.86 GB (6,291,947,520 bytes)
Total Cylinders 1,506
Total Sectors 12,288,960
Total Tracks 384,030
Tracks/Cylinder 255
Partition Disk #7, Partition #0
Partition Size 5.85 GB (6,283,067,392 bytes)
Partition Starting Offset 65,536 bytes

Description Disk drive
Manufacturer (Standard disk drives)
Model COMPAQ LOGICAL VOLUME SCSI Disk Device
Bytes/Sector 512
Media Loaded Yes
Media Type Fixed hard disk
Partitions 1
SCSI Bus 0
SCSI Logical Unit 0
SCSI Port 4
SCSI Target ID 4
Sectors/Track 63

© 2006 Hewlett-Packard Company. All rights reserved.

Size 25.39 GB (27,258,577,920 bytes)
Total Cylinders 3,314
Total Sectors 53,239,410
Total Tracks 845,070
Tracks/Cylinder 255
Partition Disk #11, Partition #0
Partition Size 25.39 GB (27,259,830,272 bytes)
Partition Starting Offset 65,536 bytes

Description Disk drive
Manufacturer (Standard disk drives)
Model COMPAQ LOGICAL VOLUME SCSI Disk Device
Bytes/Sector 512
Media Loaded Yes
Media Type Fixed hard disk
Partitions 1
SCSI Bus 0
SCSI Logical Unit 0
SCSI Port 4
SCSI Target ID 5
Sectors/Track 63
Size 12.69 GB (13,621,063,680 bytes)
Total Cylinders 1,656
Total Sectors 26,603,640
Total Tracks 422,280
Tracks/Cylinder 255
Partition Disk #12, Partition #0
Partition Size 12.69 GB (13,627,293,696 bytes)
Partition Starting Offset 65,536 bytes

Description Disk drive
Manufacturer (Standard disk drives)
Model COMPAQ LOGICAL VOLUME SCSI Disk Device
Bytes/Sector 512
Media Loaded Yes
Media Type Fixed hard disk
Partitions 1
SCSI Bus 0
SCSI Logical Unit 0
SCSI Port 4
SCSI Target ID 6
Sectors/Track 63
Size 97.65 GB (104,855,869,440 bytes)
Total Cylinders 12,748
Total Sectors 204,796,620
Total Tracks 3,250,740
Tracks/Cylinder 255
Partition Disk #13, Partition #0
Partition Size 97.65 GB (104,855,837,184 bytes)
Partition Starting Offset 32,256 bytes

Description Disk drive
Manufacturer (Standard disk drives)
Model COMPAQ LOGICAL VOLUME SCSI Disk Device
Bytes/Sector 512
Media Loaded Yes
Media Type Fixed hard disk
Partitions 1
SCSI Bus 0
SCSI Logical Unit 0
SCSI Port 9
SCSI Target ID 4
Sectors/Track 63
Size 25.39 GB (27,258,577,920 bytes)
Total Cylinders 3,314
Total Sectors 53,239,410
Total Tracks 845,070
Tracks/Cylinder 255
Partition Disk #26, Partition #0
Partition Size 25.39 GB (27,257,733,120 bytes)
Partition Starting Offset 65,536 bytes

Description Disk drive
Manufacturer (Standard disk drives)
Model COMPAQ LOGICAL VOLUME SCSI Disk Device
Bytes/Sector 512
Media Loaded Yes
Media Type Fixed hard disk
Partitions 1
SCSI Bus 0
SCSI Logical Unit 0
SCSI Port 9
SCSI Target ID 5
Sectors/Track 63
Size 12.69 GB (13,621,063,680 bytes)
Total Cylinders 1,656
Total Sectors 26,603,640
Total Tracks 422,280
Tracks/Cylinder 255
Partition Disk #27, Partition #0
Partition Size 12.68 GB (13,619,953,664 bytes)
Partition Starting Offset 65,536 bytes

Description Disk drive
Manufacturer (Standard disk drives)
Model COMPAQ LOGICAL VOLUME SCSI Disk Device
Bytes/Sector 512
Media Loaded Yes
Media Type Fixed hard disk
Partitions 1
SCSI Bus 0
SCSI Logical Unit 0
SCSI Port 9
SCSI Target ID 6
Sectors/Track 63
Size 97.65 GB (104,855,869,440 bytes)
Total Cylinders 12,748
Total Sectors 204,796,620
Total Tracks 3,250,740
Tracks/Cylinder 255
Partition Disk #28, Partition #0
Partition Size 97.65 GB (104,855,837,184 bytes)
Partition Starting Offset 32,256 bytes

Description Disk drive
Manufacturer (Standard disk drives)
Model COMPAQ LOGICAL VOLUME SCSI Disk Device
Bytes/Sector 512
Media Loaded Yes
Media Type Fixed hard disk
Partitions 1
SCSI Bus 0
SCSI Logical Unit 0
SCSI Port 7
SCSI Target ID 4
Sectors/Track 63
Size 25.39 GB (27,258,577,920 bytes)
Total Cylinders 3,314
Total Sectors 53,239,410
Total Tracks 845,070
Tracks/Cylinder 255
Partition Disk #20, Partition #0
Partition Size 25.39 GB (27,257,733,120 bytes)
Partition Starting Offset 65,536 bytes

Description Disk drive
Manufacturer (Standard disk drives)
Model COMPAQ LOGICAL VOLUME SCSI Disk Device
Bytes/Sector 512
Media Loaded Yes

© 2006 Hewlett-Packard Company. All rights reserved.

Media Type Fixed hard disk
Partitions 1
SCSI Bus 0
SCSI Logical Unit 0
SCSI Port 7
SCSI Target ID 5
Sectors/Track 63
Size 12.69 GB (13,621,063,680 bytes)
Total Cylinders 1,656
Total Sectors 26,603,640
Total Tracks 422,280
Tracks/Cylinder 255
Partition Disk #21, Partition #0
Partition Size 12.68 GB (13,619,953,664 bytes)
Partition Starting Offset 65,536 bytes

Description Disk drive
Manufacturer (Standard disk drives)
Model COMPAQ LOGICAL VOLUME SCSI Disk Device
Bytes/Sector 512
Media Loaded Yes
Media Type Fixed hard disk
Partitions 1
SCSI Bus 0
SCSI Logical Unit 0
SCSI Port 7
SCSI Target ID 6
Sectors/Track 63
Size 97.65 GB (104,855,869,440 bytes)
Total Cylinders 12,748
Total Sectors 204,796,620
Total Tracks 3,250,740
Tracks/Cylinder 255
Partition Disk #22, Partition #0
Partition Size 97.65 GB (104,855,837,184 bytes)
Partition Starting Offset 32,256 bytes

Description Disk drive
Manufacturer (Standard disk drives)
Model COMPAQ LOGICAL VOLUME SCSI Disk Device
Bytes/Sector 512
Media Loaded Yes
Media Type Fixed hard disk
Partitions 1
SCSI Bus 0
SCSI Logical Unit 0
SCSI Port 3
SCSI Target ID 4
Sectors/Track 63
Size 25.39 GB (27,258,577,920 bytes)
Total Cylinders 3,314
Total Sectors 53,239,410
Total Tracks 845,070
Tracks/Cylinder 255
Partition Disk #8, Partition #0
Partition Size 25.39 GB (27,257,733,120 bytes)
Partition Starting Offset 65,536 bytes

Description Disk drive
Manufacturer (Standard disk drives)
Model COMPAQ LOGICAL VOLUME SCSI Disk Device
Bytes/Sector 512
Media Loaded Yes
Media Type Fixed hard disk
Partitions 1
SCSI Bus 0
SCSI Logical Unit 0
SCSI Port 3
SCSI Target ID 5
Sectors/Track 63
Size 12.69 GB (13,621,063,680 bytes)
Total Cylinders 1,656
Total Sectors 26,603,640
Total Tracks 422,280
Tracks/Cylinder 255
Partition Disk #9, Partition #0
Partition Size 12.68 GB (13,619,953,664 bytes)
Partition Starting Offset 65,536 bytes

Description Disk drive
Manufacturer (Standard disk drives)
Model COMPAQ LOGICAL VOLUME SCSI Disk Device
Bytes/Sector 512
Media Loaded Yes
Media Type Fixed hard disk
Partitions 1
SCSI Bus 0
SCSI Logical Unit 0
SCSI Port 3
SCSI Target ID 6
Sectors/Track 63
Size 97.65 GB (104,855,869,440 bytes)
Total Cylinders 12,748
Total Sectors 204,796,620
Total Tracks 3,250,740
Tracks/Cylinder 255
Partition Disk #10, Partition #0
Partition Size 97.65 GB (104,855,837,184 bytes)
Partition Starting Offset 32,256 bytes

Description Disk drive
Manufacturer (Standard disk drives)
Model COMPAQ LOGICAL VOLUME SCSI Disk Device
Bytes/Sector 512
Media Loaded Yes
Media Type Fixed hard disk
Partitions 1
SCSI Bus 0
SCSI Logical Unit 0
SCSI Port 5
SCSI Target ID 4
Sectors/Track 63
Size 25.39 GB (27,258,577,920 bytes)
Total Cylinders 3,314
Total Sectors 53,239,410
Total Tracks 845,070
Tracks/Cylinder 255
Partition Disk #14, Partition #0
Partition Size 25.39 GB (27,257,733,120 bytes)
Partition Starting Offset 65,536 bytes

Description Disk drive
Manufacturer (Standard disk drives)
Model COMPAQ LOGICAL VOLUME SCSI Disk Device
Bytes/Sector 512
Media Loaded Yes
Media Type Fixed hard disk
Partitions 1
SCSI Bus 0
SCSI Logical Unit 0
SCSI Port 5
SCSI Target ID 5
Sectors/Track 63
Size 12.69 GB (13,621,063,680 bytes)
Total Cylinders 1,656
Total Sectors 26,603,640
Total Tracks 422,280
Tracks/Cylinder 255
Partition Disk #15, Partition #0
Partition Size 12.68 GB (13,619,953,664 bytes)

© 2006 Hewlett-Packard Company. All rights reserved.

Partition Starting Offset 65,536 bytes

Description Disk drive
Manufacturer (Standard disk drives)
Model COMPAQ LOGICAL VOLUME SCSI Disk Device
Bytes/Sector 512
Media Loaded Yes
Media Type Fixed hard disk
Partitions 1
SCSI Bus 0
SCSI Logical Unit 0
SCSI Port 5
SCSI Target ID 6
Sectors/Track 63
Size 97.65 GB (104,855,869,440 bytes)
Total Cylinders 12,748
Total Sectors 204,796,620
Total Tracks 3,250,740
Tracks/Cylinder 255
Partition Disk #16, Partition #0
Partition Size 97.65 GB (104,855,837,184 bytes)
Partition Starting Offset 32,256 bytes

Description Disk drive
Manufacturer (Standard disk drives)
Model COMPAQ LOGICAL VOLUME SCSI Disk Device
Bytes/Sector 512
Media Loaded Yes
Media Type Fixed hard disk
Partitions 1
SCSI Bus 0
SCSI Logical Unit 0
SCSI Port 6
SCSI Target ID 4
Sectors/Track 63
Size 25.39 GB (27,258,577,920 bytes)
Total Cylinders 3,314
Total Sectors 53,239,410
Total Tracks 845,070
Tracks/Cylinder 255
Partition Disk #17, Partition #0
Partition Size 25.39 GB (27,257,733,120 bytes)
Partition Starting Offset 65,536 bytes

Description Disk drive
Manufacturer (Standard disk drives)
Model COMPAQ LOGICAL VOLUME SCSI Disk Device
Bytes/Sector 512
Media Loaded Yes
Media Type Fixed hard disk
Partitions 1
SCSI Bus 0
SCSI Logical Unit 0
SCSI Port 6
SCSI Target ID 5
Sectors/Track 63
Size 12.69 GB (13,621,063,680 bytes)
Total Cylinders 1,656
Total Sectors 26,603,640
Total Tracks 422,280
Tracks/Cylinder 255
Partition Disk #18, Partition #0
Partition Size 12.68 GB (13,619,953,664 bytes)
Partition Starting Offset 65,536 bytes

Description Disk drive
Manufacturer (Standard disk drives)
Model COMPAQ LOGICAL VOLUME SCSI Disk Device
Bytes/Sector 512
Media Loaded Yes
Media Type Fixed hard disk
Partitions 1
SCSI Bus 0
SCSI Logical Unit 0
SCSI Port 6
SCSI Target ID 6
Sectors/Track 63
Size 97.65 GB (104,855,869,440 bytes)
Total Cylinders 12,748
Total Sectors 204,796,620
Total Tracks 3,250,740
Tracks/Cylinder 255
Partition Disk #19, Partition #0
Partition Size 97.65 GB (104,855,837,184 bytes)
Partition Starting Offset 32,256 bytes

Description Disk drive
Manufacturer (Standard disk drives)
Model COMPAQ LOGICAL VOLUME SCSI Disk Device
Bytes/Sector 512
Media Loaded Yes
Media Type Fixed hard disk
Partitions 1
SCSI Bus 0
SCSI Logical Unit 0
SCSI Port 8
SCSI Target ID 4
Sectors/Track 63
Size 25.39 GB (27,258,577,920 bytes)
Total Cylinders 3,314
Total Sectors 53,239,410
Total Tracks 845,070
Tracks/Cylinder 255
Partition Disk #23, Partition #0
Partition Size 25.39 GB (27,257,733,120 bytes)
Partition Starting Offset 65,536 bytes

Description Disk drive
Manufacturer (Standard disk drives)
Model COMPAQ LOGICAL VOLUME SCSI Disk Device
Bytes/Sector 512
Media Loaded Yes
Media Type Fixed hard disk
Partitions 1
SCSI Bus 0
SCSI Logical Unit 0
SCSI Port 8
SCSI Target ID 5
Sectors/Track 63
Size 12.69 GB (13,621,063,680 bytes)
Total Cylinders 1,656
Total Sectors 26,603,640
Total Tracks 422,280
Tracks/Cylinder 255
Partition Disk #24, Partition #0
Partition Size 12.68 GB (13,619,953,664 bytes)
Partition Starting Offset 65,536 bytes

Description Disk drive
Manufacturer (Standard disk drives)
Model COMPAQ LOGICAL VOLUME SCSI Disk Device
Bytes/Sector 512
Media Loaded Yes
Media Type Fixed hard disk
Partitions 1
SCSI Bus 0
SCSI Logical Unit 0
SCSI Port 8
SCSI Target ID 6
Sectors/Track 63

© 2006 Hewlett-Packard Company. All rights reserved.

Size 97.65 GB (104,855,869,440 bytes)
Total Cylinders 12,748
Total Sectors 204,796,620
Total Tracks 3,250,740
Tracks/Cylinder 255
Partition Disk #25, Partition #0
Partition Size 97.65 GB (104,855,837,184 bytes)
Partition Starting Offset 32,256 bytes

Description Disk drive
Manufacturer (Standard disk drives)
Model COMPAQ LOGICAL VOLUME SCSI Disk Device
Bytes/Sector 512
Media Loaded Yes
Media Type Fixed hard disk
Partitions 1
SCSI Bus 0
SCSI Logical Unit 0
SCSI Port 1
SCSI Target ID 4
Sectors/Track 32
Size 33.91 GB (36,414,750,720 bytes)
Total Cylinders 8,716
Total Sectors 71,122,560
Total Tracks 2,222,580
Tracks/Cylinder 255
Partition Disk #0, Partition #0
Partition Size 33.91 GB (36,410,556,416 bytes)
Partition Starting Offset 16,384 bytes

Description Disk drive
Manufacturer (Standard disk drives)
Model COMPAQ LOGICAL VOLUME SCSI Disk Device
Bytes/Sector 512
Media Loaded Yes
Media Type Fixed hard disk
Partitions 1
SCSI Bus 0
SCSI Logical Unit 0
SCSI Port 1
SCSI Target ID 5
Sectors/Track 32
Size 19.53 GB (20,968,980,480 bytes)
Total Cylinders 5,019
Total Sectors 40,955,040
Total Tracks 1,279,845
Tracks/Cylinder 255
Partition Disk #1, Partition #0
Partition Size 19.53 GB (20,968,374,272 bytes)
Partition Starting Offset 65,536 bytes

Description Disk drive
Manufacturer (Standard disk drives)
Model COMPAQ LOGICAL VOLUME SCSI Disk Device
Bytes/Sector 512
Media Loaded Yes
Media Type Fixed hard disk
Partitions 1
SCSI Bus 0
SCSI Logical Unit 0
SCSI Port 1
SCSI Target ID 6
Sectors/Track 32
Size 1,000.08 MB (1,048,657,920 bytes)
Total Cylinders 251
Total Sectors 2,048,160
Total Tracks 64,005
Tracks/Cylinder 255
Partition Disk #2, Partition #0
Partition Size 1,000.00 MB (1,048,576,000 bytes)
Partition Starting Offset 65,536 bytes

Description Disk drive
Manufacturer (Standard disk drives)
Model COMPAQ LOGICAL VOLUME SCSI Disk Device
Bytes/Sector 512
Media Loaded Yes
Media Type Fixed hard disk
Partitions 1
SCSI Bus 0
SCSI Logical Unit 0
SCSI Port 1
SCSI Target ID 7
Sectors/Track 32
Size 26.81 GB (28,790,046,720 bytes)
Total Cylinders 6,891
Total Sectors 56,230,560
Total Tracks 1,757,205
Tracks/Cylinder 255
Partition Disk #3, Partition #0
Partition Size 26.81 GB (28,787,605,504 bytes)
Partition Starting Offset 65,536 bytes

[SCSI]

Item Value
Name Smart Array 5i
Manufacturer Compaq
Status OK
PNP Device ID
PCI\VEN_0E11&DEV_B178&SUBSYS_40800E11&REV_01\4&82820FC&0&2038
Memory Address 0xF7AC0000-0xF7AFFFFF
I/O Port 0x00005000-0x00005FFF
Memory Address 0xF5EF0000-0xF5EF3FFF
IRQ Channel IRQ 18
Driver c:\windows\system32\drivers\hpcisss.sys (5.11.0.64 Build 2 (x86-64) (NT.041115-0204), 30.50 KB (31,232 bytes), 3/25/2005 6:00 AM)

Name Smart Array P600 Controller
Manufacturer Hewlett-Packard Company
Status OK
PNP Device ID
PCI\VEN_103C&DEV_3220&SUBSYS_3225103C&REV_00\4&24B9E852&0&3840
Memory Address 0xF7BF0000-0xF7BF1FFF
I/O Port 0x00006000-0x00006FFF
Memory Address 0xF7B80000-0xF7BBFFFF
IRQ Channel IRQ 28
Driver c:\windows\system32\drivers\hpcisss2.sys (5.8.0.64 Build 1 (x86-64) built by: WINBUILD1, 44.00 KB (45,056 bytes), 9/1/2005 9:56 AM)

Name Smart Array P600 Controller
Manufacturer Hewlett-Packard Company
Status OK
PNP Device ID
PCI\VEN_103C&DEV_3220&SUBSYS_3225103C&REV_00\4&24B9E852&0&4040
Memory Address 0xF7B70000-0xF7B71FFF
I/O Port 0x00006400-0x000064FF
Memory Address 0xF7B00000-0xF7BFFFFF
IRQ Channel IRQ 30
Driver c:\windows\system32\drivers\hpcisss2.sys (5.8.0.64 Build 1 (x86-64) built by: WINBUILD1, 44.00 KB (45,056 bytes), 9/1/2005 9:56 AM)

Name Smart Array P600 Controller
Manufacturer Hewlett-Packard Company

© 2006 Hewlett-Packard Company. All rights reserved.

Status OK
PNP Device ID
PCI\VEN_103C&DEV_3220&SUBSYS_3225103C&REV_00\4&25F4D2AC&0&6848
Memory Address 0xF7CF0000-0xF7CF1FFF
I/O Port 0x00007000-0x0000AFFF
Memory Address 0xF7C80000-0xF7CBFFFF
IRQ Channel IRQ 32
Driver c:\windows\system32\drivers\hpcisss2.sys (5.8.0.64 Build 1 (x86-64) built by: WINBUILD1, 44.00 KB (45,056 bytes), 9/1/2005 9:56 AM)

Name Smart Array P600 Controller
Manufacturer Hewlett-Packard Company
Status OK
PNP Device ID
PCI\VEN_103C&DEV_3220&SUBSYS_3225103C&REV_00\4&9630B56&0&7050
Memory Address 0xF7DF0000-0xF7DF1FFF
I/O Port 0x00008000-0x00008FFF
Memory Address 0xF7D80000-0xF7DBFFFF
IRQ Channel IRQ 36
Driver c:\windows\system32\drivers\hpcisss2.sys (5.8.0.64 Build 1 (x86-64) built by: WINBUILD1, 44.00 KB (45,056 bytes), 9/1/2005 9:56 AM)

Name Smart Array P600 Controller
Manufacturer Hewlett-Packard Company
Status OK
PNP Device ID
PCI\VEN_103C&DEV_3220&SUBSYS_3225103C&REV_00\4&2534A57B&0&4858
Memory Address 0xF7EF0000-0xF7EF1FFF
I/O Port 0x00009000-0x00009FFF
Memory Address 0xF7E80000-0xF7EBFFFF
IRQ Channel IRQ 40
Driver c:\windows\system32\drivers\hpcisss2.sys (5.8.0.64 Build 1 (x86-64) built by: WINBUILD1, 44.00 KB (45,056 bytes), 9/1/2005 9:56 AM)

Name Smart Array P600 Controller
Manufacturer Hewlett-Packard Company
Status OK
PNP Device ID
PCI\VEN_103C&DEV_3220&SUBSYS_3225103C&REV_00\4&2534A57B&0&5058
Memory Address 0xF7E70000-0xF7E71FFF
I/O Port 0x00009400-0x000094FF
Memory Address 0xF7E00000-0xF7EFFFFF
IRQ Channel IRQ 42
Driver c:\windows\system32\drivers\hpcisss2.sys (5.8.0.64 Build 1 (x86-64) built by: WINBUILD1, 44.00 KB (45,056 bytes), 9/1/2005 9:56 AM)

Name Smart Array P600 Controller
Manufacturer Hewlett-Packard Company
Status OK
PNP Device ID
PCI\VEN_103C&DEV_3220&SUBSYS_3225103C&REV_00\4&62BA2CA&0&5860
Memory Address 0xF7FF0000-0xF7FF1FFF
I/O Port 0x0000A000-0x0000AFFF
Memory Address 0xF7F80000-0xF7FBFFFF
IRQ Channel IRQ 44
Driver c:\windows\system32\drivers\hpcisss2.sys (5.8.0.64 Build 1 (x86-64) built by: WINBUILD1, 44.00 KB (45,056 bytes), 9/1/2005 9:56 AM)

Name Smart Array P600 Controller
Manufacturer Hewlett-Packard Company
Status OK
PNP Device ID
PCI\VEN_103C&DEV_3220&SUBSYS_3225103C&REV_00\4&62BA2CA&0&6060
Memory Address 0xF7F70000-0xF7F71FFF
I/O Port 0x0000A400-0x0000A4FF
Memory Address 0xF7F00000-0xF7FFFFFF
IRQ Channel IRQ 46
Driver c:\windows\system32\drivers\hpcisss2.sys (5.8.0.64 Build 1 (x86-64) built by: WINBUILD1, 44.00 KB (45,056 bytes), 9/1/2005 9:56 AM)

[IDE]

Item Value
Name AMD-8111 PCI Bus Master IDE Controller
Manufacturer Advanced Micro Devices
Status OK
PNP Device ID
PCI\VEN_1022&DEV_7469&SUBSYS_32040E11&REV_03\3&20FEA912&0&21
I/O Port 0x00002000-0x0000200F
Driver c:\windows\system32\drivers\amdide.sys (5.2.3790.1830 (srv03_sp1_rtm.050324-1447), 8.00 KB (8,192 bytes), 3/25/2005 6:00 AM)

Name Primary IDE Channel
Manufacturer (Standard IDE ATA/ATAPI controllers)
Status OK
PNP Device ID PCIIDE\IDECHANNEL\4&21637DBD&0&0

I/O Port 0x000001F0-0x000001F7
I/O Port 0x000003F6-0x000003F6
IRQ Channel IRQ 14
Driver c:\windows\system32\drivers\atapi.sys (5.2.3790.1830 (srv03_sp1_rtm.050324-1447), 145.00 KB (148,480 bytes), 3/25/2005 6:00 AM)

[Printing]

Name Driver Port Name Server Name

[Problem Devices]

Device PNP Device ID Error Code
Base System Device
PCI\VEN_0E11&DEV_B203&SUBSYS_B2060E11&REV_01\4&12365AD0&0&1018 The drivers for this device are not installed.

Base System Device
PCI\VEN_0E11&DEV_B204&SUBSYS_B2060E11&REV_01\4&12365AD0&0&1218 The drivers for this device are not installed.

Broadcom NetXtreme Gigabit Ethernet
PCI\VEN_14E4&DEV_1648&SUBSYS_00D00E11&REV_10\4&82820FC&0&3138 This device is disabled.

[USB]

Device PNP Device ID
AMD PCI to USB Open Host Controller
PCI\VEN_1022&DEV_7464&SUBSYS_32020E11&REV_0B\4&12365AD0&0&0018
AMD PCI to USB Open Host Controller
PCI\VEN_1022&DEV_7464&SUBSYS_32020E11&REV_0B\4&12365AD0&0&0118

[Software Environment]

© 2006 Hewlett-Packard Company. All rights reserved.

[System Drivers]

Name Description File Type Started Start
Mode State Status Error Control Accept Pause
Accept Stop
abiosdsk Abiosdsk Not Available Kernel Driver No
Disabled Stopped OK Ignore No No

acpi Microsoft ACPI Driver
c:\windows\system32\drivers\acpi.sys Kernel Driver
Yes Boot Running OK Normal No
Yes
acpiec ACPIEC c:\windows\system32\drivers\acpiec.sys Kernel
Driver No Disabled Stopped OK Normal No
No
adpu160m adpu160m Not Available Kernel Driver No
Disabled Stopped OK Normal No No

adpu320 adpu320 Not Available Kernel Driver No
Disabled Stopped OK Normal No No

afd AFD c:\windows\system32\drivers\afd.sys Kernel
Driver Yes System Running OK Normal No
Yes
aic78u2 aic78u2 Not Available Kernel Driver No
Disabled Stopped OK Normal No No

aic78xx aic78xx Not Available Kernel Driver No
Disabled Stopped OK Normal No No

aliide AliIde Not Available Kernel Driver No
Disabled Stopped OK Normal No No

amdide AmdIde c:\windows\system32\drivers\amdide.sys Kernel
Driver Yes Boot Running OK Normal No
Yes
arc arc Not Available Kernel Driver No
Disabled Stopped OK Normal No No

asyncmac RAS Asynchronous Media Driver
c:\windows\system32\drivers\asyncmac.sys Kernel Driver
No Manual Stopped OK Normal No
No
atapi Standard IDE/ESDI Hard Disk Controller
c:\windows\system32\drivers\atapi.sys Kernel Driver
Yes Boot Running OK Normal No
Yes
atdisk Atdisk Not Available Kernel Driver No
Disabled Stopped OK Ignore No No

ati2mpad ati2mpad c:\windows\system32\drivers\ati2mpad.sys Kernel
Driver Yes Manual Running OK Ignore No
Yes
atmarpc ATM ARP Client Protocol
c:\windows\system32\drivers\atmarpc.sys Kernel Driver
No Manual Stopped OK Normal No
No
audstub Audio Stub Driver c:\windows\system32\drivers\audstub.sys
Kernel Driver Yes Manual Running OK
Normal No Yes
b57nd Broadcom NetXtreme Gigabit Ethernet
c:\windows\system32\drivers\b57amd64.sys Kernel Driver
Yes Manual Running OK Normal No
Yes
beep Beep c:\windows\system32\drivers\beep.sys Kernel
Driver Yes System Running OK Normal No
Yes

cdac15ba CdaC15BA c:\windows\system32\drivers\cdac15ba.sys
Kernel Driver Yes Auto Running OK
Normal No Yes
cdad10ba CdaD10BA c:\windows\system32\drivers\cdad10ba.sys
Kernel Driver Yes Auto Running OK
Normal No Yes
cdfs Cdfs c:\windows\system32\drivers\cdfs.sys File
System Driver Yes Disabled Running OK Normal
No Yes
cdrom CD-ROM Driver c:\windows\system32\drivers\cdrom.sys
Kernel Driver Yes System Running OK
Normal No Yes
changer Changer Not Available Kernel Driver No
System Stopped OK Ignore No No

clusdisk Cluster Disk Driver c:\windows\system32\drivers\clusdisk.sys
Kernel Driver No Disabled Stopped OK
Normal No No
cmdide CmdIde Not Available Kernel Driver No
Disabled Stopped OK Normal No No

cpqcissm cpqcissm Not Available Kernel Driver No
Disabled Stopped OK Normal No No

crcdisk CRC Disk Filter Driver
c:\windows\system32\drivers\crcdisk.sys Kernel Driver
Yes Boot Running OK Normal No
Yes
dfsdriver DfsDriver c:\windows\system32\drivers\dfs.sys File
System Driver Yes Boot Running OK Normal
No Yes
disk Disk Driver c:\windows\system32\drivers\disk.sys
Kernel Driver Yes Boot Running OK
Normal No Yes
dmboot dmboot c:\windows\system32\drivers\dmboot.sys Kernel
Driver Yes Disabled Running OK Normal No
Yes
dmio Logical Disk Manager Driver
c:\windows\system32\drivers\dmio.sys Kernel Driver
Yes Boot Running OK Normal No
Yes
dmload dmload c:\windows\system32\drivers\dmload.sys Kernel
Driver Yes Boot Running OK Normal No
Yes
dpti2o dpti2o Not Available Kernel Driver No
Disabled Stopped OK Normal No No

elxstor elxstor Not Available Kernel Driver No
Disabled Stopped OK Normal No No

fastfat Fastfat c:\windows\system32\drivers\fastfat.sys File
System Driver No Disabled Stopped OK Normal
No No
fdc Floppy Disk Controller Driver
c:\windows\system32\drivers\fdc.sys Kernel Driver
Yes Manual Running OK Normal No
Yes
fips Fips c:\windows\system32\drivers\fips.sys Kernel
Driver Yes System Running OK Normal No
Yes
flpydisk Floppy Disk Driver c:\windows\system32\drivers\flpydisk.sys
Kernel Driver Yes Manual Running OK
Normal No Yes
fltmgr FltMgr c:\windows\system32\drivers\fltmgr.sys File
System Driver Yes Boot Running OK Normal
No Yes
ftdisk Volume Manager Driver
c:\windows\system32\drivers\ftdisk.sys Kernel Driver
Yes Boot Running OK Normal No
Yes

© 2006 Hewlett-Packard Company. All rights reserved.

```
gpc     Generic Packet Classifier
        c:\windows\system32\drivers\msgpc.sys     Kernel Driver
        Yes     Manual    Running   OK        Normal    No
        Yes
hpcisss hpcisss   c:\windows\system32\drivers\hpcisss.sys   Kernel
Driver  Yes     Boot      Running   OK        Normal    No
        Yes
hpcisss2 HpCISSs2 c:\windows\system32\drivers\hpcisss2.sys  Kernel
Driver  Yes     Boot      Running   OK        Normal    No
        Yes
hpqcissb Smart Array Controllers Non-Miniport Bus Driver
        c:\windows\system32\drivers\hpqcissb.sys  Kernel Driver
        Yes     Boot      Running   OK        Normal    No
        Yes
hpqcissd Smart Array Controllers Non-Miniport Disk Driver
        c:\windows\system32\drivers\hpqcissd.sys  Kernel Driver
        Yes     Boot      Running   OK        Normal    No
        Yes
http    HTTP      c:\windows\system32\drivers\http.sys      Kernel
Driver  No      Manual    Stopped   OK        Normal    No
        No
i2omgmt i2omgmt   Not Available     Kernel Driver     No
        System  Stopped   OK        Normal    No        No

i8042prt i8042 Keyboard and PS/2 Mouse Port Driver
        c:\windows\system32\drivers\i8042prt.sys  Kernel Driver
        Yes     System    Running   OK        Normal    No
        Yes
iirsp   iirsp     Not Available     Kernel Driver     No
        Disabled  Stopped   OK        Normal    No        No

imapi   CD-Burning Filter Driver
        c:\windows\system32\drivers\imapi.sys     Kernel Driver
        No      System    Stopped   OK        Normal    No
        No
intelide IntelIde Not Available     Kernel Driver     No
        Disabled  Stopped   OK        Normal    No        No

ip6fw   IPv6 Windows Firewall Driver
        c:\windows\system32\drivers\ip6fw.sys     Kernel Driver
        No      Manual    Stopped   OK        Normal    No
        No
ipfilterdriver    IP Traffic Filter Driver
        c:\windows\system32\drivers\ipfltdrv.sys  Kernel Driver
        No      Manual    Stopped   OK        Normal    No
        No
ipinip  IP in IP Tunnel Driverc:\windows\system32\drivers\ipinip.sys
        Kernel Driver     No        Manual    Stopped   OK
        Normal  No        No
ipnat   IP Network Address Translator
        c:\windows\system32\drivers\ipnat.sys     Kernel Driver
        No      Manual    Stopped   OK        Normal    No
        No
ipsec   IPSEC driver      c:\windows\system32\drivers\ipsec.sys
        Kernel Driver     Yes       System    Running   OK
        Normal  No        Yes
isapnp  PnP ISA/EISA Bus Driver
        c:\windows\system32\drivers\isapnp.sys    Kernel Driver
        Yes     Boot      Running   OK        Critical  No
        Yes
kbdclass Keyboard Class Driver
        c:\windows\system32\drivers\kbdclass.sys  Kernel Driver
        Yes     System    Running   OK        Normal    No
        Yes
ksecdd  KSecDD    c:\windows\system32\drivers\ksecdd.sys    Kernel
Driver  Yes     Boot      Running   OK        Normal    No
        Yes
ksthunk Kernel Streaming WOW64 Thunk Service
        c:\windows\system32\drivers\ksthunk.sys   Kernel Driver
        Yes     Manual    Running   OK        Normal    No
        Yes
lp6nds35 lp6nds35 Not Available     Kernel Driver     No
        Disabled  Stopped   OK        Normal    No        No

mnmdd   mnmdd     c:\windows\system32\drivers\mnmdd.sys     Kernel
Driver  Yes     System    Running   OK        Ignore    No
        Yes
modem   Modem     c:\windows\system32\drivers\modem.sys     Kernel
Driver  No      Manual    Stopped   OK        Ignore    No
        No
mouclass Mouse Class Driver c:\windows\system32\drivers\mouclass.sys
        Kernel Driver     Yes       System    Running   OK
        Normal  No        Yes
mountmgr Mount Point Manager
        c:\windows\system32\drivers\mountmgr.sys Kernel Driver
        Yes     Boot      Running   OK        Normal    No
        Yes
mraid35x mraid35x Not Available     Kernel Driver     No
        Disabled  Stopped   OK        Normal    No        No

mrxdav  WebDav Client Redirector
        c:\windows\system32\drivers\mrxdav.sys    File System Driver
        No      Manual    Stopped   OK        Normal    No
        No
mrxsmb  MRXSMB c:\windows\system32\drivers\mrxsmb.sys    File
System Driver   Yes       System    Running   OK        Normal
        No      Yes
msfs    Msfs      c:\windows\system32\drivers\msfs.sys      File
System Driver   Yes       System    Running   OK        Normal
        No      Yes
mssmbios Microsoft System Management BIOS Driver
        c:\windows\system32\drivers\mssmbios.sys  Kernel Driver
        Yes     Manual    Running   OK        Normal    No
        Yes
mup     Mup       c:\windows\system32\drivers\mup.sys       File
System Driver   Yes       Boot      Running   OK        Normal
        No      Yes
ndis    NDIS System Driver  c:\windows\system32\drivers\ndis.sys
        Kernel Driver     Yes       Boot      Running   OK
        Normal  No        Yes
ndistapi Remote Access NDIS TAPI Driver
        c:\windows\system32\drivers\ndistapi.sys  Kernel Driver
        Yes     Manual    Running   OK        Normal    No
        Yes
ndisuio NDIS Usermode I/O Protocol
        c:\windows\system32\drivers\ndisuio.sys   Kernel Driver
        No      Manual    Stopped   OK        Normal    No
        No
ndiswan Remote Access NDIS WAN Driver
        c:\windows\system32\drivers\ndiswan.sys   Kernel Driver
        Yes     Manual    Running   OK        Normal    No
        Yes
ndproxy NDIS Proxy        c:\windows\system32\drivers\ndproxy.sys
        Kernel Driver     Yes       Manual    Running   OK
        Normal  No        Yes
netbios NetBIOS Interface c:\windows\system32\drivers\netbios.sys
        File System Driver Yes      System    Running   OK
        Normal  No        Yes
netbt   NetBios over Tcpip c:\windows\system32\drivers\netbt.sys
        Kernel Driver     Yes       System    Running   OK
        Normal  No        Yes
nfrd960 nfrd960   Not Available     Kernel Driver     No
        Disabled  Stopped   OK        Normal    No        No

npfs    Npfs      c:\windows\system32\drivers\npfs.sys      File
System Driver   Yes       System    Running   OK        Normal
        No      Yes
```


© 2006 Hewlett-Packard Company. All rights reserved.

```
ntfs        Ntfs        c:\windows\system32\drivers\ntfs.sys        File
System Driver           Yes         Disabled    Running     OK          Normal
            No          Yes
null        Null        c:\windows\system32\drivers\null.sys        Kernel
Driver      Yes         System      Running     OK          Normal      No
            Yes
parport     Parport     c:\windows\system32\drivers\parport.sys     Kernel
Driver      No          Manual      Stopped     OK          Ignore      No
            No
partmgr     Partition Manager       c:\windows\system32\drivers\partmgr.sys
            Kernel Driver           Yes         Boot        Running     OK
            Normal      No          Yes
pci         PCI Bus Driver          c:\windows\system32\drivers\pci.sys
            Kernel Driver           Yes         Boot        Running     OK
            Critical    No          Yes
pciide      PCIIde      Not Available           Kernel Driver           No
            Disabled    Stopped     OK          Normal      No          No

pcmcia      Pcmcia      c:\windows\system32\drivers\pcmcia.sys      Kernel
Driver      No          Disabled    Stopped     OK          Normal      No
            No
pdcomp      PDCOMP      Not Available           Kernel Driver           No
            Manual      Stopped     OK          Ignore      No          No

pdframe     PDFRAME                 Not Available           Kernel Driver
            No          Manual      Stopped     OK          Ignore      No
            No
pdreli      PDRELI      Not Available           Kernel Driver           No
            Manual      Stopped     OK          Ignore      No          No

pdrframe    PDRFRAME                Not Available           Kernel Driver
            No          Manual      Stopped     OK          Ignore      No
            No
pptpminiport            WAN Miniport (PPTP)
            c:\windows\system32\drivers\raspptp.sys         Kernel Driver
            Yes         Manual      Running     OK          Normal      No
            Yes
processor   Processor Driver        c:\windows\system32\drivers\processr.sys
            Kernel Driver           Yes         Manual      Running     OK
            Normal      No          Yes
ptilink     Direct Parallel Link Driver
            c:\windows\system32\drivers\ptilink.sys         Kernel Driver
            Yes         Manual      Running     OK          Normal      No
            Yes
ql2300      ql2300      Not Available           Kernel Driver           No
            Disabled    Stopped     OK          Normal      No          No

rasacd      Remote Access Auto Connection Driver
            c:\windows\system32\drivers\rasacd.sys          Kernel Driver
            Yes         System      Running     OK          Normal      No
            Yes
rasl2tp     WAN Miniport (L2TP)
            c:\windows\system32\drivers\rasl2tp.sys         Kernel Driver
            Yes         Manual      Running     OK          Normal      No
            Yes
raspppoe    Remote Access PPPOE Driver
            c:\windows\system32\drivers\raspppoe.sys        Kernel Driver
            Yes         Manual      Running     OK          Normal      No
            Yes
raspti      Direct Parallel         c:\windows\system32\drivers\raspti.sys
            Kernel Driver           Yes         Manual      Running     OK
            Normal      No          Yes
rdbss       Rdbss       c:\windows\system32\drivers\rdbss.sys       File
System Driver           Yes         System      Running     OK          Normal
            No          Yes
rdpcdd      RDPCDD      c:\windows\system32\drivers\rdpcdd.sys      Kernel
Driver      Yes         System      Running     OK          Ignore      No
            Yes
rdpdr       Terminal Server Device Redirector Driver
            c:\windows\system32\drivers\rdpdr.sys           Kernel Driver
            Yes         Manual      Running     OK          Normal      No
            Yes
rdpwd       RDPWD       c:\windows\system32\drivers\rdpwd.sys       Kernel
Driver      Yes         Manual      Running     OK          Ignore      No
            Yes
redbook     Digital CD Audio Playback Filter Driver
            c:\windows\system32\drivers\redbook.sys         Kernel Driver
            Yes         System      Running     OK          Normal      No
            Yes
secdrv      Security Driver         c:\windows\system32\drivers\secdrv.sys
            Kernel Driver           Yes         Auto        Running     OK
            Normal      No          Yes
serenum     Serenum Filter Driver   c:\windows\system32\drivers\serenum.sys
            Kernel Driver           Yes         Manual      Running     OK
            Normal      No          Yes
serial      Serial port driver      c:\windows\system32\drivers\serial.sys
            Kernel Driver           Yes         System      Running     OK
            Ignore      No          Yes
sfloppy     Sfloppy     c:\windows\system32\drivers\sfloppy.sys     Kernel
Driver      No          System      Stopped     OK          Ignore      No
            No
simbad      Simbad      Not Available           Kernel Driver           No
            Disabled    Stopped     OK          Normal      No          No

srv         Srv         c:\windows\system32\drivers\srv.sys         File
System Driver           Yes         Manual      Running     OK          Normal
            No          Yes
swenum      Software Bus Driver     c:\windows\system32\drivers\swenum.sys
            Kernel Driver           Yes         Manual      Running     OK
            Normal      No          Yes
symc8xx     symc8xx     Not Available           Kernel Driver           No
            Disabled    Stopped     OK          Normal      No          No

symmpi      symmpi      Not Available           Kernel Driver           No
            Disabled    Stopped     OK          Normal      No          No

sym_hi      sym_hi      Not Available           Kernel Driver           No
            Disabled    Stopped     OK          Normal      No          No

sym_u3      sym_u3      Not Available           Kernel Driver           No
            Disabled    Stopped     OK          Normal      No          No

tcpip       TCP/IP Protocol Driver
            c:\windows\system32\drivers\tcpip.sys           Kernel Driver
            Yes         System      Running     OK          Normal      No
            Yes
tdpipe      TDPIPE      c:\windows\system32\drivers\tdpipe.sys      Kernel
Driver      No          Manual      Stopped     OK          Ignore      No
            No
tdtcp       TDTCP       c:\windows\system32\drivers\tdtcp.sys       Kernel
Driver      Yes         Manual      Running     OK          Ignore      No
            Yes
termdd      Terminal Device Driver
            c:\windows\system32\drivers\termdd.sys          Kernel Driver
            Yes         System      Running     OK          Normal      No
            Yes
toside      TosIde      Not Available           Kernel Driver           No
            Disabled    Stopped     OK          Normal      No          No

udfs        Udfs        c:\windows\system32\drivers\udfs.sys        File
System Driver           No          Disabled    Stopped     OK          Normal
            No          No
ultra       ultra       Not Available           Kernel Driver           No
            Disabled    Stopped     OK          Normal      No          No

update      Microcode Update Driver
            c:\windows\system32\drivers\update.sys          Kernel Driver
            Yes         Manual      Running     OK          Normal      No
            Yes
```


© 2006 Hewlett-Packard Company. All rights reserved.

usbhub USB2 Enabled Hub c:\windows\system32\drivers\usbhub.sys
Kernel Driver Yes Manual Running OK
Normal No Yes
usbohci Microsoft USB Open Host Controller Miniport Driver
c:\windows\system32\drivers\usbohci.sys Kernel Driver
Yes Manual Running OK Normal No
Yes
vga vga c:\windows\system32\drivers\vgapnp.sys Kernel
Driver No Manual Stopped OK Ignore No
No
vgasave VGA Display Controller.
c:\windows\system32\drivers\vga.sys Kernel Driver
Yes System Running OK Ignore No
Yes
viaide ViaIde Not Available Kernel Driver No
Disabled Stopped OK Normal No No

volsnap Storage volumes c:\windows\system32\drivers\volsnap.sys
Kernel Driver Yes Boot Running OK
Normal No Yes
wanarp Remote Access IP ARP Driver
c:\windows\system32\drivers\wanarp.sys Kernel Driver
Yes Manual Running OK Normal No
Yes
wdica WDICA Not Available Kernel Driver No
Manual Stopped OK Ignore No No

wlbs Network Load Balancing
c:\windows\system32\drivers\wlbs.sys Kernel Driver
No Manual Stopped OK Normal No
No

[Signed Drivers]

Device Name Signed Device Class Driver Version
Driver Date Manufacturer INF Name Driver
Name Device ID
Microsoft System Management BIOS DriverYes SYSTEM
5.2.3790.1830 10/1/2002 (Standard system devices)
machine.inf Not Available
ROOT\SYSTEM\0002
Microcode Update Device Yes SYSTEM 5.2.3790.1830
10/1/2002 (Standard system devices) machine.inf
Not Available ROOT\SYSTEM\0001
Plug and Play Software Device Enumerator Yes SYSTEM
5.2.3790.1830 10/1/2002 (Standard system devices)
machine.inf Not Available
ROOT\SYSTEM\0000
Terminal Server Mouse Driver Yes SYSTEM 5.2.3790.1830
10/1/2002 (Standard system devices) machine.inf
Not Available ROOT\RDP_MOU\0000
Terminal Server Keyboard Driver Yes SYSTEM
5.2.3790.1830 10/1/2002 (Standard system devices)
machine.inf Not Available
ROOT\RDP_KBD\0000
Terminal Server Device Redirector Yes SYSTEM
5.2.3790.1830 10/1/2002 (Standard system devices)
machine.inf Not Available
ROOT\RDPDR\0000
Direct Parallel Yes NET 5.2.3790.1830
10/1/2002 Microsoft netrasa.inf Not Available
ROOT\MS_PTIMINIPORT\0000
WAN Miniport (PPTP) Yes NET 5.2.3790.1830
10/1/2002 Microsoft netrasa.inf Not Available
ROOT\MS_PPTPMINIPORT\0000
WAN Miniport (PPPOE) Yes NET 5.2.3790.1830
10/1/2002 Microsoft netrasa.inf Not Available
ROOT\MS_PPPOEMINIPORT\0000
WAN Miniport (IP) Yes NET 5.2.3790.1830
10/1/2002 Microsoft netrasa.inf Not Available
ROOT\MS_NDISWANIP\0000
WAN Miniport (L2TP) Yes NET 5.2.3790.1830
10/1/2002 Microsoft netrasa.inf Not Available
ROOT\MS_L2TPMINIPORT\0000
Video Codecs Yes MEDIA 5.2.3790.1830
10/1/2002 (Standard system devices) wave.inf Not
Available ROOT\MEDIA\MS_MMVID
Legacy Video Capture Devices Yes MEDIA 5.2.3790.1830
10/1/2002 (Standard system devices) wave.inf Not
Available ROOT\MEDIA\MS_MMVCD
Media Control Devices Yes MEDIA 5.2.3790.1830
10/1/2002 (Standard system devices) wave.inf Not
Available ROOT\MEDIA\MS_MMMCI
Legacy Audio DriversYes MEDIA 5.2.3790.1830
10/1/2002 (Standard system devices) wave.inf Not
Available ROOT\MEDIA\MS_MMDRV
Audio Codecs Yes MEDIA 5.2.3790.1830
10/1/2002 (Standard system devices) wave.inf Not
Available ROOT\MEDIA\MS_MMACM
Remote Access IP ARP Driver Not Available LEGACYDRIVER
Not Available Not Available Not Available
Not Available Not Available
ROOT\LEGACY_WANARP\0000
volsnap Not Available LEGACYDRIVER Not Available
Not Available Not Available Not Available
Not Available ROOT\LEGACY_VOLSNAP\0000

VGA Display Controller. Not Available LEGACYDRIVER
Not Available Not Available Not Available
Not Available Not Available
ROOT\LEGACY_VGASAVE\0000
TDTCP Not Available LEGACYDRIVER Not Available
Not Available Not Available Not Available
Not Available ROOT\LEGACY_TDTCP\0000
TCP/IP Protocol Driver Not Available LEGACYDRIVER
Not Available Not Available Not Available
Not Available Not Available
ROOT\LEGACY_TCPIP\0000
Security Driver Not Available LEGACYDRIVER Not
Available Not Available Not Available Not Available
Not Available ROOT\LEGACY_SECDRV\0000

RDPWD Not Available LEGACYDRIVER Not Available
Not Available Not Available Not Available
Not Available ROOT\LEGACY_RDPWD\0000
RDPCDD Not Available LEGACYDRIVER Not Available
Not Available Not Available Not Available
Not Available ROOT\LEGACY_RDPCDD\0000

Remote Access Auto Connection Driver Not Available
LEGACYDRIVER Not Available Not Available
Not Available Not Available Not Available
ROOT\LEGACY_RASACD\0000
Partition Manager Not Available LEGACYDRIVER Not
Available Not Available Not Available Not Available
Not Available ROOT\LEGACY_PARTMGR\0000

Null Not Available LEGACYDRIVER Not Available
Not Available Not Available Not Available
Not Available ROOT\LEGACY_NULL\0000
NetBios over Tcpip Not Available LEGACYDRIVER Not
Available Not Available Not Available Not Available
Not Available ROOT\LEGACY_NETBT\0000
NDProxy Not Available LEGACYDRIVER Not Available
Not Available Not Available Not Available
Not Available ROOT\LEGACY_NDPROXY\0000

© 2006 Hewlett-Packard Company. All rights reserved.

NDIS Usermode I/O Protocol Not Available LEGACYDRIVER
Not Available Not Available Not Available
Not Available Not Available
ROOT\LEGACY_NDISUIO\0000
Remote Access NDIS TAPI Driver Not Available
LEGACYDRIVER Not Available Not Available
Not Available Not Available Not Available
ROOT\LEGACY_NDISTAPI\0000
NDIS System Driver Not Available LEGACYDRIVER Not
Available Not Available Not Available Not Available
Not Available ROOT\LEGACY_NDIS\0000
mountmgr Not Available LEGACYDRIVER Not Available
Not Available Not Available Not Available
Not Available ROOT\LEGACY_MOUNTMGR\0000

mnmdd Not Available LEGACYDRIVER Not Available
Not Available Not Available Not Available
Not Available ROOT\LEGACY_MNMDD\0000

ksecdd Not Available LEGACYDRIVER Not Available
Not Available Not Available Not Available
Not Available ROOT\LEGACY_KSECDD\0000

IPSEC driver Not Available LEGACYDRIVER Not
Available Not Available Not Available Not Available
Not Available ROOT\LEGACY_IPSEC\0000
IP Network Address Translator Not Available LEGACYDRIVER
Not Available Not Available Not Available
Not Available Not Available
ROOT\LEGACY_IPNAT\0000
Smart Array Controllers Non-Miniport Disk Driver Not Available
LEGACYDRIVER Not Available Not Available
Not Available Not Available Not Available
ROOT\LEGACY_HPQCISSD\0000
Smart Array Controllers Non-Miniport Bus Driver Not Available
LEGACYDRIVER Not Available Not Available
Not Available Not Available Not Available
ROOT\LEGACY_HPQCISSB\0000
Generic Packet Classifier Not Available LEGACYDRIVER
Not Available Not Available Not Available
Not Available Not Available
ROOT\LEGACY_GPC\0000
Fips Not Available LEGACYDRIVER Not Available
Not Available Not Available Not Available
Not Available ROOT\LEGACY_FIPS\0000
dmload Not Available LEGACYDRIVER Not Available
Not Available Not Available Not Available
Not Available ROOT\LEGACY_DMLOAD\0000

dmboot Not Available LEGACYDRIVER Not Available
Not Available Not Available Not Available
Not Available ROOT\LEGACY_DMBOOT\0000

CRC Disk Filter Driver Not Available LEGACYDRIVER
Not Available Not Available Not Available
Not Available Not Available
ROOT\LEGACY_CRCDISK\0000
CdaD10BA Not Available LEGACYDRIVER Not
Available Not Available Not Available Not Available
Not Available ROOT\LEGACY_CDAD10BA\0000

CdaC15BA Not Available LEGACYDRIVER Not
Available Not Available Not Available Not Available
Not Available ROOT\LEGACY_CDAC15BA\0000

Beep Not Available LEGACYDRIVER Not Available
Not Available Not Available Not Available
Not Available ROOT\LEGACY_BEEP\0000

AFD Not Available LEGACYDRIVER Not Available
Not Available Not Available Not Available
Not Available ROOT\LEGACY_AFD\0000
Generic volume Yes VOLUME 5.2.3790.1830
10/1/2002 Microsoft volume.inf Not Available
STORAGE\VOLUME\1&30A96598&0&SIGNATURE6A82493
EOFFSET10000LENGTH32BD00000
Generic volume Yes VOLUME 5.2.3790.1830
10/1/2002 Microsoft volume.inf Not Available
STORAGE\VOLUME\1&30A96598&0&SIGNATURE6A82492
1OFFSET10000LENGTH658B00000
Generic volume Yes VOLUME 5.2.3790.1830
10/1/2002 Microsoft volume.inf Not Available
STORAGE\VOLUME\1&30A96598&0&SIGNATURE6A82493
7OFFSET10000LENGTH32BD00000
Generic volume Yes VOLUME 5.2.3790.1830
10/1/2002 Microsoft volume.inf Not Available
STORAGE\VOLUME\1&30A96598&0&SIGNATURE6A82493
COFFSET10000LENGTH658B00000
Generic volume Yes VOLUME 5.2.3790.1830
10/1/2002 Microsoft volume.inf Not Available
STORAGE\VOLUME\1&30A96598&0&SIGNATURE6A82494
AOFFSET10000LENGTH32BD00000
Generic volume Yes VOLUME 5.2.3790.1830
10/1/2002 Microsoft volume.inf Not Available
STORAGE\VOLUME\1&30A96598&0&SIGNATURE6A82494
FOFFSET10000LENGTH658B00000
Generic volume Yes VOLUME 5.2.3790.1830
10/1/2002 Microsoft volume.inf Not Available
STORAGE\VOLUME\1&30A96598&0&SIGNATURE6A82494
2OFFSET10000LENGTH32BD00000
Generic volume Yes VOLUME 5.2.3790.1830
10/1/2002 Microsoft volume.inf Not Available
STORAGE\VOLUME\1&30A96598&0&SIGNATURE6A82494
5OFFSET10000LENGTH658B00000
Generic volume Yes VOLUME 5.2.3790.1830
10/1/2002 Microsoft volume.inf Not Available
STORAGE\VOLUME\1&30A96598&0&SIGNATURE6A82494
DOFFSET10000LENGTH32BD00000
Generic volume Yes VOLUME 5.2.3790.1830
10/1/2002 Microsoft volume.inf Not Available
STORAGE\VOLUME\1&30A96598&0&SIGNATURE6A82493
1OFFSET10000LENGTH658B00000
Generic volume Yes VOLUME 5.2.3790.1830
10/1/2002 Microsoft volume.inf Not Available
STORAGE\VOLUME\1&30A96598&0&SIGNATURE6A82494
8OFFSET10000LENGTH32BD00000
Generic volume Yes VOLUME 5.2.3790.1830
10/1/2002 Microsoft volume.inf Not Available
STORAGE\VOLUME\1&30A96598&0&SIGNATURE6A82493
3OFFSET10000LENGTH658B00000
Generic volume Yes VOLUME 5.2.3790.1830
10/1/2002 Microsoft volume.inf Not Available
STORAGE\VOLUME\1&30A96598&0&SIGNATURE6A82493
DOFFSET10000LENGTH32C400000
Generic volume Yes VOLUME 5.2.3790.1830
10/1/2002 Microsoft volume.inf Not Available
STORAGE\VOLUME\1&30A96598&0&SIGNATURE6A82495
COFFSET10000LENGTH658D00000
Generic volume Yes VOLUME 5.2.3790.1830
10/1/2002 Microsoft volume.inf Not Available
STORAGE\VOLUME\1&30A96598&0&SIGNATUREF3FED0
4EOFFSET10000LENGTH176800000
Generic volume Yes VOLUME 5.2.3790.1830
10/1/2002 Microsoft volume.inf Not Available
STORAGE\VOLUME\1&30A96598&0&SIGNATURE6A82493
AOFFSET10000LENGTH32C400000
Generic volume Yes VOLUME 5.2.3790.1830
10/1/2002 Microsoft volume.inf Not Available

© 2006 Hewlett-Packard Company. All rights reserved.

STORAGE\VOLUME\1&30A96598&0&SIGNATURE6A824923OFFSET10000LENGTH658D00000
Generic volume Yes VOLUME 5.2.3790.1830
10/1/2002 Microsoft volume.inf Not Available
STORAGE\VOLUME\1&30A96598&0&SIGNATUREF3FED04COFFSET10000LENGTH6B3E00000
Generic volume Yes VOLUME 5.2.3790.1830
10/1/2002 Microsoft volume.inf Not Available
STORAGE\VOLUME\1&30A96598&0&SIGNATUREF3FED04FOFFSET10000LENGTH3E800000
Generic volume Yes VOLUME 5.2.3790.1830
10/1/2002 Microsoft volume.inf Not Available
STORAGE\VOLUME\1&30A96598&0&SIGNATUREF343F8A8OFFSET10000LENGTH4E1D00000
Generic volume Yes VOLUME 5.2.3790.1830
10/1/2002 Microsoft volume.inf Not Available
STORAGE\VOLUME\1&30A96598&0&SIGNATURE94D494D4OFFSET4000LENGTH87A3D0000
Volume Manager Yes SYSTEM 5.2.3790.1830
10/1/2002 (Standard system devices) machine.inf
Not Available ROOT\FTDISK\0000
Generic volume Yes VOLUME 5.2.3790.1830
10/1/2002 Microsoft volume.inf Not Available
STORAGE\VOLUME\1&3735C57B&0&LDM#{18651E3F-AF62-4509-8C90-448C1BA42C60}
Logical Disk ManagerYes SYSTEM 5.2.3790.1830
10/1/2002 (Standard system devices) machine.inf
Not Available ROOT\DMIO\0000
ACPI Fixed Feature Button Yes SYSTEM 5.2.3790.1830
10/1/2002 (Standard system devices) machine.inf
Not Available ACPI\FIXEDBUTTON\2&DABA3FF&0

AMD-8131 HyperTransport(tm) IOAPIC Controller Yes SYSTEM
5.2.3790.1830 10/1/2002 AMD machine.inf
Not Available
PCI\VEN_1022&DEV_7451&SUBSYS_00000000&REV_01\3&33B859B7&0&61
Disk drive Yes DISKDRIVE 5.2.3790.1830
10/1/2002 (Standard disk drives) disk.inf Not Available
SCSI\DISK&VEN_COMPAQ&PROD_LOGICAL_VOLUME&REV_1.20\5&32C8AA5&0&060
Disk drive Yes DISKDRIVE 5.2.3790.1830
10/1/2002 (Standard disk drives) disk.inf Not Available
SCSI\DISK&VEN_COMPAQ&PROD_LOGICAL_VOLUME&REV_1.20\5&32C8AA5&0&050
Disk drive Yes DISKDRIVE 5.2.3790.1830
10/1/2002 (Standard disk drives) disk.inf Not Available
SCSI\DISK&VEN_COMPAQ&PROD_LOGICAL_VOLUME&REV_1.20\5&32C8AA5&0&040
HP Virtual LUN Yes SYSTEM 5.2.3790.1830
10/1/2002 Compaq scsidev.inf Not Available
SCSI\OTHER&VEN_COMPAQ&PROD_SCSI_COMMUNICATE&REV_CIS2\5&32C8AA5&0&000
Smart Array P600 Controller No SCSIADAPTER 5.6.0.64
8/29/2005 Hewlett-Packard Company oem4.inf Not Available
PCI\VEN_103C&DEV_3220&SUBSYS_3225103C&REV_00\4&62BA2CA&0&6060
Disk drive Yes DISKDRIVE 5.2.3790.1830
10/1/2002 (Standard disk drives) disk.inf Not Available
SCSI\DISK&VEN_COMPAQ&PROD_LOGICAL_VOLUME&REV_1.20\5&35F6B935&0&060
Disk drive Yes DISKDRIVE 5.2.3790.1830
10/1/2002 (Standard disk drives) disk.inf Not Available
SCSI\DISK&VEN_COMPAQ&PROD_LOGICAL_VOLUME&REV_1.20\5&35F6B935&0&050
Disk drive Yes DISKDRIVE 5.2.3790.1830
10/1/2002 (Standard disk drives) disk.inf Not Available
SCSI\DISK&VEN_COMPAQ&PROD_LOGICAL_VOLUME&REV_1.20\5&35F6B935&0&040
HP Virtual LUN Yes SYSTEM 5.2.3790.1830
10/1/2002 Compaq scsidev.inf Not Available
SCSI\OTHER&VEN_COMPAQ&PROD_SCSI_COMMUNICATE&REV_CIS2\5&35F6B935&0&000
Smart Array P600 Controller No SCSIADAPTER 5.6.0.64
8/29/2005 Hewlett-Packard Company oem4.inf Not Available
PCI\VEN_103C&DEV_3220&SUBSYS_3225103C&REV_00\4&62BA2CA&0&5860
PCI standard PCI-to-PCI bridge Yes SYSTEM 5.2.3790.1830
10/1/2002 (Standard system devices) machine.inf
Not Available
PCI\VEN_1022&DEV_7450&SUBSYS_00000000&REV_12\3&33B859B7&0&60
AMD-8131 HyperTransport(tm) IOAPIC Controller Yes SYSTEM
5.2.3790.1830 10/1/2002 AMD machine.inf
Not Available
PCI\VEN_1022&DEV_7451&SUBSYS_00000000&REV_01\3&33B859B7&0&59
Disk drive Yes DISKDRIVE 5.2.3790.1830
10/1/2002 (Standard disk drives) disk.inf Not Available
SCSI\DISK&VEN_COMPAQ&PROD_LOGICAL_VOLUME&REV_1.20\5&30908C0A&0&060
Disk drive Yes DISKDRIVE 5.2.3790.1830
10/1/2002 (Standard disk drives) disk.inf Not Available
SCSI\DISK&VEN_COMPAQ&PROD_LOGICAL_VOLUME&REV_1.20\5&30908C0A&0&050
Disk drive Yes DISKDRIVE 5.2.3790.1830
10/1/2002 (Standard disk drives) disk.inf Not Available
SCSI\DISK&VEN_COMPAQ&PROD_LOGICAL_VOLUME&REV_1.20\5&30908C0A&0&040
HP Virtual LUN Yes SYSTEM 5.2.3790.1830
10/1/2002 Compaq scsidev.inf Not Available
SCSI\OTHER&VEN_COMPAQ&PROD_SCSI_COMMUNICATE&REV_CIS2\5&30908C0A&0&000
Smart Array P600 Controller No SCSIADAPTER 5.6.0.64
8/29/2005 Hewlett-Packard Company oem4.inf Not Available
PCI\VEN_103C&DEV_3220&SUBSYS_3225103C&REV_00\4&2534A57B&0&5058
Disk drive Yes DISKDRIVE 5.2.3790.1830
10/1/2002 (Standard disk drives) disk.inf Not Available
SCSI\DISK&VEN_COMPAQ&PROD_LOGICAL_VOLUME&REV_1.20\5&27BFF093&0&060
Disk drive Yes DISKDRIVE 5.2.3790.1830
10/1/2002 (Standard disk drives) disk.inf Not Available
SCSI\DISK&VEN_COMPAQ&PROD_LOGICAL_VOLUME&REV_1.20\5&27BFF093&0&050
Disk drive Yes DISKDRIVE 5.2.3790.1830
10/1/2002 (Standard disk drives) disk.inf Not Available
SCSI\DISK&VEN_COMPAQ&PROD_LOGICAL_VOLUME&REV_1.20\5&27BFF093&0&040
HP Virtual LUN Yes SYSTEM 5.2.3790.1830
10/1/2002 Compaq scsidev.inf Not Available
SCSI\OTHER&VEN_COMPAQ&PROD_SCSI_COMMUNICATE&REV_CIS2\5&27BFF093&0&000
Smart Array P600 Controller No SCSIADAPTER 5.6.0.64
8/29/2005 Hewlett-Packard Company oem4.inf Not Available
PCI\VEN_103C&DEV_3220&SUBSYS_3225103C&REV_00\4&2534A57B&0&4858
PCI standard PCI-to-PCI bridge Yes SYSTEM 5.2.3790.1830
10/1/2002 (Standard system devices) machine.inf
Not Available
PCI\VEN_1022&DEV_7450&SUBSYS_00000000&REV_12\3&33B859B7&0&58
AMD-8131 HyperTransport(tm) IOAPIC Controller Yes SYSTEM
5.2.3790.1830 10/1/2002 AMD machine.inf
Not Available

© 2006 Hewlett-Packard Company. All rights reserved.

PCI\VEN_1022&DEV_7451&SUBSYS_00000000&REV_01\3
&33B859B7&0&51
Disk drive Yes DISKDRIVE 5.2.3790.1830
10/1/2002 (Standard disk drives) disk.inf Not Available
SCSI\DISK&VEN_COMPAQ&PROD_LOGICAL_VOLUME&
REV_1.20\5&5BF52E4&0&060
Disk drive Yes DISKDRIVE 5.2.3790.1830
10/1/2002 (Standard disk drives) disk.inf Not Available
SCSI\DISK&VEN_COMPAQ&PROD_LOGICAL_VOLUME&
REV_1.20\5&5BF52E4&0&050
Disk drive Yes DISKDRIVE 5.2.3790.1830
10/1/2002 (Standard disk drives) disk.inf Not Available
SCSI\DISK&VEN_COMPAQ&PROD_LOGICAL_VOLUME&
REV_1.20\5&5BF52E4&0&040
HP Virtual LUN Yes SYSTEM 5.2.3790.1830
10/1/2002 Compaq scsidev.inf Not Available
SCSI\OTHER&VEN_COMPAQ&PROD_SCSI_COMMUNICA
TE&REV_CIS2\5&5BF52E4&0&000
Smart Array P600 Controller No SCSIADAPTER 5.6.0.64
8/29/2005 Hewlett-Packard Company oem4.inf Not
Available
PCI\VEN_103C&DEV_3220&SUBSYS_3225103C&REV_00\4
&9630B56&0&7050
PCI standard PCI-to-PCI bridge Yes SYSTEM 5.2.3790.1830
10/1/2002 (Standard system devices) machine.inf
Not Available
PCI\VEN_1022&DEV_7450&SUBSYS_00000000&REV_12\3
&33B859B7&0&50
AMD-8131 HyperTransport(tm) IOAPIC Controller Yes SYSTEM
5.2.3790.1830 10/1/2002 AMD machine.inf
Not Available
PCI\VEN_1022&DEV_7451&SUBSYS_00000000&REV_01\3
&33B859B7&0&49
Disk drive Yes DISKDRIVE 5.2.3790.1830
10/1/2002 (Standard disk drives) disk.inf Not Available
SCSI\DISK&VEN_COMPAQ&PROD_LOGICAL_VOLUME&
REV_1.20\5&4C7AE76&0&060
Disk drive Yes DISKDRIVE 5.2.3790.1830
10/1/2002 (Standard disk drives) disk.inf Not Available
SCSI\DISK&VEN_COMPAQ&PROD_LOGICAL_VOLUME&
REV_1.20\5&4C7AE76&0&050
Disk drive Yes DISKDRIVE 5.2.3790.1830
10/1/2002 (Standard disk drives) disk.inf Not Available
SCSI\DISK&VEN_COMPAQ&PROD_LOGICAL_VOLUME&
REV_1.20\5&4C7AE76&0&040
HP Virtual LUN Yes SYSTEM 5.2.3790.1830
10/1/2002 Compaq scsidev.inf Not Available
SCSI\OTHER&VEN_COMPAQ&PROD_SCSI_COMMUNICA
TE&REV_CIS2\5&4C7AE76&0&000
Smart Array P600 Controller No SCSIADAPTER 5.6.0.64
8/29/2005 Hewlett-Packard Company oem4.inf Not
Available
PCI\VEN_103C&DEV_3220&SUBSYS_3225103C&REV_00\4
&25F4D2AC&0&6848
PCI standard PCI-to-PCI bridge Yes SYSTEM 5.2.3790.1830
10/1/2002 (Standard system devices) machine.inf
Not Available
PCI\VEN_1022&DEV_7450&SUBSYS_00000000&REV_12\3
&33B859B7&0&48
PCI bus Yes SYSTEM 5.2.3790.1830 10/1/2002 (Standard
system devices) machine.inf Not Available
ACPI\PNP0A03\8
AMD Miscellaneous Configuration Yes SYSTEM
5.2.3790.1830 10/1/2002 AMD machine.inf
Not Available
PCI\VEN_1022&DEV_1103&SUBSYS_00000000&REV_00\3
&20FEA912&0&DB
AMD DRAM and HyperTransport(tm) Trace Mode Configuration Yes
SYSTEM 5.2.3790.1830 10/1/2002 AMD
machine.inf Not Available
PCI\VEN_1022&DEV_1102&SUBSYS_00000000&REV_00\3
&20FEA912&0&DA
AMD Address Map Configuration Yes SYSTEM
5.2.3790.1830 10/1/2002 AMD machine.inf
Not Available
PCI\VEN_1022&DEV_1101&SUBSYS_00000000&REV_00\3
&20FEA912&0&D9
AMD HyperTransport(tm) Configuration Yes SYSTEM
5.2.3790.1830 10/1/2002 AMD machine.inf
Not Available
PCI\VEN_1022&DEV_1100&SUBSYS_00000000&REV_00\3
&20FEA912&0&D8
AMD Miscellaneous Configuration Yes SYSTEM
5.2.3790.1830 10/1/2002 AMD machine.inf
Not Available
PCI\VEN_1022&DEV_1103&SUBSYS_00000000&REV_00\3
&20FEA912&0&D3
AMD DRAM and HyperTransport(tm) Trace Mode Configuration Yes
SYSTEM 5.2.3790.1830 10/1/2002 AMD
machine.inf Not Available
PCI\VEN_1022&DEV_1102&SUBSYS_00000000&REV_00\3
&20FEA912&0&D2
AMD Address Map Configuration Yes SYSTEM
5.2.3790.1830 10/1/2002 AMD machine.inf
Not Available
PCI\VEN_1022&DEV_1101&SUBSYS_00000000&REV_00\3
&20FEA912&0&D1
AMD HyperTransport(tm) Configuration Yes SYSTEM
5.2.3790.1830 10/1/2002 AMD machine.inf
Not Available
PCI\VEN_1022&DEV_1100&SUBSYS_00000000&REV_00\3
&20FEA912&0&D0
AMD Miscellaneous Configuration Yes SYSTEM
5.2.3790.1830 10/1/2002 AMD machine.inf
Not Available
PCI\VEN_1022&DEV_1103&SUBSYS_00000000&REV_00\3
&20FEA912&0&CB
AMD DRAM and HyperTransport(tm) Trace Mode Configuration Yes
SYSTEM 5.2.3790.1830 10/1/2002 AMD
machine.inf Not Available
PCI\VEN_1022&DEV_1102&SUBSYS_00000000&REV_00\3
&20FEA912&0&CA
AMD Address Map Configuration Yes SYSTEM
5.2.3790.1830 10/1/2002 AMD machine.inf
Not Available
PCI\VEN_1022&DEV_1101&SUBSYS_00000000&REV_00\3
&20FEA912&0&C9
AMD HyperTransport(tm) Configuration Yes SYSTEM
5.2.3790.1830 10/1/2002 AMD machine.inf
Not Available
PCI\VEN_1022&DEV_1100&SUBSYS_00000000&REV_00\3
&20FEA912&0&C8
AMD Miscellaneous Configuration Yes SYSTEM
5.2.3790.1830 10/1/2002 AMD machine.inf
Not Available
PCI\VEN_1022&DEV_1103&SUBSYS_00000000&REV_00\3
&20FEA912&0&C3
AMD DRAM and HyperTransport(tm) Trace Mode Configuration Yes
SYSTEM 5.2.3790.1830 10/1/2002 AMD
machine.inf Not Available
PCI\VEN_1022&DEV_1102&SUBSYS_00000000&REV_00\3
&20FEA912&0&C2
AMD Address Map Configuration Yes SYSTEM
5.2.3790.1830 10/1/2002 AMD machine.inf
Not Available
PCI\VEN_1022&DEV_1101&SUBSYS_00000000&REV_00\3
&20FEA912&0&C1
AMD HyperTransport(tm) Configuration Yes SYSTEM
5.2.3790.1830 10/1/2002 AMD machine.inf
Not Available

© 2006 Hewlett-Packard Company. All rights reserved.

PCI\VEN_1022&DEV_1100&SUBSYS_00000000&REV_00\3
&20FEA912&0&C0
AMD-8131 HyperTransport(tm) IOAPIC Controller Yes SYSTEM
5.2.3790.1830 10/1/2002 AMD machine.inf
Not Available
PCI\VEN_1022&DEV_7451&SUBSYS_00000000&REV_01\3
&20FEA912&0&41
Disk drive Yes DISKDRIVE 5.2.3790.1830
10/1/2002 (Standard disk drives) disk.inf Not Available
SCSI\DISK&VEN_COMPAQ&PROD_LOGICAL_VOLUME&
REV_1.20\5&1F967069&0&060
Disk drive Yes DISKDRIVE 5.2.3790.1830
10/1/2002 (Standard disk drives) disk.inf Not Available
SCSI\DISK&VEN_COMPAQ&PROD_LOGICAL_VOLUME&
REV_1.20\5&1F967069&0&050
Disk drive Yes DISKDRIVE 5.2.3790.1830
10/1/2002 (Standard disk drives) disk.inf Not Available
SCSI\DISK&VEN_COMPAQ&PROD_LOGICAL_VOLUME&
REV_1.20\5&1F967069&0&040
HP Virtual LUN Yes SYSTEM 5.2.3790.1830
10/1/2002 Compaq scsidev.inf Not Available
SCSI\OTHER&VEN_COMPAQ&PROD_SCSI_COMMUNICA
TE&REV_CIS2\5&1F967069&0&000
Smart Array P600 Controller No SCSIADAPTER 5.6.0.64
8/29/2005 Hewlett-Packard Company oem4.inf Not
Available
PCI\VEN_103C&DEV_3220&SUBSYS_3225103C&REV_00\4
&24B9E852&0&4040
Disk drive Yes DISKDRIVE 5.2.3790.1830
10/1/2002 (Standard disk drives) disk.inf Not Available
SCSI\DISK&VEN_COMPAQ&PROD_LOGICAL_VOLUME&
REV_1.20\5&16C5D4F2&0&070
Disk drive Yes DISKDRIVE 5.2.3790.1830
10/1/2002 (Standard disk drives) disk.inf Not Available
SCSI\DISK&VEN_COMPAQ&PROD_LOGICAL_VOLUME&
REV_1.20\5&16C5D4F2&0&060
Disk drive Yes DISKDRIVE 5.2.3790.1830
10/1/2002 (Standard disk drives) disk.inf Not Available
SCSI\DISK&VEN_COMPAQ&PROD_LOGICAL_VOLUME&
REV_1.20\5&16C5D4F2&0&050
Disk drive Yes DISKDRIVE 5.2.3790.1830
10/1/2002 (Standard disk drives) disk.inf Not Available
SCSI\DISK&VEN_COMPAQ&PROD_LOGICAL_VOLUME&
REV_1.20\5&16C5D4F2&0&040
HP Virtual LUN Yes SYSTEM 5.2.3790.1830
10/1/2002 Compaq scsidev.inf Not Available
SCSI\OTHER&VEN_COMPAQ&PROD_SCSI_COMMUNICA
TE&REV_CIS2\5&16C5D4F2&0&000
Smart Array P600 Controller No SCSIADAPTER 5.6.0.64
8/29/2005 Hewlett-Packard Company oem4.inf Not
Available
PCI\VEN_103C&DEV_3220&SUBSYS_3225103C&REV_00\4
&24B9E852&0&3840
PCI standard PCI-to-PCI bridge Yes SYSTEM 5.2.3790.1830
10/1/2002 (Standard system devices) machine.inf
Not Available
PCI\VEN_1022&DEV_7450&SUBSYS_00000000&REV_12\3
&20FEA912&0&40
AMD-8131 HyperTransport(tm) IOAPIC Controller Yes SYSTEM
5.2.3790.1830 10/1/2002 AMD machine.inf
Not Available
PCI\VEN_1022&DEV_7451&SUBSYS_00000000&REV_01\3
&20FEA912&0&39
Broadcom NetXtreme Gigabit Ethernet Yes NET 7.98.0.0
10/1/2002 Broadcom net57amd.inf Not Available
PCI\VEN_14E4&DEV_1648&SUBSYS_00D00E11&REV_10\4
&82820FC&0&3138
Broadcom NetXtreme Gigabit Ethernet Yes NET 7.98.0.0
10/1/2002 Broadcom net57amd.inf Not Available
PCI\VEN_14E4&DEV_1648&SUBSYS_00D00E11&REV_10\4
&82820FC&0&3038
Disk drive Yes DISKDRIVE 5.2.3790.1830
10/1/2002 (Standard disk drives) disk.inf Not Available
SCSI\DISK&VEN_COMPAQ&PROD_LOGICAL_VOLUME&
REV_2.62\5&208597A6&0&070
Disk drive Yes DISKDRIVE 5.2.3790.1830
10/1/2002 (Standard disk drives) disk.inf Not Available
SCSI\DISK&VEN_COMPAQ&PROD_LOGICAL_VOLUME&
REV_2.62\5&208597A6&0&060
Disk drive Yes DISKDRIVE 5.2.3790.1830
10/1/2002 (Standard disk drives) disk.inf Not Available
SCSI\DISK&VEN_COMPAQ&PROD_LOGICAL_VOLUME&
REV_2.62\5&208597A6&0&050
Disk drive Yes DISKDRIVE 5.2.3790.1830
10/1/2002 (Standard disk drives) disk.inf Not Available
SCSI\DISK&VEN_COMPAQ&PROD_LOGICAL_VOLUME&
REV_2.62\5&208597A6&0&040
HP Virtual LUN Yes SYSTEM 5.2.3790.1830
10/1/2002 Compaq scsidev.inf Not Available
SCSI\OTHER&VEN_COMPAQ&PROD_SCSI_COMMUNICA
TE&REV_CISS\5&208597A6&0&000
Smart Array 5i Yes SCSIADAPTER 5.2.3790.1830
10/1/2002 Compaq pnpscsi.inf Not Available
PCI\VEN_0E11&DEV_B178&SUBSYS_40800E11&REV_01\4
&82820FC&0&2038
PCI standard PCI-to-PCI bridge Yes SYSTEM 5.2.3790.1830
10/1/2002 (Standard system devices) machine.inf
Not Available
PCI\VEN_1022&DEV_7450&SUBSYS_00000000&REV_12\3
&20FEA912&0&38
AMD-8111 System Management Controller Yes SYSTEM
5.2.3790.1830 10/1/2002 AMD machine.inf
Not Available
PCI\VEN_1022&DEV_746B&SUBSYS_32050E11&REV_05\3
&20FEA912&0&23
CD-ROM Drive Yes CDROM 5.2.3790.1830
10/1/2002 (Standard CD-ROM drives) cdrom.inf Not
Available IDE\CDROMCOMPAQ_CD-ROM_SN-
124_____N104____\5&2DC47F1C&0&0.0.0
Primary IDE Channel Yes HDC 5.2.3790.1830
10/1/2002 (Standard IDE ATA/ATAPI controllers) mshdc.inf
Not Available
PCIIDE\IDECHANNEL\4&21637DBD&0&0
AMD-8111 PCI Bus Master IDE Controller Yes HDC
5.2.3790.1830 10/1/2002 Advanced Micro Devices
mshdc.inf Not Available
PCI\VEN_1022&DEV_7469&SUBSYS_32040E11&REV_03\3
&20FEA912&0&21
Floppy disk drive Yes FLOPPYDISK 5.2.3790.1830
10/1/2002 (Standard floppy disk drives) flpydisk.inf
Not Available
FDC\GENERIC_FLOPPY_DRIVE\6&2F72E85F&0&0

Standard floppy disk controller Yes FDC 5.2.3790.1830
10/1/2002 (Standard floppy disk controllers) fdc.inf
Not Available ACPI\PNP0700\5&1C430410&0
Communications Port Yes PORTS 5.2.3790.1830
10/1/2002 (Standard port types) msports.inf Not
Available ACPI\PNP0501\0
Extended IO Bus Yes SYSTEM 5.2.3790.1830
10/1/2002 (Standard system devices) machine.inf
Not Available ACPI\PNP0A06\4&1C7DEDE8&0

PS/2 Compatible Mouse Yes MOUSE 5.2.3790.1830
10/1/2002 Microsoft msmouse.inf Not Available
ACPI\PNP0F13\4&1C7DEDE8&0
Standard 101/102-Key or Microsoft Natural PS/2 Keyboard Yes
KEYBOARD 5.2.3790.1830 10/1/2002 (Standard

© 2006 Hewlett-Packard Company. All rights reserved.

keyboards)keyboard.inf Not Available
ACPI\PNP0303\4&1C7DEDE8&0
System speaker Yes SYSTEM 5.2.3790.1830
10/1/2002 (Standard system devices) machine.inf
Not Available ACPI\PNP0800\4&1C7DEDE8&0

Direct memory access controller Yes SYSTEM 5.2.3790.1830
10/1/2002 (Standard system devices) machine.inf
Not Available ACPI\PNP0200\4&1C7DEDE8&0

System timer Yes SYSTEM 5.2.3790.1830
10/1/2002 (Standard system devices) machine.inf
Not Available ACPI\PNP0100\4&1C7DEDE8&0

Programmable interrupt controller Yes SYSTEM
5.2.3790.1830 10/1/2002 (Standard system devices)
machine.inf Not Available
ACPI\PNP0000\4&1C7DEDE8&0
Motherboard resources Yes SYSTEM 5.2.3790.1830
10/1/2002 (Standard system devices) machine.inf
Not Available ACPI\PNP0C02\0
PCI standard ISA bridge Yes SYSTEM 5.2.3790.1830
10/1/2002 (Standard system devices) machine.inf
Not Available
PCI\VEN_1022&DEV_7468&SUBSYS_00000000&REV_05\3
&20FEA912&0&20
Plug and Play Monitor Yes MONITOR
5.2.3790.1830 10/1/2002 (Standard monitor types)
monitor.inf Not Available
DISPLAY\AVO0402\5&38B1FFCB&0&80000001&01&03

RAGE XL PCI (Microsoft Corporation) Yes DISPLAY
6.14.10.6025 12/3/2004 ATI Technologies, Inc.
atiixpad.inf Not Available
PCI\VEN_1002&DEV_4752&SUBSYS_001E0E11&REV_27\4
&12365AD0&0&1818
Base System Device Not Available UNKNOWN Not
Available Not Available Not Available Not Available
Not Available
PCI\VEN_0E11&DEV_B204&SUBSYS_B2060E11&REV_01\4
&12365AD0&0&1218
Base System Device Not Available UNKNOWN Not
Available Not Available Not Available Not Available
Not Available
PCI\VEN_0E11&DEV_B203&SUBSYS_B2060E11&REV_01\4
&12365AD0&0&1018
USB Root Hub Yes USB 5.2.3790.1830
10/1/2002 (Standard USB Host Controller) usbport.inf Not
Available USB\ROOT_HUB\5&194CD4CC&0
AMD PCI to USB Open Host Controller Yes USB
5.2.3790.1830 10/1/2002 Advanced Micro Devices
(AMD) usbport.inf Not Available
PCI\VEN_1022&DEV_7464&SUBSYS_32020E11&REV_0B\4
&12365AD0&0&0118
USB Root Hub Yes USB 5.2.3790.1830
10/1/2002 (Standard USB Host Controller) usbport.inf Not
Available USB\ROOT_HUB\5&9B4CD91&0
AMD PCI to USB Open Host Controller Yes USB
5.2.3790.1830 10/1/2002 Advanced Micro Devices
(AMD) usbport.inf Not Available
PCI\VEN_1022&DEV_7464&SUBSYS_32020E11&REV_0B\4
&12365AD0&0&0018
PCI standard PCI-to-PCI bridge Yes SYSTEM 5.2.3790.1830
10/1/2002 (Standard system devices) machine.inf
Not Available
PCI\VEN_1022&DEV_7460&SUBSYS_00000000&REV_07\3
&20FEA912&0&18
PCI bus Yes SYSTEM 5.2.3790.1830 10/1/2002 (Standard
system devices) machine.inf Not Available
ACPI\PNP0A03\7
Processor Yes PROCESSOR 5.2.3790.1830
10/1/2002 (Standard processor types) cpu.inf Not
Available ACPI\AUTHENTICAMD_-
_AMD64_FAMILY_15_MODEL_33_7
Processor Yes PROCESSOR 5.2.3790.1830
10/1/2002 (Standard processor types) cpu.inf Not
Available ACPI\AUTHENTICAMD_-
_AMD64_FAMILY_15_MODEL_33_6
Processor Yes PROCESSOR 5.2.3790.1830
10/1/2002 (Standard processor types) cpu.inf Not
Available ACPI\AUTHENTICAMD_-
_AMD64_FAMILY_15_MODEL_33_5
Processor Yes PROCESSOR 5.2.3790.1830
10/1/2002 (Standard processor types) cpu.inf Not
Available ACPI\AUTHENTICAMD_-
_AMD64_FAMILY_15_MODEL_33_4
Processor Yes PROCESSOR 5.2.3790.1830
10/1/2002 (Standard processor types) cpu.inf Not
Available ACPI\AUTHENTICAMD_-
_AMD64_FAMILY_15_MODEL_33_3
Processor Yes PROCESSOR 5.2.3790.1830
10/1/2002 (Standard processor types) cpu.inf Not
Available ACPI\AUTHENTICAMD_-
_AMD64_FAMILY_15_MODEL_33_2
Processor Yes PROCESSOR 5.2.3790.1830
10/1/2002 (Standard processor types) cpu.inf Not
Available ACPI\AUTHENTICAMD_-
_AMD64_FAMILY_15_MODEL_33_1
Processor Yes PROCESSOR 5.2.3790.1830
10/1/2002 (Standard processor types) cpu.inf Not
Available ACPI\AUTHENTICAMD_-
_AMD64_FAMILY_15_MODEL_33_0
Microsoft ACPI-Compliant System Yes SYSTEM
5.2.3790.1830 10/1/2002 Microsoft acpi.inf Not
Available ACPI_HAL\PNP0C08\0
ACPI Multiprocessor x64-based PC Yes COMPUTER
5.2.3790.1830 10/1/2002 (Standard computers) hal.inf
Not Available ROOT\ACPI_HAL\0000
Not Available Not Available Not Available Not
Available Not Available Not Available Not Available
Not Available HTREE\ROOT\0

[Environment Variables]

Variable Value User Name
ClusterLogC:\WINDOWS\Cluster\cluster.log <SYSTEM>

ComSpec %SystemRoot%\system32\cmd.exe <SYSTEM>

FP_NO_HOST_CHECK NO <SYSTEM>
NUMBER_OF_PROCESSORS 8 <SYSTEM>
OS Windows_NT <SYSTEM>
Path
%SystemRoot%\system32;%SystemRoot%;%SystemRoot%\Syst
em32\Wbem; C:\Program Files\Microsoft SQL
Server\MSSQL.1\MSSQL\Binn\;C:\Program Files\Microsoft SQL
Server\MSSQL.1\MSSQL\Binn;C:\Program Files (x86)\Microsoft SQL
Server\80\Tools\Binn\;C:\Program Files\Microsoft SQL
Server\90\Tools\binn\;C:\Program Files (x86)\Microsoft SQL
Server\90\Tools\binn\;C:\Program Files (x86)\Microsoft SQL
Server\90\DTS\Binn\;C:\Program Files (x86)\Microsoft SQL
Server\90\Tools\Binn\VSShell\Common7\IDE\ <SYSTEM>

PATHEXT
.COM;.EXE;.BAT;.CMD;.VBS;.VBE;.JS;.JSE;.WSF;.WSH
<SYSTEM>
PROCESSOR_ARCHITECTURE AMD64 <SYSTEM>

PROCESSOR_IDENTIFIER AMD64 Family 15 Model 33 Stepping 2,
AuthenticAMD <SYSTEM>

© 2006 Hewlett-Packard Company. All rights reserved.

PROCESSOR_LEVEL 15 <SYSTEM>
PROCESSOR_REVISION 2102 <SYSTEM>
TEMP %SystemRoot%\TEMP <SYSTEM>
TMP %SystemRoot%\TEMP <SYSTEM>
windir %SystemRoot% <SYSTEM>
TEMP %USERPROFILE%\Local Settings\Temp NT AUTHORITY\SYSTEM
TMP %USERPROFILE%\Local Settings\Temp NT AUTHORITY\SYSTEM
TEMP %USERPROFILE%\Local Settings\Temp NT AUTHORITY\LOCAL SERVICE
TMP %USERPROFILE%\Local Settings\Temp NT AUTHORITY\LOCAL SERVICE
TEMP %USERPROFILE%\Local Settings\Temp NT AUTHORITY\NETWORK SERVICE
TMP %USERPROFILE%\Local Settings\Temp NT AUTHORITY\NETWORK SERVICE
TEMP %USERPROFILE%\Local Settings\Temp PUMA\Administrator
TMP %USERPROFILE%\Local Settings\Temp PUMA\Administrator

[Print Jobs]

Document Size Owner Notify Status Time Submitted
Start Time Until Time Elapsed Time Pages Printed
Job ID Priority Parameters Driver Print Processor
Host Print Queue Data Type Name

[Network Connections]

Local Name Remote Name Type Status User Name
Not Available \\inforb\audit_fdr Disk Current Connection PUMA\dpol

[Running Tasks]

Name Path Process ID Priority Min Working Set Max Working Set Start Time Version Size File Date
system idle process Not Available 0 0 Not Available Not Available Not Available Not Available Not Available
system Not Available 4 8 0 1413120 Not Available Not Available Not Available Not Available
smss.exe Not Available 472 11 204800 1413120 10/26/2005 9:30 AM Not Available Not Available Not Available
csrss.exe Not Available 560 13 Not Available Not Available 10/26/2005 9:30 AM Not Available Not Available Not Available
winlogon.exe c:\windows\system32\winlogon.exe 592 13 204800 1413120 10/26/2005 9:30 AM 5.2.3790.1830 (srv03_sp1_rtm.050324-1447) 901.00 KB (922,624 bytes) 3/25/2005 6:00 AM
services.exe c:\windows\system32\services.exe 644 9 204800 1413120 10/26/2005 9:30 AM 5.2.3790.1830 (srv03_sp1_rtm.050324-1447) 216.50 KB (221,696 bytes) 3/25/2005 6:00 AM
lsass.exe c:\windows\system32\lsass.exe 664 9 204800 1413120 10/26/2005 9:30 AM 5.2.3790.1830 (srv03_sp1_rtm.050324-1447) 14.00 KB (14,336 bytes) 3/25/2005 6:00 AM
svchost.exe c:\windows\system32\svchost.exe 836 8 204800 1413120 10/26/2005 9:30 AM 5.2.3790.1830 (srv03_sp1_rtm.050324-1447) 24.50 KB (25,088 bytes) 3/25/2005 6:00 AM
svchost.exe Not Available 924 8 Not Available Not Available 10/26/2005 9:30 AM Not Available Not Available Not Available
svchost.exe Not Available 980 8 Not Available Not Available 10/26/2005 9:30 AM Not Available Not Available Not Available
svchost.exe Not Available 1016 8 Not Available Not Available 10/26/2005 9:30 AM Not Available Not Available Not Available
svchost.exe c:\windows\system32\svchost.exe 1052 8 204800 1413120 10/26/2005 9:30 AM 5.2.3790.1830 (srv03_sp1_rtm.050324-1447) 24.50 KB (25,088 bytes) 3/25/2005 6:00 AM
msdtc.exe Not Available 1204 8 Not Available Not Available 10/26/2005 9:30 AM Not Available Not Available Not Available
svchost.exe c:\windows\system32\svchost.exe 1336 8 204800 1413120 10/26/2005 9:30 AM 5.2.3790.1830 (srv03_sp1_rtm.050324-1447) 24.50 KB (25,088 bytes) 3/25/2005 6:00 AM
svchost.exe c:\windows\system32\svchost.exe 1612 8 204800 1413120 10/26/2005 9:30 AM 5.2.3790.1830 (srv03_sp1_rtm.050324-1447) 24.50 KB (25,088 bytes) 3/25/2005 6:00 AM
csrss.exe Not Available 212 13 Not Available Not Available 10/26/2005 9:30 AM Not Available Not Available Not Available
winlogon.exe c:\windows\system32\winlogon.exe 248 13 204800 1413120 10/26/2005 9:30 AM 5.2.3790.1830 (srv03_sp1_rtm.050324-1447) 901.00 KB (922,624 bytes) 3/25/2005 6:00 AM
rdpclip.exe c:\windows\system32\rdpclip.exe 608 8 204800 1413120 10/26/2005 9:31 AM 5.2.3790.1830 (srv03_sp1_rtm.050324-1447) 99.00 KB (101,376 bytes) 7/18/2005 4:04 PM
explorer.exe c:\windows\explorer.exe 1032 8 204800 1413120 10/26/2005 9:31 AM 6.00.3790.1830 (srv03_sp1_rtm.050324-1447) 1.30 MB (1,364,480 bytes) 3/25/2005 6:00 AM
wmiprvse.exe Not Available 1960 8 Not Available Not Available 10/26/2005 9:31 AM Not Available Not Available Not Available
logon.scr Not Available 888 4 Not Available Not Available 10/26/2005 9:40 AM Not Available Not Available Not Available
sqlservr.exe c:\program files\microsoft sql server\mssql.1\mssql\binn\sqlservr.exe 2520 8 204800 1413120 10/26/2005 10:59 AM 2005.090.1399.00 37.56 MB (39,379,672 bytes) 9/3/2005 12:12 PM
cmd.exe c:\windows\system32\cmd.exe 3992 8 204800 1413120 10/27/2005 2:50 PM 5.2.3790.1830 (srv03_sp1_rtm.050324-1447) 538.50 KB (551,424 bytes) 3/25/2005 6:00 AM
msinfo32.exe c:\program files\common files\microsoft shared\msinfo\msinfo32.exe 380 8 204800 1413120 10/27/2005 2:51 PM 5.2.3790.1830 (srv03_sp1_rtm.050324-1447) 48.50 KB (49,664 bytes) 7/18/2005 4:05 PM
wmiprvse.exe Not Available 2384 8 Not Available Not Available 10/27/2005 2:51 PM Not Available Not Available Not Available
taskmgr.exe c:\windows\system32\taskmgr.exe 2920 13 204800 1413120 10/27/2005 2:51 PM 5.2.3790.1830 (srv03_sp1_rtm.050324-1447) 231.00 KB (236,544 bytes) 3/25/2005 6:00 AM

[Loaded Modules]

Name Version Size File Date Manufacturer Path

© 2006 Hewlett-Packard Company. All rights reserved.

winlogon 5.2.3790.1830 (srv03_sp1_rtm.050324-1447) 901.00 KB (922,624 bytes) 3/25/2005 6:00 AM Microsoft Corporation c:\windows\system32\winlogon.exe
ntdll 5.2.3790.1830 (srv03_sp1_rtm.050324-1447) 1.20 MB (1,257,472 bytes) 3/25/2005 6:00 AM Microsoft Corporation c:\windows\system32\ntdll.dll
kernel32 5.2.3790.1830 (srv03_sp1_rtm.050324-1447) 1.43 MB (1,500,160 bytes) 3/25/2005 6:00 AM Microsoft Corporation c:\windows\system32\kernel32.dll
advapi32 5.2.3790.1830 (srv03_sp1_rtm.050324-1447) 1.00 MB (1,051,136 bytes) 3/25/2005 6:00 AM Microsoft Corporation c:\windows\system32\advapi32.dll
rpcrt4 5.2.3790.1830 (srv03_sp1_rtm.050324-1447) 1.63 MB (1,714,176 bytes) 3/25/2005 6:00 AM Microsoft Corporation c:\windows\system32\rpcrt4.dll
crypt32 5.131.3790.1830 (srv03_sp1_rtm.050324-1447) 1.36 MB (1,428,992 bytes) 3/25/2005 6:00 AM Microsoft Corporation c:\windows\system32\crypt32.dll
msasn1 5.2.3790.1830 (srv03_sp1_rtm.050324-1447) 152.50 KB (156,160 bytes) 3/25/2005 6:00 AM Microsoft Corporation c:\windows\system32\msasn1.dll
msvcrt 7.0.3790.1830 (srv03_sp1_rtm.050324-1447) 508.00 KB (520,192 bytes) 3/25/2005 6:00 AM Microsoft Corporation c:\windows\system32\msvcrt.dll
user32 5.2.3790.1830 (srv03_sp1_rtm.050324-1447) 1.04 MB (1,085,952 bytes) 3/25/2005 6:00 AM Microsoft Corporation c:\windows\system32\user32.dll
gdi32 5.2.3790.1830 (srv03_sp1_rtm.050324-1447) 592.00 KB (606,208 bytes) 3/25/2005 6:00 AM Microsoft Corporation c:\windows\system32\gdi32.dll
nddeapi 5.2.3790.1830 (srv03_sp1_rtm.050324-1447) 25.00 KB (25,600 bytes) 3/25/2005 6:00 AM Microsoft Corporation c:\windows\system32\nddeapi.dll
profmap 5.2.3790.1830 (srv03_sp1_rtm.050324-1447) 36.00 KB (36,864 bytes) 3/25/2005 6:00 AM Microsoft Corporation c:\windows\system32\profmap.dll
netapi32 5.2.3790.1830 (srv03_sp1_rtm.050324-1447) 589.00 KB (603,136 bytes) 3/25/2005 6:00 AM Microsoft Corporation c:\windows\system32\netapi32.dll
userenv 5.2.3790.1830 (srv03_sp1_rtm.050324-1447) 1.02 MB (1,069,056 bytes) 3/25/2005 6:00 AM Microsoft Corporation c:\windows\system32\userenv.dll
psapi 5.2.3790.1830 (srv03_sp1_rtm.050324-1447) 29.00 KB (29,696 bytes) 3/25/2005 6:00 AM Microsoft Corporation c:\windows\system32\psapi.dll
regapi 5.2.3790.1830 (srv03_sp1_rtm.050324-1447) 108.50 KB (111,104 bytes) 3/25/2005 6:00 AM Microsoft Corporation c:\windows\system32\regapi.dll
secur32 5.2.3790.1830 (srv03_sp1_rtm.050324-1447) 120.00 KB (122,880 bytes) 3/25/2005 6:00 AM Microsoft Corporation c:\windows\system32\secur32.dll
setupapi 5.2.3790.1830 (srv03_sp1_rtm.050324-1447) 1.45 MB (1,523,200 bytes) 3/25/2005 6:00 AM Microsoft Corporation c:\windows\system32\setupapi.dll
version 5.2.3790.1830 (srv03_sp1_rtm.050324-1447) 28.00 KB (28,672 bytes) 3/25/2005 6:00 AM Microsoft Corporation c:\windows\system32\version.dll
winsta 5.2.3790.1830 (srv03_sp1_rtm.050324-1447) 89.00 KB (91,136 bytes) 3/25/2005 6:00 AM Microsoft Corporation c:\windows\system32\winsta.dll
ws2_32 5.2.3790.1830 (srv03_sp1_rtm.050324-1447) 176.50 KB (180,736 bytes) 3/25/2005 6:00 AM Microsoft Corporation c:\windows\system32\ws2_32.dll
ws2help 5.2.3790.1830 (srv03_sp1_rtm.050324-1447) 30.50 KB (31,232 bytes) 3/25/2005 6:00 AM Microsoft Corporation c:\windows\system32\ws2help.dll
msgina 5.2.3790.1830 (srv03_sp1_rtm.050324-1447) 1.14 MB (1,193,472 bytes) 3/25/2005 6:00 AM Microsoft Corporation c:\windows\system32\msgina.dll
shsvcs 6.00.3790.1830 (srv03_sp1_rtm.050324-1447) 193.50 KB (198,144 bytes) 3/25/2005 6:00 AM Microsoft Corporation c:\windows\system32\shsvcs.dll
shlwapi 6.00.3790.1830 (srv03_sp1_rtm.050324-1447) 606.50 KB (621,056 bytes) 3/25/2005 6:00 AM Microsoft Corporation c:\windows\system32\shlwapi.dll
sfc 5.2.3790.1830 (srv03_sp1_rtm.050324-1447) 6.00 KB (6,144 bytes) 3/25/2005 6:00 AM Microsoft Corporation c:\windows\system32\sfc.dll
sfc_os 5.2.3790.1830 (srv03_sp1_rtm.050324-1447) 183.50 KB (187,904 bytes) 3/25/2005 6:00 AM Microsoft Corporation c:\windows\system32\sfc_os.dll
wintrust 5.131.3790.1830 (srv03_sp1_rtm.050324-1447) 297.50 KB (304,640 bytes) 3/25/2005 6:00 AM Microsoft Corporation c:\windows\system32\wintrust.dll
imagehlp 5.2.3790.1830 (srv03_sp1_rtm.050324-1447) 57.50 KB (58,880 bytes) 3/25/2005 6:00 AM Microsoft Corporation c:\windows\system32\imagehlp.dll
ole32 5.2.3790.1830 (srv03_sp1_rtm.050324-1447) 2.43 MB (2,543,616 bytes) 3/25/2005 6:00 AM Microsoft Corporation c:\windows\system32\ole32.dll
comctl32 6.0 (srv03_sp1_rtm.050324-1447) 1.51 MB (1,584,128 bytes) 7/18/2005 10:52 AM Microsoft Corporation c:\windows\winsxs\amd64_microsoft.windows.common-controls_6595b64144ccf1df_6.0.3790.1830_x-ww_aced72af\comctl32.dll

winscard 5.2.3790.1830 (srv03_sp1_rtm.050324-1447) 230.00 KB (235,520 bytes) 3/25/2005 6:00 AM Microsoft Corporation c:\windows\system32\winscard.dll
wtsapi32 5.2.3790.1830 (srv03_sp1_rtm.050324-1447) 29.00 KB (29,696 bytes) 3/25/2005 6:00 AM Microsoft Corporation c:\windows\system32\wtsapi32.dll
winmm 5.2.3790.1830 (srv03_sp1_rtm.050324-1447) 303.50 KB (310,784 bytes) 3/25/2005 6:00 AM Microsoft Corporation c:\windows\system32\winmm.dll
shell32 6.00.3790.1830 (srv03_sp1_rtm.050324-1447) 10.01 MB (10,492,416 bytes) 3/25/2005 6:00 AM Microsoft Corporation c:\windows\system32\shell32.dll
sxs 5.2.3790.1830 (srv03_sp1_rtm.050324-1447) 1.91 MB (2,003,968 bytes) 3/25/2005 6:00 AM Microsoft Corporation c:\windows\system32\sxs.dll
wldap32 5.2.3790.1830 (srv03_sp1_rtm.050324-1447) 390.00 KB (399,360 bytes) 3/25/2005 6:00 AM Microsoft Corporation c:\windows\system32\wldap32.dll
rsaenh 5.2.3790.1830 (srv03_sp1_rtm.050324-1447) 241.96 KB (247,768 bytes) 3/25/2005 6:00 AM Microsoft Corporation c:\windows\system32\rsaenh.dll
cscdll 5.2.3790.1830 (srv03_sp1_rtm.050324-1447) 151.50 KB (155,136 bytes) 3/25/2005 6:00 AM Microsoft Corporation c:\windows\system32\cscdll.dll
dimsntfy 5.2.3790.1830 (srv03_sp1_rtm.050324-1447) 28.00 KB (28,672 bytes) 3/25/2005 6:00 AM Microsoft Corporation c:\windows\system32\dimsntfy.dll
wlnotify 5.2.3790.1830 (srv03_sp1_rtm.050324-1447) 148.00 KB (151,552 bytes) 3/25/2005 6:00 AM Microsoft Corporation c:\windows\system32\wlnotify.dll
mpr 5.2.3790.1830 (srv03_sp1_rtm.050324-1447) 115.00 KB (117,760 bytes) 3/25/2005 6:00 AM Microsoft Corporation c:\windows\system32\mpr.dll
oleaut32 5.2.3790.1830 1.06 MB (1,116,160 bytes) 3/25/2005 6:00 AM Microsoft Corporation c:\windows\system32\oleaut32.dll
winspool 5.2.3790.1830 (srv03_sp1_rtm.050324-1447) 247.00 KB (252,928 bytes) 3/25/2005 6:00 AM Microsoft Corporation c:\windows\system32\winspool.drv
comctl32 5.82 (srv03_sp1_rtm.050324-1447) 934.50 KB (956,928 bytes) 7/18/2005 10:52 AM Microsoft Corporation c:\windows\winsxs\amd64_microsoft.windows.common-controls_6595b64144ccf1df_5.82.3790.1830_x-ww_4d792d2a\comctl32.dll

© 2006 Hewlett-Packard Company. All rights reserved.

uxtheme 6.00.3790.1830 (srv03_sp1_rtm.050324-1447) 494.50 KB (506,368 bytes) 3/25/2005 6:00 AM Microsoft Corporation c:\windows\system32\uxtheme.dll
clbcatq 2001.12.4720.1830 (srv03_sp1_rtm.050324-1447) 865.00 KB (885,760 bytes) 7/18/2005 4:04 PM Microsoft Corporation c:\windows\system32\clbcatq.dll
comres 2001.12.4720.1830 (srv03_sp1_rtm.050324-1447) 779.50 KB (798,208 bytes) 3/25/2005 6:00 AM Microsoft Corporation c:\windows\system32\comres.dll
wbemprox 5.2.3790.1830 (srv03_sp1_rtm.050324-1447) 38.00 KB (38,912 bytes) 7/18/2005 4:04 PM Microsoft Corporation c:\windows\system32\wbem\wbemprox.dll
wbemcomn 5.2.3790.1830 (srv03_sp1_rtm.050324-1447) 524.00 KB (536,576 bytes) 3/25/2005 6:00 AM Microsoft Corporation c:\windows\system32\wbem\wbemcomn.dll
xpsp2res 5.2.3790.1830 (srv03_sp1_rtm.050324-1447) 2.77 MB (2,899,456 bytes) 3/25/2005 6:00 AM Microsoft Corporation c:\windows\system32\xpsp2res.dll
wbemsvc 5.2.3790.1830 (srv03_sp1_rtm.050324-1447) 58.00 KB (59,392 bytes) 7/18/2005 4:04 PM Microsoft Corporation c:\windows\system32\wbem\wbemsvc.dll
fastprox 5.2.3790.1830 (srv03_sp1_rtm.050324-1447) 866.50 KB (887,296 bytes) 7/18/2005 4:04 PM Microsoft Corporation c:\windows\system32\wbem\fastprox.dll
msvcp60 7.0.3790.1830 (srv03_sp1_rtm.050324-1447) 919.50 KB (941,568 bytes) 3/25/2005 6:00 AM Microsoft Corporation c:\windows\system32\msvcp60.dll
ntdsapi 5.2.3790.1830 (srv03_sp1_rtm.050324-1447) 127.50 KB (130,560 bytes) 3/25/2005 6:00 AM Microsoft Corporation c:\windows\system32\ntdsapi.dll
dnsapi 5.2.3790.1830 (srv03_sp1_rtm.050324-1447) 297.50 KB (304,640 bytes) 3/25/2005 6:00 AM Microsoft Corporation c:\windows\system32\dnsapi.dll
services 5.2.3790.1830 (srv03_sp1_rtm.050324-1447) 216.50 KB (221,696 bytes) 3/25/2005 6:00 AM Microsoft Corporation c:\windows\system32\services.exe
ncobjapi 5.2.3790.1830 (srv03_sp1_rtm.050324-1447) 80.00 KB (81,920 bytes) 3/25/2005 6:00 AM Microsoft Corporation c:\windows\system32\ncobjapi.dll
scesrv 5.2.3790.1830 (srv03_sp1_rtm.050324-1447) 594.50 KB (608,768 bytes) 3/25/2005 6:00 AM Microsoft Corporation c:\windows\system32\scesrv.dll
authz 5.2.3790.1830 (srv03_sp1_rtm.050324-1447) 167.00 KB (171,008 bytes) 3/25/2005 6:00 AM Microsoft Corporation c:\windows\system32\authz.dll
umpnpmgr 5.2.3790.1830 (srv03_sp1_rtm.050324-1447) 205.00 KB (209,920 bytes) 3/25/2005 6:00 AM Microsoft Corporation c:\windows\system32\umpnpmgr.dll
eventlog 5.2.3790.1830 (srv03_sp1_rtm.050324-1447) 127.00 KB (130,048 bytes) 3/25/2005 6:00 AM Microsoft Corporation c:\windows\system32\eventlog.dll
lsass 5.2.3790.1830 (srv03_sp1_rtm.050324-1447) 14.00 KB (14,336 bytes) 3/25/2005 6:00 AM Microsoft Corporation c:\windows\system32\lsass.exe
lsasrv 5.2.3790.1830 (srv03_sp1_rtm.050324-1447) 1.50 MB (1,568,256 bytes) 3/25/2005 6:00 AM Microsoft Corporation c:\windows\system32\lsasrv.dll
samlib 5.2.3790.1830 (srv03_sp1_rtm.050324-1447) 69.00 KB (70,656 bytes) 3/25/2005 6:00 AM Microsoft Corporation c:\windows\system32\samlib.dll
samsrv 5.2.3790.1830 (srv03_sp1_rtm.050324-1447) 1.01 MB (1,059,328 bytes) 3/25/2005 6:00 AM Microsoft Corporation c:\windows\system32\samsrv.dll
cryptdll 5.2.3790.1830 (srv03_sp1_rtm.050324-1447) 47.00 KB (48,128 bytes) 3/25/2005 6:00 AM Microsoft Corporation c:\windows\system32\cryptdll.dll
msprivs 5.2.3790.1830 (srv03_sp1_rtm.050324-1447) 47.50 KB (48,640 bytes) 3/25/2005 6:00 AM Microsoft Corporation c:\windows\system32\msprivs.dll
kerberos 5.2.3790.1830 (srv03_sp1_rtm.050324-1447) 698.00 KB (714,752 bytes) 3/25/2005 6:00 AM Microsoft Corporation c:\windows\system32\kerberos.dll
msv1_0 5.2.3790.1830 (srv03_sp1_rtm.050324-1447) 253.00 KB (259,072 bytes) 3/25/2005 6:00 AM Microsoft Corporation c:\windows\system32\msv1_0.dll
iphlpapi 5.2.3790.1830 (srv03_sp1_rtm.050324-1447) 177.00 KB (181,248 bytes) 3/25/2005 6:00 AM Microsoft Corporation c:\windows\system32\iphlpapi.dll
netlogon 5.2.3790.1830 (srv03_sp1_rtm.050324-1447) 666.00 KB (681,984 bytes) 3/25/2005 6:00 AM Microsoft Corporation c:\windows\system32\netlogon.dll
w32time 5.2.3790.1830 (srv03_sp1_rtm.050324-1447) 400.50 KB (410,112 bytes) 3/25/2005 6:00 AM Microsoft Corporation c:\windows\system32\w32time.dll
schannel 5.2.3790.1830 (srv03_sp1_rtm.050324-1447) 248.00 KB (253,952 bytes) 3/25/2005 6:00 AM Microsoft Corporation c:\windows\system32\schannel.dll
wdigest 5.2.3790.1830 (srv03_sp1_rtm.050324-1447) 130.50 KB (133,632 bytes) 3/25/2005 6:00 AM Microsoft Corporation c:\windows\system32\wdigest.dll
rassfm 5.2.3790.1830 (srv03_sp1_rtm.050324-1447) 36.00 KB (36,864 bytes) 3/25/2005 6:00 AM Microsoft Corporation c:\windows\system32\rassfm.dll
kdcsvc 5.2.3790.1830 (srv03_sp1_rtm.050324-1447) 409.00 KB (418,816 bytes) 3/25/2005 6:00 AM Microsoft Corporation c:\windows\system32\kdcsvc.dll
ntdsa 5.2.3790.1830 (srv03_sp1_rtm.050324-1447) 2.81 MB (2,948,096 bytes) 3/25/2005 6:00 AM Microsoft Corporation c:\windows\system32\ntdsa.dll
esent 5.2.3790.1830 (srv03_sp1_rtm.050324-1447) 2.26 MB (2,366,976 bytes) 3/25/2005 6:00 AM Microsoft Corporation c:\windows\system32\esent.dll
ntdsatq 5.2.3790.1830 (srv03_sp1_rtm.050324-1447) 51.00 KB (52,224 bytes) 3/25/2005 6:00 AM Microsoft Corporation c:\windows\system32\ntdsatq.dll
mswsock 5.2.3790.1830 (srv03_sp1_rtm.050324-1447) 478.00 KB (489,472 bytes) 3/25/2005 6:00 AM Microsoft Corporation c:\windows\system32\mswsock.dll
scecli 5.2.3790.1830 (srv03_sp1_rtm.050324-1447) 308.00 KB (315,392 bytes) 3/25/2005 6:00 AM Microsoft Corporation c:\windows\system32\scecli.dll
ws03res 5.2.3790.1830 (srv03_sp1_rtm.050324-1447) 794.00 KB (813,056 bytes) 3/25/2005 6:00 AM Microsoft Corporation c:\windows\system32\ws03res.dll
pstorsvc 5.2.3790.1830 (srv03_sp1_rtm.050324-1447) 36.00 KB (36,864 bytes) 3/25/2005 6:00 AM Microsoft Corporation c:\windows\system32\pstorsvc.dll
psbase 5.2.3790.1830 (srv03_sp1_rtm.050324-1447) 124.00 KB (126,976 bytes) 3/25/2005 6:00 AM Microsoft Corporation c:\windows\system32\psbase.dll
hnetcfg 5.2.3790.1830 (srv03_sp1_rtm.050324-1447) 561.00 KB (574,464 bytes) 3/25/2005 6:00 AM Microsoft Corporation c:\windows\system32\hnetcfg.dll
wshtcpip 5.2.3790.1830 (srv03_sp1_rtm.050324-1447) 29.00 KB (29,696 bytes) 3/25/2005 6:00 AM Microsoft Corporation c:\windows\system32\wshtcpip.dll
dssenh 5.2.3790.1830 (srv03_sp1_rtm.050324-1447) 226.96 KB (232,408 bytes) 3/25/2005 6:00 AM Microsoft Corporation c:\windows\system32\dssenh.dll
svchost 5.2.3790.1830 (srv03_sp1_rtm.050324-1447) 24.50 KB (25,088 bytes) 3/25/2005 6:00 AM Microsoft Corporation c:\windows\system32\svchost.exe
rpcss 5.2.3790.1830 (srv03_sp1_rtm.050324-1447) 672.00 KB (688,128 bytes) 3/25/2005 6:00 AM Microsoft Corporation c:\windows\system32\rpcss.dll
ntmarta 5.2.3790.1830 (srv03_sp1_rtm.050324-1447) 222.50 KB (227,840 bytes) 3/25/2005 6:00 AM Microsoft Corporation c:\windows\system32\ntmarta.dll

© 2006 Hewlett-Packard Company. All rights reserved.

wkssvc 5.2.3790.1830 (srv03_sp1_rtm.050324-1447) 221.00 KB (226,304 bytes) 3/25/2005 6:00 AM Microsoft Corporation c:\windows\system32\wkssvc.dll
wiarpc 5.2.3790.1830 (srv03_sp1_rtm.050324-1447) 57.00 KB (58,368 bytes) 3/25/2005 6:00 AM Microsoft Corporation c:\windows\system32\wiarpc.dll
aelupsvc 5.2.3790.1830 (srv03_sp1_rtm.050324-1447) 31.50 KB (32,256 bytes) 3/25/2005 6:00 AM Microsoft Corporation c:\windows\system32\aelupsvc.dll
apphelp 5.2.3790.1830 (srv03_sp1_rtm.050324-1447) 241.00 KB (246,784 bytes) 3/25/2005 6:00 AM Microsoft Corporation c:\windows\system32\apphelp.dll
cryptsvc 5.2.3790.1830 (srv03_sp1_rtm.050324-1447) 114.00 KB (116,736 bytes) 3/25/2005 6:00 AM Microsoft Corporation c:\windows\system32\cryptsvc.dll
certcli 5.2.3790.1830 (srv03_sp1_rtm.050324-1447) 372.00 KB (380,928 bytes) 3/25/2005 6:00 AM Microsoft Corporation c:\windows\system32\certcli.dll
atl 3.05.2284 96.50 KB (98,816 bytes) 3/25/2005 6:00 AM Microsoft Corporation c:\windows\system32\atl.dll

vssapi 5.2.3790.1830 (srv03_sp1_rtm.050324-1447) 1.26 MB (1,320,960 bytes) 3/25/2005 6:00 AM Microsoft Corporation c:\windows\system32\vssapi.dll
dmserver 5.2.3790.1830 (srv03_sp1_rtm.050324-1447) 36.50 KB (37,376 bytes) 3/25/2005 6:00 AM Microsoft Corporation c:\windows\system32\dmserver.dll
es 2001.12.4720.1830 (srv03_sp1_rtm.050324-1447) 357.00 KB (365,568 bytes) 3/25/2005 6:00 AM Microsoft Corporation c:\windows\system32\es.dll
srvsvc 5.2.3790.1830 (srv03_sp1_rtm.050324-1447) 156.50 KB (160,256 bytes) 3/25/2005 6:00 AM Microsoft Corporation c:\windows\system32\srvsvc.dll
wmisvc 5.2.3790.1830 (srv03_sp1_rtm.050324-1447) 227.00 KB (232,448 bytes) 7/18/2005 4:04 PM Microsoft Corporation c:\windows\system32\wbem\wmisvc.dll
sens 5.2.3790.1830 (srv03_sp1_rtm.050324-1447) 63.50 KB (65,024 bytes) 3/25/2005 6:00 AM Microsoft Corporation c:\windows\system32\sens.dll
comsvcs 2001.12.4720.1830 (srv03_sp1_rtm.050324-1447) 2.06 MB (2,156,544 bytes) 7/18/2005 4:04 PM Microsoft Corporation c:\windows\system32\comsvcs.dll
browser 5.2.3790.1830 (srv03_sp1_rtm.050324-1447) 125.50 KB (128,512 bytes) 3/25/2005 6:00 AM Microsoft Corporation c:\windows\system32\browser.dll
netrap 5.2.3790.1830 (srv03_sp1_rtm.050324-1447) 26.00 KB (26,624 bytes) 3/25/2005 6:00 AM Microsoft Corporation c:\windows\system32\netrap.dll
netman 5.2.3790.1830 (srv03_sp1_rtm.050324-1447) 457.00 KB (467,968 bytes) 3/25/2005 6:00 AM Microsoft Corporation c:\windows\system32\netman.dll
mprapi 5.2.3790.1830 (srv03_sp1_rtm.050324-1447) 154.50 KB (158,208 bytes) 3/25/2005 6:00 AM Microsoft Corporation c:\windows\system32\mprapi.dll
activeds 5.2.3790.1830 (srv03_sp1_rtm.050324-1447) 348.50 KB (356,864 bytes) 3/25/2005 6:00 AM Microsoft Corporation c:\windows\system32\activeds.dll
adsldpc 5.2.3790.1830 (srv03_sp1_rtm.050324-1447) 240.50 KB (246,272 bytes) 3/25/2005 6:00 AM Microsoft Corporation c:\windows\system32\adsldpc.dll
credui 5.2.3790.1830 (srv03_sp1_rtm.050324-1447) 202.00 KB (206,848 bytes) 3/25/2005 6:00 AM Microsoft Corporation c:\windows\system32\credui.dll
rtutils 5.2.3790.1830 (srv03_sp1_rtm.050324-1447) 66.00 KB (67,584 bytes) 3/25/2005 6:00 AM Microsoft Corporation c:\windows\system32\rtutils.dll
netshell 5.2.3790.1830 (srv03_sp1_rtm.050324-1447) 2.32 MB (2,437,120 bytes) 3/25/2005 6:00 AM Microsoft Corporation c:\windows\system32\netshell.dll
clusapi 5.2.3790.1830 (srv03_sp1_rtm.050324-1447) 127.00 KB (130,048 bytes) 3/25/2005 6:00 AM Microsoft Corporation c:\windows\system32\clusapi.dll
rasapi32 5.2.3790.1830 (srv03_sp1_rtm.050324-1447) 410.00 KB (419,840 bytes) 3/25/2005 6:00 AM Microsoft Corporation c:\windows\system32\rasapi32.dll
rasman 5.2.3790.1830 (srv03_sp1_rtm.050324-1447) 95.50 KB (97,792 bytes) 3/25/2005 6:00 AM Microsoft Corporation c:\windows\system32\rasman.dll
tapi32 5.2.3790.1830 (srv03_sp1_rtm.050324-1447) 332.50 KB (340,480 bytes) 3/25/2005 6:00 AM Microsoft Corporation c:\windows\system32\tapi32.dll
wininet 6.00.3790.1830 (srv03_sp1_rtm.050324-1447) 1.13 MB (1,186,304 bytes) 3/25/2005 6:00 AM Microsoft Corporation c:\windows\system32\wininet.dll
wzcsapi 5.2.3790.1830 (srv03_sp1_rtm.050324-1447) 49.00 KB (50,176 bytes) 3/24/2005 11:35 AM Microsoft Corporation c:\windows\system32\wzcsapi.dll
wzcsvc 5.2.3790.1830 (srv03_sp1_rtm.050324-1447) 492.00 KB (503,808 bytes) 3/24/2005 11:35 AM Microsoft Corporation c:\windows\system32\wzcsvc.dll
wmi 5.2.3790.1830 (srv03_sp1_rtm.050324-1447) 5.50 KB (5,632 bytes) 3/25/2005 6:00 AM Microsoft Corporation c:\windows\system32\wmi.dll
dhcpcsvc 5.2.3790.1830 (srv03_sp1_rtm.050324-1447) 219.00 KB (224,256 bytes) 3/25/2005 6:00 AM Microsoft Corporation c:\windows\system32\dhcpcsvc.dll
wbemcore 5.2.3790.1830 (srv03_sp1_rtm.050324-1447) 1.24 MB (1,299,968 bytes) 7/18/2005 4:04 PM Microsoft Corporation c:\windows\system32\wbem\wbemcore.dll
esscli 5.2.3790.1830 (srv03_sp1_rtm.050324-1447) 626.50 KB (641,536 bytes) 7/18/2005 4:04 PM Microsoft Corporation c:\windows\system32\wbem\esscli.dll
wmiutils 5.2.3790.1830 (srv03_sp1_rtm.050324-1447) 171.00 KB (175,104 bytes) 7/18/2005 4:04 PM Microsoft Corporation c:\windows\system32\wbem\wmiutils.dll
repdrvfs 5.2.3790.1830 (srv03_sp1_rtm.050324-1447) 353.50 KB (361,984 bytes) 7/18/2005 4:04 PM Microsoft Corporation c:\windows\system32\wbem\repdrvfs.dll
wmiprvsd 5.2.3790.1830 (srv03_sp1_rtm.050324-1447) 743.00 KB (760,832 bytes) 7/18/2005 4:04 PM Microsoft Corporation c:\windows\system32\wbem\wmiprvsd.dll
wbemess 5.2.3790.1830 (srv03_sp1_rtm.050324-1447) 532.50 KB (545,280 bytes) 7/18/2005 4:04 PM Microsoft Corporation c:\windows\system32\wbem\wbemess.dll
rasdlg 5.2.3790.1830 (srv03_sp1_rtm.050324-1447) 859.50 KB (880,128 bytes) 3/25/2005 6:00 AM Microsoft Corporation c:\windows\system32\rasdlg.dll
rasadhlp 5.2.3790.1830 (srv03_sp1_rtm.050324-1447) 12.00 KB (12,288 bytes) 3/25/2005 6:00 AM Microsoft Corporation c:\windows\system32\rasadhlp.dll
ncprov 5.2.3790.1830 (srv03_sp1_rtm.050324-1447) 73.00 KB (74,752 bytes) 7/18/2005 4:04 PM Microsoft Corporation c:\windows\system32\wbem\ncprov.dll
netcfgx 5.2.3790.1830 (srv03_sp1_rtm.050324-1447) 1.29 MB (1,354,240 bytes) 3/25/2005 6:00 AM Microsoft Corporation c:\windows\system32\netcfgx.dll
winipsec 5.2.3790.1830 (srv03_sp1_rtm.050324-1447) 52.50 KB (53,760 bytes) 3/25/2005 6:00 AM Microsoft Corporation c:\windows\system32\winipsec.dll
ersvc 5.2.3790.1830 (srv03_sp1_rtm.050324-1447) 31.00 KB (31,744 bytes) 3/25/2005 6:00 AM Microsoft Corporation c:\windows\system32\ersvc.dll
termsrv 5.2.3790.1830 (srv03_sp1_rtm.050324-1447) 354.50 KB (363,008 bytes) 7/18/2005 4:04 PM Microsoft Corporation c:\windows\system32\termsrv.dll
icaapi 5.2.3790.1830 (srv03_sp1_rtm.050324-1447) 27.50 KB (28,160 bytes) 7/18/2005 4:04 PM Microsoft Corporation c:\windows\system32\icaapi.dll

© 2006 Hewlett-Packard Company. All rights reserved.

mstlsapi 5.2.3790.1830 (srv03_sp1_rtm.050324-1447) 187.00 KB (191,488 bytes) 3/25/2005 6:00 AM Microsoft Corporation c:\windows\system32\mstlsapi.dll
rdpwsx 5.2.3790.1830 (srv03_sp1_rtm.050324-1447) 170.13 KB (174,216 bytes) 7/18/2005 4:04 PM Microsoft Corporation c:\windows\system32\rdpwsx.dll
rdpsnd 5.2.3790.1830 (srv03_sp1_rtm.050324-1447) 25.00 KB (25,600 bytes) 3/25/2005 6:00 AM Microsoft Corporation c:\windows\system32\rdpsnd.dll
scredir 5.2.3790.1830 (srv03_sp1_rtm.050324-1447) 38.50 KB (39,424 bytes) 3/25/2005 6:00 AM Microsoft Corporation c:\windows\system32\scredir.dll
cscui 5.2.3790.1830 (srv03_sp1_rtm.050324-1447) 441.00 KB (451,584 bytes) 3/25/2005 6:00 AM Microsoft Corporation c:\windows\system32\cscui.dll
msacm32 5.2.3790.1830 (srv03_sp1_rtm.050324-1447) 31.00 KB (31,744 bytes) 3/25/2005 6:00 AM Microsoft Corporation c:\windows\system32\msacm32.drv
msacm32 5.2.3790.1830 (srv03_sp1_rtm.050324-1447) 112.00 KB (114,688 bytes) 3/25/2005 6:00 AM Microsoft Corporation c:\windows\system32\msacm32.dll
imaadp32 5.2.3790.1830 (srv03_sp1_rtm.050324-1447) 24.00 KB (24,576 bytes) 3/25/2005 6:00 AM Microsoft Corporation c:\windows\system32\imaadp32.acm
msadp32 5.2.3790.1830 (srv03_sp1_rtm.050324-1447) 23.50 KB (24,064 bytes) 3/25/2005 6:00 AM Microsoft Corporation c:\windows\system32\msadp32.acm
msg711 5.2.3790.1830 (srv03_sp1_rtm.050324-1447) 13.50 KB (13,824 bytes) 3/25/2005 6:00 AM Microsoft Corporation c:\windows\system32\msg711.acm
msgsm32 5.2.3790.1830 (srv03_sp1_rtm.050324-1447) 34.50 KB (35,328 bytes) 3/25/2005 6:00 AM Microsoft Corporation c:\windows\system32\msgsm32.acm
tssoft32 1.01 13.50 KB (13,824 bytes) 3/25/2005 6:00 AM DSP GROUP, INC. c:\windows\system32\tssoft32.acm

tsd32 1.03 24.50 KB (25,088 bytes) 3/25/2005 6:00 AM DSP GROUP, INC. c:\windows\system32\tsd32.dll
drprov 5.2.3790.1830 (srv03_sp1_rtm.050324-1447) 24.00 KB (24,576 bytes) 3/25/2005 6:00 AM Microsoft Corporation c:\windows\system32\drprov.dll
ntlanman 5.2.3790.1830 (srv03_sp1_rtm.050324-1447) 71.50 KB (73,216 bytes) 3/25/2005 6:00 AM Microsoft Corporation c:\windows\system32\ntlanman.dll
netui0 5.2.3790.1830 (srv03_sp1_rtm.050324-1447) 130.00 KB (133,120 bytes) 3/25/2005 6:00 AM Microsoft Corporation c:\windows\system32\netui0.dll
netui1 5.2.3790.1830 (srv03_sp1_rtm.050324-1447) 338.50 KB (346,624 bytes) 3/25/2005 6:00 AM Microsoft Corporation c:\windows\system32\netui1.dll
davclnt 5.2.3790.1830 (srv03_sp1_rtm.050324-1447) 38.00 KB (38,912 bytes) 3/25/2005 6:00 AM Microsoft Corporation c:\windows\system32\davclnt.dll
rdpclip 5.2.3790.1830 (srv03_sp1_rtm.050324-1447) 99.00 KB (101,376 bytes) 7/18/2005 4:04 PM Microsoft Corporation c:\windows\system32\rdpclip.exe
wsock32 5.2.3790.1830 (srv03_sp1_rtm.050324-1447) 24.50 KB (25,088 bytes) 3/25/2005 6:00 AM Microsoft Corporation c:\windows\system32\wsock32.dll
urlmon 6.00.3790.1830 (srv03_sp1_rtm.050324-1447) 1.02 MB (1,074,176 bytes) 3/25/2005 6:00 AM Microsoft Corporation c:\windows\system32\urlmon.dll
explorer 6.00.3790.1830 (srv03_sp1_rtm.050324-1447) 1.30 MB (1,364,480 bytes) 3/25/2005 6:00 AM Microsoft Corporation c:\windows\explorer.exe
browseui 6.00.3790.1830 (srv03_sp1_rtm.050324-1447) 1.53 MB (1,601,536 bytes) 3/25/2005 6:00 AM Microsoft Corporation c:\windows\system32\browseui.dll
shdocvw 6.00.3790.1830 (srv03_sp1_rtm.050324-1447) 2.30 MB (2,416,128 bytes) 3/25/2005 6:00 AM Microsoft Corporation c:\windows\system32\shdocvw.dll
cryptui 5.131.3790.1830 (srv03_sp1_rtm.050324-1447) 705.50 KB (722,432 bytes) 3/25/2005 6:00 AM Microsoft Corporation c:\windows\system32\cryptui.dll
themeui 6.00.3790.1830 (srv03_sp1_rtm.050324-1447) 530.50 KB (543,232 bytes) 3/25/2005 6:00 AM Microsoft Corporation c:\windows\system32\themeui.dll
msimg32 5.2.3790.1830 (srv03_sp1_rtm.050324-1447) 6.50 KB (6,656 bytes) 3/25/2005 6:00 AM Microsoft Corporation c:\windows\system32\msimg32.dll
linkinfo 5.2.3790.1830 (srv03_sp1_rtm.050324-1447) 30.00 KB (30,720 bytes) 3/25/2005 6:00 AM Microsoft Corporation c:\windows\system32\linkinfo.dll
ntshrui 6.00.3790.1830 (srv03_sp1_rtm.050324-1447) 184.00 KB (188,416 bytes) 3/25/2005 6:00 AM Microsoft Corporation c:\windows\system32\ntshrui.dll
webcheck 6.00.3790.1830 (srv03_sp1_rtm.050324-1447) 439.00 KB (449,536 bytes) 3/25/2005 6:00 AM Microsoft Corporation c:\windows\system32\webcheck.dll
stobject 5.2.3790.1830 (srv03_sp1_rtm.050324-1447) 142.50 KB (145,920 bytes) 3/25/2005 6:00 AM Microsoft Corporation c:\windows\system32\stobject.dll
batmeter 6.00.3790.1830 (srv03_sp1_rtm.050324-1447) 41.50 KB (42,496 bytes) 3/25/2005 6:00 AM Microsoft Corporation c:\windows\system32\batmeter.dll
powrprof 6.00.3790.1830 (srv03_sp1_rtm.050324-1447) 32.50 KB (33,280 bytes) 3/25/2005 6:00 AM Microsoft Corporation c:\windows\system32\powrprof.dll
browselc 6.00.3790.1830 (srv03_sp1_rtm.050324-1447) 63.00 KB (64,512 bytes) 3/25/2005 6:00 AM Microsoft Corporation c:\windows\system32\browselc.dll
shdoclc 6.00.3790.1830 (srv03_sp1_rtm.050324-1447) 589.50 KB (603,648 bytes) 3/25/2005 6:00 AM Microsoft Corporation c:\windows\system32\shdoclc.dll
mprui 5.2.3790.1830 (srv03_sp1_rtm.050324-1447) 67.50 KB (69,120 bytes) 3/25/2005 6:00 AM Microsoft Corporation c:\windows\system32\mprui.dll
netui2 5.2.3790.1830 (srv03_sp1_rtm.050324-1447) 542.00 KB (555,008 bytes) 3/25/2005 6:00 AM Microsoft Corporation c:\windows\system32\netui2.dll
comdlg32 6.00.3790.1830 (srv03_sp1_rtm.050324-1447) 446.50 KB (457,216 bytes) 3/25/2005 6:00 AM Microsoft Corporation c:\windows\system32\comdlg32.dll
netmsg 5.2.3790.1830 (srv03_sp1_rtm.050324-1447) 179.00 KB (183,296 bytes) 3/25/2005 6:00 AM Microsoft Corporation c:\windows\system32\netmsg.dll
netplwiz 5.2.3790.1830 (srv03_sp1_rtm.050324-1447) 938.50 KB (961,024 bytes) 3/25/2005 6:00 AM Microsoft Corporation c:\windows\system32\netplwiz.dll
winrnr 5.2.3790.1830 (srv03_sp1_rtm.050324-1447) 30.00 KB (30,720 bytes) 3/25/2005 6:00 AM Microsoft Corporation c:\windows\system32\winrnr.dll
mydocs 6.00.3790.1830 (srv03_sp1_rtm.050324-1447) 101.00 KB (103,424 bytes) 3/25/2005 6:00 AM Microsoft Corporation c:\windows\system32\mydocs.dll
zipfldr 6.00.3790.1830 (srv03_sp1_rtm.050324-1447) 449.50 KB (460,288 bytes) 3/25/2005 6:00 AM Microsoft Corporation c:\windows\system32\zipfldr.dll
actxprxy 6.00.3790.1830 (srv03_sp1_rtm.050324-1447) 220.50 KB (225,792 bytes) 3/25/2005 6:00 AM Microsoft Corporation c:\windows\system32\actxprxy.dll
sqlservr 2005.090.1399.00 37.56 MB (39,379,672 bytes) 9/3/2005 12:12 PM Microsoft Corporation c:\program files\microsoft sql server\mssql.1\mssql\binn\sqlservr.exe
msvcr80 8.00.50727.26 803.50 KB (822,784 bytes) 8/30/2005 8:50 PM Microsoft Corporation c:\windows\winsxs\amd64_microsoft.vc80.crt_1fc8b3b9a1e18e3b_8.0.50727.26_x-ww_3fe85033\msvcr80.dll

© 2006 Hewlett-Packard Company. All rights reserved.

msvcp80 8.00.50727.26 1.05 MB (1,097,728 bytes)
8/30/2005 8:53 PM Microsoft Corporation
c:\windows\winsxs\amd64_microsoft.vc80.crt_1fc8b3b9a1e18e3
b_8.0.50727.26_x-ww_3fe85033\msvcp80.dll
opends60 2005.090.1314.00 22.21 KB (22,744 bytes) 9/3/2005
12:07 PM Microsoft Corporation c:\program files\microsoft sql
server\mssql.1\mssql\binn\opends60.dll
instapi 2005.090.1314.00 40.71 KB (41,688 bytes) 9/3/2005
12:03 PM Microsoft Corporation c:\program files\microsoft sql
server\90\shared\instapi.dll
sqlevn70 2005.090.1314.00 1.57 MB (1,641,688 bytes) 9/3/2005
12:09 PM Microsoft Corporation c:\program files\microsoft sql
server\mssql.1\mssql\binn\resources\1033\sqlevn70.rll
sqlos 2005.090.1314.00 15.71 KB (16,088 bytes) 9/3/2005
12:10 PM Microsoft Corporation c:\program files\microsoft sql
server\mssql.1\mssql\binn\sqlos.dll
mscoree 2.0.50727.26 (RTM.050727-2600) 441.00 KB (451,584
bytes) 8/30/2005 9:01 PM Microsoft Corporation
c:\windows\system32\mscoree.dll
xolehlp 2001.12.4720.1830 (srv03_sp1_rtm.050324-1447) 10.50 KB
(10,752 bytes) 7/18/2005 4:04 PM Microsoft Corporation
c:\windows\system32\xolehlp.dll
msdtcprx 2001.12.4720.1830 (srv03_sp1_rtm.050324-1447) 805.50
KB (824,832 bytes) 7/18/2005 4:04 PM Microsoft Corporation
c:\windows\system32\msdtcprx.dll
mtxclu 2001.12.4720.1830 (srv03_sp1_rtm.050324-1447) 141.50
KB (144,896 bytes) 3/25/2005 6:00 AM Microsoft Corporation
c:\windows\system32\mtxclu.dll
resutils 5.2.3790.1830 (srv03_sp1_rtm.050324-1447) 98.50 KB
(100,864 bytes) 3/25/2005 6:00 AM Microsoft Corporation
c:\windows\system32\resutils.dll
security 5.2.3790.1830 (srv03_sp1_rtm.050324-1447) 6.00 KB
(6,144 bytes) 3/25/2005 6:00 AM Microsoft Corporation
c:\windows\system32\security.dll
msfte 12.0.5626.1 3.63 MB (3,803,344 bytes)
8/26/2005 5:17 PM Microsoft Corporation
c:\program files\microsoft sql server\mssql.1\mssql\binn\msfte.dll

dbghelp 6.4.0004.3 (vbl_core(jshay).041001-1326) 1.37 MB (1,434,328
bytes) 9/3/2005 12:04 PM Microsoft Corporation
c:\program files\microsoft sql server\90\shared\dbghelp.dll

sqlncli 2005.090.1314.00 3.01 MB (3,152,144 bytes) 9/3/2005
12:12 PM Microsoft Corporation c:\windows\system32\sqlncli.dll

sqlnclir 2005.090.1314.00 201.21 KB (206,040 bytes) 9/3/2005
12:08 PM Microsoft Corporation
c:\windows\system32\sqlnclir.rll
cmd 5.2.3790.1830 (srv03_sp1_rtm.050324-1447) 538.50
KB (551,424 bytes) 3/25/2005 6:00 AM Microsoft Corporation
c:\windows\system32\cmd.exe
msinfo32 5.2.3790.1830 (srv03_sp1_rtm.050324-1447) 48.50 KB
(49,664 bytes) 7/18/2005 4:05 PM Microsoft Corporation
c:\program files\common files\microsoft
shared\msinfo\msinfo32.exe
mfc42u 6.50.9146.0 1.39 MB (1,462,272 bytes)
3/25/2005 6:00 AM Microsoft Corporation
c:\windows\system32\mfc42u.dll
msinfo 5.2.3790.1830 (srv03_sp1_rtm.050324-1447) 636.00
KB (651,264 bytes) 7/18/2005 4:05 PM Microsoft Corporation
c:\windows\pchealth\helpctr\binaries\msinfo.dll
riched32 5.2.3790.1830 (srv03_sp1_rtm.050324-1447) 7.00 KB
(7,168 bytes) 3/25/2005 6:00 AM Microsoft Corporation
c:\windows\system32\riched32.dll
riched20 5.31.23.1224 1.10 MB (1,157,120 bytes)
3/25/2005 6:00 AM Microsoft Corporation
c:\windows\system32\riched20.dll
taskmgr 5.2.3790.1830 (srv03_sp1_rtm.050324-1447) 231.00
KB (236,544 bytes) 3/25/2005 6:00 AM Microsoft Corporation
c:\windows\system32\taskmgr.exe
utildll 5.2.3790.1830 (srv03_sp1_rtm.050324-1447) 37.00 KB
(37,888 bytes) 3/25/2005 6:00 AM Microsoft Corporation
c:\windows\system32\utildll.dll

[Services]

Display Name Name State Start ModeService Type
Path Error Control Start Name Tag ID

Application Experience Lookup Service AeLookupSvc Running
Auto Share Process
c:\windows\system32\svchost.exe -k netsvcs Normal
LocalSystem 0
Alerter Alerter Stopped Disabled Share Process
c:\windows\system32\svchost.exe -k localservice Normal
NT AUTHORITY\LocalService 0
Application Layer Gateway Service ALG Stopped Manual
Own Process c:\windows\system32\alg.exe Normal
NT AUTHORITY\LocalService 0
Application Management AppMgmt Stopped Manual Share
Process c:\windows\system32\svchost.exe -k netsvcs Normal
LocalSystem 0
ASP.NET State Service aspnet_state Stopped Manual
Own Process
c:\windows\microsoft.net\framework64\v2.0.50727\aspnet_state.e
xe Normal NT AUTHORITY\NetworkService 0

Windows Audio AudioSrv Stopped Disabled Share Process
c:\windows\system32\svchost.exe -k netsvcs Normal
LocalSystem 0
Background Intelligent Transfer Service BITS Stopped Manual
Share Process c:\windows\system32\svchost.exe -k
netsvcs Normal LocalSystem 0
Computer Browser Browser Running Auto Share Process
c:\windows\system32\svchost.exe -k netsvcs Normal
LocalSystem 0
Indexing Service CiSvc Stopped Disabled Share Process
c:\windows\system32\cisvc.exe Normal LocalSystem
0
ClipBook ClipSrv Stopped Disabled Own Process
c:\windows\system32\clipsrv.exe Normal LocalSystem
0
.NET Runtime Optimization Service v2.0.50727_X86
clr_optimization_v2.0.50727_32 Stopped Manual Own
Process c:\windows\microsoft.net\framework\v2.0.50727\mscorsvw.exe
Ignore LocalSystem 0
.NET Runtime Optimization Service v2.0.50727_x64
clr_optimization_v2.0.50727_64 Stopped Manual Own
Process
c:\windows\microsoft.net\framework64\v2.0.50727\mscorsvw.ex
e Ignore LocalSystem 0
COM+ System Application COMSysApp Stopped Manual
Own Process c:\windows\system32\dllhost.exe
/processid:{02d4b3f1-fd88-11d1-960d-00805fc79235} Normal
LocalSystem 0
Cryptographic Services CryptSvc Running Auto Share
Process c:\windows\system32\svchost.exe -k netsvcs Normal
LocalSystem 0
DCOM Server Process Launcher DcomLaunch Running Auto
Share Process c:\windows\system32\svchost.exe -k
dcomlaunch Normal LocalSystem 0
Distributed File System Dfs Stopped Manual Own
Process c:\windows\system32\dfssvc.exe Normal LocalSystem
0
DHCP Client Dhcp Stopped Disabled Share Process
c:\windows\system32\svchost.exe -k networkservice Normal
NT AUTHORITY\NetworkService 0
Logical Disk Manager Administrative Service dmadmin Stopped
Manual Share Process

© 2006 Hewlett-Packard Company. All rights reserved.

c:\windows\system32\dmadmin.exe /com Normal
LocalSystem 0
Logical Disk Managerdmserver Running Auto Share Process
c:\windows\system32\svchost.exe -k netsvcs Normal
LocalSystem 0
DNS Client Dnscache Running Auto Share Process
c:\windows\system32\svchost.exe -k networkservice Normal
NT AUTHORITY\NetworkService 0
Error Reporting Service ERSvc Running Auto Share
Process c:\windows\system32\svchost.exe -k winerr Ignore
LocalSystem 0
Event Log Eventlog Running Auto Share Process
c:\windows\system32\services.exe Normal
LocalSystem 0
COM+ Event System EventSystem Running Auto Share
Process c:\windows\system32\svchost.exe -k netsvcs Normal
LocalSystem 0
Help and Support helpsvc Stopped Manual Share Process
c:\windows\system32\svchost.exe -k netsvcs Normal
LocalSystem 0
Human Interface Device Access HidServ Stopped Disabled Share
Process c:\windows\system32\svchost.exe -k netsvcs Normal
LocalSystem 0
HTTP SSLHTTPFilter Stopped Manual Share Process
c:\windows\system32\lsass.exe Normal LocalSystem
0
IAS Jet Database Access IASJet Stopped Manual Share
Process c:\windows\syswow64\svchost.exe -k iasjet Normal
LocalSystem 0
IMAPI CD-Burning COM Service ImapiService Stopped
Disabled Own Process c:\windows\system32\imapi.exe
Normal LocalSystem 0
Intersite Messaging IsmServ Stopped Disabled Own Process
c:\windows\system32\ismserv.exe Normal
LocalSystem 0
Kerberos Key Distribution Center kdc Stopped Disabled
Share Process c:\windows\system32\lsass.exe Normal
LocalSystem 0
Server lanmanserver Running Auto Share Process
c:\windows\system32\svchost.exe -k netsvcs Normal
LocalSystem 0
Workstation lanmanworkstation Running Auto Share
Process c:\windows\system32\svchost.exe -k netsvcs Normal
LocalSystem 0
License Logging LicenseService Stopped Disabled Own
Process c:\windows\system32\llssrv.exe Normal NT
AUTHORITY\NetworkService 0
TCP/IP NetBIOS Helper LmHosts Running Auto Share
Process c:\windows\system32\svchost.exe -k localservice Normal
NT AUTHORITY\LocalService 0
Messenger Messenger Stopped Disabled Share Process
c:\windows\system32\svchost.exe -k netsvcs Normal
LocalSystem 0
NetMeeting Remote Desktop Sharing mnmsrvc Stopped Disabled
Own Process c:\windows\system32\mnmsrvc.exe
Normal LocalSystem 0
Distributed Transaction Coordinator MSDTC Running Auto
Own Process c:\windows\system32\msdtc.exe Normal
NT AUTHORITY\NetworkService 0
SQL Server FullText Search (MSSQLSERVER) msftesql Stopped
Disabled Own Process "c:\program files\microsoft sql
server\mssql.1\mssql\binn\msftesql.exe" -s:mssql.1 -f:mssqlserver Normal
.\Administrator 0
Windows Installer MSIServer Stopped Manual Share Process
c:\windows\system32\msiexec.exe /v Normal
LocalSystem 0
SQL Server (MSSQLSERVER) MSSQLSERVER Stopped Manual
Own Process "c:\program files\microsoft sql
server\mssql.1\mssql\binn\sqlservr.exe" -smssqlserver Normal
.\Administrator 0
SQL Server Active Directory Helper MSSQLServerADHelper
Stopped Disabled Own Process "c:\program
files\microsoft sql server\90\shared\sqladhlp90.exe" Normal NT
AUTHORITY\NetworkService 0
Network DDE NetDDE Stopped Disabled Share Process
c:\windows\system32\netdde.exe Normal LocalSystem
0
Network DDE DSDMNetDDEdsdm Stopped Disabled Share
Process c:\windows\system32\netdde.exe Normal LocalSystem
0
Net Logon Netlogon Stopped Manual Share Process
c:\windows\system32\lsass.exe Normal LocalSystem
0
Network Connections Netman Running Manual Share Process
c:\windows\system32\svchost.exe -k netsvcs Normal
LocalSystem 0
Network Location Awareness (NLA) Nla Running Manual
Share Process c:\windows\system32\svchost.exe -k
netsvcs Normal LocalSystem 0
File Replication NtFrs Stopped Manual Own Process
c:\windows\system32\ntfrs.exe Ignore LocalSystem
0
NT LM Security Support Provider NtLmSsp Stopped Manual
Share Process c:\windows\system32\lsass.exe Normal
LocalSystem 0
Removable Storage NtmsSvc Stopped Manual Share Process
c:\windows\system32\svchost.exe -k netsvcs Normal
LocalSystem 0
Office Source Engine ose Stopped Manual Own Process
"c:\program files (x86)\common files\microsoft shared\source
engine\ose.exe" Normal LocalSystem 0
Plug and Play PlugPlay Running Auto Share Process
c:\windows\system32\services.exe Normal
LocalSystem 0
IPSEC Services PolicyAgent Stopped Disabled Share
Process c:\windows\system32\lsass.exe Normal LocalSystem
0
Protected Storage ProtectedStorage Running Auto Share
Process c:\windows\system32\lsass.exe Normal LocalSystem
0
Remote Access Auto Connection Manager RasAuto Stopped Manual
Share Process c:\windows\system32\svchost.exe -k
netsvcs Normal LocalSystem 0
Remote Access Connection Manager RasMan Stopped Manual
Share Process c:\windows\system32\svchost.exe -k
netsvcs Normal LocalSystem 0
Remote Desktop Help Session Manager RDSessMgr Stopped
Manual Own Process
c:\windows\system32\sessmgr.exe Normal
LocalSystem 0
Routing and Remote Access RemoteAccess Stopped Disabled
Share Process c:\windows\system32\svchost.exe -k
netsvcs Normal LocalSystem 0
Remote Registry RemoteRegistry Stopped Disabled Share
Process c:\windows\system32\svchost.exe -k regsvc Normal NT
AUTHORITY\LocalService 0
Remote Procedure Call (RPC) Locator RpcLocator Stopped
Manual Own Process
c:\windows\system32\locator.exe Normal NT
AUTHORITY\NetworkService 0
Remote Procedure Call (RPC) RpcSs Running Auto Share
Process c:\windows\system32\svchost.exe -k rpcss Normal NT
AUTHORITY\NetworkService 0
Resultant Set of Policy Provider RSoPProv Stopped Manual Share
Process c:\windows\system32\rsopprov.exe Normal
LocalSystem 0
Special Administration Console Helper sacsvr Stopped Manual
Share Process c:\windows\system32\svchost.exe -k
netsvcs Normal LocalSystem 0

© 2006 Hewlett-Packard Company. All rights reserved.

Security Accounts Manager SamSs Running Auto Share
Process c:\windows\system32\lsass.exe Normal LocalSystem
0
Smart Card SCardSvr Stopped Manual Share Process
c:\windows\system32\scardsvr.exe Ignore NT
AUTHORITY\LocalService 0
Task Scheduler Schedule Stopped Disabled Share Process
c:\windows\system32\svchost.exe -k netsvcs Normal
LocalSystem 0
Secondary Logon seclogon Stopped Disabled Share Process
c:\windows\system32\svchost.exe -k netsvcs Ignore
LocalSystem 0
System Event Notification SENS Running Auto Share
Process c:\windows\system32\svchost.exe -k netsvcs Normal
LocalSystem 0
Windows Firewall/Internet Connection Sharing (ICS) SharedAccess
Stopped Disabled Share Process
c:\windows\system32\svchost.exe -k netsvcs Normal
LocalSystem 0
Shell Hardware Detection ShellHWDetection Running Auto
Share Process c:\windows\system32\svchost.exe -k
netsvcs Ignore LocalSystem 0
Print Spooler Spooler Stopped Disabled Own Process
c:\windows\system32\spoolsv.exe Normal
LocalSystem 0
SQL Server Browser SQLBrowser Stopped Disabled Own
Process "c:\program files (x86)\microsoft sql
server\90\shared\sqlbrowser.exe" Normal .\Administrator 0

SQL Server Agent (MSSQLSERVER) SQLSERVERAGENT
Stopped Manual Own Process "c:\program
files\microsoft sql server\mssql.1\mssql\binn\sqlagent90.exe" -i mssqlserver
Normal .\Administrator 0
SQL Server VSS Writer SQLWriterStopped Manual Own
Process "c:\program files\microsoft sql server\90\shared\sqlwriter.exe"
Normal LocalSystem 0
Windows Image Acquisition (WIA) stisvc Stopped Disabled
Share Process c:\windows\system32\svchost.exe -k
imgsvc Normal NT AUTHORITY\LocalService 0
Microsoft Software Shadow Copy Provider swprv Stopped Manual
Own Process c:\windows\system32\svchost.exe -k swprv
Normal LocalSystem 0
Performance Logs and Alerts SysmonLog Stopped Manual
Own Process c:\windows\system32\smlogsvc.exe
Normal NT Authority\NetworkService 0
Telephony TapiSrv Stopped Manual Share Process
c:\windows\system32\svchost.exe -k tapisrv Normal
LocalSystem 0
Terminal Services TermService Running Manual Share
Process c:\windows\system32\svchost.exe -k termsvcs Normal
LocalSystem 0
Themes Themes Stopped Disabled Share Process
c:\windows\system32\svchost.exe -k netsvcs Normal
LocalSystem 0
Telnet TlntSvr Stopped Disabled Own Process
c:\windows\system32\tlntsvr.exe Normal NT
AUTHORITY\LocalService 0
Distributed Link Tracking Server TrkSvr Stopped Disabled Share
Process c:\windows\system32\svchost.exe -k netsvcs Normal
LocalSystem 0
Distributed Link Tracking Client TrkWks Stopped Disabled Share
Process c:\windows\system32\svchost.exe -k netsvcs Normal
LocalSystem 0
Terminal Services Session Directory Tssdis Stopped Disabled
Own Process c:\windows\system32\tssdis.exe Normal
LocalSystem 0
Windows User Mode Driver Framework UMWdf Stopped Manual
Own Process c:\windows\system32\wdfmgr.exe
Normal NT AUTHORITY\LocalService 0
Uninterruptible Power Supply UPS Stopped Manual Own
Process c:\windows\system32\ups.exe Normal NT
AUTHORITY\LocalService 0
Virtual Disk Service vds Stopped Manual Own Process
c:\windows\system32\vds.exe Normal LocalSystem
0
Volume Shadow Copy VSS Stopped Manual Own
Process c:\windows\system32\vssvc.exe Normal LocalSystem
0
Windows Time W32Time Running Auto Share Process
c:\windows\system32\svchost.exe -k localservice Normal
NT AUTHORITY\LocalService 0
WebClient WebClient Stopped Disabled Share Process
c:\windows\system32\svchost.exe -k localservice Normal
NT AUTHORITY\LocalService 0
WinHTTP Web Proxy Auto-Discovery Service
WinHttpAutoProxySvc Stopped Manual Share
Process c:\windows\system32\svchost.exe -k localservice Normal
NT AUTHORITY\LocalService 0
Windows Management Instrumentation winmgmt Running Auto
Share Process c:\windows\system32\svchost.exe -k
netsvcs Ignore LocalSystem 0
Portable Media Serial Number Service WmdmPmSN Stopped
Manual Share Process
c:\windows\system32\svchost.exe -k netsvcs Normal
LocalSystem 0
Windows Management Instrumentation Driver Extensions Wmi
Stopped Manual Share Process
c:\windows\system32\svchost.exe -k netsvcs Normal
LocalSystem 0
WMI Performance Adapter WmiApSrv Stopped Manual
Own Process c:\windows\system32\wbem\wmiapsrv.exe
Normal LocalSystem 0
Automatic Updates wuauserv Stopped Disabled Share Process
c:\windows\system32\svchost.exe -k netsvcs Normal
LocalSystem 0
Wireless Configuration WZCSVC Stopped Disabled Share
Process c:\windows\system32\svchost.exe -k netsvcs Normal
LocalSystem 0
Network Provisioning Service xmlprov Stopped Manual Share
Process c:\windows\system32\svchost.exe -k netsvcs Normal
LocalSystem 0

[Program Groups]

Group Name Name User Name
Accessories Default User:Accessories Default User

Accessories\Accessibility Default User:Accessories\Accessibility
Default User
Accessories\Entertainment Default User:Accessories\Entertainment
Default User
Startup Default User:Startup Default User
Accessories All Users:Accessories All Users
Accessories\Accessibility All Users:Accessories\Accessibility
All Users
Accessories\Communications All Users:Accessories\Communications
All Users
Accessories\Entertainment All Users:Accessories\Entertainment
All Users
Accessories\System Tools All Users:Accessories\System Tools
All Users
Administrative Tools All Users:Administrative Tools All Users
HP System Tools All Users:HP System Tools All Users
HP System Tools\HP Array Configuration Utility All Users:HP
System Tools\HP Array Configuration Utility All Users
Microsoft SQL Server 2005 CTP All Users:Microsoft SQL Server 2005 CTP
All Users
Microsoft SQL Server 2005 CTP\Analysis Services All Users:Microsoft
SQL Server 2005 CTP\Analysis Services All Users

© 2006 Hewlett-Packard Company. All rights reserved.

Microsoft SQL Server 2005 CTP\Configuration Tools All Users:Microsoft SQL Server 2005 CTP\Configuration Tools All Users
Microsoft SQL Server 2005 CTP\Documentation and Tutorials All Users:Microsoft SQL Server 2005 CTP\Documentation and Tutorials
All Users
Microsoft SQL Server 2005 CTP\Documentation and Tutorials\Tutorials
All Users:Microsoft SQL Server 2005 CTP\Documentation and Tutorials\Tutorials All Users
Microsoft SQL Server 2005 CTP\Performance Tools All Users:Microsoft SQL Server 2005 CTP\Performance Tools All Users
Startup All Users:Startup All Users
Accessories NT AUTHORITY\SYSTEM:Accessories NT AUTHORITY\SYSTEM
Accessories\Accessibility NT AUTHORITY\SYSTEM:Accessories\Accessibility NT AUTHORITY\SYSTEM
Accessories\Entertainment NT AUTHORITY\SYSTEM:Accessories\Entertainment NT AUTHORITY\SYSTEM
Startup NT AUTHORITY\SYSTEM:Startup NT AUTHORITY\SYSTEM
Accessories PUMA\Administrator:Accessories
PUMA\Administrator
Accessories\Accessibility
PUMA\Administrator:Accessories\Accessibility
PUMA\Administrator
Accessories\Entertainment
PUMA\Administrator:Accessories\Entertainment
PUMA\Administrator
Administrative Tools PUMA\Administrator:Administrative Tools
PUMA\Administrator
Startup PUMA\Administrator:Startup PUMA\Administrator

[Startup Programs]

Program	Command	User Name	Location
desktop	desktop.ini	NT AUTHORITY\SYSTEM	Startup
desktop	desktop.ini	PUMA\Administrator	Startup
desktop	desktop.ini	.DEFAULT	Startup
desktop	desktop.ini	All Users	Common Startup

[OLE Registration]

Object	Local Server
Sound (OLE2)	sndrec32.exe
Media Clip	mplay32.exe
Video Clip	mplay32.exe /avi
MIDI Sequence	mplay32.exe /mid
Sound	Not Available
Media Clip	Not Available
WordPad Document	"%programfiles%\windows nt\accessories\wordpad.exe"
Bitmap Image	mspaint.exe

[Windows Error Reporting]

Time	Type	Details

[Internet Settings]

[Internet Explorer]

[Following are sub-categories of this main category]
[Summary]

Item	Value
Version	6.0.3790.1830
Build	63790.1830
Application Path	C:\Program Files\Internet Explorer
Language	English (United States)
Active Printer	Not Available
Cipher Strength	128-bit
Content Advisor	Disabled
IEAK Install	No

[File Versions]

File	Version	Size	Date	Path	Company
actxprxy.dll	6.0.3790.1830	221 KB	3/25/2005 7:00:00 AM	C:\WINDOWS\system32	Microsoft Corporation
advpack.dll	6.0.3790.1830	146 KB	3/25/2005 7:00:00 AM	C:\WINDOWS\system32	Microsoft Corporation
asctrls.ocx	6.0.3790.1830	147 KB	3/25/2005 7:00:00 AM	C:\WINDOWS\system32	Microsoft Corporation
browselc.dll	6.0.3790.1830	63 KB	3/25/2005 7:00:00 AM	C:\WINDOWS\system32	Microsoft Corporation
browseui.dll	6.0.3790.1830	1,564 KB	3/25/2005 7:00:00 AM	C:\WINDOWS\system32	Microsoft Corporation
cdfview.dll	6.0.3790.1830	216 KB	3/25/2005 7:00:00 AM	C:\WINDOWS\system32	Microsoft Corporation
comctl32.dll	5.82.3790.1830	935 KB	3/25/2005 7:00:00 AM	C:\WINDOWS\system32	Microsoft Corporation
dxtrans.dll	6.3.3790.1830	320 KB	3/25/2005 7:00:00 AM	C:\WINDOWS\system32	Microsoft Corporation
dxtmsft.dll	6.3.3790.1830	549 KB	3/25/2005 7:00:00 AM	C:\WINDOWS\system32	Microsoft Corporation
iecont.dll	<File Missing>	Not Available	Not Available	Not Available	Not Available
iecontlc.dll	<File Missing>	Not Available	Not Available	Not Available	Not Available
iedkcs32.dll	16.0.3790.1830	417 KB	3/25/2005 7:00:00 AM	C:\WINDOWS\system32	Microsoft Corporation
iepeers.dll	6.0.3790.1830	361 KB	3/25/2005 7:00:00 AM	C:\WINDOWS\system32	Microsoft Corporation
iesetup.dll	6.0.3790.1830	71 KB	3/25/2005 7:00:00 AM	C:\WINDOWS\system32	Microsoft Corporation
ieuinit.inf	Not Available	24 KB	3/25/2005 7:00:00 AM	C:\WINDOWS\system32	Not Available
iexplore.exe	6.0.3790.1830	94 KB	3/25/2005 7:00:00 AM	C:\Program Files\Internet Explorer	Microsoft Corporation
imgutil.dll	6.0.3790.1830	61 KB	3/25/2005 7:00:00 AM	C:\WINDOWS\system32	Microsoft Corporation
inetcpl.cpl	6.0.3790.1830	428 KB	3/25/2005 7:00:00 AM	C:\WINDOWS\system32	Microsoft Corporation
inetcplc.dll	6.0.3790.1830	110 KB	3/25/2005 7:00:00 AM	C:\WINDOWS\system32	Microsoft Corporation
inseng.dll	6.0.3790.1830	147 KB	3/25/2005 7:00:00 AM	C:\WINDOWS\system32	Microsoft Corporation

© 2006 Hewlett-Packard Company. All rights reserved.

mlang.dll 6.0.3790.1830 686 KB 3/25/2005 7:00:00 AM
C:\WINDOWS\system32 Microsoft Corporation

msencode.dll <File Missing> Not Available Not Available Not Available Not Available
mshta.exe 6.0.3790.1830 38 KB 3/25/2005 7:00:00 AM
C:\WINDOWS\system32 Microsoft Corporation

mshtml.dll 6.0.3790.1830 5,790 KB 3/25/2005 7:00:00 AM
C:\WINDOWS\system32 Microsoft Corporation

mshtml.tlb 6.0.3790.1830 1,320 KB 3/25/2005 7:00:00 AM
C:\WINDOWS\system32 Microsoft Corporation

mshtmled.dll 6.0.3790.1830 906 KB 3/25/2005 7:00:00 AM C:\WINDOWS\system32 Microsoft Corporation

mshtmler.dll 6.0.3790.1830 56 KB 3/25/2005 7:00:00 AM C:\WINDOWS\system32 Microsoft Corporation

msident.dll6.0.3790.1830 69 KB 3/25/2005 7:00:00 AM
C:\WINDOWS\system32 Microsoft Corporation

msidntld.dll 6.0.3790.1830 16 KB 3/25/2005 7:00:00 AM C:\WINDOWS\system32 Microsoft Corporation

msieftp.dll 6.0.3790.1830 369 KB 3/25/2005 7:00:00 AM
C:\WINDOWS\system32 Microsoft Corporation

msrating.dll 6.0.3790.1830 240 KB 3/25/2005 7:00:00 AM C:\WINDOWS\system32 Microsoft Corporation

mstime.dll 6.0.3790.1830 878 KB 3/25/2005 7:00:00 AM
C:\WINDOWS\system32 Microsoft Corporation

occache.dll 6.0.3790.1830 126 KB 3/25/2005 7:00:00 AM C:\WINDOWS\system32 Microsoft Corporation

proctexe.ocx <File Missing> Not Available Not Available Not Available Not Available
sendmail.dll 6.0.3790.1830 64 KB 3/25/2005 7:00:00 AM C:\WINDOWS\system32 Microsoft Corporation

shdoclc.dll 6.0.3790.1830 590 KB 3/25/2005 7:00:00 AM
C:\WINDOWS\system32 Microsoft Corporation

shdocvw.dll 6.0.3790.1830 2,360 KB 3/25/2005 7:00:00 AM C:\WINDOWS\system32 Microsoft Corporation

shfolder.dll 6.0.3790.1830 34 KB 3/25/2005 7:00:00 AM C:\WINDOWS\system32 Microsoft Corporation

shlwapi.dll6.0.3790.1830 607 KB 3/25/2005 7:00:00 AM
C:\WINDOWS\system32 Microsoft Corporation

tdc.ocx 1.3.0.3130 91 KB 3/25/2005 7:00:00 AM
C:\WINDOWS\system32 Microsoft Corporation

url.dll 6.0.3790.1830 40 KB 3/25/2005 7:00:00 AM
C:\WINDOWS\system32 Microsoft Corporation

urlmon.dll 6.0.3790.1830 1,049 KB 3/25/2005 7:00:00 AM
C:\WINDOWS\system32 Microsoft Corporation

webcheck.dll 6.0.3790.1830 439 KB 3/25/2005 7:00:00 AM C:\WINDOWS\system32 Microsoft Corporation

wininet.dll 6.0.3790.1830 1,159 KB 3/25/2005 7:00:00 AM
C:\WINDOWS\system32 Microsoft Corporation

[Connectivity]

Item Value
Connection Preference Never dial

LAN Settings

AutoConfigProxy wininet.dll
AutoProxyDetectMode Disabled
AutoConfigURL
Proxy Disabled
ProxyServer
ProxyOverride

[Cache]

[Following are sub-categories of this main category]
[Summary]

Item Value
Page Refresh Type Automatic
Temporary Internet Files Folder C:\Documents and Settings\Administrator\Local Settings\Temporary Internet Files
Total Disk Space Not Available
Available Disk Space Not Available
Maximum Cache Size Not Available
Available Cache Size Not Available

[List of Objects]

Program File Status CodeBase
No cached object information available

[Content]

[Following are sub-categories of this main category]
[Summary]

Item Value
Content Advisor Disabled

[Personal Certificates]

Issued To Issued By Validity Signature Algorithm
No personal certificate information available

[Other People Certificates]

Issued To Issued By Validity Signature Algorithm
No other people certificate information available

[Publishers]

Name
No publisher information available

[Security]

Zone Security Level
My Computer Custom
Local intranet Custom
Trusted sites Custom
Internet High
Restricted sites Custom

© 2006 Hewlett-Packard Company. All rights reserved.

© 2006 Hewlett-Packard Company. All rights reserved.

Appendix B: Database Build Scripts

B.1 CreateDatabase.sql

```
-- CreateDatabase
-- for use with StepMaster
-- Uses FileGroups

--
--          Drop the existing database
--

if exists (select name from sysdatabases where name = '%DBNAME%')
        drop database %DBNAME%

CREATE DATABASE %DBNAME%
ON PRIMARY
(       NAME            = %DBNAME%_root,
        FILENAME        = "c:\dev\tpch100g.mdf",
        SIZE            = 10MB,
        FILEGROWTH      = 10MB),
FILEGROUP       DATA_FG

(name=%DBNAME%_data1,filename='c:\dev\tpch_1\',size=25500mb,filegrowth=0),

(name=%DBNAME%_data2,filename='c:\dev\tpch_2\',size=25500mb,filegrowth=0),

(name=%DBNAME%_data3,filename='c:\dev\tpch_3\',size=25500mb,filegrowth=0),

(name=%DBNAME%_data4,filename='c:\dev\tpch_4\',size=25500mb,filegrowth=0),

(name=%DBNAME%_data5,filename='c:\dev\tpch_5\',size=25500mb,filegrowth=0),

(name=%DBNAME%_data6,filename='c:\dev\tpch_6\',size=25500mb,filegrowth=0),

(name=%DBNAME%_data7,filename='c:\dev\tpch_7\',size=25500mb,filegrowth=0),

(name=%DBNAME%_data8,filename='c:\dev\tpch_8\',size=25500mb,filegrowth=0),

FILEGROUP       LOAD_FG
    (name=%DBNAME%_load1,
filename='z:\load\load1.ldf',size=17000mb,filegrowth=0),
    (name=%DBNAME%_load2,
filename='z:\load\load2.ldf',size=17000mb,filegrowth=0),
    (name=%DBNAME%_load3,
filename='z:\load\load3.ldf',size=17000mb,filegrowth=0),
    (name=%DBNAME%_load4,
filename='z:\load\load4.ldf',size=17000mb,filegrowth=0),
    (name=%DBNAME%_load5,
filename='z:\load\load5.ldf',size=17000mb,filegrowth=0),
    (name=%DBNAME%_load6,
filename='z:\load\load6.ldf',size=17000mb,filegrowth=0),
    (name=%DBNAME%_load7,
filename='z:\load\load7.ldf',size=17000mb,filegrowth=0),
    (name=%DBNAME%_load8,
filename='z:\load\load8.ldf',size=17000mb,filegrowth=0)
LOG ON
(       NAME            = tpchlog1,
        FILENAME        = 'c:\dev\tpchlog\',
        SIZE            = 19500MB,
        FILEGROWTH      = 0)
```

B.2 CreateTables.sql

```
-- File:    CREATETABLES.SQL
--          Microsoft TPC-H Benchmark Kit Ver. 1.00
--          Copyright Microsoft, 1999
--

create table PART
        (P_PARTKEY      int             not null,
         P_TYPE         varchar(25)     not null,
         P_SIZE         int             not null,
         P_BRAND        char(10)  not null,
         P_NAME         varchar(55)     not null,
         P_CONTAINER    char(10)  not null,
         P_MFGR         char(25)  not null,
         P_RETAILPRICE  float           not null,
         P_COMMENT      varchar(23)     not null)
on LOAD_FG

create table SUPPLIER
        (S_SUPPKEY      int             not null,
         S_NATIONKEY    int             not null,
         S_NAME         char(25)  not null,
         S_ADDRESS      varchar(40)     not null,
         S_PHONE        char(15)  not null,
         S_ACCTBAL      float           not null,
         S_COMMENT      varchar(101)    not null,)
on LOAD_FG

create table PARTSUPP
        (PS_PARTKEY     int             not null,
         PS_SUPPKEY     int             not null,
         PS_SUPPLYCOST  float           not null,
         PS_AVAILQTY    int             not null,
         PS_COMMENT     varchar(199)    not null)
on LOAD_FG

create table CUSTOMER
        (C_CUSTKEY      int             not null,
         C_MKTSEGMENT   char(10)  not null,
         C_NATIONKEY    int             not null,
         C_NAME         varchar(25)     not null,
         C_ADDRESS      varchar(40)     not null,
         C_PHONE        char(15)  not null,
         C_ACCTBAL      float           not null,
         C_COMMENT      varchar(117)    not null)
on LOAD_FG

create table ORDERS
        (O_ORDERDATE    datetime  not null,
         O_ORDERKEY     bigint          not null,
         O_CUSTKEY      int             not null,
         O_ORDERPRIORITY char(15) not null,
         O_SHIPPRIORITY int             not null,
         O_CLERK        char(15)  not null,
         O_ORDERSTATUS  char(1)         not null,
         O_TOTALPRICE   float           not null,
         O_COMMENT      varchar(79)     not null)
```


© 2006 Hewlett-Packard Company. All rights reserved.

```
on LOAD_FG

create table LINEITEM
        (L_SHIPDATE      datetime   not null,
         L_ORDERKEY      bigint                 not null,
         L_DISCOUNT      float                  not null,
         L_EXTENDEDPRICE float                  not null,
         L_SUPPKEY       int                    not null,
         L_QUANTITY      float                  not null,
         L_RETURNFLAG    char(1)                not null,
         L_PARTKEY       int                    not null,
         L_LINESTATUS    char(1)                not null,
         L_TAX           float                  not null,
         L_COMMITDATE    datetime   not null,
         L_RECEIPTDATE   datetime   not null,
         L_SHIPMODE      char(10)   not null,
         L_LINENUMBER    int                    not null,
         L_SHIPINSTRUCT  char(25)   not null,
         L_COMMENT       varchar(44)            not null)
on LOAD_FG

create table NATION
        (N_NATIONKEY     int                    not null,
         N_NAME          char(25)   not null,
         N_REGIONKEY     int                    not null,
         N_COMMENT       varchar(152)           not null)
on LOAD_FG

create table REGION
        (R_REGIONKEY     int                    not null,
         R_NAME          char(25)   not null,
         R_COMMENT       varchar(152)           not null)
on LOAD_FG
```

B.3 CreateIndexes_1.sql

```
-- File:    CREATECLUSTEREDINDEXES.SQL
--          Microsoft TPC-H Benchmark Kit Ver. 1.00
--          Copyright Microsoft, 1999
--

 alter table NATION add constraint PK_N_NATIONKEY primary key
(N_NATIONKEY)
 ON DATA_FG

 alter table REGION add constraint PK_R_REGIONKEY primary key
(R_REGIONKEY)
 ON DATA_FG

 create index N_REGIONKEY_IDX
      on NATION(N_REGIONKEY)
      with fillfactor=100, SORT_IN_TEMPDB
      on DATA_FG

 alter table PART add constraint PK_P_PARTKEY primary key
(P_PARTKEY)
 ON DATA_FG

 alter table SUPPLIER add constraint PK_S_SUPPKEY primary key
(S_SUPPKEY)
 ON DATA_FG

 create index S_NATIONKEY_IDX
        on SUPPLIER(S_NATIONKEY)
        with fillfactor=100, SORT_IN_TEMPDB
        on DATA_FG

 alter table CUSTOMER add constraint PK_C_CUSTKEY primary key
(C_CUSTKEY)
 ON DATA_FG

 alter table PARTSUPP add constraint PK_PS_PARTKEY_PS_SUPPKEY
primary key (PS_PARTKEY, PS_SUPPKEY)
 ON DATA_FG

 create clustered index O_ORDERDATE_CLUIDX
        on ORDERS(O_ORDERDATE)
        with FILLFACTOR=95,SORT_IN_TEMPDB
        on DATA_FG

 alter table ORDERS add constraint PK_O_ORDERKEY primary key
(O_ORDERKEY)
 WITH (FILLFACTOR = 95)
 ON DATA_FG
```

B.4 CreateIndexes_2.sql

```
-- File:    CREATEINDEXESSTREAM2.SQL
--          Microsoft TPC-H Benchmark Kit Ver. 1.00
--          Copyright Microsoft, 1999
--


 create index PS_SUPPKEY_IDX
      on PARTSUPP(PS_SUPPKEY)
      with fillfactor=100, SORT_IN_TEMPDB
      on DATA_FG

 create clustered index L_SHIPDATE_CLUIDX
        on LINEITEM(L_SHIPDATE)
        with FILLFACTOR=95,SORT_IN_TEMPDB
        on DATA_FG

 create index L_ORDERKEY_IDX
        on LINEITEM(L_ORDERKEY)
        with FILLFACTOR=95,SORT_IN_TEMPDB
        on DATA_FG

 create index L_PARTKEY_IDX
        on LINEITEM(L_PARTKEY)
        with FILLFACTOR=95,SORT_IN_TEMPDB
        on DATA_FG
```

B.5 CreateFK.sql

```
-- create FK
alter table SUPPLIER add constraint FK_S_NATIONKEY foreign key
(S_NATIONKEY) references NATION(N_NATIONKEY)

alter table PARTSUPP add constraint FK_PS_PARTKEY foreign key
(PS_PARTKEY) references PART(P_PARTKEY)

alter table PARTSUPP add constraint FK_PS_SUPPKEY foreign key
(PS_SUPPKEY) references SUPPLIER(S_SUPPKEY)

alter table CUSTOMER add constraint FK_C_NATIONKEY foreign key
(C_NATIONKEY) references NATION (N_NATIONKEY)

alter table ORDERS add constraint FK_O_CUSTKEY foreign key
(O_CUSTKEY)  references CUSTOMER (C_CUSTKEY)

alter table NATION add constraint FK_N_REGIONKEY foreign key
(N_REGIONKEY)  references REGION (R_REGIONKEY)
```


© 2006 Hewlett-Packard Company. All rights reserved.

```
alter table LINEITEM add constraint FK_L_ORDERKEY foreign key
(L_ORDERKEY)  references ORDERS (O_ORDERKEY)

alter table LINEITEM add constraint FK_L_PARTKEY foreign key
(L_PARTKEY)  references PART (P_PARTKEY)

alter table LINEITEM add constraint FK_L_SUPPKEY foreign key
(L_SUPPKEY)  references SUPPLIER (S_SUPPKEY)

alter table LINEITEM add constraint FK_L_PARTKEY_SUPPKEY
foreign key (L_PARTKEY,L_SUPPKEY) references
PARTSUPP(PS_PARTKEY, PS_SUPPKEY)
```

B.6 CreateBackupDevices.sql

```
if exists (select name from sysdevices where name = 'BackupDev1')
        exec sp_dropdevice BackupDev1
GO

if exists (select name from sysdevices where name = 'BackupDev2')
        exec sp_dropdevice BackupDev2
GO

if exists (select name from sysdevices where name = 'BackupDev3')
        exec sp_dropdevice BackupDev3
GO
if exists (select name from sysdevices where name = 'BackupDev4')
        exec sp_dropdevice BackupDev4
GO

if exists (select name from sysdevices where name = 'BackupDev5')
        exec sp_dropdevice BackupDev5
GO

if exists (select name from sysdevices where name = 'BackupDev6')
        exec sp_dropdevice BackupDev6
GO
if exists (select name from sysdevices where name = 'BackupDev7')
        exec sp_dropdevice BackupDev7
GO

if exists (select name from sysdevices where name = 'BackupDev8')
        exec sp_dropdevice BackupDev8
GO

sp_addumpdevice 'disk', 'BackupDev1',
'z:\MS_BACKUP\tpcHbackup1.bak'
GO
sp_addumpdevice 'disk', 'BackupDev2',
'z:\MS_BACKUP\tpcHbackup2.bak'
GO
sp_addumpdevice 'disk', 'BackupDev3',
'z:\MS_BACKUP\tpcHbackup3.bak'
GO
sp_addumpdevice 'disk', 'BackupDev4',
'z:\MS_BACKUP\tpcHbackup4.bak'
GO
sp_addumpdevice 'disk', 'BackupDev5',
'z:\MS_BACKUP\tpcHbackup5.bak'
GO
sp_addumpdevice 'disk', 'BackupDev6',
'z:\MS_BACKUP\tpcHbackup6.bak'
GO
sp_addumpdevice 'disk', 'BackupDev7',
'z:\MS_BACKUP\tpcHbackup7.bak'
GO
sp_addumpdevice 'disk', 'BackupDev8',
'z:\MS_BACKUP\tpcHbackup8.bak'
GO
```

B.7 BackupDatabase.sql

```
--      File:   BACKUPDATABASE.SQL
--              Microsoft TPC-H Benchmark Kit Version 1.00
--              Copyright Microsoft, 1999
--

backup database %DBNAME%
to BackupDev1, BackupDev2, BackupDev3, BackupDev4,
        BackupDev5, BackupDev6, BackupDev7, BackupDev8
with init, maxtransfersize=1048576, BUFFERCOUNT=1000, stats=1
```

B.8 RestoreDatabase.sql

```
--      File:   RESTOREDATABASE.SQL
--              Microsoft TPC-H Benchmark Kit Version 1.00
--              Copyright Microsoft, 1999
--

restore database tpch100g
from BackupDev1, BackupDev2, BackupDev3, BackupDev4,
        BackupDev5, BackupDev6, BackupDev7, BackupDev8
with stats=1, maxtransfersize=1048576, BUFFERCOUNT=1000, replace
```

B.9 MoveTempDB.sql

```
-- File:   MOVETEMPDB.SQL
--         Microsoft TPC-H Benchmark Kit Ver. 2.00
--         Copyright Microsoft, 1999

alter database tempdb modify file
  (name=tempdev,filename='c:\dev\tempdev\',size=125MB)
alter database tempdb modify file
  (name=templog,filename='c:\dev\templog\',size=125MB)
```

B.10 ResizeTempDB.sql

```
-- File:   RESIZETEMPDB.SQL
--         Microsoft TPC-H Benchmark Kit Ver. 2.00
--         Copyright Microsoft, 1999

alter database tempdb modify file
  (name=tempdev, filename='c:\dev\tempdev\',size=12500mb,filegrowth=0)
alter database tempdb modify file
  (name=templog, filename='c:\dev\templog\',size=7500mb,filegrowth=0)
alter database tempdb add file
  (name=tempdev2,
filename='c:\dev\tempdev_2\',size=12500mb,filegrowth=0),
  (name=tempdev3,
filename='c:\dev\tempdev_3\',size=12500mb,filegrowth=0),
  (name=tempdev4,
filename='c:\dev\tempdev_4\',size=12500mb,filegrowth=0),
  (name=tempdev5,
filename='c:\dev\tempdev_5\',size=12500mb,filegrowth=0),
  (name=tempdev6,
filename='c:\dev\tempdev_6\',size=12500mb,filegrowth=0),
```


© 2006 Hewlett-Packard Company. All rights reserved.

```
  (name=tempdev7,
filename='c:\dev\tempdev_7\',size=12500mb,filegrowth=0),
  (name=tempdev8,
filename='c:\dev\tempdev_8\',size=12500mb,filegrowth=0)
```

B.11 DropLoadFg.sql

```
-- Drop the LOAD_FG

ALTER DATABASE %DBNAME% REMOVE FILE
%DBNAME%_load1

ALTER DATABASE %DBNAME% REMOVE FILE
%DBNAME%_load2

ALTER DATABASE %DBNAME% REMOVE FILE
%DBNAME%_load3

ALTER DATABASE %DBNAME% REMOVE FILE
%DBNAME%_load4

ALTER DATABASE %DBNAME% REMOVE FILE
%DBNAME%_load5

ALTER DATABASE %DBNAME% REMOVE FILE
%DBNAME%_load6

ALTER DATABASE %DBNAME% REMOVE FILE
%DBNAME%_load7

ALTER DATABASE %DBNAME% REMOVE FILE
%DBNAME%_load8

ALTER DATABASE %DBNAME% REMOVE FILEGROUP LOAD_FG
```


© 2006 Hewlett-Packard Company. All rights reserved.

Appendix C: Query Text and Output

C.1 Qualification Queries and Output

Qualification Query 1

```
-- using default substitutions


/* TPC_H  Query 1 - Pricing Summary Report */

SELECT  L_RETURNFLAG,
        L_LINESTATUS,
        SUM(L_QUANTITY)
                AS SUM_QTY,
        SUM(L_EXTENDEDPRICE)
        AS SUM_BASE_PRICE,
        SUM(L_EXTENDEDPRICE*(1-L_DISCOUNT))
        AS SUM_DISC_PRICE,
        SUM(L_EXTENDEDPRICE*(1-L_DISCOUNT)*(1+L_TAX))
        AS SUM_CHARGE,
        AVG(L_QUANTITY)
                AS AVG_QTY,
        AVG(L_EXTENDEDPRICE)
        AS AVG_PRICE,
        AVG(L_DISCOUNT)
        AS AVG_DISC,
        COUNT_BIG(*)
        AS COUNT_ORDER
FROM    LINEITEM
WHERE   L_SHIPDATE      <= dateadd(dd, -90, '1998-12-01')
GROUP   BY      L_RETURNFLAG,
                L_LINESTATUS
ORDER   BY      L_RETURNFLAG,
                L_LINESTATUS

L_RETURNFLAG L_LINESTATUS SUM_QTY
SUM_BASE_PRICE      SUM_DISC_PRICE      SUM_CHARGE
AVG_QTY             AVG_PRICE           AVG_DISC
COUNT_ORDER
----------- ------------ ---------------------- ---------------------- ----------------------
------ ---------------------- ---------------------- ---------------------- ------------
------------ --------------------
A           F           37734107.000000         56586554400.730301
53758257134.870041      55909065222.827415      25.522006
38273.129735            0.049985                1478493
N           F           991417.000000           1487504710.380000
1413082168.054097       1469649223.194375       25.516472
38284.467761            0.050093                38854
N           O           74476040.000000         111701729697.739110
106118230307.605260     110367043872.498210     25.502227
38249.117989            0.049997                2920374
R           F           37719753.000000         56568041380.899857
53741292684.604156      55889619119.832260      25.505794
38250.854626            0.050009                1478870

(4 row(s) affected)
```

Qualification Query 2

```
-- using default substitutions

/* TPC_H  Query 2 - Minimum Cost Supplier */

SELECT  TOP 100
        S_ACCTBAL,
        S_NAME,
        N_NAME,
        P_PARTKEY,
        P_MFGR,
        S_ADDRESS,
        S_PHONE,
        S_COMMENT
FROM    PART,
        SUPPLIER,
        PARTSUPP,
        NATION,
        REGION
WHERE   P_PARTKEY       = PS_PARTKEY AND
        S_SUPPKEY       = PS_SUPPKEY AND
        P_SIZE          = 15 AND
        P_TYPE          LIKE '%%BRASS' AND
        S_NATIONKEY     = N_NATIONKEY AND
        N_REGIONKEY     = R_REGIONKEY AND
        R_NAME          = 'EUROPE' AND
        PS_SUPPLYCOST   = (     SELECT
        MIN(PS_SUPPLYCOST)
                                FROM    PARTSUPP,
                                        SUPPLIER,
                                        NATION,
                                        REGION
                                WHERE   P_PARTKEY
        = PS_PARTKEY AND
                                        S_SUPPKEY
        = PS_SUPPKEY AND
                                        S_NATIONKEY
        = N_NATIONKEY AND
                                        N_REGIONKEY
        = R_REGIONKEY AND
                                        R_NAME
        = 'EUROPE'
                                )
ORDER   BY      S_ACCTBAL DESC,
                N_NAME,
                S_NAME,
                P_PARTKEY
S_ACCTBAL       S_NAME          N_NAME
P_PARTKEY   P_MFGR          S_ADDRESS
S_PHONE     S_COMMENT
----------------------- ------------------------- ------------------------- ----------- -----
------------------- ---------------------------------- --------------- ---------------
-------------------------------------------------------------------------------------
9938.530000         Supplier#000005359      UNITED KINGDOM
185358      Manufacturer#4          QKuHYh,vZGiwu2FWEJoLDx04
33-429-790-6131 blithely silent pinto beans are furiously. slyly final deposits
acros
9937.840000         Supplier#000005969      ROMANIA
108438      Manufacturer#1
ANDENSOSmk,miq23Xfb5RWt6dvUcvt6Qa       29-520-692-3537
carefully slow deposits use furiously. slyly ironic platelets above the ironic
9936.220000         Supplier#000005250      UNITED KINGDOM
249         Manufacturer#4          B3rqp0xbSEim4Mpy2RH J               33-
320-228-2957 blithely special packages are. stealthily express deposits
across the closely final instructi
9923.770000         Supplier#000002324      GERMANY
29821       Manufacturer#4          y3OD9UywSTOk                        17-
779-299-1839 quickly express packages breach quiet pinto beans. requ
```


© 2006 Hewlett-Packard Company. All rights reserved.

```
9871.220000          Supplier#000006373      GERMANY
43868     Manufacturer#5          J8fcXWsTqM                    17-813-
485-8637 never silent deposits integrate furiously blit
9870.780000          Supplier#000001286      GERMANY
81285     Manufacturer#2
YKA,E2fjiVd7eUrzp2Ef8j1QxGo2DFnosaTEH    17-516-924-4574 final
theodolites cajole slyly special,
9870.780000          Supplier#000001286      GERMANY
181285    Manufacturer#4
YKA,E2fjiVd7eUrzp2Ef8j1QxGo2DFnosaTEH    17-516-924-4574 final
theodolites cajole slyly special,
9852.520000          Supplier#000008973      RUSSIA                18972
Manufacturer#2          t5L67YdBYYH6o,Vz24jpDyQ9              32-188-
594-7038 quickly regular instructions wake-- carefully unusual braids into
the expres
9847.830000          Supplier#000008097      RUSSIA                130557
Manufacturer#2          xMe97bpE69NzdwLoX                     32-375-640-
3593 slyly regular dependencies sleep slyly furiously express dep
9847.570000          Supplier#000006345      FRANCE                86344
Manufacturer#1          VSt3rzk3qG698u6ld8HhOByvrTcSTSvQlDQDag
16-886-766-7945 silent pinto beans should have to snooze carefully along
the final reques
9847.570000          Supplier#000006345      FRANCE
173827    Manufacturer#2
VSt3rzk3qG698u6ld8HhOByvrTcSTSvQlDQDag   16-886-766-7945 silent
pinto beans should have to snooze carefully along the final reques
9836.930000          Supplier#000007342      RUSSIA                4841
Manufacturer#4          JOlK7C1,7xrEZSSOw                     32-399-414-
5385 final accounts haggle. bold accounts are furiously dugouts. furiously
silent asymptotes are slyly

…… additional rows deleted …..

7887.080000          Supplier#000009792      GERMANY
164759    Manufacturer#3          Y28ITVeYriT3kIGdV2K8fSZ
V2UqT5H1Otz     17-988-938-4296 pending, ironic packages sleep among
the carefully ironic accounts. quickly final accounts
7871.500000          Supplier#000007206      RUSSIA                104695
Manufacturer#1          3w fNCnrVmvJjE95sgWZzvW               32-432-
452-7731 furiously dogged pinto beans cajole. bold, express notornis until
the slyly pending
7852.450000          Supplier#000005864      RUSSIA                8363
Manufacturer#4          WCNfBPZeSXh3h,c                       32-454-883-
3821 blithely regular deposits
7850.660000          Supplier#000001518      UNITED KINGDOM
86501     Manufacturer#1          ONda3YJiHKJOC                 33-
730-383-3892 furiously final accounts wake carefully idle requests. even
dolphins wake acc
7843.520000          Supplier#000006683      FRANCE                11680
Manufacturer#4          2Z0JGkiv01Y00oCFwUGfviIbhzCdy         16-464-
517-8943 carefully bold accounts doub

(100 row(s) affected)
```

Qualification Query 3

```
-- using default substitutions

/* TPC_H  Query 3 - Shipping Priority */

SELECT   TOP 10
         L_ORDERKEY,
         SUM(L_EXTENDEDPRICE*(1-L_DISCOUNT))      AS
REVENUE,
         O_ORDERDATE,
         O_SHIPPRIORITY
FROM     CUSTOMER,
         ORDERS,
         LINEITEM
WHERE    C_MKTSEGMENT   = 'BUILDING' AND
         C_CUSTKEY      = O_CUSTKEY AND
         L_ORDERKEY     = O_ORDERKEY AND
         O_ORDERDATE    < '1995-03-15' AND
         L_SHIPDATE     > '1995-03-15'
GROUP    BY       L_ORDERKEY,
                  O_ORDERDATE,
                  O_SHIPPRIORITY
ORDER    BY       REVENUE DESC,
                  O_ORDERDATE

L_ORDERKEY       REVENUE              O_ORDERDATE
O_SHIPPRIORITY
-------------------- ------------------------ ------------------------ --------------
2456423          406181.011100        1995-03-05 00:00:00.000 0
3459808          405838.698900        1995-03-04 00:00:00.000 0
492164           390324.061000        1995-02-19 00:00:00.000 0
1188320          384537.935900        1995-03-09 00:00:00.000 0
2435712          378673.055800        1995-02-26 00:00:00.000 0
4878020          378376.795200        1995-03-12 00:00:00.000 0
5521732          375153.921500        1995-03-13 00:00:00.000 0
2628192          373133.309400        1995-02-22 00:00:00.000 0
993600           371407.459500        1995-03-05 00:00:00.000 0
2300070          367371.145200        1995-03-13 00:00:00.000 0

(10 row(s) affected)
```

Qualification Query 4

```
-- using default substitutions

/* TPC_H  Query 4 - Order Priority Checking */

SELECT   O_ORDERPRIORITY,
         COUNT(*)                      AS ORDER_COUNT
FROM     ORDERS
WHERE    O_ORDERDATE     >= '1993-07-01' AND
         O_ORDERDATE     < dateadd (mm, 3, '1993-07-01') AND
         EXISTS          (        SELECT   *
                                  FROM     LINEITEM
                                  WHERE    L_ORDERKEY
         = O_ORDERKEY AND
                                           L_COMMITDATE
         < L_RECEIPTDATE
                          )
GROUP    BY       O_ORDERPRIORITY
ORDER    BY       O_ORDERPRIORITY

O_ORDERPRIORITY ORDER_COUNT
--------------- -----------
1-URGENT        10594
2-HIGH          10476
3-MEDIUM        10410
4-NOT SPECIFIED 10556
5-LOW           10487

(5 row(s) affected)
```

Qualification Query 5

```
-- using default substitutions

/* TPC_H  Query 5 - Local Supplier Volume */
```


© 2006 Hewlett-Packard Company. All rights reserved.

```
SELECT   N_NAME,
         SUM(L_EXTENDEDPRICE*(1-L_DISCOUNT))      AS
REVENUE
FROM     CUSTOMER,
         ORDERS,
         LINEITEM,
         SUPPLIER,
         NATION,
         REGION
WHERE    C_CUSTKEY          = O_CUSTKEY AND
         L_ORDERKEY         = O_ORDERKEY AND
         L_SUPPKEY          = S_SUPPKEY AND
         C_NATIONKEY        = S_NATIONKEY AND
         S_NATIONKEY        = N_NATIONKEY AND
         N_REGIONKEY        = R_REGIONKEY AND
         R_NAME             = 'ASIA' AND
         O_ORDERDATE        >= '1994-01-01' AND
         O_ORDERDATE        < DATEADD(YY, 1, '1994-01-01')
GROUP    BY        N_NAME
ORDER    BY        REVENUE DESC

N_NAME                REVENUE
------------------------ ------------------------
INDONESIA              55502041.169700
VIETNAM                55295086.996700
CHINA                 53724494.256600
INDIA                52035512.000200
JAPAN                  45410175.695400

(5 row(s) affected)
```

Qualification Query 6

```
-- using default substitutions

/* TPC_H  Query 6 - Forecasting Revenue Change */

SELECT   SUM(L_EXTENDEDPRICE*L_DISCOUNT)          AS
REVENUE
FROM     LINEITEM
WHERE    L_SHIPDATE         >= '1994-01-01' AND
         L_SHIPDATE         < dateadd (yy, 1, '1994-01-01') AND
         L_DISCOUNT         BETWEEN .06 - 0.01 AND .06 + 0.01
AND
         L_QUANTITY         < 24

REVENUE
------------------------
123141078.228300

(1 row(s) affected)
```

Qualification Query 7

```
-- using default substitutions

/* TPC_H  Query 7 - Volume Shipping */

SELECT   SUPP_NATION,
         CUST_NATION,
         L_YEAR,
         SUM(VOLUME)      AS REVENUE
FROM     (        SELECT   N1.N_NAME
         AS SUPP_NATION,
                          N2.N_NAME
         AS CUST_NATION,
                          datepart(yy,L_SHIPDATE)
         AS L_YEAR,
                          L_EXTENDEDPRICE*(1-L_DISCOUNT)
         AS VOLUME
                  FROM    SUPPLIER,
                          LINEITEM,
                          ORDERS,
                          CUSTOMER,
                          NATION N1,
                          NATION N2
                  WHERE   S_SUPPKEY          = L_SUPPKEY
AND
                          O_ORDERKEY         = L_ORDERKEY
AND
                          C_CUSTKEY          = O_CUSTKEY
AND
                          S_NATIONKEY        =
N1.N_NATIONKEY AND
                          C_NATIONKEY        =
N2.N_NATIONKEY AND
                          (        (N1.N_NAME         =
'FRANCE' AND N2.N_NAME    = 'GERMANY')
                                   OR
                                   (N1.N_NAME         =
'GERMANY'         AND N2.N_NAME    = 'FRANCE')
                          ) AND
                          L_SHIPDATE         BETWEEN '1995-
01-01' AND '1996-12-31'
         )        AS SHIPPING
GROUP    BY       SUPP_NATION,
                  CUST_NATION,
                  L_YEAR
ORDER    BY       SUPP_NATION,
                  CUST_NATION,
                  L_YEAR

SUPP_NATION          CUST_NATION          L_YEAR
REVENUE
------------------------ ------------------------ ----------- ------------------------
FRANCE               GERMANY              1995      54639732.733600
FRANCE               GERMANY              1996      54633083.307600
GERMANY                FRANCE             1995      52531746.669700
GERMANY                FRANCE             1996      52520549.022400

(4 row(s) affected)
```

Qualification Query 8

```
-- using default substitutions

/* TPC_H  Query 8 - National Market Share */

SELECT   O_YEAR,
         SUM(CASE         WHEN     NATION   = 'BRAZIL'
                          THEN     VOLUME
                          ELSE     0
                          END) / SUM(VOLUME)        AS
MKT_SHARE
FROM     (        SELECT   datepart(yy,O_ORDERDATE)
         AS O_YEAR,
                          L_EXTENDEDPRICE * (1-
L_DISCOUNT)       AS VOLUME,
                          N2.N_NAME
                  AS NATION
```


© 2006 Hewlett-Packard Company. All rights reserved.

```
                    FROM    PART,
                            SUPPLIER,
                            LINEITEM,
                            ORDERS,
                            CUSTOMER,
                            NATION N1,
                            NATION N2,
                            REGION
                    WHERE   P_PARTKEY           = L_PARTKEY
AND
                            S_SUPPKEY           = L_SUPPKEY
AND
                            L_ORDERKEY          = O_ORDERKEY
AND
                            O_CUSTKEY           = C_CUSTKEY
AND
                            C_NATIONKEY         =
N1.N_NATIONKEY AND
                            N1.N_REGIONKEY      = R_REGIONKEY
AND
                            R_NAME              = 'AMERICA' AND
                            S_NATIONKEY         =
N2.N_NATIONKEY AND
                            O_ORDERDATE         BETWEEN '1995-
01-01' AND '1996-12-31' AND
                            P_TYPE              = 'ECONOMY
ANODIZED STEEL'
        )           AS      ALL_NATIONS
GROUP   BY          O_YEAR
ORDER   BY          O_YEAR

O_YEAR     MKT_SHARE
---------- ------------------------
1995       0.034436
1996       0.041486

(2 row(s) affected)
```

Qualification Query 9

```
-- using default substitutions

/* TPC_H  Query 9 - Product Type Profit Measure */

SELECT  NATION,
        O_YEAR,
        SUM(AMOUNT)         AS SUM_PROFIT
FROM    (           SELECT  N_NAME
                                    AS NATION,
                            datepart(yy, O_ORDERDATE)
                            AS O_YEAR,
                            L_EXTENDEDPRICE*(1-
L_DISCOUNT)-PS_SUPPLYCOST*L_QUANTITY    AS AMOUNT
                    FROM    PART,
                            SUPPLIER,
                            LINEITEM,
                            PARTSUPP,
                            ORDERS,
                            NATION
                    WHERE   S_SUPPKEY           = L_SUPPKEY
AND
                            PS_SUPPKEY          = L_SUPPKEY
AND
                            PS_PARTKEY          = L_PARTKEY
AND
                            P_PARTKEY           = L_PARTKEY
AND
                            O_ORDERKEY          = L_ORDERKEY
AND
                            S_NATIONKEY         = N_NATIONKEY
AND
                            P_NAME              LIKE '%%green%%'
        )           AS PROFIT
GROUP   BY          NATION,
                    O_YEAR
ORDER   BY          NATION,
                    O_YEAR  DESC

NATION               O_YEAR     SUM_PROFIT
------------------------- ----------- ------------------------
ALGERIA              1998       31342867.234500
ALGERIA              1997       57138193.023300
ALGERIA              1996       56140140.133000
ALGERIA              1995       53051469.653400
ALGERIA              1994       53867582.128600
ALGERIA              1993       54942718.132400
ALGERIA              1992       54628034.712700
ARGENTINA            1998       30211185.708100
ARGENTINA            1997       50805741.752300
ARGENTINA            1996       51923746.575500
ARGENTINA            1995       49298625.766600
ARGENTINA            1994       50835610.109500
ARGENTINA            1993       51646079.177500
ARGENTINA            1992       50410314.994800
BRAZIL               1998       27217924.383200
BRAZIL               1997       48378669.198900
BRAZIL               1996       50482870.357200
BRAZIL               1995       47623383.634900
BRAZIL               1994       47840165.725600
BRAZIL               1993       49054694.035100
BRAZIL               1992       48667639.084200
CANADA               1998       30379833.768500
CANADA               1997       50465052.311400
CANADA               1996       52560501.390400
CANADA               1995       52375332.809200
CANADA               1994       52600364.658700

…… additional rows deleted …….

UNITED STATES        1993       48029946.801400
UNITED STATES        1992       48671944.498300
VIETNAM              1998       30442736.059400
VIETNAM              1997       50309179.794200
VIETNAM              1996       50488161.410000
VIETNAM              1995       49658284.612500
VIETNAM              1994       50596057.260700
VIETNAM              1993       50953919.151900
VIETNAM              1992       49613838.315100

(175 row(s) affected)
```

Qualification Query 10

```
-- using default substitutions

/* TPC_H  Query 10 - Returned Item Reporting */

SELECT  TOP 20
        C_CUSTKEY,
        C_NAME,
        SUM(L_EXTENDEDPRICE*(1-L_DISCOUNT))     AS
REVENUE,
        C_ACCTBAL,
        N_NAME,
```


© 2006 Hewlett-Packard Company. All rights reserved.

```
        C_ADDRESS,
        C_PHONE,
        C_COMMENT
FROM    CUSTOMER,
        ORDERS,
        LINEITEM,
        NATION
WHERE   C_CUSTKEY       = O_CUSTKEY                 AND
        L_ORDERKEY      = O_ORDERKEY                AND
        O_ORDERDATE     >= '1993-10-01'
        AND
        O_ORDERDATE     < dateadd(mm, 3, '1993-10-01')  AND
        L_RETURNFLAG    = 'R'                       AND
        C_NATIONKEY     = N_NATIONKEY
GROUP   BY      C_CUSTKEY,
                C_NAME,
                C_ACCTBAL,
                C_PHONE,
                N_NAME,
                C_ADDRESS,
                C_COMMENT
ORDER   BY      REVENUE         DESC

C_CUSTKEY   C_NAME              REVENUE         C_ACCTBAL
N_NAME              C_ADDRESS                       C_PHONE
C_COMMENT
----------- ------------------------ ------------------------ ------------------------ ------
-------------------- ---------------------------------------- --------------- ----------------
--------------------------------------------------------------------------------------------------
--------
57040       Customer#000057040      734235.245500       632.870000
JAPAN               Eioyzjf4pp                      22-895-641-3466
requests sleep blithely about the furiously i
143347      Customer#000143347      721002.694800       2557.470000
EGYPT               1aReFYv,Kw4                     14-742-935-3718
fluffily bold excuses haggle finally after the u
60838       Customer#000060838      679127.307700       2454.770000
BRAZIL              64EaJ5vMAHWJlBOxJklpNc2RJiWE        12-913-
494-9813 furiously even pinto beans integrate under the ruthless foxes;
ironic, even dolphins across the slyl
101998      Customer#000101998      637029.566700       3790.890000
UNITED KINGDOM      01c9CILnNtfOQYmZj               33-593-
865-6378 accounts doze blithely! enticing, final deposits sleep blithely
special accounts. slyly express accounts pla
125341      Customer#000125341      633508.086000       4983.510000
GERMANY             S29ODD6bceU8QSuuEJznkNaK        17-582-
695-5962 quickly express requests wake quickly blithely
25501       Customer#000025501      620269.784900       7725.040000
ETHIOPIA            W556MXuoiaYCCZamJI,Rn0B4ACUGdkQ8DZ
15-874-808-6793 quickly special requests sleep evenly among the special
deposits. special deposi
115831      Customer#000115831      596423.867200       5098.100000
FRANCE              rFeBbEEyk dl ne7zV5fDrmiq1oK09wV7pxqCgIc 16-
715-386-3788 carefully bold excuses sleep alongside of the thinly idle
84223       Customer#000084223      594998.023900       528.650000
UNITED KINGDOM      nAVZCs6BaWap rrM27N 2qBnzc5WBauxbA
33-442-824-8191 pending, final ideas haggle final requests. unusual, regular
asymptotes affix according to the even foxes.
54289       Customer#000054289      585603.391800       5583.020000
IRAN                vXCxoCsU0Bad5JQI ,oobkZ         20-834-292-
4707 express requests sublate blithely regular requests. regular, even ideas
solve.
39922       Customer#000039922      584878.113400       7321.110000
GERMANY             Zgy4s50l2GKN4pLDPBU8m342gIw6R       17-
147-757-8036 even pinto beans haggle. slyly bold accounts inte
6226        Customer#000006226      576783.760600       2230.090000
UNITED KINGDOM      8gPu8,NPGkfyQQ0hcIYUGPIBWc,ybP5g,
33-657-701-3391 quickly final requests against the regular instructions wake
blithely final instructions. pa
922         Customer#000000922      576767.533300       3869.250000
GERMANY             Az9RFaut7NkPnc5zSD2PwHgVwr4jRzq     17-
945-916-9648 boldly final requests cajole blith
147946      Customer#000147946      576455.132000       2030.130000
ALGERIA             iANyZHjqhyy7Ajah0pTrYyhJ            10-886-956-
3143 furiously even accounts are blithely above the furiousl
115640      Customer#000115640      569341.193300       6436.100000
ARGENTINA           Vtgfia9qI 7EpHgecU1X                11-411-543-
4901 final instructions are slyly according to the
73606       Customer#000073606      568656.857800       1785.670000
JAPAN               xuR0Tro5yChDfOCrjkd2ol              22-437-653-
6966 furiously bold orbits about the furiously busy requests wake across the
furiously quiet theodolites. d
110246      Customer#000110246      566842.981500       7763.350000
VIETNAM             7KzflgX MDOq7sOkI                   31-943-426-
9837 dolphins sleep blithely among the slyly final
142549      Customer#000142549      563537.236800       5085.990000
INDONESIA           ChqEoK43OysjdHbtKCp6dKqjNyvvi9      19-
955-562-2398 regular, unusual dependencies boost slyly; ironic attainments
nag fluffily into the unusual packages?
146149      Customer#000146149      557254.986500       1791.550000
ROMANIA             s87fvzFQpU                          29-744-164-6487
silent, unusual requests detect quickly slyly regul
52528       Customer#000052528      556397.350900       551.790000
ARGENTINA           NFztyTOR10UOJ                       11-208-192-
3205 unusual requests detect. slyly dogged theodolites use slyly. deposit
23431       Customer#000023431      554269.536000       3381.860000
ROMANIA             HgiV0phqhaIa9aydNoIlb               29-915-458-
2654 instructions nag quickly. furiously bold accounts cajol

(20 row(s) affected)
```

Qualification Query 11

```
-- using default substitutions

/* TPC_H  Query 11 - Important Stock Indentification */

SELECT  PS_PARTKEY,
        SUM(PS_SUPPLYCOST*PS_AVAILQTY)          AS
VALUE
FROM    PARTSUPP,
        SUPPLIER,
        NATION
WHERE   PS_SUPPKEY      = S_SUPPKEY     AND
        S_NATIONKEY     = N_NATIONKEY   AND
        N_NAME          = 'GERMANY'
GROUP   BY      PS_PARTKEY
HAVING  SUM(PS_SUPPLYCOST*PS_AVAILQTY) >
                (       SELECT
        SUM(PS_SUPPLYCOST*PS_AVAILQTY) * 0.0001000000
                        FROM    PARTSUPP,
                                SUPPLIER,
                                NATION
                        WHERE   PS_SUPPKEY      =
S_SUPPKEY       AND
                                S_NATIONKEY     =
N_NATIONKEY     AND
                                N_NAME          =
'GERMANY'
                )
ORDER   BY      VALUE   DESC

PS_PARTKEY  VALUE
----------- ------------------------
129760      17538456.860000
166726      16503353.920000
```


© 2006 Hewlett-Packard Company. All rights reserved.

```
191287     16474801.970000
161758     16101755.540000
34452      15983844.720000
139035     15907078.340000
9403       15451755.620000
154358     15212937.880000
38823      15064802.860000
85606      15053957.150000
33354      14408297.400000
154747     14407580.680000
82865      14235489.780000
76094      14094247.040000
222        13937777.740000
121271     13908336.000000
55221      13716120.470000
22819      13666434.280000
76281      13646853.680000
85298      13581154.930000
85158      13554904.000000
139684     13535538.720000
31034      13498025.250000

… additional rows deleted …

122819     7888881.020000
154731     7888301.330000
101674     7879324.600000
51968      7879102.210000
72073      7877736.110000
5182       7874521.730000

(1048 row(s) affected)
```

Qualification Query 12

```
-- using default substitutions

/* TPC_H  Query 12 - Shipping Modes and Order Priority */

SELECT   L_SHIPMODE,
         SUM(      CASE      WHEN O_ORDERPRIORITY  = '1-
URGENT' OR
                                O_ORDERPRIORITY  = '2-HIGH'
                           THEN 1
                           ELSE 0
                   END)      AS HIGH_LINE_COUNT,
         SUM(      CASE      WHEN O_ORDERPRIORITY <> '1-
URGENT' AND
                                O_ORDERPRIORITY <> '2-HIGH'
                           THEN 1
                           ELSE 0
                   END)      AS LOW_LINE_COUNT
FROM     ORDERS,
         LINEITEM
WHERE    O_ORDERKEY        = L_ORDERKEY                AND
         L_SHIPMODE        IN ('MAIL','SHIP')          AND
         L_COMMITDATE      < L_RECEIPTDATE             AND
         L_SHIPDATE        < L_COMMITDATE              AND
         L_RECEIPTDATE     >= '1994-01-01'
         AND
         L_RECEIPTDATE     < dateadd(yy, 1, '1994-01-01')
GROUP    BY        L_SHIPMODE
ORDER    BY        L_SHIPMODE

L_SHIPMODE HIGH_LINE_COUNT LOW_LINE_COUNT
---------- --------------- --------------
MAIL       6202            9324
SHIP       6200            9262

(2 row(s) affected)
```

Qualification Query 13

```
-- using default substitutions

/* TPC_H  Query 13 - Customer Distribution */

SELECT   C_COUNT,
         COUNT(*)          AS CUSTDIST
FROM     (         SELECT  C_CUSTKEY,
                           COUNT(O_ORDERKEY)
                   FROM    CUSTOMER left outer join ORDERS on
                           C_CUSTKEY         = O_CUSTKEY
                   AND
                           O_COMMENT         not like
'%%special%%requests%%'
                   GROUP   BY        C_CUSTKEY
         )         AS C_ORDERS (C_CUSTKEY, C_COUNT)
GROUP    BY        C_COUNT
ORDER    BY        CUSTDIST          DESC,
                   C_COUNT                     DESC

C_COUNT    CUSTDIST
----------- -----------
0          50004
9          6641
10          6566
11          6058
8          5949
12          5553
13          4989
19          4748
7          4707
18          4625
15          4552
17          4530
14          4484
20          4461
16          4323
21          4217
22          3730
6          3334
23          3129
24          2622
25          2079
5          1972
26          1593
27          1185
4          1033
28          869
29          559
3          398
30          373
31          235
2          144
32          128
33          71
34          48
35          33
1          23
36          17
37          7
40          4
38          4
```


© 2006 Hewlett-Packard Company. All rights reserved.

```
39      2
41      1

(42 row(s) affected)
```

Qualification Query 14

```
-- using default substitutions

/* TPC_H  Query 14 - Promotion Effect */

SELECT   100.00 * SUM          (              CASE      WHEN P_TYPE
LIKE 'PROMO%%'
                                                         THEN
L_EXTENDEDPRICE*(1-L_DISCOUNT)
                                                         ELSE 0
                                       END) /
SUM(L_EXTENDEDPRICE*(1-L_DISCOUNT))      AS
PROMO_REVENUE
FROM     LINEITEM,
         PART
WHERE    L_PARTKEY          = P_PARTKEY        AND
         L_SHIPDATE         >= '1995-09-01'                AND
         L_SHIPDATE         < dateadd(mm, 1, '1995-09-01')

PROMO_REVENUE
------------------------
16.380779

(1 row(s) affected)
```

Qualification Query 15

```
-- using default substitutions

/* TPC_H  Query 15 - Create View for Top Supplier Query */

CREATE   VIEW REVENUE0 (SUPPLIER_NO, TOTAL_REVENUE)
AS
SELECT   L_SUPPKEY,
         SUM(L_EXTENDEDPRICE*(1-L_DISCOUNT))
FROM     LINEITEM
WHERE    L_SHIPDATE         >= '1996-01-01' AND
         L_SHIPDATE         < dateadd(mm, 3, '1996-01-01')
GROUP    BY          L_SUPPKEY
GO


/* TPC_H  Query 15 - Top Supplier */

SELECT   S_SUPPKEY,
         S_NAME,
         S_ADDRESS,
         S_PHONE,
         TOTAL_REVENUE
FROM     SUPPLIER,
         REVENUE0
WHERE    S_SUPPKEY          = SUPPLIER_NO AND
         TOTAL_REVENUE  = (         SELECT
         MAX(TOTAL_REVENUE)
                                       FROM      REVENUE0
                                 )
ORDER    BY          S_SUPPKEY

DROP VIEW REVENUE0

S_SUPPKEY   S_NAME                 S_ADDRESS
S_PHONE        TOTAL_REVENUE
----------- ------------------------ ------------------------------------- --------------
- ------------------------
8449       Supplier#000008449       Wp34zim9qYFbVctdW
20-469-856-8873 1772627.208700

(1 row(s) affected)
```

Qualification Query 16

```
-- using default substitutions

/* TPC_H  Query 16 - Parts/Supplier Relationship */

SELECT   P_BRAND,
         P_TYPE,
         P_SIZE,
         COUNT(DISTINCT PS_SUPPKEY)          AS
SUPPLIER_CNT
FROM     PARTSUPP,
         PART
WHERE    P_PARTKEY          = PS_PARTKEY
                  AND
         P_BRAND                       <> 'Brand#45'
                                       AND
         P_TYPE             NOT LIKE 'MEDIUM POLISHED%%'
                                       AND
         P_SIZE             IN (49, 14, 23, 45, 19, 3, 36, 9)    AND
         PS_SUPPKEY         NOT IN    (         SELECT
         S_SUPPKEY
                                                 FROM
         SUPPLIER
                                                 WHERE
         S_COMMENT          LIKE '%%Customer%%Complaints%%'
                                       )
GROUP    BY          P_BRAND,
                     P_TYPE,
                     P_SIZE
ORDER    BY          SUPPLIER_CNT       DESC,
                     P_BRAND,
                     P_TYPE,
                     P_SIZE

P_BRAND    P_TYPE                 P_SIZE     SUPPLIER_CNT
---------- ------------------------ ----------- ------------
Brand#41   MEDIUM BRUSHED TIN       3          28
Brand#54   STANDARD BRUSHED COPPER   14         27
Brand#11   STANDARD BRUSHED TIN      23         24
Brand#11   STANDARD BURNISHED BRASS  36         24
Brand#15   MEDIUM ANODIZED NICKEL    3          24
Brand#15   SMALL ANODIZED BRASS      45         24
Brand#15   SMALL BURNISHED NICKEL    19         24
Brand#21   MEDIUM ANODIZED COPPER    3          24
Brand#22   SMALL BRUSHED NICKEL      3          24
Brand#22   SMALL BURNISHED BRASS     19         24
Brand#25   MEDIUM BURNISHED COPPER   36         24
Brand#31   PROMO POLISHED COPPER     36         24
Brand#33   LARGE POLISHED TIN        23         24
Brand#33   PROMO POLISHED STEEL      14         24

…. Additional rows deleted …..

Brand#52   MEDIUM BRUSHED BRASS      45         3
Brand#53   MEDIUM BRUSHED TIN        45         3
Brand#54   ECONOMY POLISHED BRASS    9          3
```


© 2006 Hewlett-Packard Company. All rights reserved.

```
Brand#55   PROMO PLATED BRASS      19        3
Brand#55   STANDARD PLATED TIN     49        3

(18314 row(s) affected)
```

Qualification Query 17

```
-- using default substitutions

/* TPC_H  Query 17 - Small-Quantity-Order Revenue */

SELECT   SUM(L_EXTENDEDPRICE)/7.0            AS AVG_YEARLY
FROM     LINEITEM,
         PART
WHERE    P_PARTKEY          = L_PARTKEY       AND
         P_BRAND                      = 'Brand#23'
         AND
         P_CONTAINER        = 'MED BOX'                    AND
         L_QUANTITY         <          (      SELECT   0.2 *
AVG(L_QUANTITY)
                                              FROM
         LINEITEM
                                              WHERE
         L_PARTKEY          = P_PARTKEY
                                     )

AVG_YEARLY
------------------------
348406.054286

(1 row(s) affected)
```

Qualification Query 18

```
-- using default substitutions

/* TPC_H  Query 18 - Large Volume Customer */

SELECT   TOP 100
         C_NAME,
         C_CUSTKEY,
         O_ORDERKEY,
         O_ORDERDATE,
         O_TOTALPRICE,
         SUM(L_QUANTITY)
FROM     CUSTOMER,
         ORDERS,
         LINEITEM
WHERE    O_ORDERKEY         IN         (      SELECT
         L_ORDERKEY
                                              FROM
         LINEITEM
                                              GROUP    BY
         L_ORDERKEY HAVING SUM(L_QUANTITY) > 300
                                     )        AND
         C_CUSTKEY          = O_CUSTKEY       AND
         O_ORDERKEY         = L_ORDERKEY
GROUP    BY         C_NAME,
                    C_CUSTKEY,
                    O_ORDERKEY,
                    O_ORDERDATE,
                    O_TOTALPRICE
ORDER    BY         O_TOTALPRICE       DESC,
                    O_ORDERDATE

C_NAME                 C_CUSTKEY   O_ORDERKEY
O_ORDERDATE            O_TOTALPRICE
------------------------ ---------- -------------------- ------------------------ -----------
------------- ------------------------
Customer#000128120     128120      4722021              1994-04-07
00:00:00.000 544089.090000         323.000000
Customer#000144617     144617      3043270              1997-02-12
00:00:00.000 530604.440000         317.000000
Customer#000013940     13940       2232932              1997-04-13
00:00:00.000 522720.610000         304.000000
Customer#000066790     66790       2199712              1996-09-30
00:00:00.000 515531.820000         327.000000
Customer#000046435     46435       4745607              1997-07-03
00:00:00.000 508047.990000         309.000000
Customer#000015272     15272       3883783              1993-07-28
00:00:00.000 500241.330000         302.000000
Customer#000146608     146608      3342468              1994-06-12
00:00:00.000 499794.580000         303.000000
Customer#000096103     96103       5984582              1992-03-16
00:00:00.000 494398.790000         312.000000
Customer#000024341     24341       1474818              1992-11-15
00:00:00.000 491348.260000         302.000000
Customer#000137446     137446      5489475              1997-05-23
00:00:00.000 487763.250000         311.000000
Customer#000107590     107590      4267751              1994-11-04
00:00:00.000 485141.380000         301.000000
Customer#000050008     50008       2366755              1996-12-09
00:00:00.000 483891.260000         302.000000
Customer#000015619     15619       3767271              1996-08-07
00:00:00.000 480083.960000         318.000000
Customer#000077260     77260       1436544              1992-09-12
00:00:00.000 479499.430000         307.000000
Customer#000109379     109379      5746311              1996-10-10
00:00:00.000 478064.110000         302.000000
Customer#000054602     54602       5832321              1997-02-09
00:00:00.000 471220.080000         307.000000
Customer#000105995     105995      2096705              1994-07-03
00:00:00.000 469692.580000         307.000000
Customer#000148885     148885      2942469              1992-05-31
00:00:00.000 469630.440000         313.000000
Customer#000114586     114586      551136               1993-05-19
00:00:00.000 469605.590000         308.000000
Customer#000105260     105260      5296167              1996-09-06
00:00:00.000 469360.570000         303.000000
Customer#000147197     147197      1263015              1997-02-02
00:00:00.000 467149.670000         320.000000
Customer#000064483     64483       2745894              1996-07-04
00:00:00.000 466991.350000         304.000000
Customer#000136573     136573      2761378              1996-05-31
00:00:00.000 461282.730000         301.000000
Customer#000016384     16384       502886               1994-04-12
00:00:00.000 458378.920000         312.000000
Customer#000117919     117919      2869152              1996-06-20
00:00:00.000 456815.920000         317.000000
Customer#000012251     12251       735366               1993-11-24
00:00:00.000 455107.260000         309.000000
Customer#000120098     120098      1971680              1995-06-14
00:00:00.000 453451.230000         308.000000
Customer#000066098     66098       5007490              1992-08-07
00:00:00.000 453436.160000         304.000000
Customer#000117076     117076      4290656              1997-02-05
00:00:00.000 449545.850000         301.000000
Customer#000129379     129379      4720454              1997-06-07
00:00:00.000 448665.790000         303.000000
Customer#000126865     126865      4702759              1994-11-07
00:00:00.000 447606.650000         320.000000
Customer#000088876     88876       983201               1993-12-30
00:00:00.000 446717.460000         304.000000
Customer#000036619     36619       4806726              1995-01-17
00:00:00.000 446704.090000         328.000000
```


© 2006 Hewlett-Packard Company. All rights reserved.

```
Customer#000141823      141823     2806245          1996-12-29
00:00:00.000 446269.120000          310.000000
Customer#000053029      53029      2662214          1993-08-13
00:00:00.000 446144.490000          302.000000
Customer#000018188      18188      3037414          1995-01-25
00:00:00.000 443807.220000          308.000000
Customer#000066533      66533      29158            1995-10-21
00:00:00.000 443576.500000          305.000000
Customer#000037729      37729      4134341          1995-06-29
00:00:00.000 441082.970000          309.000000
Customer#000003566      3566       2329187          1998-01-04
00:00:00.000 439803.360000          304.000000
Customer#000045538      45538      4527553          1994-05-22
00:00:00.000 436275.310000          305.000000
Customer#000081581      81581      4739650          1995-11-04
00:00:00.000 435405.900000          305.000000
Customer#000119989      119989     1544643          1997-09-20
00:00:00.000 434568.250000          320.000000
Customer#000003680      3680       3861123          1998-07-03
00:00:00.000 433525.970000          301.000000
Customer#000113131      113131     967334           1995-12-15
00:00:00.000 432957.750000          301.000000
Customer#000141098      141098     565574           1995-09-24
00:00:00.000 430986.690000          301.000000
Customer#000093392      93392      5200102          1997-01-22
00:00:00.000 425487.510000          304.000000
Customer#000015631      15631      1845057          1994-05-12
00:00:00.000 419879.590000          302.000000
Customer#000112987      112987     4439686          1996-09-17
00:00:00.000 418161.490000          305.000000
Customer#000012599      12599      4259524          1998-02-12
00:00:00.000 415200.610000          304.000000
Customer#000105410      105410     4478371          1996-03-05
00:00:00.000 412754.510000          302.000000
Customer#000149842      149842     5156581          1994-05-30
00:00:00.000 411329.350000          302.000000
Customer#000010129      10129      5849444          1994-03-21
00:00:00.000 409129.850000          309.000000
Customer#000069904      69904      1742403          1996-10-19
00:00:00.000 408513.000000          305.000000
Customer#000017746      17746      6882             1997-04-09
00:00:00.000 408446.930000          303.000000
Customer#000013072      13072      1481925          1998-03-15
00:00:00.000 399195.470000          301.000000
Customer#000082441      82441      857959           1994-02-07
00:00:00.000 382579.740000          305.000000
Customer#000088703      88703      2995076          1994-01-30
00:00:00.000 363812.120000          302.000000

(57 row(s) affected)
```

Qualification Query 19

```
-- using default substitutions

/* TPC_H  Query 19 - Discounted Revenue */

SELECT   SUM(L_EXTENDEDPRICE* (1 - L_DISCOUNT))     AS
REVENUE
FROM     LINEITEM,
         PART
WHERE    (        P_PARTKEY          = L_PARTKEY
                                            AND
                  P_BRAND                   = 'Brand#12'

         AND
                  P_CONTAINER        IN ( 'SM CASE', 'SM BOX',
'SM PACK', 'SM PKG')                AND
                  L_QUANTITY         >= 1
                                            AND
                  L_QUANTITY         <= 1 + 10
                                     AND
                  P_SIZE             BETWEEN 1 AND 5
                                            AND
                  L_SHIPMODE         IN ('AIR', 'AIR REG')
                                     AND
                  L_SHIPINSTRUCT     = 'DELIVER IN PERSON'
         )
         OR
         (        P_PARTKEY          = L_PARTKEY
                                            AND
                  P_BRAND                   = 'Brand#23'

         AND
                  P_CONTAINER        IN ( 'MED BAG', 'MED BOX',
'MED PKG', 'MED PACK')      AND
                  L_QUANTITY         >= 10
                                            AND
                  L_QUANTITY         <= 10 + 10
                                     AND
                  P_SIZE             BETWEEN 1 AND 10
                                            AND
                  L_SHIPMODE         IN ('AIR', 'AIR REG')
                                     AND
                  L_SHIPINSTRUCT     = 'DELIVER IN PERSON'
         )
         OR
         (        P_PARTKEY          = L_PARTKEY
                                            AND
                  P_BRAND                   = 'Brand#34'

         AND
                  P_CONTAINER        IN ( 'LG CASE', 'LG BOX', 'LG
PACK', 'LG PKG')            AND
                  L_QUANTITY         >= 20
                                            AND
                  L_QUANTITY         <= 20 + 10
                                     AND
                  P_SIZE             BETWEEN 1 AND 15
                                            AND
                  L_SHIPMODE         IN ('AIR', 'AIR REG')
                                     AND
                  L_SHIPINSTRUCT     = 'DELIVER IN PERSON'
         )

REVENUE
------------------------
3083843.057800

(1 row(s) affected)
```

Qualification Query 20

```
-- using default substitutions

/* TPC_H  Query 20 - Potential Part Promotion */

SELECT   S_NAME,
         S_ADDRESS
FROM     SUPPLIER,
         NATION
```


© 2006 Hewlett-Packard Company. All rights reserved.

```
WHERE   S_SUPPKEY       IN      (       SELECT
        PS_SUPPKEY
                                        FROM
        PARTSUPP
                                        WHERE
        PS_PARTKEY in   (       SELECT  P_PARTKEY

                        FROM    PART

                        WHERE   P_NAME like 'forest%%'

                )       AND
                                        PS_AVAILQTY
        >       (       SELECT  0.5 * sum(L_QUANTITY)

                        FROM    LINEITEM

                        WHERE   L_PARTKEY       =
PS_PARTKEY      AND

                                L_SUPPKEY       =
PS_SUPPKEY      AND

                                L_SHIPDATE      >= '1994-
01-01'          AND

                                L_SHIPDATE      <
dateadd(yy,1,'1994-01-01')

                )
                                )       AND
        S_NATIONKEY     = N_NATIONKEY   AND
        N_NAME          = 'CANADA'
ORDER   BY      S_NAME
```

```
S_NAME                  S_ADDRESS
------------------------- ----------------------------------------
Supplier#000000020      iybAE,RmTymrZVYaFZva2SH,j
Supplier#000000091
YV45D7TkfdQanOOZ7q9QxkyGUapU1oOWU6q3
Supplier#000000197      YC2Acon6kjY3zj3Fbxs2k4Vdf7X0cd2F
Supplier#000000226      83qOdU2EYRdPQAQhEtn GRZEd
Supplier#000000285      Br7e1nnt1yxrw6ImgpJ7YdhFDjuBf
Supplier#000000378      FfbhyCxWvcPrO8ltp9
Supplier#000000402      i9Sw4DoyMhzhKXCH9By,AYSgmD
Supplier#000000530      0qwCMwobKY OcmLyfRXlagA8ukENJv,
Supplier#000000688      D fw5ocppmZpYBBIPI718hCihLDZ5KhKX
Supplier#000000710      f19YPvOyb QoYwjKC,oPycpGfieBAcwKJo
Supplier#000000736      l6i2nMwVuovfKnuVgaSGK2rDy65DlAFLegiL7
Supplier#000000761      zlSLelQUj2XrvTTFnv7WAcYZGvvMTx882d4
Supplier#000000884      bmhEShejaS
Supplier#000000887      urEaTejH5POADP2ARrf
Supplier#000000935      ij98czM 2KzWe7dDTOxB8sq0UfCdvrX
Supplier#000000975      ,AC e,tBpNwKb5xMUzeohxlRn, hdZJo73gFQF8y
Supplier#000001263      rQWr6nf8ZhB2TAiIDIvo5Io

… additional rows deleted ….

Supplier#000009812      APFRMy3lCbgFga53n5t9DxzFPQPgnjrGt32
Supplier#000009862      rJzweWeN58
Supplier#000009868      ROjGgx5gvtkmnUUoeyy7v
Supplier#000009869
ucLqxzrpBTRMewGSM29t0rNTM30g1Tu3Xgg3mKag
Supplier#000009899      7XdpAHrzr1t,UQFZE
Supplier#000009974      7wJ,J5DKcxSU4Kp1cQLpbcAvB5AsvKT

(204 row(s) affected)
```

Qualification Query 21

```
-- using default substitutions

/* TPC_H  Query 21 - Suppliers Who Kept Orders Waiting */

SELECT  TOP 100
        S_NAME,
        COUNT(*)        AS NUMWAIT
FROM    SUPPLIER,
        LINEITEM L1,
        ORDERS,
        NATION
WHERE   S_SUPPKEY               = L1.L_SUPPKEY
        AND
        O_ORDERKEY              = L1.L_ORDERKEY
        AND
        O_ORDERSTATUS           = 'F'
        AND
        L1.L_RECEIPTDATE        > L1.L_COMMITDATE
        AND
        EXISTS  (       SELECT  *
                        FROM    LINEITEM L2
                        WHERE   L2.L_ORDERKEY   =
L1.L_ORDERKEY   AND
                                L2.L_SUPPKEY    <>
L1.L_SUPPKEY
                )       AND
        NOT EXISTS      (       SELECT  *
                                FROM    LINEITEM L3
                                WHERE   L3.L_ORDERKEY
                = L1.L_ORDERKEY         AND
                                        L3.L_SUPPKEY
                <> L1.L_SUPPKEY         AND

        L3.L_RECEIPTDATE        > L3.L_COMMITDATE
                        )       AND
        S_NATIONKEY     = N_NATIONKEY   AND
        N_NAME          = 'SAUDI ARABIA'
GROUP   BY      S_NAME
ORDER   BY      NUMWAIT         DESC,
                S_NAME
```

```
S_NAME                  NUMWAIT
------------------------- -----------
Supplier#000002829      20
Supplier#000005808      18
Supplier#000000262      17
Supplier#000000496      17
Supplier#000002160      17
Supplier#000002301      17
Supplier#000002540      17
Supplier#000003063      17
Supplier#000005178      17
Supplier#000008331      17
Supplier#000002005      16
Supplier#000002095      16
Supplier#000005799      16
Supplier#000005842      16

… additional rows deleted ….

Supplier#000000811      12
Supplier#000000821      12
Supplier#000001337      12
Supplier#000001916      12
Supplier#000001925      12
Supplier#000002039      12
Supplier#000002357      12
```


© 2006 Hewlett-Packard Company. All rights reserved.

```
Supplier#000002483       12

(100 row(s) affected)
```

Qualification Query 22

```
-- using default substitutions

/* TPC_H  Query 22 - Global Sales Opportunity */

SELECT   CNTRYCODE,
         COUNT(*)          AS NUMCUST,
         SUM(C_ACCTBAL)    AS TOTACCTBAL
FROM     (        SELECT   SUBSTRING(C_PHONE,1,2)    AS
CNTRYCODE,
                          C_ACCTBAL
                  FROM     CUSTOMER
                  WHERE    SUBSTRING(C_PHONE,1,2)    IN
         ('13', '31', '23', '29', '30', '18', '17') AND
                          C_ACCTBAL                  >
         (        SELECT   AVG(C_ACCTBAL)

                  FROM     CUSTOMER

                  WHERE    C_ACCTBAL        > 0.00    AND

                           SUBSTRING(C_PHONE,1,2)    IN
         ('13', '31', '23', '29', '30', '18', '17')

         )        AND
                           NOT EXISTS       (         SELECT
         *
                                                      FROM
         ORDERS
                                                      WHERE
         O_CUSTKEY         = C_CUSTKEY
                                            )
         )        AS CUSTSALE
GROUP    BY       CNTRYCODE
ORDER    BY       CNTRYCODE

CNTRYCODE NUMCUST    TOTACCTBAL
--------- ----------- ------------------------
13        888         6737713.990000
17        861         6460573.720000
18        964         7236687.400000
23        892         6701457.950000
29        948         7158866.630000
30        909         6808436.130000
31        922         6806670.180000

(7 row(s) affected)
```


© 2006 Hewlett-Packard Company. All rights reserved.

Appendix D: Seeds and Query Substitution Parameters

Stream0 Seed : 1101115512

1	117					
2	11	NICKEL	AMERICA			
3	MACHINERY		1995-03-13			
4	1995-01-01					
5	ASIA	1996-01-01				
6	1996-01-01		0.04	25		
7	GERMANY		PERU			
8	PERU	AMERICA		ECONOMY ANODIZED NICKEL		
9	peach					
10	1993-11-01					
11	IRAQ	0.0000010000				
12	TRUCK	AIR	1996-01-01			
13	special	accounts				
14	1996-04-01					
15	1995-12-01					
16	Brand#42	LARGE PLATED		17	4	40
	33	14	44	36	39	
17	Brand#23	MED DRUM				
18	314					
19	Brand#33	Brand#44	Brand#25	8	18	30
20	magenta	1996-01-01		MOZAMBIQUE		
21	ROMANIA					
22	23	16	31	27	10	12
	30					

Stream1 Seed : 1101115513

1	64					
2	49	TIN	MIDDLE EAST			
3	BUILDING		1995-03-29			
4	1997-08-01					
5	EUROPE	1996-01-01				
6	1996-01-01		0.09	24		
7	UNITED STATES		INDONESIA			
8	INDONESIA		ASIA	LARGE POLISHED NICKEL		
9	navy					
10	1994-09-01					
11	UNITED STATES		0.0000010000			
12	RAIL	AIR	1996-01-01			
13	special	accounts				
14	1996-07-01					
15	1993-08-01					
16	Brand#22	PROMO BRUSHED		33	47	25
	21	49	5	4	44	
17	Brand#25	JUMBO BAG				
18	315					
19	Brand#45	Brand#32	Brand#24	3	19	26
20	tomato	1995-01-01		FRANCE		
21	JAPAN					
22	16	15	17	10	26	24
	20					

Stream2 Seed : 1101115514

1	72					
2	37	STEEL	ASIA			
3	HOUSEHOLD		1995-03-15			
4	1995-04-01					
5	MIDDLE EAST		1996-01-01			
6	1996-01-01		0.07	24		
7	MOZAMBIQUE		ARGENTINA			
8	ARGENTINA		AMERICA	LARGE BURNISHED NICKEL		
9	metallic					
10	1993-06-01					
11	JAPAN	0.0000010000				
12	AIR	FOB	1996-01-01			
13	pending	deposits				
14	1996-11-01					
15	1996-03-01					
16	Brand#12	MEDIUM ANODIZED		14	19	
	9	42	7	29	39	48
17	Brand#22	JUMBO PACK				
18	313					
19	Brand#42	Brand#15	Brand#13	8	20	23
20	goldenrod	1993-01-01		SAUDI ARABIA		
21	EGYPT					
22	23	13	24	29	16	22
	26					

Stream3 Seed : 1101115515

1	80					
2	25	BRASS	MIDDLE EAST			
3	BUILDING		1995-03-31			
4	1997-11-01					
5	AMERICA		1997-01-01			
6	1997-01-01		0.04	25		
7	INDIA	CHINA				
8	CHINA	ASIA	MEDIUM BRUSHED BRASS			
9	light					
10	1994-03-01					
11	ALGERIA	0.0000010000				
12	REG AIR	RAIL	1997-01-01			
13	pending	deposits				
14	1997-02-01					
15	1993-12-01					
16	Brand#42	ECONOMY PLATED		13	31	
	10	3	19	21	17	20
17	Brand#24	JUMBO DRUM				
18	314					
19	Brand#44	Brand#53	Brand#13	4	10	30
20	rose	1997-01-01		IRAN		
21	VIETNAM					
22	19	18	10	26	11	31
	14					

© 2006 Hewlett-Packard Company. All rights reserved.

Stream4 Seed : 1101115516

1	88					
2	13	NICKEL	ASIA			
3	HOUSEHOLD	1995-03-17				
4	1995-08-01					
5	ASIA	1997-01-01				
6	1997-01-01	0.02	24			
7	ALGERIA	IRAN				
8	IRAN	MIDDLE EAST	MEDIUM PLATED BRASS			
9	ivory					
10	1994-12-01					
11	JORDAN	0.0000010000				
12	SHIP	RAIL	1997-01-01			
13	pending	deposits				
14	1997-05-01					
15	1996-07-01					
16	Brand#22	STANDARD POLISHED		4	10	
	28	36	2	14	31	40
17	Brand#21	WRAP BAG				
18	312					
19	Brand#51	Brand#31	Brand#52	9	11	26
20	cornflower	1995-01-01	ALGERIA			
21	JORDAN					
22	10	34	13	26	12	17
	20					

Stream5 Seed : 1101115517

1	96					
2	50	TIN	AFRICA			
3	AUTOMOBILE	1995-03-02				
4	1993-05-01					
5	EUROPE	1997-01-01				
6	1997-01-01	0.07	24			
7	PERU	BRAZIL				
8	BRAZIL	AMERICA	MEDIUM ANODIZED BRASS			
9	goldenrod					
10	1993-09-01					
11	ARGENTINA	0.0000010000				
12	MAIL	RAIL	1997-01-01			
13	pending	deposits				
14	1997-08-01					
15	1994-03-01					
16	Brand#12	LARGE ANODIZED		47	31	39
	25	50	6	20	3	
17	Brand#23	WRAP PACK				
18	314					
19	Brand#54	Brand#24	Brand#51	4	12	22
20	navajo	1994-01-01	MOROCCO			
21	ETHIOPIA					
22	25	33	12	26	34	24
	22					

© 2006 Hewlett-Packard Company. All rights reserved.

Appendix E: Refresh Function Source Code

E.1 CreateRF1Proc.sql

```
--  File:    CREATERF1PROC.SQL
--          Microsoft TPC-H Benchmark Kit Ver. 1.00
--          Copyright Microsoft, 1999
--

IF exists (SELECT name FROM sysobjects WHERE name = 'RF1')
            DROP PROCEDURE RF1
GO

--
--  Create a stored RefreshInsert procedure which will catch the deadlock
--  victim abort and restart the insert transaction.
--
CREATE PROCEDURE RF1
     @current_execution INTEGER, @insert_sets INTEGER,
@parallel_executions INTEGER, @total_executions INTEGER
AS
BEGIN

DECLARE @startdate DATETIME
DECLARE @enddate DATETIME
DECLARE @edate DATETIME
DECLARE @rangeStart INTEGER
DECLARE @rangeSize INTEGER
DECLARE @range INTEGER

DECLARE @success INTEGER
DECLARE @index INTEGER
DECLARE @div INTEGER
DECLARE @mod INTEGER
DECLARE @skip INTEGER
DECLARE @i INTEGER
DECLARE @rangeSum INTEGER
DECLARE @totRangeSize INTEGER
DECLARE @stmt NCHAR(1000)
DECLARE @orderSql NCHAR(1000)
DECLARE @liSql NCHAR(1000)

SET @skip = @total_executions/@parallel_executions
SET @div = (@current_execution - 1)/@parallel_executions
SET @mod = (@current_execution - 1) - @div * @parallel_executions
SET @index = @mod*@skip + @div + 1


--
-- Get the range for this execution
--
SET @stmt = N'SELECT @sdate = dateadd(day,-1,min(O_ORDERDATE)),
@edate = max(O_ORDERDATE)
                        FROM NEWORDERS'
EXEC sp_executesql @stmt,N'@sdate datetime output, @edate datetime
output',@startdate output, @enddate output

IF (@total_executions > @parallel_executions)
            BEGIN
            SET @div = (@index-1)/@skip
            SET @mod = (@index-1) - @div * @skip
            SET @rangeSize = datediff(day, @startdate,
@enddate)/@parallel_executions + 1
            SET @totRangeSize = @rangeSize
            SET @rangeSum = 0
            SET @rangeStart = @div * @rangeSize
            SET @i = @mod
            while (@i > 0)
                        BEGIN
                        SET @rangeSize = (@totRangeSize - @rangeSum)/2
                        SET @rangeSum = @rangeSum + @rangeSize
                        SET @rangeStart = @rangeStart + @rangeSize
                        SET @insert_sets = @insert_sets/2
                        SET @i = @i - 1
                        end

            IF (@mod + 1 = @skip) --  last allocation
                        SET @rangeSize = @totRangeSize - @rangeSum
            ELSE
                        SET @rangeSize = (@totRangeSize - @rangeSum)/2
            IF (@rangeSize < 0)
                        SET @rangeSize = 0
            IF (@insert_sets <= 0)
                        SET @insert_sets = 1
            end
ELSE
            BEGIN
            SET @rangeSize = datediff(day, @startdate,
@enddate)/@total_executions
            SET @rangeStart = @rangeSize * (@index - 1)
            end

SET @startdate = dateadd(day, @rangeStart, @startdate)
IF (@index < @total_executions)
            SET @enddate = dateadd(day, @rangeSize, @startdate)

SET @range = datediff(day, @startdate, @enddate) / @insert_sets

--
--  This handles the case when the max-min/insert_sets is less that 1
--
IF @range = 0
            SET @range = 1


--
-- Generate the two insert statements
--
SET @edate = dateadd(day, @range, @startdate)
SET @orderSql = N'INSERT INTO ORDERS (O_ORDERKEY,
O_CUSTKEY, O_ORDERSTATUS, O_TOTALPRICE,
                                                O_ORDERDATE,
O_ORDERPRIORITY, O_CLERK, O_SHIPPRIORITY, O_COMMENT)
                                    (SELECT O_ORDERKEY, O_CUSTKEY,
O_ORDERSTATUS, O_TOTALPRICE,
                                                O_ORDERDATE,
O_ORDERPRIORITY, O_CLERK, O_SHIPPRIORITY, O_COMMENT
                                     FROM NEWORDERS
                                     WHERE O_ORDERDATE > @startdate
AND O_ORDERDATE <= @edate)
                                    option (loop join)'
SET @liSql = N'INSERT INTO LINEITEM
(L_ORDERKEY,L_PARTKEY,L_SUPPKEY,L_LINENUMBER,L_QUAN
TITY,
                                                L_EXTENDEDPRICE,
L_DISCOUNT, L_TAX, L_RETURNFLAG, L_LINESTATUS,
                                                L_SHIPDATE,
L_COMMITDATE, L_RECEIPTDATE, L_SHIPINSTRUCT,
L_SHIPMODE, L_COMMENT)
                                    (SELECT
L_ORDERKEY,L_PARTKEY,L_SUPPKEY,L_LINENUMBER,L_QUAN
TITY,
```


© 2006 Hewlett-Packard Company. All rights reserved.

```
                                        L_EXTENDEDPRICE,
L_DISCOUNT, L_TAX, L_RETURNFLAG, L_LINESTATUS,
                                        L_SHIPDATE,
L_COMMITDATE, L_RECEIPTDATE, L_SHIPINSTRUCT,
L_SHIPMODE, L_COMMENT
                                FROM NEWLINEITEM, NEWORDERS
                                WHERE L_ORDERKEY =
O_ORDERKEY AND O_ORDERDATE > @startdate AND
                                                O_ORDERDATE
<= @edate)
                                option (loop join)'

--
--  Loop through the order keys inserting sets into the
--  ORDERS and LINTEITEM tables
--
WHILE @startdate < @enddate
        BEGIN
        --
        --  Insert into ORDERS and LINEITEM tables
        --
        INSERT_TRANS:
        SET @success = 1
        BEGIN TRANSACTION

        BEGIN TRY
                EXEC sp_executesql @orderSql, N'@startdate
datetime, @edate datetime', @startdate, @edate
                EXEC sp_executesql @liSql, N'@startdate datetime,
@edate datetime', @startdate, @edate
        END TRY
        BEGIN CATCH
                SET @success = 0
                IF (error_number() = 1205)      -- deadlock victim
                        PRINT 'Insert deadlock - restarting RF1'
                ELSE
                        BEGIN                           -- not a
deadlock
                        PRINT 'Error - Not a deadlock'
                        PRINT ERROR_NUMBER()
                        PRINT ERROR_SEVERITY()
                PRINT ERROR_MESSAGE()
                PRINT ERROR_STATE()
                PRINT XACT_STATE()
                        END
                IF (@@trancount>0)
                        ROLLBACK TRANSACTION
        END CATCH

        IF (@success = 0)                       -- deadlock - redo
the inserts
                GOTO INSERT_TRANS

        COMMIT TRANSACTION

        SET @startdate = @edate
        SET @edate = dateadd(day, @range, @edate)

        IF (@edate > @enddate)
                SET @edate = @enddate

        END
END

GO
```

E.2 CreateRF2Proc.sql

```
--  File:    CREATERF2PROC.SQL
--          Microsoft TPC-H Benchmark Kit Ver. 1.00
--          Copyright Microsoft, 1999
--

IF exists (SELECT name FROM sysobjects WHERE name = 'RF2')
            DROP PROCEDURE RF2
GO

--
--  Create a stored Refresh Delete procedure which will catch the deadlock
--  victim abort and restart the delete transaction.
--
CREATE PROCEDURE RF2
      @current_execution INTEGER, @delete_sets INTEGER,
@parallel_executions INTEGER, @total_executions INTEGER
AS
BEGIN

DECLARE @startdate DATETIME
DECLARE @enddate DATETIME
DECLARE @edate DATETIME
DECLARE @rangeStart INTEGER
DECLARE @rangeSize INTEGER
DECLARE @range INTEGER

declare @success INTEGER
declare @index INTEGER
declare @div INTEGER
declare @mod INTEGER
declare @skip INTEGER
declare @i INTEGER
declare @rangeSum INTEGER
declare @totRangeSize INTEGER
declare @sql NCHAR(1000)
declare @orderSql NCHAR(1000)
declare @liSql NCHAR(1000)

SET @skip = @total_executions/@parallel_executions
SET @div = floor((@current_execution-1)/@parallel_executions)
SET @mod = (@current_execution - 1) - @div * @parallel_executions
SET @index = @mod*@skip + @div + 1

SET @sql = N'SELECT @sdate = dateadd(day,-1,min(O_ORDERDATE)),
@edate = max(O_ORDERDATE)
                FROM MOD_OLDORDERS'
EXEC sp_executesql @sql,N'@sdate datetime output, @edate datetime
output',@startdate output, @enddate output

IF (@total_executions > @parallel_executions)
            BEGIN
            SET @div = (@index-1)/@skip
            SET @mod = (@index-1) - @div * @skip
            SET @rangeSize = datediff(day, @startdate,
@enddate)/@parallel_executions + 1
            SET @totRangeSize = @rangeSize
            SET @rangeSum = 0
            SET @rangeStart = @div * @rangeSize
            SET @i = @mod
            WHILE (@i > 0)
                        BEGIN
                        SET @rangeSize = (@totRangeSize - @rangeSum)/2
                        SET @rangeSum = @rangeSum + @rangeSize
                        SET @rangeStart = @rangeStart + @rangeSize
                        SET @delete_sets = @delete_sets/2
                        SET @i = @i - 1
                        END
```


© 2006 Hewlett-Packard Company. All rights reserved.

```
		IF (@mod + 1 = @skip) --  last allocation
			SET @rangeSize = @totRangeSize - @rangeSum
		ELSE
			SET @rangeSize = (@totRangeSize - @rangeSum)/2
		IF (@rangeSize < 0)
			SET @rangeSize = 0
		IF (@delete_sets <= 0)
			SET @delete_sets = 1
		END
ELSE
		BEGIN
		SET @rangeSize = datediff(day, @startdate,
@enddate)/@total_executions
		SET @rangeStart = @rangeSize * (@index - 1)
		END

SET @startdate = dateadd(day, @rangeStart, @startdate)
IF (@index < @total_executions)
		SET @enddate = dateadd(day, @rangeSize, @startdate)

SET @range = datediff(day, @startdate, @enddate) / @delete_sets

--
--  This handles the case when the max-min/delete_sets is less that 1
--
IF @range = 0
		SET @range = 1

--
--  Loop through the order keys deleting sets from orders
--  and lineitem tables
--
SET @edate = dateadd(day, @range, @startdate)
SET @liSql = N'DELETE FROM LINEITEM WHERE L_ORDERKEY in
			(SELECT O_ORDERKEY FROM
MOD_OLDORDERS
				 WHERE O_ORDERDATE > @startdate
AND O_ORDERDATE <= @edate)
				option (loop join)'
SET @orderSql = N'DELETE FROM ORDERS WHERE O_ORDERKEY
in
			(SELECT O_ORDERKEY FROM
MOD_OLDORDERS
				 WHERE O_ORDERDATE > @startdate
AND O_ORDERDATE <= @edate)
				option (loop join)'


}
```

```
WHILE @startdate < @enddate
		BEGIN

		DELETE_TRANS:
		SET @success = 1
		BEGIN TRANSACTION

		BEGIN TRY
			EXEC sp_executesql @liSql, N'@startdate datetime,
@edate datetime', @startdate, @edate
			EXEC sp_executesql @orderSql, N'@startdate
datetime, @edate datetime', @startdate, @edate
		END TRY
		BEGIN CATCH
			SET @success = 0
			IF (error_number() = 1205)	-- deadlock victim
				PRINT 'Insert deadlock - restarting RF2'
			ELSE
				BEGIN				-- not a
deadlock
				PRINT 'Error - Not a deadlock'
				PRINT ERROR_NUMBER()
				PRINT ERROR_SEVERITY()
			PRINT ERROR_MESSAGE()
			PRINT ERROR_STATE()
			PRINT XACT_STATE()
				END
			IF (@@trancount>0)
				ROLLBACK TRANSACTION
		END CATCH

		IF (@success = 0)				-- deadlock - redo
the inserts
			GOTO DELETE_TRANS

		COMMIT TRANSACTION

		SET @startdate = @edate
		SET @edate = dateadd(day, @range, @edate)

		IF (@edate > @enddate)
			SET @edate = @enddate


		END
END

GO
```


© 2006 Hewlett-Packard Company. All rights reserved.

Appendix F: Implementation Specific Layer and Source Code

F.1 Print.C for DBGEN

```
/*
* $Id: print.c,v 1.2 2005/01/03 20:08:59 jms
Exp $
*
* Revision History
* ==================
* $Log: print.c,v $
* Revision 1.2  2005/01/03 20:08:59  jms
* change line terminations
*
* Revision 1.1.1.1  2004/11/24 23:31:47  jms
* re-establish external server
*
* Revision 1.4  2004/02/18 16:26:49  jms
* 32/64 bit changes for overflow handling
needed additional changes when ported back to
windows
*
* Revision 1.3  2004/02/18 14:05:53  jms
* porting changes for LINUX and 64 bit RNG
*
* Revision 1.2  2004/01/22 05:49:29  jms
* AIX porting (AIX 5.1)
*
* Revision 1.1.1.1  2003/08/07 17:58:34  jms
* recreation after CVS crash
*
* Revision 1.2  2003/08/07 17:58:34  jms
* Convery RNG to 64bit space as preparation
for new large scale RNG
*
* Revision 1.1.1.1  2003/04/03 18:54:21  jms
* initial checkin
*
*
*/
/* generate flat files for data load */
#include <stdio.h>
#ifndef VMS
#include <sys/types.h>
#endif
#if defined(SUN)
#include <unistd.h>
#endif
#include <math.h>

#include "dss.h"
#include "dsstypes.h"
#include <string.h>

/*
 * Function Prototypes
 */
FILE *print_prep PROTO((int table, int
update));
int pr_drange PROTO((int tbl, DSS_HUGE
min, DSS_HUGE cnt, long num));

FILE *
print_prep(int table, int update)
{
        char upath[128];
        FILE *res;

        if (updates)
                {
                if (update > 0) /* updates */
                        if ( insert_segments
)
                                {
                                int
this_segment;

        if(strcmp(tdefs[table].name,"orders.tbl
"))

        this_segment=++insert_orders_segme
nt;
                                else

        this_segment=++insert_lineitem_segm
ent;

        sprintf(upath, "%s%c%s.u%d.%d",

        env_config(PATH_TAG,
PATH_DFLT),

        PATH_SEP, tdefs[table].name,
update%10000,this_segment);
                                }
                        else
                                {

        sprintf(upath, "%s%c%s.u%d",
```


© 2006 Hewlett-Packard Company. All rights reserved.

```
		env_config(PATH_TAG,
PATH_DFLT),

		PATH_SEP, tdefs[table].name,
update);
						}
				else /* deletes */
					if ( delete_segments
)
						{

		++delete_segment;

		sprintf(upath, "%s%cdelete.u%d.%d",

		env_config(PATH_TAG,
PATH_DFLT), PATH_SEP, -update%10000,

		delete_segment);
						}
					else
						{

		sprintf(upath, "%s%cdelete.%d",

		env_config(PATH_TAG,
PATH_DFLT), PATH_SEP, -update);
						}
				return(fopen(upath, "w"));
	}
	res = tbl_open(table, "w");
	OPEN_CHECK(res, tdefs[table].name);
	return(res);
}

int
dbg_print(int format, FILE *target, void *data,
int len, int sep)
{
		int dollars,
			cents;

		switch(format)
		{
		case DT_STR:
			if (columnar)
				fprintf(target, "%-
*s", len, (char *)data);
			else
				fprintf(target, "%s",
(char *)data);
			break;
#ifdef MVS
		case DT_VSTR:
			/* note: only used in MVS,
assumes columnar output */
			fprintf(target, "%c%c%-*s",
				(len >> 8) & 0xFF,
len & 0xFF, len, (char *)data);
			break;
#endif /* MVS */
		case DT_INT:
			if (columnar)
				fprintf(target,
"%12ld", (long)data);
			else
				fprintf(target, "%ld",
(long)data);
			break;
		case DT_HUGE:
			fprintf(target,
HUGE_FORMAT, *(DSS_HUGE *)data);
			break;
		case DT_KEY:
			fprintf(target, "%ld",
(long)data);
			break;
		case DT_MONEY:
			cents = (int)*(DSS_HUGE
*)data;
			if (cents < 0)
				{
				fprintf(target, "-");
				cents = -cents;
				}
			dollars = cents / 100;
			cents %= 100;
			if (columnar)
				fprintf(target,
"%12ld.%02ld", dollars, cents);
			else
				fprintf(target,
"%ld.%02ld", dollars, cents);
			break;
		case DT_CHR:
			if (columnar)
				fprintf(target, "%c ",
*(char *)data);
			else
				fprintf(target, "%c",
*(char *)data);
			break;
		}

#ifdef EOL_HANDLING
		if (sep)
#endif /* EOL_HANDLING */
		if (!columnar)
			fprintf(target, "%c",
SEPARATOR);
```


© 2006 Hewlett-Packard Company. All rights reserved.

```
            return(0);
}

int
pr_cust(customer_t *c, int mode)
{
static FILE *fp = NULL;

  if (fp == NULL)
      fp = print_prep(CUST, 0);

  PR_STRT(fp);
  PR_HUGE(fp, &c->custkey);
  PR_STR(fp, c->mktsegment,
C_MSEG_LEN);
  PR_HUGE(fp, &c->nation_code);
  PR_VSTR(fp, c->name, C_NAME_LEN);
  PR_VSTR(fp, c->address,
     (columnar)?(long)(ceil(C_ADDR_LEN *
V_STR_HGH)):c->alen);
  PR_STR(fp, c->phone, PHONE_LEN);
  PR_MONEY(fp, &c->acctbal);
  PR_VSTR_LAST(fp, c->comment,
     (columnar)?(long)(ceil(C_CMNT_LEN *
V_STR_HGH)):c->clen);
  PR_END(fp);

  return(0);
}

/*
 * print the numbered order
 */
int
pr_order(order_t *o, int mode)
{
   static FILE *fp_o = NULL;
   static int last_mode = 0;

   if (fp_o == NULL || mode != last_mode)
      {
      if (fp_o)
         fclose(fp_o);
      fp_o = print_prep(ORDER, mode);
      last_mode = mode;
      }
   PR_STRT(fp_o);
   PR_STR(fp_o, o->odate, DATE_LEN);
   PR_HUGE(fp_o, &o->okey);
   PR_HUGE(fp_o, &o->custkey);
   PR_STR(fp_o, o->opriority,
O_OPRIO_LEN);
   PR_INT(fp_o, o->spriority);
   PR_STR(fp_o, o->clerk, O_CLRK_LEN);
   PR_CHR(fp_o, &o->orderstatus);
   PR_MONEY(fp_o, &o->totalprice);
   PR_VSTR_LAST(fp_o, o->comment,
     (columnar)?(long)(ceil(O_CMNT_LEN *
V_STR_HGH)):o->clen);
   PR_END(fp_o);

   return(0);
}

/*
 * print an order's lineitems
 */
int
pr_line(order_t *o, int mode)
{
   static FILE *fp_l = NULL;
   static int last_mode = 0;
   long      i;

   if (fp_l == NULL || mode != last_mode)
      {
      if (fp_l)
         fclose(fp_l);
      fp_l = print_prep(LINE, mode);
      last_mode = mode;
      }

   for (i = 0; i < o->lines; i++)
      {
      PR_STRT(fp_l);
      PR_STR(fp_l, o->l[i].sdate, DATE_LEN);
      PR_HUGE(fp_l, &o->l[i].okey);
      PR_MONEY(fp_l, &o->l[i].discount);
      PR_MONEY(fp_l, &o->l[i].eprice);
      PR_HUGE(fp_l, &o->l[i].suppkey);
      PR_HUGE(fp_l, &o->l[i].quantity);
      PR_CHR(fp_l, &o->l[i].rflag[0]);
      PR_HUGE(fp_l, &o->l[i].partkey);
      PR_CHR(fp_l, &o->l[i].lstatus[0]);
      PR_MONEY(fp_l, &o->l[i].tax);
      PR_STR(fp_l, o->l[i].cdate, DATE_LEN);
      PR_STR(fp_l, o->l[i].rdate, DATE_LEN);
      PR_STR(fp_l, o->l[i].shipmode,
L_SMODE_LEN);
      PR_HUGE(fp_l, &o->l[i].lcnt);
      PR_STR(fp_l, o->l[i].shipinstruct,
L_INST_LEN);
      PR_VSTR_LAST(fp_l, o->l[i].comment,
         (columnar)?(long)(ceil(L_CMNT_LEN
* V_STR_HGH)):o->l[i].clen);
      PR_END(fp_l);
      }

  return(0);
}
```


© 2006 Hewlett-Packard Company. All rights reserved.

```
/*
 * print the numbered order *and* its
associated lineitems
 */
int
pr_order_line(order_t *o, int mode)
{
    tdefs[ORDER].name =
tdefs[ORDER_LINE].name;
    pr_order(o, mode);
    pr_line(o, mode);

    return(0);
}

/*
 * print the given part
 */
int
pr_part(part_t *part, int mode)
{
static FILE *p_fp = NULL;

    if (p_fp == NULL)
        p_fp = print_prep(PART, 0);

   PR_STRT(p_fp);
   PR_HUGE(p_fp, &part->partkey);
   PR_VSTR(p_fp, part->type,
      (columnar)?(long)P_TYPE_LEN:part-
>tlen);
   PR_HUGE(p_fp, &part->size);
   PR_STR(p_fp, part->brand, P_BRND_LEN);
   PR_VSTR(p_fp, part->name,
      (columnar)?(long)P_NAME_LEN:part-
>nlen);
   PR_STR(p_fp, part->container,
P_CNTR_LEN);
   PR_STR(p_fp, part->mfgr, P_MFG_LEN);
   PR_MONEY(p_fp, &part->retailprice);
   PR_VSTR_LAST(p_fp, part->comment,
      (columnar)?(long)(ceil(P_CMNT_LEN *
V_STR_HGH)):part->clen);
   PR_END(p_fp);

   return(0);
}

/*
 * print the given part's suppliers
 */
int
pr_psupp(part_t *part, int mode)
{
    static FILE *ps_fp = NULL;
    long      i;

    if (ps_fp == NULL)
        ps_fp = print_prep(PSUPP, mode);

   for (i = 0; i < SUPP_PER_PART; i++)
      {
      PR_STRT(ps_fp);
      PR_HUGE(ps_fp, &part->s[i].partkey);
      PR_HUGE(ps_fp, &part->s[i].suppkey);
      PR_MONEY(ps_fp, &part->s[i].scost);
      PR_HUGE(ps_fp, &part->s[i].qty);
      PR_VSTR_LAST(ps_fp, part-
>s[i].comment,
       (columnar)?(long)(ceil(PS_CMNT_LEN *
V_STR_HGH)):part->s[i].clen);
      PR_END(ps_fp);
      }
   return(0);
}

/*
 * print the given part *and* its suppliers
 */
int
pr_part_psupp(part_t *part, int mode)
{
    tdefs[PART].name =
tdefs[PART_PSUPP].name;
    pr_part(part, mode);
    pr_psupp(part, mode);

    return(0);
}

int
pr_supp(supplier_t *supp, int mode)
{
static FILE *fp = NULL;

   if (fp == NULL)
       fp = print_prep(SUPP, mode);

   PR_STRT(fp);
   PR_HUGE(fp, &supp->suppkey);
   PR_HUGE(fp, &supp->nation_code);
   PR_STR(fp, supp->name, S_NAME_LEN);
   PR_VSTR(fp, supp->address,
      (columnar)?(long)(ceil(S_ADDR_LEN *
V_STR_HGH)):supp->alen);
   PR_STR(fp, supp->phone, PHONE_LEN);
   PR_MONEY(fp, &supp->acctbal);
   PR_VSTR_LAST(fp, supp->comment,
```


© 2006 Hewlett-Packard Company. All rights reserved.

```
      (columnar)?(long)(ceil(S_CMNT_LEN *
V_STR_HGH)):supp->clen);
   PR_END(fp);

   return(0);
}

int
pr_nation(code_t *c, int mode)
{
static FILE *fp = NULL;

   if (fp == NULL)
        fp = print_prep(NATION, mode);

   PR_STRT(fp);
   PR_HUGE(fp, &c->code);
   PR_STR(fp, c->text, NATION_LEN);
   PR_INT(fp, c->join);
   PR_VSTR_LAST(fp, c->comment,
      (columnar)?(long)(ceil(N_CMNT_LEN *
V_STR_HGH)):c->clen);
   PR_END(fp);

   return(0);
}

int
pr_region(code_t *c, int mode)
{
static FILE *fp = NULL;

   if (fp == NULL)
        fp = print_prep(REGION, mode);

   PR_STRT(fp);
   PR_HUGE(fp, &c->code);
   PR_STR(fp, c->text, REGION_LEN);
   PR_VSTR_LAST(fp, c->comment,
      (columnar)?(long)(ceil(R_CMNT_LEN *
V_STR_HGH)):c->clen);
   PR_END(fp);

   return(0);
}

/*
 * NOTE: this routine does NOT use the
BCD2_* routines. As a result,
 * it WILL fail if the keys being deleted exceed
32 bits. Since this
 * would require ~660 update iterations, this
seems an acceptable
 * oversight
 */
int
pr_drange(int tbl, DSS_HUGE min,
DSS_HUGE cnt, long num)
{
   static int  last_num = 0;
   static FILE *dfp = NULL;
   DSS_HUGE child = -1;
   DSS_HUGE start, last, new;

            static DSS_HUGE
rows_per_segment=0;
            static DSS_HUGE
rows_this_segment=0;

   if (last_num != num)
      {
      if (dfp)
         fclose(dfp);
      dfp = print_prep(tbl, -num);
      if (dfp == NULL)
         return(-1);
      last_num = num;
                  rows_this_segment=0;
      }

   start = MK_SPARSE(min, num/ (10000 /
refresh));
   last = start - 1;
   for (child=min; cnt > 0; child++, cnt--)
      {
      new = MK_SPARSE(child, num/ (10000 /
refresh));
      if (gen_rng == 1 && new - last == 1)
         {
         last = new;
         continue;
         }
          if (gen_sql)
             {
             fprintf(dfp,
                  "delete from %s where %s
between %ld and %ld;\n",
                  tdefs[ORDER].name,
"o_orderkey", start, last);
             fprintf(dfp,
                  "delete from %s where %s
between %ld and %ld;\n",
                  tdefs[LINE].name,
"l_orderkey", start, last);
             fprintf(dfp, "commit work;\n");
             }
          else
             if (gen_rng)
             {
             PR_STRT(dfp);
             PR_HUGE(dfp, &start);
```


© 2006 Hewlett-Packard Company. All rights reserved.

```
            PR_HUGE(dfp, &last);
            PR_END(dfp);
            }
          else
            {
                                        if
(delete_segments)
                                        {


            if(rows_per_segment==0)

            rows_per_segment = (cnt /
delete_segments) + 1;

            if((++rows_this_segment) >
rows_per_segment)

            {

            fclose(dfp);

            dfp = print_prep(tbl, -num);

            if (dfp == NULL) return(-1);

            last_num = num;

            rows_this_segment=1;

            }
                                        }
            PR_STRT(dfp);
            PR_HUGE(dfp, &new);
            PR_END(dfp);
            }
            start = new;
                last = new;
            }
        if (gen_rng)
                {
                PR_STRT(dfp);
                PR_HUGE(dfp, &start);
                PR_HUGE(dfp, &last);
                PR_END(dfp);
                }

        return(0);
    }

    /*
     * verify functions: routines which replace the
    pr_routines and generate a pseudo checksum
     * instead of generating the actual contents of
    the tables. Meant to allow large scale data
     * validation without requiring a large amount
    of storage
     */
    int
    vrf_cust(customer_t *c, int mode)
    {
      VRF_STRT(CUST);
      VRF_INT(CUST, c->custkey);
      VRF_STR(CUST, c->name);
      VRF_STR(CUST, c->address);
      VRF_INT(CUST, c->nation_code);
      VRF_STR(CUST, c->phone);
      VRF_MONEY(CUST, c->acctbal);
      VRF_STR(CUST, c->mktsegment);
      VRF_STR(CUST, c->comment);
      VRF_END(CUST);

      return(0);
    }

    /*
     * print the numbered order
     */
    int
    vrf_order(order_t *o, int mode)
    {
        VRF_STRT(ORDER);
        VRF_HUGE(ORDER, o->okey);
        VRF_INT(ORDER, o->custkey);
        VRF_CHR(ORDER, o->orderstatus);
        VRF_MONEY(ORDER, o->totalprice);
        VRF_STR(ORDER, o->odate);
        VRF_STR(ORDER, o->opriority);
        VRF_STR(ORDER, o->clerk);
        VRF_INT(ORDER, o->spriority);
        VRF_STR(ORDER, o->comment);
        VRF_END(ORDER);

        return(0);
    }

    /*
     * print an order's lineitems
     */
    int
    vrf_line(order_t *o, int mode)
    {
            int i;

        for (i = 0; i < o->lines; i++)
            {
            VRF_STRT(LINE);
            VRF_HUGE(LINE, o->l[i].okey);
            VRF_INT(LINE, o->l[i].partkey);
            VRF_INT(LINE, o->l[i].suppkey);
            VRF_INT(LINE, o->l[i].lcnt);
```


© 2006 Hewlett-Packard Company. All rights reserved.

```
      VRF_INT(LINE, o->l[i].quantity);
      VRF_MONEY(LINE, o->l[i].eprice);
      VRF_MONEY(LINE, o->l[i].discount);
      VRF_MONEY(LINE, o->l[i].tax);
      VRF_CHR(LINE, o->l[i].rflag[0]);
      VRF_CHR(LINE, o->l[i].lstatus[0]);
      VRF_STR(LINE, o->l[i].sdate);
      VRF_STR(LINE, o->l[i].cdate);
      VRF_STR(LINE, o->l[i].rdate);
      VRF_STR(LINE, o->l[i].shipinstruct);
      VRF_STR(LINE, o->l[i].shipmode);
      VRF_STR(LINE, o->l[i].comment);
      VRF_END(LINE);
      }

  return(0);
}

/*
 * print the numbered order *and* its
associated lineitems
 */
int
vrf_order_line(order_t *o, int mode)
{
   vrf_order(o, mode);
   vrf_line(o, mode);

   return(0);
}

/*
 * print the given part
 */
int
vrf_part(part_t *part, int mode)
{
  VRF_STRT(PART);
  VRF_INT(PART, part->partkey);
  VRF_STR(PART, part->name);
  VRF_STR(PART, part->mfgr);
  VRF_STR(PART, part->brand);
  VRF_STR(PART, part->type);
  VRF_INT(PART, part->size);
  VRF_STR(PART, part->container);
  VRF_MONEY(PART, part->retailprice);
  VRF_STR(PART, part->comment);
  VRF_END(PART);

  return(0);
}

/*
 * print the given part's suppliers
 */
int
vrf_psupp(part_t *part, int mode)
{
   long     i;

  for (i = 0; i < SUPP_PER_PART; i++)
    {
    VRF_STRT(PSUPP);
    VRF_INT(PSUPP, part->s[i].partkey);
    VRF_INT(PSUPP, part->s[i].suppkey);
    VRF_INT(PSUPP, part->s[i].qty);
    VRF_MONEY(PSUPP, part->s[i].scost);
    VRF_STR(PSUPP, part->s[i].comment);
    VRF_END(PSUPP);
    }

  return(0);
}

/*
 * print the given part *and* its suppliers
 */
int
vrf_part_psupp(part_t *part, int mode)
{
   vrf_part(part, mode);
   vrf_psupp(part, mode);

   return(0);
}

int
vrf_supp(supplier_t *supp, int mode)
{
  VRF_STRT(SUPP);
  VRF_INT(SUPP, supp->suppkey);
  VRF_STR(SUPP, supp->name);
  VRF_STR(SUPP, supp->address);
  VRF_INT(SUPP, supp->nation_code);
  VRF_STR(SUPP, supp->phone);
  VRF_MONEY(SUPP, supp->acctbal);
  VRF_STR(SUPP, supp->comment);
  VRF_END(SUPP);

  return(0);
}

int
vrf_nation(code_t *c, int mode)
{
  VRF_STRT(NATION);
  VRF_INT(NATION, c->code);
  VRF_STR(NATION, c->text);
  VRF_INT(NATION, c->join);
  VRF_STR(NATION, c->comment);
```


© 2006 Hewlett-Packard Company. All rights reserved.

```
  VRF_END(NATION);

  return(0);
}

int
vrf_region(code_t *c, int mode)
{
  VRF_STRT(REGION);
  VRF_INT(REGION, c->code);
  VRF_STR(REGION, c->text);
  VRF_STR(REGION, c->comment);
  VRF_END(fp);

  return(0);
}
```

cArrConstraints.cls

```
VERSION 1.0 CLASS
BEGIN
  MultiUse = -1  'True
END
Attribute VB_Name = "cArrConstraints"
Attribute VB_GlobalNameSpace = False
Attribute VB_Creatable = True
Attribute VB_PredeclaredId = False
Attribute VB_Exposed = False
'  FILE:       cArrConstraints.cls
'              Microsoft TPC-H Kit Ver. 1.00
'              Copyright Microsoft, 1999
'              All Rights Reserved
'
'
'  PURPOSE:    Implements an array of cConstraint
objects.
'              Type-safe wrapper around
cNodeCollections.
'              Also contains additional functions
that determine all the
'              constraints for a step, all
constraints in a workspace,
'              validation functions, etc.
'  Contact:    Reshma Tharamal
(reshmat@microsoft.com)
'
Option Explicit

Private mcarrConstraints As cNodeCollections

' Used to indicate the source module name when errors
' are raised by this class
Private mstrSource As String
Private Const mstrModuleName As String =
"cArrConstraints."
Public Sub SaveWspConstraints(ByVal lngWorkspace As
Long)
    ' Calls a procedure to commit all changes to the
constraints
    ' in the passed in workspace.

    Call mcarrConstraints.Save(lngWorkspace)

End Sub
Public Property Set ConstraintDB(vdata As Database)

    Set mcarrConstraints.NodeDB = vdata

End Property
Public Property Get ConstraintDB() As Database

    Set ConstraintDB = mcarrConstraints.NodeDB

End Property

Public Sub Modify(cConsToUpdate As cConstraint)

    ' Modify the constraint record
    Call mcarrConstraints.Modify(cConsToUpdate)

End Sub
Public Sub CreateNewConstraintVersion(ByVal lngStepId
As Long, _
        ByVal strNewVersion As String, _
        ByVal strOldVersion As String, _
        ByVal intStepType As Integer)

    ' Does all the processing needed to create new
versions of
    ' all the constraints for a given step
    ' It inserts new constraint records in the
database with
    ' the new version numbers on them
    ' It also updates the version number on all
constraints
    ' for the step in the array to the new version
passed in
    ' Since it handles both global and manager/worker
steps,
    ' it checks for the step_id or global_step_id
fields,
    ' depending on the type of step

    Dim lngIndex As Long
    Dim cUpdateConstraint As cConstraint

    On Error GoTo CreateNewConstraintVersionErr
    mstrSource = mstrModuleName &
"CreateNewConstraintVersion"

    ' Update the version/global version on Constraint
with the
    ' passed in step/global step id
    For lngIndex = 0 To mcarrConstraints.Count - 1
        Set cUpdateConstraint =
mcarrConstraints(lngIndex)
        If intStepType = gintGlobalStep Then
            If cUpdateConstraint.GlobalStepId =
lngStepId And _
                cUpdateConstraint.IndOperation <>
DeleteOp Then
                cUpdateConstraint.GlobalVersionNo =
strNewVersion

                ' Set the operation to indicate an
insert
                cUpdateConstraint.IndOperation =
InsertOp
            End If
        Else
            If cUpdateConstraint.StepId = lngStepId
And _
                cUpdateConstraint.IndOperation <>
DeleteOp Then
                cUpdateConstraint.VersionNo =
strNewVersion

                ' Set the operation to indicate an
insert
                cUpdateConstraint.IndOperation =
InsertOp
            End If
        End If
    Next lngIndex

    Exit Sub

CreateNewConstraintVersionErr:
    LogErrors Errors
    gstrSource = mstrModuleName &
"CreateNewConstraintVersion"
    On Error GoTo 0
    Err.Raise vbObjectError +
errCreateNewConstraintVersionFailed, _
            mstrSource, _

LoadResString(errCreateNewConstraintVersionFailed)

End Sub
Private Sub Class_Initialize()

    Set mcarrConstraints = New cNodeCollections
    BugMessage "cArrConstraints: Initialize event -
setting Constraint count to 0"

End Sub

Private Sub Class_Terminate()

    Set mcarrConstraints = Nothing
    BugMessage "cArrConstraints: Terminate event
triggered"
```


© 2006 Hewlett-Packard Company. All rights reserved.

```
End Sub

Public Sub Add(ByVal cConstraintToAdd As cConstraint)

    Set cConstraintToAdd.NodeDB =
mcarrConstraints.NodeDB

    ' Retrieve a unique constraint identifier
    cConstraintToAdd.ConstraintId =
cConstraintToAdd.NextIdentifier

    ' Call a procedure to load the constraint record
in the array
    Call mcarrConstraints.Add(cConstraintToAdd)

End Sub
Public Sub Delete(ByVal cOldConstraint As
cConstraint)

    Dim lngDeleteElement As Long
    Dim cConsToDelete As cConstraint

    lngDeleteElement =
QueryConstraintIndex(cOldConstraint.ConstraintId)
    Set cConsToDelete =
mcarrConstraints(lngDeleteElement)

    Call
mcarrConstraints.Delete(cConsToDelete.Position)

    Set cConsToDelete = Nothing

End Sub
Private Function QueryConstraintIndex(lngConstraintId
As Long) _
        As Long

    Dim lngIndex As Integer

    ' Find the element in the array to be deleted
    For lngIndex = 0 To mcarrConstraints.Count - 1

        ' Note: The constraint id is not a primary
key field in
        ' the database - there can be multiple
records with the
        ' same constraint_id but for different
versions of a step
        ' However, since we'll always load the
constraint information
        ' for the latest version of a step, we'll
have just one
        ' constraint record with a given
constraint_id
        If mcarrConstraints(lngIndex).ConstraintId =
lngConstraintId Then
            QueryConstraintIndex = lngIndex
            Exit Function
        End If

    Next lngIndex

    ' Raise error that Constraint has not been found
    ShowError errConstraintNotFound
    On Error GoTo 0
    Err.Raise vbObjectError + errConstraintNotFound,
mstrSource, _
        LoadResString(errConstraintNotFound)

End Function

Public Function QueryConstraint(ByVal lngConstraintId
As Long) _
    As cConstraint

    ' Returns a cConstraint object with the property
values
    ' corresponding to the Constraint Identifier,
lngConstraintId

    Dim lngQueryElement As Long

    lngQueryElement =
QueryConstraintIndex(lngConstraintId)

    ' Set the return value to the queried Constraint
    Set QueryConstraint =
mcarrConstraints(lngQueryElement)

End Function

Public Sub LoadConstraints(ByVal lngWorkspaceId As
Long, rstStepsInWsp As Recordset)

    ' Loads the constraints array with all the
constraints
    ' for the workspace
    Dim recConstraints As Recordset
    Dim qyCons As DAO.QueryDef
    Dim strSql As String
    Dim dtStart As Date

    On Error GoTo LoadConstraintsErr
    mstrSource = mstrModuleName & "LoadConstraints"

    If rstStepsInWsp.RecordCount = 0 Then
        Exit Sub
    End If

    ' First check if the database object has been set
    If mcarrConstraints.NodeDB Is Nothing Then
        On Error GoTo 0
        Err.Raise vbObjectError + errSetDBBeforeLoad,
_
                mstrSource, _
                LoadResString(errSetDBBeforeLoad)
    End If

    dtStart = Now

    ' Select based on the global step id since there
might
    ' be constraints for a global step that run are
executed
    ' for the workspace

    ' This method has the advantage that if the steps
are queried right, everything else follows
    strSql = "Select a.constraint_id, a.step_id,
a.version_no, " & _
        " a.constraint_type, a.global_step_id,
a.global_version_no, " & _
        " a.sequence_no, b.workspace_id " & _
        " from step_constraints a, att_steps b " & _
        " where a.global_step_id = b.step_id " & _
        " and a.global_version_no = b.version_no " &
_
        " and a.global_step_id = [g_s_id] " & _
        " and a.global_version_no = [g_ver_no] " & _
        " and b.archived_flag = [archived] "

    ' Find the highest X-component of the version
number
    strSql = strSql & " AND ( a.step_id = 0 or (
cint( mid( a.version_no, 1, instr( a.version_no, " &
gstrDQ & gstrVerSeparator & gstrDQ & " ) - 1 ) ) = "
& _
        " ( select max( cint( mid( version_no, 1,
instr( version_no, " & gstrDQ & gstrVerSeparator &
gstrDQ & " ) - 1 ) ) ) " & _
        " from att_steps AS d " & _
        " WHERE a.step_id = d.step_id " & _
        " and d.archived_flag = [archived] ) "

    ' Find the highest Y-component of the version
number for the highest X-component
    strSql = strSql & " AND cint( mid( a.version_no,
instr( a.version_no, " & gstrDQ & gstrVerSeparator &
gstrDQ & " ) + 1 ) ) = " & _
        " ( select max( cint( mid( version_no, instr(
version_no, " & gstrDQ & gstrVerSeparator & gstrDQ &
" ) + 1 ) ) ) " & _
        " from att_steps AS y " & _
        " Where a.step_id = y.step_id " & _
        " AND cint( mid( version_no, 1, instr(
version_no, " & gstrDQ & gstrVerSeparator & gstrDQ &
" ) - 1 ) ) = " & _
        " ( select max( cint( mid( version_no, 1,
instr( version_no, " & gstrDQ & gstrVerSeparator &
gstrDQ & " ) - 1 ) ) ) " & _
        " from att_steps AS c " & _
        " WHERE y.step_id = c.step_id " & _
        " and c.archived_flag = [archived] ) ) ) ) "

    ' Order the constraints by sequence within a
given step
    strSql = strSql & " order by a.sequence_no "

    Set qyCons =
mcarrConstraints.NodeDB.CreateQueryDef(gstrEmptyStrin
g, strSql)
    qyCons.Parameters("archived").Value = False

    rstStepsInWsp.MoveFirst

    While Not rstStepsInWsp.EOF

        If Not (rstStepsInWsp!global_flag) Then
            qyCons.Close
```


© 2006 Hewlett-Packard Company. All rights reserved.

```
            BugMessage "Query constraints Read + load
took: " & CStr(DateDiff("s", dtStart, Now))
            Exit Sub
        End If

        qyCons.Parameters("g_s_id").Value =
rstStepsInWsp!step_id
        qyCons.Parameters("g_ver_no").Value =
rstStepsInWsp!version_no

        Set recConstraints =
qyCons.OpenRecordset(dbOpenSnapshot)

        Call
LoadRecordsetInConstraintArray(recConstraints)
        recConstraints.Close

        rstStepsInWsp.MoveNext
    Wend

    qyCons.Close
    BugMessage "Query constraints Read + load took: "
& CStr(DateDiff("s", dtStart, Now))

    Exit Sub

LoadConstraintsErr:
    LogErrors Errors
    gstrSource = mstrModuleName & "LoadConstraints"
    On Error GoTo 0
    Err.Raise vbObjectError + errLoadDataFailed, _
            mstrSource, _
            LoadResString(errLoadDataFailed)

End Sub
Public Sub UnloadStepConstraints(ByVal lngStepId As
Long)

    ' Unloads all the constraints for the workspace
from
    ' the constraints array

    Dim lngIndex As Long

    ' Find all constraints in the array with a
matching step id
    ' It is important to step in reverse order
through the array,
    ' since we delete constraint records!
    For lngIndex = mcarrConstraints.Count - 1 To 0
Step -1
        If mcarrConstraints(lngIndex).GlobalStepId =
lngStepId Then

            ' Unload the constraint from the array
            Call mcarrConstraints.Unload(lngIndex)

        End If
    Next lngIndex

End Sub
Public Sub UnloadConstraint(cOldConstraint As
cConstraint)

    ' Unloads the constraint from the constraints
array

    Dim lngDeleteElement As Long

    lngDeleteElement =
QueryConstraintIndex(cOldConstraint.ConstraintId)

    Call mcarrConstraints.Unload(lngDeleteElement)

End Sub
Private Sub LoadRecordsetInConstraintArray(ByVal
recConstraints As Recordset)
    ' Loads all the constraint records in the passed
in
    ' recordset into the array

    Dim cNewConstraint As cConstraint

    On Error GoTo LoadRecordsetInConsArrayErr
    mstrSource = mstrModuleName &
"LoadRecordsetInConstraintArray"

    If recConstraints.RecordCount = 0 Then
        Exit Sub
    End If

    recConstraints.MoveFirst
    While Not recConstraints.EOF
        Set cNewConstraint = New cConstraint

        ' Initialize Constraint values
        cNewConstraint.ConstraintId =
CLng(ErrorOnNullField(recConstraints,
"Constraint_id"))
        cNewConstraint.StepId =
CLng(ErrorOnNullField(recConstraints, "step_id"))
        cNewConstraint.VersionNo =
CStr(ErrorOnNullField(recConstraints, "version_no"))

        cNewConstraint.GlobalStepId =
CLng(ErrorOnNullField(recConstraints,
"global_step_id"))
        cNewConstraint.GlobalVersionNo =
CStr(ErrorOnNullField(recConstraints,
"global_version_no"))
        cNewConstraint.SequenceNo =
CInt(ErrorOnNullField(recConstraints, "sequence_no"))

        cNewConstraint.WorkspaceId =
CLng(ErrorOnNullField(recConstraints,
FLD_ID_WORKSPACE))
        cNewConstraint.ConstraintType =
CInt(ErrorOnNullField(recConstraints,
"constraint_type"))

        ' Add this record to the array of Constraints
        mcarrConstraints.Load cNewConstraint

        Set cNewConstraint = Nothing
        recConstraints.MoveNext
    Wend

    Exit Sub

LoadRecordsetInConsArrayErr:
    LogErrors Errors
    gstrSource = mstrModuleName &
"LoadRecordsetInConstraintArray"
    On Error GoTo 0
    Err.Raise vbObjectError + errLoadRsInArrayFailed,
_
            mstrSource, _
            LoadResString(errLoadRsInArrayFailed)

End Sub

Public Function ConstraintsForStep( _
        ByVal lngStepId As Long, _
        ByVal strVersionNo As String, _
        Optional ByVal intConstraintType As
ConstraintType = 0, _
        Optional ByVal blnSort As Boolean = True, _
        Optional ByVal blnGlobal As Boolean = False,
_
        Optional ByVal blnGlobalConstraintsOnly As
Boolean = False) _
        As Variant

    ' Returns a variant containing an array of
cConstraint objects,
    ' containing all the constraints that have been
defined for the
    ' given step. If the Global flag is set to true,
the
    ' search will be made for all the constraints
that have
    ' a matching global_step_id

    Dim lngIndex As Long
    Dim cStepConstraint() As cConstraint
    Dim lngConstraintCount As Long
    Dim cTempConstraint As cConstraint

    On Error GoTo ConstraintsForStepErr
    mstrSource = mstrModuleName &
"ConstraintsForStep"

    lngConstraintCount = 0

    ' Find each element in the constraints array
    For lngIndex = 0 To mcarrConstraints.Count - 1
        ' If a constraint type has been specified
then check
        ' if the constraint type for the record
matches the
        ' passed in type
        Set cTempConstraint =
mcarrConstraints(lngIndex)
        If Not blnGlobal Then
            If cTempConstraint.StepId = lngStepId And
_
                cTempConstraint.VersionNo =
strVersionNo And _
                cTempConstraint.IndOperation <>
DeleteOp And _
```


© 2006 Hewlett-Packard Company. All rights reserved.

```
                    (intConstraintType = 0 Or _
                    cTempConstraint.ConstraintType =
intConstraintType) Then
                ' We have a matching constraint for
the given step
                AddArrayElement cStepConstraint, _
                        cTempConstraint,
lngConstraintCount
            End If
        Else
            If cTempConstraint.GlobalStepId =
lngStepId And _
                    cTempConstraint.GlobalVersionNo =
strVersionNo And _
                    cTempConstraint.IndOperation <>
DeleteOp Then
                If blnGlobalConstraintsOnly = False
Or _
                        (blnGlobalConstraintsOnly And
_
                        cTempConstraint.StepId = 0
And _
                        cTempConstraint.VersionNo =
gstrMinVersion) Then

                    ' We have a matching constraint
for the global step
                    AddArrayElement cStepConstraint,
_
                            cTempConstraint,
lngConstraintCount
                End If
            End If
        End If

    Next lngIndex

    ' Set the return value of the function to the
array of
    ' constraints that has been built above
    If lngConstraintCount = 0 Then
        ConstraintsForStep = Empty
    Else
        ConstraintsForStep = cStepConstraint()
    End If

    ' Sort the constraints
    If blnSort Then
        Call QuickSort(ConstraintsForStep)
    End If

    Exit Function

ConstraintsForStepErr:
    LogErrors Errors
    On Error GoTo 0
    Err.Raise vbObjectError +
errConstraintsForStepFailed, _
            mstrSource, _

LoadResString(errConstraintsForStepFailed)

End Function
```

```
Private Sub AddArrayElement(ByRef arrNodes() As
cConstraint, _
        ByVal objToAdd As cConstraint, _
        ByRef lngCount As Long)
    ' Adds the passed in object to the array

    ' Increase the array dimension and add the object
to it
    ReDim Preserve arrNodes(lngCount)
    Set arrNodes(lngCount) = objToAdd
    lngCount = lngCount + 1

End Sub

Public Function ConstraintsForWsp( _
        ByVal lngWorkspaceId As Long, _
        Optional ByVal intConstraintType As Integer =
0, _
        Optional ByVal blnSort As Boolean = True, _
        Optional ByVal blnGlobalConstraintsOnly As
Boolean = False) _
        As Variant

    ' Returns a variant containing an array of
cConstraint objects,
    ' containing all the constraints that have been
defined for the
    ' given workspace.

    Dim lngIndex As Long
    Dim cWspConstraint() As cConstraint
    Dim lngConstraintCount As Long
    Dim cTempConstraint As cConstraint

    On Error GoTo ConstraintsForWspErr
    mstrSource = mstrModuleName & "ConstraintsForWsp"

    lngConstraintCount = 0

    ' Find each element in the constraints array
    For lngIndex = 0 To mcarrConstraints.Count - 1
        ' If a constraint type has been specified
then check
        ' if the constraint type for the record
matches the
        ' passed in type
        Set cTempConstraint =
mcarrConstraints(lngIndex)
        If cTempConstraint.WorkspaceId =
lngWorkspaceId And _
                cTempConstraint.IndOperation <>
DeleteOp And _
                (intConstraintType = 0 Or _
                cTempConstraint.ConstraintType =
intConstraintType) Then

            If blnGlobalConstraintsOnly = False Or _
                    (blnGlobalConstraintsOnly And _
                    cTempConstraint.StepId = 0 And _
                    cTempConstraint.VersionNo =
gstrMinVersion) Then
```

```
                    ' We have a matching constraint for
the workspace
                    AddArrayElement cWspConstraint, _
                            cTempConstraint,
lngConstraintCount
                End If
            End If
        Next lngIndex

        ' Set the return value of the function to the
array of
        ' constraints that has been built above
        If lngConstraintCount = 0 Then
            ConstraintsForWsp = Empty
        Else
            ConstraintsForWsp = cWspConstraint()
        End If

        ' Sort the constraints
        If blnSort Then
            Call QuickSort(ConstraintsForWsp)
        End If

        Exit Function

    ConstraintsForWspErr:
        LogErrors Errors
        On Error GoTo 0
        Err.Raise vbObjectError +
    errConstraintsForWspFailed, _
                mstrSource, _
                LoadResString(errConstraintsForWspFailed)

    End Function
    Public Function PreConstraintsForStep( _
            ByVal lngStepId As Long, _
            ByVal strVersionNo As String, _
            Optional ByVal blnSort As Boolean) As Variant

        ' Returns a variant containing an array of
    cConstraint objects,
        ' containing all the pre-execution constraints
    that have
        ' been defined for the given step_id and version

        ' Call a function that will return a variant
    containing
        ' all the constraints of the passed in type
        PreConstraintsForStep =
    ConstraintsForStep(lngStepId, _
                strVersionNo, gintPreStep, blnSort)

    End Function
    Public Function PostConstraintsForStep( _
            ByVal lngStepId As Long, _
            ByVal strVersionNo As String, _
            Optional ByVal blnSort As Boolean) As Variant

        ' Returns a variant containing an array of
    cConstraint objects,
        ' containing all the Post-execution constraints
    that have
        ' been defined for the given step_id and version
```


© 2006 Hewlett-Packard Company. All rights reserved.

```
    ' Call a function that will return a variant
containing
    ' all the constraints of the passed in type
    PostConstraintsForStep =
ConstraintsForStep(lngStepId, _
            strVersionNo, gintPostStep, blnSort)

End Function
Public Function PostConstraintsForWsp( _
        ByVal lngWorkspaceId As Long, _
        Optional ByVal blnSort As Boolean) As Variant

    ' Returns a variant containing an array of
cConstraint objects,
    ' containing all the Post-execution globals that
have
    ' been defined for the workspace

    ' Call a function that will return a variant
containing
    ' all the constraints of the passed in type
    PostConstraintsForWsp =
ConstraintsForWsp(lngWorkspaceId, _
            gintPostStep, blnSort, True)

End Function
Public Function PreConstraintsForWsp( _
        ByVal lngWorkspaceId As Long, _
        Optional ByVal blnSort As Boolean) As Variant

    ' Returns a variant containing an array of
cConstraint objects,
    ' containing all the Pre-execution globals that
have
    ' been defined for the workspace

    ' Call a function that will return a variant
containing
    ' all the constraints of the passed in type
    PreConstraintsForWsp =
ConstraintsForWsp(lngWorkspaceId, _
            gintPreStep, blnSort, True)

End Function
Public Property Get ConstraintCount() As Long

    ConstraintCount = mcarrConstraints.Count

End Property
```

cArrParameters.cls

```
VERSION 1.0 CLASS
BEGIN
  MultiUse = -1  'True
END
Attribute VB_Name = "cArrParameters"
Attribute VB_GlobalNameSpace = False
Attribute VB_Creatable = True
Attribute VB_PredeclaredId = False
Attribute VB_Exposed = False
'  FILE:       cArrParameters.cls
'              Microsoft TPC-H Kit Ver. 1.00
'              Copyright Microsoft, 1999
'              All Rights Reserved
'
'
'  PURPOSE:    Implements an array of cParameter
objects.
'              Type-safe wrapper around
cNodeCollections.
'              Also contains additional functions to
determine parameter
'              values, validation functions, etc.
'  Contact:    Reshma Tharamal
(reshmat@microsoft.com)
'
Option Explicit

Private mcarrParameters As cNodeCollections

' Used to indicate the source module name when errors
' are raised by this class
Private mstrSource As String
Private Const mstrModuleName As String =
"cArrParameters."

Public Sub InitBuiltInsForRun(lWspId As Long, lRunId
As Long)

    Dim cParamRec As cParameter

    ' Initialize the values of the run_id and
output_dir built-in parameters and save them
    ' to the database
    Set cParamRec = GetParameterValue(lWspId,
PARAM_RUN_ID)
    cParamRec.ParameterValue = CStr(lRunId)
    Call Modify(cParamRec)

    Set cParamRec = GetParameterValue(lWspId,
PARAM_OUTPUT_DIR)
    cParamRec.ParameterValue = GetDefaultDir(lWspId,
Me)
    cParamRec.ParameterValue =
cParamRec.ParameterValue & gstrFileSeparator &
CStr(lRunId)
    Call Modify(cParamRec)

    Call SaveParametersInWsp(lWspId)

End Sub


Public Property Set ParamDatabase(vdata As Database)

    Set mcarrParameters.NodeDB = vdata

End Property
Public Sub Modify(cModifiedParam As cParameter)

    ' First check if the parameter record is valid
    Call CheckDupParamName(cModifiedParam)

    Call mcarrParameters.Modify(cModifiedParam)

End Sub
Public Sub Load(ByRef cParamToAdd As cParameter)

    Call mcarrParameters.Load(cParamToAdd)

End Sub
Public Sub Add(ByRef cParamToAdd As cParameter)

    Set cParamToAdd.NodeDB = mcarrParameters.NodeDB

    ' First check if the parameter record is valid
    Call Validate(cParamToAdd)

    ' Retrieve a unique parameter identifier
    cParamToAdd.ParameterId =
cParamToAdd.NextIdentifier

    Call mcarrParameters.Add(cParamToAdd)

End Sub

Public Sub Unload(lngParamToDelete As Long)

    Dim lngDeleteElement As Long

    lngDeleteElement = QueryIndex(lngParamToDelete)

    Call mcarrParameters.Unload(lngDeleteElement)

End Sub

Public Sub SaveParametersInWsp(ByVal lngWorkspace As
Long)
    ' Calls a procedure to commit all changes to the
parameters
    ' for the passed in workspace.

    ' Call a procedure to save all parameter records
for the
    ' workspace
    Call mcarrParameters.Save(lngWorkspace)

End Sub
Public Function GetParameterValue(ByVal lngWorkspace
As Long, _
        ByVal strParamName As String) As cParameter
    ' Returns the value for the passed in workspace
parameter

    Dim cParamRec As cParameter
    Dim lngIndex As Long

    On Error GoTo GetParameterValueErr

    ' Find all parameters in the array with a
matching workspace id
    For lngIndex = 0 To mcarrParameters.Count - 1
```


© 2006 Hewlett-Packard Company. All rights reserved.

```
        Set cParamRec = mcarrParameters(lngIndex)
        If cParamRec.WorkspaceId = lngWorkspace And _
                cParamRec.ParameterName =
strParamName Then

            Set GetParameterValue = cParamRec
            Exit For
        End If
    Next lngIndex

    If lngIndex > mcarrParameters.Count - 1 Then
        ' The parameter has not been defined for the
workspace
        ' Raise an error
        On Error GoTo 0
        Err.Raise vbObjectError +
errParamNameInvalid, _
                mstrModuleName & "GetParameterValue",
_
                LoadResString(errParamNameInvalid)
    End If

    Exit Function

GetParameterValueErr:
    ' Log the error code raised by Visual Basic
    Call LogErrors(Errors)
    gstrSource = mstrModuleName & "GetParameterValue"
    On Error GoTo 0
    Err.Raise vbObjectError + errGetParamValueFailed,
_
            gstrSource, _
            LoadResString(errGetParamValueFailed)

End Function
Public Sub Delete(lngParamToDelete As Long)
    ' Delete the passed in parameter

    Dim lngDeleteElement As Long

    lngDeleteElement = QueryIndex(lngParamToDelete)
    Call mcarrParameters.Delete(lngDeleteElement)

End Sub
Private Function QueryIndex(lngParameterId As Long)
As Long

    Dim lngIndex As Long

    ' Find the matching parameter record in the array
    For lngIndex = 0 To mcarrParameters.Count - 1
        If mcarrParameters(lngIndex).ParameterId =
lngParameterId And _

mcarrParameters(lngIndex).IndOperation <> DeleteOp
Then
            QueryIndex = lngIndex
            Exit Function
        End If
    Next lngIndex

    ' Raise error that parameter has not been found
    On Error GoTo 0
    Err.Raise vbObjectError + errParamNotFound,
"cArrParameters.QueryIndex", _
        LoadResString(errParamNotFound)

End Function

Public Function QueryParameter(lngParameterId As
Long) _
        As cParameter

    Dim lngQueryElement As Long

    lngQueryElement = QueryIndex(lngParameterId)

    ' Return the queried parameter object
    Set QueryParameter =
mcarrParameters(lngQueryElement)

End Function
Public Property Get ParameterCount() As Long

    ParameterCount = mcarrParameters.Count

End Property
Public Property Get Item(lngIndex As Long) As
cParameter
Attribute Item.VB_UserMemId = 0

    Set Item = mcarrParameters(lngIndex)

End Property

Public Sub Validate(ByVal cParamToValidate As
cParameter)
    ' This procedure is necessary since the class
cannot validate
    ' all the parameter properties on it's own. This
is 'coz we
    ' might have created new parameters in the
workspace, but not
    ' saved them to the database yet - hence the
duplicate check
    ' has to be repeated in the array

    Dim lngIndex As Long
    Dim cTempParam As cParameter

    On Error GoTo ValidateErr

    ' Check if the parameter name already exists in
the workspace
    For lngIndex = 0 To mcarrParameters.Count - 1
        Set cTempParam = mcarrParameters(lngIndex)
        If cTempParam.WorkspaceId =
cParamToValidate.WorkspaceId And _
                cTempParam.ParameterName =
cParamToValidate.ParameterName And _
                cTempParam.IndOperation <> DeleteOp
Then
            On Error GoTo 0
            Err.Raise vbObjectError +
errDuplicateParameterName, _
                mstrSource,
LoadResString(errDuplicateParameterName)
        End If
    Next lngIndex

    Exit Sub

ValidateErr:
    LogErrors Errors
    mstrSource = mstrModuleName & "Validate"
    On Error GoTo 0
    Err.Raise vbObjectError + errValidateFailed, _
        mstrSource, LoadResString(errValidateFailed)

End Sub
Public Sub CheckDupParamName(ByVal cParamToValidate
As cParameter)

    Dim lngIndex As Long
    Dim cTempParam As cParameter

    ' Check if the parameter name already exists in
the workspace
    For lngIndex = 0 To mcarrParameters.Count - 1
        Set cTempParam = mcarrParameters(lngIndex)
        If cTempParam.WorkspaceId =
cParamToValidate.WorkspaceId And _
                cTempParam.ParameterName =
cParamToValidate.ParameterName And _
                cTempParam.ParameterId <>
cParamToValidate.ParameterId And _
                cTempParam.IndOperation <> DeleteOp
Then
            ShowError errDuplicateParameterName
            On Error GoTo 0
            Err.Raise vbObjectError +
errDuplicateParameterName, _
                mstrSource,
LoadResString(errDuplicateParameterName)
        End If
    Next lngIndex

End Sub

Private Sub Class_Initialize()

    'bugmessage "cArrParameters: Initialize event -
setting parameter count to 0"
    Set mcarrParameters = New cNodeCollections

End Sub


Private Sub Class_Terminate()

    Set mcarrParameters = Nothing

End Sub
```

cArrSteps.cls

```
VERSION 1.0 CLASS
```


© 2006 Hewlett-Packard Company. All rights reserved.

```
BEGIN
  MultiUse = -1  'True
END
Attribute VB_Name = "cArrSteps"
Attribute VB_GlobalNameSpace = False
Attribute VB_Creatable = True
Attribute VB_PredeclaredId = False
Attribute VB_Exposed = False
'  FILE:       cArrSteps.cls
'              Microsoft TPC-H Kit Ver. 1.00
'              Copyright Microsoft, 1999
'              All Rights Reserved
'
'
'  PURPOSE:    Implements an array of cStep objects.
'              Type-safe wrapper around
cNodeCollections.
'              Also contains additional functions to
update parent version
'              on substeps, validation functions,
etc.
'  Contact:    Reshma Tharamal
(reshmat@microsoft.com)
'
Option Explicit

Private mcarrSteps As cNodeCollections

' Used to indicate the source module name when errors
' are raised by this class
Private mstrSource As String
Private Const mstrModuleName As String = "cArrSteps."

Public Sub Unload(lngStepToDelete As Long)

    Dim lngDeleteElement As Long
    Dim cUnloadStep As cStep

    lngDeleteElement =
QueryStepIndex(lngStepToDelete)
    Set cUnloadStep = QueryStep(lngStepToDelete)

    ' First unload all iterators for the step
    Call cUnloadStep.UnloadIterators

    ' Unload the step from the collection
    Call mcarrSteps.Unload(lngDeleteElement)

End Sub
Public Sub Modify(cModifiedStep As cStep)

    Dim iAppend As Integer
    Dim sLabel As String

    On Error GoTo ModifyErr

    iAppend = 0
    sLabel = cModifiedStep.StepLabel

    Validate cModifiedStep

    Call mcarrSteps.Modify(cModifiedStep)
    Exit Sub

ModifyErr:
    ' If the error raised by the add function is due
to a duplication
    ' of the step label, then try to generate a
unique label
    If Err.Number - vbObjectError =
errStepLabelUnique Then
        iAppend = iAppend + 1
        cModifiedStep.StepLabel = sLabel &
CStr(iAppend)
        ' Try to insert the step record again
        Resume
    End If

    ' Log the error code raised by Visual Basic
    Call LogErrors(Errors)
    On Error GoTo 0
    Err.Raise vbObjectError + errModifyStepFailed, _
            gstrSource, _
            LoadResString(errModifyStepFailed)

End Sub
Public Sub UpdateParentVersion(ByVal lngStepId As
Long, _
        ByVal strNewVersion As String, _
        ByVal strOldVersion As String, _
        ByVal intStepType As Integer)

    ' Does all the processing needed to update the
parent version
    ' number on all the sub-steps for a given step
    ' It updates the parent version no in the
database for all
    ' sub-steps of the passed in step id
    ' It also updates the parent version number on
all sub-steps
    ' in the array to the new version passed in

    Dim lngIndex As Long
    Dim cUpdateStep As cStep

    On Error GoTo UpdateParentVersionErr

    If intStepType <> gintManagerStep Then
        ' Only a manager can have sub-steps - if the
passed
        ' in step is not a manager, exit
        Exit Sub
    End If

    ' For all steps in the array
    For lngIndex = 0 To mcarrSteps.Count - 1

        Set cUpdateStep = mcarrSteps(lngIndex)

        ' If the current step is a sub-step of the
passed in step
        If cUpdateStep.ParentStepId = lngStepId And _
                cUpdateStep.ParentVersionNo =
strOldVersion And _
                Not cUpdateStep.ArchivedFlag Then
            ' Update the parent version number for
the sub-step
            ' in the array
            cUpdateStep.ParentVersionNo =
strNewVersion

            ' Update the parent version number for
the sub-step
            ' in the array
            Call Modify(cUpdateStep)

        End If
    Next lngIndex

    Exit Sub

UpdateParentVersionErr:
    LogErrors Errors
    mstrSource = mstrModuleName &
"UpdateParentVersion"
    On Error GoTo 0
    Err.Raise vbObjectError +
errUpdateParentVersionFailed, _
            mstrSource, _

LoadResString(errUpdateParentVersionFailed)

End Sub
Private Sub Validate(cCheckStep As cStep)

    ' Step validations that depend on other steps in
the collection

    Dim lngIndex As Long

    ' Ensure that the step label is unique in the
workspace
    For lngIndex = 0 To mcarrSteps.Count - 1

        ' If the current step is a sub-step of the
passed in step
        If mcarrSteps(lngIndex).WorkspaceId =
cCheckStep.WorkspaceId And _
                mcarrSteps(lngIndex).StepLabel =
cCheckStep.StepLabel And _
                mcarrSteps(lngIndex).StepId <>
cCheckStep.StepId And _
                mcarrSteps(lngIndex).IndOperation <>
DeleteOp Then
            On Error GoTo 0
            Err.Raise vbObjectError +
errStepLabelUnique, _
                    mstrModuleName & "Validate", _
                    LoadResString(errStepLabelUnique)
        End If
    Next lngIndex

End Sub

Public Sub ValidateStep(cCheckStep As cStep)

    On Error GoTo ValidateStepErr
```


© 2006 Hewlett-Packard Company. All rights reserved.

```
    'Public wrapper for Validate function (2 many
Validates)
    Call Validate(cCheckStep)

    Exit Sub

ValidateStepErr:
    ShowError errStepLabelUnique
    On Error GoTo 0
    Err.Raise vbObjectError + errValidateFailed, _
            gstrSource, _
            LoadResString(errValidateFailed)
End Sub

Private Sub Class_Initialize()

    BugMessage "cArrSteps: Initialize event - setting
step count to 0"
    Set mcarrSteps = New cNodeCollections

End Sub

Private Sub Class_Terminate()

    BugMessage "cArrSteps: Terminate event triggered"
    Set mcarrSteps = Nothing

End Sub

Public Sub Add(ByVal cStepToAdd As cStep)

    Dim iAppend As Integer
    Dim sLabel As String

    On Error GoTo AddErr

    iAppend = 0
    sLabel = cStepToAdd.StepLabel

    Set cStepToAdd.NodeDB = mcarrSteps.NodeDB

    ' Retrieve a unique step identifier
    cStepToAdd.StepId = cStepToAdd.NextStepId

    Validate cStepToAdd

    ' Call a procedure to add the step record
    Call mcarrSteps.Add(cStepToAdd)

    ' Call a procedure to add all iterators for the
step
    cStepToAdd.AddAllIterators

    Exit Sub

AddErr:
    ' If the error raised by the add function is due
to a duplication
    ' of the step label, then try to generate a
unique label
    If Err.Number - vbObjectError =
errStepLabelUnique Then
        iAppend = iAppend + 1
        cStepToAdd.StepLabel = sLabel & CStr(iAppend)
        ' Try to insert the step record again
        Resume
    End If

    ' Log the error code raised by Visual Basic
    Call LogErrors(Errors)
    On Error GoTo 0
    Err.Raise vbObjectError + errInsertStepFailed, _
            gstrSource, _
            LoadResString(errInsertStepFailed)

End Sub
Public Sub Load(cStepToLoad As cStep)

    Call mcarrSteps.Load(cStepToLoad)

End Sub
Public Sub SaveStepsInWsp(ByVal lngWorkspace As Long)
    ' Calls a procedure to commit all changes to the
steps
    ' in the passed in workspace.

    Dim lngIndex As Integer

    ' Find all steps in the array with a matching
workspace id
    ' It is important to step in reverse order
through the array,
    ' since we delete step records sometimes!
    For lngIndex = mcarrSteps.Count - 1 To 0 Step -1
        If mcarrSteps(lngIndex).WorkspaceId =
lngWorkspace Then

            ' Call a procedure to commit all changes
to the
            ' Step record, if any
            Call CommitStep(mcarrSteps(lngIndex),
lngIndex)

        End If
    Next lngIndex

End Sub
Private Sub CommitStep(ByVal cCommitStep As cStep, _
        ByVal intIndex As Integer)
    ' This procedure checks if any changes have been
made to the
    ' passed in Step. If so, it calls the step
methods to commit
    ' the changes.

    ' First commit all changes to the iterator
records for
    ' the step
    cCommitStep.SaveIterators

    Call mcarrSteps.Commit(cCommitStep, intIndex)

End Sub
Public Sub Delete(lngStepToDelete As Long)

    Dim lngDeleteElement As Long

    lngDeleteElement =
QueryStepIndex(lngStepToDelete)
    Call mcarrSteps.Delete(lngDeleteElement)

End Sub
Public Function QueryStepIndex(lngStepId As Long) As
Long

    Dim lngIndex As Long

    ' Find the element in the array that corresponds
to the
    ' passed in step id - note that while there will
be multiple
    ' versions of a step in the database, only one
version will
    ' be currently loaded in the array - meaning that
the stepid
    ' is enough to uniquely identify a step
    For lngIndex = 0 To mcarrSteps.Count - 1
        If mcarrSteps(lngIndex).StepId = lngStepId
Then
            QueryStepIndex = lngIndex
            Exit Function
        End If
    Next lngIndex

    ' Raise error that step has not been found
    On Error GoTo 0
    Err.Raise vbObjectError + errStepNotFound,
mstrSource, _
        LoadResString(errStepNotFound)

End Function

Public Function QueryStep(ByVal lngStepId As Long) As
cStep

    ' Populates the passed in cStep object with the
property
    ' values corresponding to the Step Identifier,
lngStepId

    Dim lngQueryElement As Integer

    lngQueryElement = QueryStepIndex(lngStepId)

    ' Initialize the passed in step object to the
queried step
    Set QueryStep = mcarrSteps(lngQueryElement)

End Function
Public Property Get Item(ByVal Position As Long) As
cStep
Attribute Item.VB_UserMemId = 0

    ' Returns the element at the passed in position
in the array
    If Position >= 0 And Position < mcarrSteps.Count
Then
        Set Item = mcarrSteps(Position)
```


© 2006 Hewlett-Packard Company. All rights reserved.

```
    Else
        On Error GoTo 0
        Err.Raise vbObjectError +
errItemDoesNotExist, mstrSource, _
            LoadResString(errItemDoesNotExist)
    End If

End Property
Public Property Set Item(ByVal Position As Long, _
        ByVal cStepRec As cStep)

    ' Returns the element at the passed in position
in the array
    If Position >= 0 And Position < mcarrSteps.Count
Then
        Set mcarrSteps(Position) = cStepRec
    Else
        On Error GoTo 0
        Err.Raise vbObjectError +
errItemDoesNotExist, mstrSource, _
            LoadResString(errItemDoesNotExist)
    End If

End Property
Public Property Set StepDB(vdata As Database)

    Set mcarrSteps.NodeDB = vdata

End Property
Public Function SubSteps(ByVal lngStepId As Long, _
        ByVal strVersionNo As String) As Variant

    ' Returns a variant containing an array of all
the substeps
    ' for the passed in step

    Dim intIndex As Integer
    Dim cSubSteps() As cStep
    Dim lngStepCount As Long
    Dim cQueryStep As cStep

    On Error GoTo SubStepsErr

    lngStepCount = 0

    Set cQueryStep = QueryStep(lngStepId)

    ' Only a manager can have sub-steps
    If cQueryStep.StepType = gintManagerStep Then

        ' For each element in the Steps array
        For intIndex = 0 To mcarrSteps.Count - 1
            ' Check if the parent step id and parent
version number
            ' match the passed in step
            If mcarrSteps(intIndex).ParentStepId =
lngStepId And _

mcarrSteps(intIndex).ParentVersionNo = strVersionNo
And _
                    mcarrSteps(intIndex).IndOperation
<> DeleteOp Then
                ' Increase the array dimension and
add the step
                ' to it
                ReDim Preserve
cSubSteps(lngStepCount)
                Set cSubSteps(lngStepCount) =
mcarrSteps(intIndex)
                lngStepCount = lngStepCount + 1

            End If
        Next intIndex

    End If

    ' Set the return value of the function to the
array of
    ' Steps that has been built above
    If lngStepCount = 0 Then
        SubSteps = Empty
    Else
        SubSteps = cSubSteps()
    End If

    Exit Function

SubStepsErr:
    LogErrors Errors
    mstrSource = mstrModuleName & "SubSteps"
    On Error GoTo 0
    Err.Raise vbObjectError + errSubStepsFailed, _
            mstrSource, _
            LoadResString(errSubStepsFailed)

End Function

Public Property Get StepCount() As Integer

    StepCount = mcarrSteps.Count

End Property
```

cAsyncShell.cls

```
VERSION 1.0 CLASS
BEGIN
  MultiUse = -1  'True
END
Attribute VB_Name = "cAsyncShell"
Attribute VB_GlobalNameSpace = False
Attribute VB_Creatable = True
Attribute VB_PredeclaredId = False
Attribute VB_Exposed = False
'-------------------------------------------------
--------------------------
' Copyright © 1997 Microsoft Corporation. All rights
reserved.
'
' You have a royalty-free right to use, modify,
reproduce and distribute the
' Sample Application Files (and/or any modified
version) in any way you find
' useful, provided that you agree that Microsoft has
no warranty, obligations or
' liability for any Sample Application Files.
'-------------------------------------------------
--------------------------

Option Explicit

' Used to indicate the source module name when errors
' are raised by this class
Private mstrSource As String
Private Const mstrModuleName As String =
"cAsyncShell."

Public Event Terminated()

Private WithEvents moTimer As cTimerSM
Attribute moTimer.VB_VarHelpID = -1
Private proc As PROCESS_INFORMATION
Private mfShelling As Boolean


'-------------------------------------------------
--------------------------
'Initialization and cleanup:

Private Sub Class_Initialize()
    Set moTimer = New cTimerSM
End Sub

Private Sub Class_Terminate()
    If mfShelling Then CloseHandle proc.hProcess
End Sub

'-------------------------------------------------
--------------------------
'Shelling:

Public Sub Shell(CommandLine As String, Optional
PollingInterval As Long = 1000)
    Dim Start As STARTUPINFO

    If mfShelling Then
        On Error GoTo 0
        Err.Raise vbObjectError + errInstanceInUse, _
                mstrSource, _
                LoadResString(errInstanceInUse)
    End If
    mfShelling = True

    ' Initialize the STARTUPINFO structure:
    Start.cb = Len(Start)
    Start.dwFlags = STARTF_USESHOWWINDOW
    Start.wShowWindow = SW_SHOWMINNOACTIVE

    ' Start the shelled application:
    CreateProcessA 0&, CommandLine, 0&, 0&, 1&, _
        NORMAL_PRIORITY_CLASS, 0&, 0&, Start, proc
```


© 2006 Hewlett-Packard Company. All rights reserved.

```
    With moTimer
        If PollingInterval > 0 Then
            .Interval = PollingInterval
        Else
            .Interval = 1000
        End If
        .Enabled = True
    End With
End Sub
'-----------------------------------------------------
--------------------------
'Aborting:
Public Sub Abort()
    Dim nCode As Long
'    Dim X As Integer
'    Dim ReturnVal As Integer

    On Error GoTo AbortErr

    If Not mfShelling Then
        Call WriteError(errProgramError, mstrSource)
    Else
'        If IsWindow(proc.hProcess) = False Then Exit
Sub
'
'        If (GetWindowLong(proc.hProcess, GWL_STYLE)
And WS_DISABLED) Then Exit Sub
'
'        If IsWindow(proc.hProcess) Then
'            If Not (GetWindowLong(proc.hProcess,
GWL_STYLE) And WS_DISABLED) Then
'                X = PostMessage(proc.hProcess,
WM_CANCELMODE, 0, 0&)
'                X = PostMessage(proc.hProcess,
WM_CLOSE, 0, 0&)
'            End If
'        End If

        If TerminateProcess(proc.hProcess, 0&) = 0
Then
            Debug.Print "Unable to terminate process:
" & proc.hProcess
            Call
WriteError(errTerminateProcessFailed, mstrSource, _
                    ApiError(GetLastError()))
        Else
            ' Should always come here!
            GetExitCodeProcess proc.hProcess, nCode
            If nCode = STILL_ACTIVE Then
                ' Write an error and close the
handles to the
                ' process anyway
                Call
WriteError(errTerminateProcessFailed, mstrSource)
            End If
        End If

        ' Close all open handles to the shelled
process, even
        ' if any of the above calls error out
        CloseHandle proc.hProcess
        moTimer.Enabled = False
        mfShelling = False
        RaiseEvent Terminated

    End If

    Exit Sub

AbortErr:
    Call LogErrors(Errors)
    mstrSource = mstrModuleName & "Abort"
    On Error GoTo 0
    Err.Raise vbObjectError + errProgramError, _
        mstrSource, _
        LoadResString(errProgramError)

End Sub
Private Sub moTimer_Timer()
    Dim nCode As Long

    GetExitCodeProcess proc.hProcess, nCode
    If nCode <> STILL_ACTIVE Then
        CloseHandle proc.hProcess
        moTimer.Enabled = False
        mfShelling = False
        RaiseEvent Terminated
    End If
End Sub
```

cConnDtl.cls

```
VERSION 1.0 CLASS
BEGIN
  MultiUse = -1  'True
END
Attribute VB_Name = "cConnDtl"
Attribute VB_GlobalNameSpace = False
Attribute VB_Creatable = True
Attribute VB_PredeclaredId = False
Attribute VB_Exposed = False
'  FILE:        cConnDtl.cls
'               Microsoft TPC-H Kit Ver. 1.00
'               Copyright Microsoft, 1999
'               All Rights Reserved
'
'
'  PURPOSE:     Encapsulates the properties and
methods of a connection.
'               Contains functions to insert, update
and delete
'               connection_dtls records from the
database.
'  Contact:     Reshma Tharamal
(reshmat@microsoft.com)
'
Option Explicit
Option Base 0

' Local variable(s) to hold property value(s)
Public WorkspaceId As Long
Public ConnNameId As Long
Public ConnName As String
Public ConnectionString As String
Public ConnType As ConnectionType
Public Position As Long
Public NodeDB As Database

Private mintOperation As Operation

' Used to indicate the source module name when errors
' are raised by this class
Private mstrSource As String
Private Const mstrModuleName As String = "cConnDtl."

' The cSequence class is used to generate unique
Connection identifiers
Private mConnectionSeq As cSequence

' The StringSM class is used to carry out string
operations
Private mFieldValue As cStringSM

Private Sub AssignParameters(qyExec As DAO.QueryDef)
    ' Assigns values to the parameters in the
querydef object
    ' The parameter names are cryptic to
differentiate them from the field names.
    ' When the parameter names are the same as the
field names, parameters in the where
    ' clause do not get created.

    Dim prmParam As DAO.Parameter

    On Error GoTo AssignParametersErr

    For Each prmParam In qyExec.Parameters
        Select Case prmParam.Name
            Case "[w_id]"
                prmParam.Value = WorkspaceId

            Case "[c_id]"
                prmParam.Value = ConnNameId

            Case "[c_name]"
                prmParam.Value = ConnName

            Case "[c_str]"
                prmParam.Value = ConnectionString

            Case "[c_type]"
                prmParam.Value = ConnType

            Case Else
                ' Write the parameter name that is
faulty
                WriteError errInvalidParameter,
mstrSource, prmParam.Name
                On Error GoTo 0
                Err.Raise errInvalidParameter,
mstrModuleName & "AssignParameters", _

LoadResString(errInvalidParameter)
        End Select
    Next prmParam

    Exit Sub
```


© 2006 Hewlett-Packard Company. All rights reserved.

```
AssignParametersErr:

    Call LogErrors(Errors)
    On Error GoTo 0
    Err.Raise vbObjectError +
errAssignParametersFailed, _
        mstrModuleName & "AssignParameters",
LoadResString(errAssignParametersFailed)

End Sub

Public Function Clone() As cConnDtl

    ' Creates a copy of a given Connection

    Dim cCloneConn As cConnDtl

    On Error GoTo CloneErr

    Set cCloneConn = New cConnDtl

    ' Copy all the Connection properties to the newly
created Connection
    cCloneConn.WorkspaceId = WorkspaceId
    cCloneConn.ConnNameId = ConnNameId
    cCloneConn.ConnName = ConnName
    cCloneConn.ConnectionString = ConnectionString
    cCloneConn.ConnType = ConnType
    cCloneConn.IndOperation = mintOperation
    cCloneConn.Position = Position

    ' And set the return value to the newly created
Connection
    Set Clone = cCloneConn
    Set cCloneConn = Nothing

    Exit Function

CloneErr:
    LogErrors Errors
    mstrSource = mstrModuleName & "Clone"
    On Error GoTo 0
    Err.Raise vbObjectError + errCloneFailed,
mstrSource, LoadResString(errCloneFailed)

End Function
Private Sub CheckDupConnectionName()
    ' Check if the Connection name already exists in
the workspace

    Dim rstConnection As Recordset
    Dim strSql As String
    Dim qy As DAO.QueryDef

    On Error GoTo CheckDupConnectionNameErr
    mstrSource = mstrModuleName &
"CheckDupConnectionName"

    ' Create a recordset object to retrieve the count
of all Connections
    ' for the workspace with the same name
    strSql = "Select count(*) as Connection_count " &
_
        " from " & TBL_CONNECTION_DTLS & _
        " where " & FLD_ID_WORKSPACE & " = [w_id]" &
_
        " and " & FLD_CONN_DTL_CONNECTION_NAME & " =
[c_name]" & _
        " and " & FLD_ID_CONN_NAME & " <> [c_id]"

    Set qy =
dbsAttTool.CreateQueryDef(gstrEmptyString, strSql)
    Call AssignParameters(qy)

    Set rstConnection =
qy.OpenRecordset(dbOpenForwardOnly)

    If rstConnection![Connection_count] > 0 Then
        rstConnection.Close
        qy.Close
        ShowError errDupConnDtlName
        On Error GoTo 0
        Err.Raise vbObjectError + errDupConnDtlName,
_
            mstrSource,
LoadResString(errDupConnDtlName)
    End If

    rstConnection.Close
    qy.Close

    Exit Sub

CheckDupConnectionNameErr:
    LogErrors Errors
    mstrSource = mstrModuleName &
"CheckDupConnectionName"
    On Error GoTo 0
    Err.Raise vbObjectError + errProgramError, _
        mstrSource, LoadResString(errProgramError)

End Sub
Public Property Let IndOperation(ByVal vdata As
Operation)

    ' The valid operations are define in the
cOperations
    ' class. Check if the operation is valid
    Select Case vdata
        Case QueryOp, InsertOp, UpdateOp, DeleteOp
            mintOperation = vdata

        Case Else
            BugAssert True
    End Select

End Property
Public Sub Validate()
    ' Each distinct object will have a Validate
method which
    ' will check if the class properties are valid.
This method
    ' will be used to check interdependant properties
that
    ' cannot be validated by the let procedures.
    ' It should be called by the add and modify
methods of the class

    If ConnName = gstrEmptyString Then

        ShowError errConnectionNameMandatory
        On Error GoTo 0
        ' Propogate this error back to the caller
        Err.Raise vbObjectError +
errConnectionNameMandatory, _
            mstrSource,
LoadResString(errConnectionNameMandatory)
    End If

    ' Raise an error if the Connection name already
exists in the workspace
    Call CheckDupConnectionName

End Sub
Public Sub Add()

    Dim strInsert As String
    Dim qy As DAO.QueryDef

    On Error GoTo AddErr

    ' Validate the record before trying to insert the
record
    Call Validate

    ' Create a temporary querydef object
    strInsert = "insert into " & TBL_CONNECTION_DTLS
& _
            "( " & FLD_ID_WORKSPACE & _
            ", " & FLD_ID_CONN_NAME & _
            ", " & FLD_CONN_DTL_CONNECTION_NAME & _
            ", " & FLD_CONN_DTL_CONNECTION_STRING &
_
            ", " & FLD_CONN_DTL_CONNECTION_TYPE & "
) " & _
           " values ( [w_id], [c_id], " & _
           " [c_name], [c_str], [c_type] ) "

    Set qy =
dbsAttTool.CreateQueryDef(gstrEmptyString, strInsert)

    ' Call a procedure to assign the Connection
values
    Call AssignParameters(qy)

    qy.Execute dbFailOnError
    qy.Close

    Exit Sub

AddErr:

    Call LogErrors(Errors)
    On Error GoTo 0
    Err.Raise vbObjectError + errInsertFailed, _
        mstrModuleName & "Add",
LoadResString(errInsertFailed)
```


© 2006 Hewlett-Packard Company. All rights reserved.

```
End Sub
Public Sub Delete()

    Dim strDelete As String
    Dim qy As DAO.QueryDef

    On Error GoTo DeleteErr

    strDelete = "delete from " & TBL_CONNECTION_DTLS
& _
            " where " & FLD_ID_CONN_NAME & " =
[c_id]"
    Set qy =
dbsAttTool.CreateQueryDef(gstrEmptyString, strDelete)

    Call AssignParameters(qy)
    qy.Execute dbFailOnError

    qy.Close

    Exit Sub

DeleteErr:
    LogErrors Errors
    On Error GoTo 0
    Err.Raise vbObjectError + errDeleteFailed, _
            mstrModuleName & "Delete",
LoadResString(errDeleteFailed)

End Sub

Public Sub Modify()

    Dim strUpdate As String
    Dim qy As QueryDef

    On Error GoTo ModifyErr

    ' Validate the updated values before trying to
modify the db
    Call Validate

    ' Create a temporary querydef object with the
modify string
    strUpdate = "update " & TBL_CONNECTION_DTLS & _
            " set " & FLD_ID_WORKSPACE & " = [w_id],
" & _
            FLD_CONN_DTL_CONNECTION_NAME & " =
[c_name], " & _
            FLD_CONN_DTL_CONNECTION_STRING & " =
[c_str], " & _
            FLD_CONN_DTL_CONNECTION_TYPE & " =
[c_type] " & _
            " where " & FLD_ID_CONN_NAME & " =
[c_id]"
    Set qy =
dbsAttTool.CreateQueryDef(gstrEmptyString, strUpdate)

    ' Call a procedure to assign the Connection
values to the
    ' querydef object
    Call AssignParameters(qy)
    qy.Execute dbFailOnError

    qy.Close

    Exit Sub

ModifyErr:

    Call LogErrors(Errors)
    On Error GoTo 0
    Err.Raise vbObjectError + errModifyFailed, _
        mstrModuleName & "Modify",
LoadResString(errModifyFailed)

End Sub
Public Property Get NextIdentifier() As Long

    Dim lngNextId As Long

    On Error GoTo NextIdentifierErr

    ' Retrieve the next identifier using the sequence
class
    Set mConnectionSeq = New cSequence
    Set mConnectionSeq.IdDatabase = dbsAttTool
    mConnectionSeq.IdentifierColumn =
FLD_ID_CONN_NAME
    lngNextId = mConnectionSeq.Identifier
    Set mConnectionSeq = Nothing

    NextIdentifier = lngNextId
    Exit Property

NextIdentifierErr:
    LogErrors Errors
    On Error GoTo 0
    Err.Raise vbObjectError + errIdGetFailed, _
        mstrModuleName & "NextIdentifier",
LoadResString(errIdGetFailed)

End Property
Public Property Get IndOperation() As Operation

    IndOperation = mintOperation

End Property

Private Sub Class_Initialize()

    Set mFieldValue = New cStringSM

    ' Initialize the operation indicator variable to
Query
    ' It will be modified later by the collection
class when
    ' inserts, updates or deletes are performed
    mintOperation = QueryOp

    ConnType = giDefaultConnType

End Sub

Private Sub Class_Terminate()

    Set mFieldValue = Nothing

End Sub
```

cConnDtls.cls

```
VERSION 1.0 CLASS
BEGIN
  MultiUse = -1  'True
END
Attribute VB_Name = "cConnDtls"
Attribute VB_GlobalNameSpace = False
Attribute VB_Creatable = True
Attribute VB_PredeclaredId = False
Attribute VB_Exposed = False
'  FILE:       cConnDtls.cls
'              Microsoft TPC-H Kit Ver. 1.00
'              Copyright Microsoft, 1999
'              All Rights Reserved
'
'
'  PURPOSE:    Implements an array of cConnDtl
objects.
'              Type-safe wrapper around
cNodeCollections.
'              Also contains additional functions to
determine the connection
'              string value, validation functions,
etc.
'  Contact:    Reshma Tharamal
(reshmat@microsoft.com)
'
Option Explicit

Private mcarrConnDtls As cNodeCollections

' Used to indicate the source module name when errors
' are raised by this class
Private mstrSource As String
Private Const mstrModuleName As String = "cConnDtls."

Public Property Set ConnDb(vdata As Database)

    Set mcarrConnDtls.NodeDB = vdata

End Property
Public Sub Modify(cModifiedConn As cConnDtl)

    ' First check if the parameter record is valid
    Call CheckDupConnName(cModifiedConn)

    Call mcarrConnDtls.Modify(cModifiedConn)

End Sub
Public Sub Load(ByRef cConnToAdd As cConnDtl)

    Call mcarrConnDtls.Load(cConnToAdd)

End Sub
Public Sub Add(ByRef cConnToAdd As cConnDtl)

    ' First check if the record is valid
```


© 2006 Hewlett-Packard Company. All rights reserved.

```
    Call Validate(cConnToAdd)

    ' Retrieve a unique identifier
    cConnToAdd.ConnNameId = cConnToAdd.NextIdentifier

    Call mcarrConnDtls.Add(cConnToAdd)

End Sub

Public Sub Unload(lConnNameId As Long)

    Dim lngDeleteElement As Long

    lngDeleteElement = QueryIndex(lConnNameId)

    Call mcarrConnDtls.Unload(lngDeleteElement)

End Sub

Public Sub SaveConnDtlsInWsp(ByVal lngWorkspace As
Long)
    ' Call a procedure to save all connection details
records for the workspace
    Call mcarrConnDtls.Save(lngWorkspace)

End Sub
Public Function GetConnectionDtl(ByVal lngWorkspace
As Long, _
        ByVal strConnectionName As String) As
cConnDtl
    ' Returns the connection dtl for the passed in
connection name

    Dim lngIndex As Long

    ' Find all parameters in the array with a
matching workspace id
    For lngIndex = 0 To mcarrConnDtls.Count - 1
        If mcarrConnDtls(lngIndex).WorkspaceId =
lngWorkspace And _
                mcarrConnDtls(lngIndex).ConnName =
strConnectionName Then

            Set GetConnectionDtl =
mcarrConnDtls(lngIndex)
            Exit For
        End If
    Next lngIndex

    If lngIndex > mcarrConnDtls.Count - 1 Then
        ' The parameter has not been defined for the
workspace
        ' Raise an error
        On Error GoTo 0
        Err.Raise vbObjectError + errConnNameInvalid,
mstrModuleName & "GetConnection", _
                LoadResString(errConnNameInvalid)
    End If

End Function
Public Sub Delete(lConnNameId As Long)
    ' Delete the passed in parameter

    Dim lngDeleteElement As Long

    lngDeleteElement = QueryIndex(lConnNameId)
    Call mcarrConnDtls.Delete(lngDeleteElement)

End Sub
Private Function QueryIndex(lConnNameId As Long) As
Long

    Dim lngIndex As Long

    ' Find the matching parameter record in the array
    For lngIndex = 0 To mcarrConnDtls.Count - 1
        If mcarrConnDtls(lngIndex).ConnNameId =
lConnNameId And _
                mcarrConnDtls(lngIndex).IndOperation
<> DeleteOp Then
            QueryIndex = lngIndex
            Exit Function
        End If
    Next lngIndex

    ' Raise error that parameter has not been found
    On Error GoTo 0
    Err.Raise vbObjectError + errQueryIndexFailed,
"cArrParameters.QueryIndex", _
        LoadResString(errQueryIndexFailed)

End Function

Public Function QueryConnDtl(lConnNameId As Long) As
cConnDtl

    Dim lngQueryElement As Long

    lngQueryElement = QueryIndex(lConnNameId)

    ' Return the queried connection object
    Set QueryConnDtl = mcarrConnDtls(lngQueryElement)

End Function
Public Property Get Count() As Long

    Count = mcarrConnDtls.Count

End Property
Public Property Get Item(lngIndex As Long) As
cConnDtl
Attribute Item.VB_UserMemId = 0

    Set Item = mcarrConnDtls(lngIndex)

End Property

Private Sub Validate(ByVal cConnToValidate As
cConnDtl)
    ' This procedure is necessary since the class
cannot validate
    ' all the connection_dtl properties on it's own.
This is 'coz we
    ' might have created new connections in the
workspace, but not
    ' saved them to the database yet - hence the
duplicate check
    ' has to be repeated in the array

    Dim lngIndex As Long
    Dim cTempParam As cConnDtl

    ' Check if the parameter name already exists in
the workspace
    For lngIndex = 0 To mcarrConnDtls.Count - 1
        Set cTempParam = mcarrConnDtls(lngIndex)
        If cTempParam.WorkspaceId =
cConnToValidate.WorkspaceId And _
                cTempParam.ConnName =
cConnToValidate.ConnName And _
                cTempParam.IndOperation <> DeleteOp
Then
            On Error GoTo 0
            Err.Raise vbObjectError +
errDupConnDtlName, _
                mstrSource,
LoadResString(errDupConnDtlName)
        End If
    Next lngIndex

End Sub
Private Sub CheckDupConnName(ByVal cConnToValidate As
cConnDtl)

    Dim lngIndex As Long
    Dim cTempParam As cConnDtl

    ' Check if the parameter name already exists in
the workspace
    For lngIndex = 0 To mcarrConnDtls.Count - 1
        Set cTempParam = mcarrConnDtls(lngIndex)
        If cTempParam.WorkspaceId =
cConnToValidate.WorkspaceId And _
                cTempParam.ConnName =
cConnToValidate.ConnName And _
                cTempParam.ConnNameId <>
cConnToValidate.ConnNameId And _
                cTempParam.IndOperation <> DeleteOp
Then
            ShowError errDupConnDtlName
            On Error GoTo 0
            Err.Raise vbObjectError +
errDupConnDtlName, _
                mstrSource,
LoadResString(errDupConnDtlName)
        End If
    Next lngIndex

End Sub

Private Sub Class_Initialize()

    Set mcarrConnDtls = New cNodeCollections

End Sub

Private Sub Class_Terminate()
```


© 2006 Hewlett-Packard Company. All rights reserved.

```
    Set mcarrConnDtls = Nothing

End Sub
```

cConnection.cls

```
VERSION 1.0 CLASS
BEGIN
  MultiUse = -1  'True
END
Attribute VB_Name = "cConnection"
Attribute VB_GlobalNameSpace = False
Attribute VB_Creatable = True
Attribute VB_PredeclaredId = False
Attribute VB_Exposed = False
'  FILE:        cConnection.cls
'               Microsoft TPC-H Kit Ver. 1.00
'               Copyright Microsoft, 1999
'               All Rights Reserved
'
'
'  PURPOSE:     Encapsulates the properties and
methods of a connection string.
'               Contains functions to insert, update
and delete
'               workspace_connections records from
the database.
'  Contact:     Reshma Tharamal
(reshmat@microsoft.com)
'
Option Explicit
Option Base 0

' Local variable(s) to hold property value(s)
Public WorkspaceId As Long
Public ConnectionId As Long
Public ConnectionValue As String
Public Description As String
Public NodeDB As Database
Public Position As Long
Public NoCountDisplay As Boolean
Public NoExecute As Boolean
Public ParseQueryOnly As Boolean
Public QuotedIdentifiers As Boolean
Public AnsiNulls As Boolean
Public ShowQueryPlan As Boolean
Public ShowStatsTime As Boolean
Public ShowStatsIO As Boolean
Public ParseOdbcMsg As Boolean
Public RowCount As Long
Public TsqlBatchSeparator As String
Public QueryTimeOut As Long
Public ServerLanguage As String
Public CharacterTranslation As Boolean
Public RegionalSettings As Boolean

Private mstrConnectionName As String
Private mintOperation As Operation

' Used to indicate the source module name when errors
' are raised by this class
Private mstrSource As String
Private Const mstrModuleName As String =
"cConnection."

' The cSequence class is used to generate unique
Connection identifiers
Private mConnectionSeq As cSequence

' The StringSM class is used to carry out string
operations
Private mFieldValue As cStringSM

Private Sub AssignParameters(qyExec As DAO.QueryDef)
    ' Assigns values to the parameters in the
querydef object
    ' The parameter names are cryptic to
differentiate them from the field names.
    ' When the parameter names are the same as the
field names, parameters in the where
    ' clause do not get created.

    Dim prmParam As DAO.Parameter

    On Error GoTo AssignParametersErr

    For Each prmParam In qyExec.Parameters
        Select Case prmParam.Name
            Case "[w_id]"
                prmParam.Value = WorkspaceId

            Case "[c_id]"
                prmParam.Value = ConnectionId

            Case "[c_name]"
                prmParam.Value = mstrConnectionName

            Case "[c_value]"
                prmParam.Value = ConnectionValue

            Case "[desc]"
                prmParam.Value = Description

            Case "[no_count]"
                prmParam.Value = NoCountDisplay

            Case "[no_exec]"
                prmParam.Value = NoExecute

            Case "[parse_only]"
                prmParam.Value = ParseQueryOnly

            Case "[quoted_id]"
                prmParam.Value = QuotedIdentifiers

            Case "[a_nulls]"
                prmParam.Value = AnsiNulls

            Case "[show_qp]"
                prmParam.Value = ShowQueryPlan

            Case "[stats_tm]"
                prmParam.Value = ShowStatsTime

            Case "[stats_io]"
                prmParam.Value = ShowStatsIO

            Case "[parse_odbc]"
                prmParam.Value = ParseOdbcMsg

            Case "[row_cnt]"
                prmParam.Value = RowCount

            Case "[batch_sep]"
                prmParam.Value = TsqlBatchSeparator

            Case "[qry_tmout]"
                prmParam.Value = QueryTimeOut

            Case "[lang]"
                prmParam.Value = ServerLanguage

            Case "[char_trans]"
                prmParam.Value = CharacterTranslation

            Case "[reg_settings]"
                prmParam.Value = RegionalSettings

            Case Else
                ' Write the parameter name that is
faulty
                WriteError errInvalidParameter,
mstrSource, prmParam.Name
                On Error GoTo 0
                Err.Raise errInvalidParameter,
mstrModuleName & "AssignParameters", _

LoadResString(errInvalidParameter)
        End Select
    Next prmParam

    Exit Sub

AssignParametersErr:

    Call LogErrors(Errors)
    On Error GoTo 0
    Err.Raise vbObjectError +
errAssignParametersFailed, _
        mstrModuleName & "AssignParameters",
LoadResString(errAssignParametersFailed)

End Sub

Public Function Clone() As cConnection

    ' Creates a copy of a given Connection

    Dim cCloneConn As cConnection

    On Error GoTo CloneErr

    Set cCloneConn = New cConnection

    ' Copy all the Connection properties to the newly
```


© 2006 Hewlett-Packard Company. All rights reserved.

```
    ' created Connection
    Set cCloneConn.NodeDB = NodeDB
    cCloneConn.WorkspaceId = WorkspaceId
    cCloneConn.ConnectionId = ConnectionId
    cCloneConn.ConnectionName = mstrConnectionName
    cCloneConn.ConnectionValue = ConnectionValue
    cCloneConn.Description = Description
    cCloneConn.IndOperation = mintOperation
    cCloneConn.Position = Position
    cCloneConn.NoCountDisplay = NoCountDisplay
    cCloneConn.NoExecute = NoExecute
    cCloneConn.ParseQueryOnly = ParseQueryOnly
    cCloneConn.QuotedIdentifiers = QuotedIdentifiers
    cCloneConn.AnsiNulls = AnsiNulls
    cCloneConn.ShowQueryPlan = ShowQueryPlan
    cCloneConn.ShowStatsTime = ShowStatsTime
    cCloneConn.ShowStatsIO = ShowStatsIO
    cCloneConn.ParseOdbcMsg = ParseOdbcMsg
    cCloneConn.RowCount = RowCount
    cCloneConn.TsqlBatchSeparator =
TsqlBatchSeparator
    cCloneConn.QueryTimeOut = QueryTimeOut
    cCloneConn.ServerLanguage = ServerLanguage
    cCloneConn.CharacterTranslation =
CharacterTranslation
    cCloneConn.RegionalSettings = RegionalSettings

    ' And set the return value to the newly created
Connection
    Set Clone = cCloneConn
    Set cCloneConn = Nothing

    Exit Function

CloneErr:
    LogErrors Errors
    mstrSource = mstrModuleName & "Clone"
    On Error GoTo 0
    Err.Raise vbObjectError + errCloneFailed,
mstrSource, LoadResString(errCloneFailed)

End Function
Private Sub CheckDupConnectionName()
    ' Check if the Connection name already exists in
the workspace

    Dim rstConnection As Recordset
    Dim strSql As String
    Dim qy As DAO.QueryDef

    On Error GoTo CheckDupConnectionNameErr
    mstrSource = mstrModuleName &
"CheckDupConnectionName"

    ' Create a recordset object to retrieve the count
of all Connections
    ' for the workspace with the same name
    strSql = "Select count(*) as Connection_count " &
_
        " from workspace_connections " & _
        " where workspace_id = [w_id]" & _
        " and connection_name = [c_name]" & _
        " and connection_id <> [c_id]"

    Set qy = NodeDB.CreateQueryDef(gstrEmptyString,
strSql)
    Call AssignParameters(qy)

    Set rstConnection =
qy.OpenRecordset(dbOpenForwardOnly)

    If rstConnection![Connection_count] > 0 Then
        rstConnection.Close
        qy.Close
        ShowError errDuplicateConnectionName
        On Error GoTo 0
        Err.Raise vbObjectError +
errDuplicateConnectionName, _
            mstrSource,
LoadResString(errDuplicateConnectionName)
    End If

    rstConnection.Close
    qy.Close

    Exit Sub

CheckDupConnectionNameErr:
    LogErrors Errors
    mstrSource = mstrModuleName &
"CheckDupConnectionName"
    On Error GoTo 0
    Err.Raise vbObjectError + errProgramError, _
        mstrSource, LoadResString(errProgramError)

End Sub
Private Sub CheckDB()
    ' Check if the database object has been
initialized

    If NodeDB Is Nothing Then
        On Error GoTo 0
        Err.Raise vbObjectError + errInvalidDB, _
            mstrModuleName & "CheckDB",
LoadResString(errInvalidDB)
    End If

End Sub
Public Property Let ConnectionName(vdata As String)

    If vdata = gstrEmptyString Then

        ShowError errConnectionNameMandatory
        On Error GoTo 0
        ' Propogate this error back to the caller
        Err.Raise vbObjectError +
errConnectionNameMandatory, _
            mstrSource,
LoadResString(errConnectionNameMandatory)
    Else
        mstrConnectionName = vdata
    End If

End Property

Public Property Let IndOperation(ByVal vdata As
Operation)

    ' The valid operations are define in the
cOperations
    ' class. Check if the operation is valid
    Select Case vdata
        Case QueryOp, InsertOp, UpdateOp, DeleteOp
            mintOperation = vdata

        Case Else
            BugAssert True
    End Select

End Property
Public Sub Validate()
    ' Each distinct object will have a Validate
method which
    ' will check if the class properties are valid.
This method
    ' will be used to check interdependant properties
that
    ' cannot be validated by the let procedures.
    ' It should be called by the add and modify
methods of the class

    ' Check if the db object is valid
    Call CheckDB

    ' Raise an error if the Connection name already
exists in the workspace
    Call CheckDupConnectionName

End Sub
Public Sub Add()

    Dim strInsert As String
    Dim qy As DAO.QueryDef

    On Error GoTo AddErr

    ' Validate the record before trying to insert the
record
    Call Validate

    ' Create a temporary querydef object
    strInsert = "insert into workspace_connections "
& _
            "( workspace_id, connection_id, " & _
            "connection_name, connection_value, " &
_
            "description, no_count_display, " & _
            "no_execute, parse_query_only, " & _
            "ANSI_quoted_identifiers, ANSI_nulls, "
& _
            "show_query_plan, show_stats_time, " & _
            "show_stats_io, parse_odbc_msg_prefixes,
" & _
            "row_count, tsql_batch_separator, " & _
            "query_time_out, server_language, " & _
            "character_translation,
regional_settings ) " & _
```


© 2006 Hewlett-Packard Company. All rights reserved.

```
            " values ( [w_id], [c_id], [c_name],
[c_value], " & _
            " [desc], [no_count], [no_exec],
[parse_only], " & _
            " [quoted_id], [a_nulls], [show_qp],
[stats_tm], " & _
            " [stats_io], [parse_odbc], [row_cnt],
[batch_sep], " & _
            " [qry_tmout], [lang], [char_trans],
[reg_settings] ) "

    Set qy = NodeDB.CreateQueryDef(gstrEmptyString,
strInsert)

    ' Call a procedure to assign the Connection
values
    Call AssignParameters(qy)

    qy.Execute dbFailOnError
    qy.Close

    Exit Sub

AddErr:

    Call LogErrors(Errors)
    On Error GoTo 0
    Err.Raise vbObjectError + errInsertFailed, _
        mstrModuleName & "Add",
LoadResString(errInsertFailed)

End Sub
Public Sub Delete()

    Dim strDelete As String
    Dim qy As DAO.QueryDef

    On Error GoTo DeleteErr

    ' Check if the db object is valid
    Call CheckDB

    strDelete = "delete from workspace_connections "
& _
            " where connection_id = [c_id]"
    Set qy = NodeDB.CreateQueryDef(gstrEmptyString,
strDelete)

    Call AssignParameters(qy)
    qy.Execute dbFailOnError

    qy.Close

    Exit Sub

DeleteErr:
    LogErrors Errors
    On Error GoTo 0
    Err.Raise vbObjectError + errDeleteFailed, _
            mstrModuleName & "Delete",
LoadResString(errDeleteFailed)

End Sub

Public Sub Modify()

    Dim strUpdate As String
    Dim qy As QueryDef

    On Error GoTo ModifyErr

    ' Validate the updated values before trying to
modify the db
    Call Validate

    ' Create a temporary querydef object with the
modify string
    strUpdate = "update workspace_connections " & _
            " set workspace_id = [w_id], " & _
            "connection_name = [c_name], " & _
            "connection_value = [c_value], " & _
            "description = [desc], " & _
            "no_count_display = [no_count], " & _
            "no_execute = [no_exec], " & _
            "parse_query_only = [parse_only], " & _
            "ANSI_quoted_identifiers = [quoted_id], "
& _
            "ANSI_nulls = [a_nulls], " & _
            "show_query_plan = [show_qp], " & _
            "show_stats_time = [stats_tm], " & _
            "show_stats_io = [stats_io], " & _
            "parse_odbc_msg_prefixes = [parse_odbc],
" & _
            "row_count = [row_cnt], " & _
            "tsql_batch_separator = [batch_sep], " &
_
            "query_time_out = [qry_tmout], " & _
            "server_language = [lang], " & _
            "character_translation = [char_trans], "
& _
            "regional_settings = [reg_settings] " & _
            " where connection_id = [c_id]"
    Set qy = NodeDB.CreateQueryDef(gstrEmptyString,
strUpdate)

    ' Call a procedure to assign the Connection
values to the
    ' querydef object
    Call AssignParameters(qy)
    qy.Execute dbFailOnError

    qy.Close

    Exit Sub

ModifyErr:

    Call LogErrors(Errors)
    On Error GoTo 0
    Err.Raise vbObjectError + errModifyFailed, _
        mstrModuleName & "Modify",
LoadResString(errModifyFailed)

End Sub
Public Property Get ConnectionName() As String

    ConnectionName = mstrConnectionName

End Property

Public Property Get NextIdentifier() As Long

    Dim lngNextId As Long

    On Error GoTo NextIdentifierErr

    ' First check if the database object is valid
    Call CheckDB

    ' Retrieve the next identifier using the sequence
class
    Set mConnectionSeq = New cSequence
    Set mConnectionSeq.IdDatabase = NodeDB
    mConnectionSeq.IdentifierColumn = "connection_id"
    lngNextId = mConnectionSeq.Identifier
    Set mConnectionSeq = Nothing

    NextIdentifier = lngNextId
    Exit Property

NextIdentifierErr:
    LogErrors Errors
    On Error GoTo 0
    Err.Raise vbObjectError + errIdGetFailed, _
        mstrModuleName & "NextIdentifier",
LoadResString(errIdGetFailed)

End Property
Public Property Get IndOperation() As Operation

    IndOperation = mintOperation

End Property

Private Sub Class_Initialize()

    Set mFieldValue = New cStringSM

    ' Initialize the operation indicator variable to
Query
    ' It will be modified later by the collection
class when
    ' inserts, updates or deletes are performed
    mintOperation = QueryOp

    ' Initialize connection properties to their
default values
    NoCountDisplay = DEF_NO_COUNT_DISPLAY
    NoExecute = DEF_NO_EXECUTE
    ParseQueryOnly = DEF_PARSE_QUERY_ONLY
    QuotedIdentifiers = DEF_ANSI_QUOTED_IDENTIFIERS
    AnsiNulls = DEF_ANSI_NULLS
    ShowQueryPlan = DEF_SHOW_QUERY_PLAN
    ShowStatsTime = DEF_SHOW_STATS_TIME
    ShowStatsIO = DEF_SHOW_STATS_IO
    ParseOdbcMsg = DEF_PARSE_ODBC_MSG_PREFIXES
    RowCount = DEF_ROW_COUNT
    TsqlBatchSeparator = DEF_TSQL_BATCH_SEPARATOR
    QueryTimeOut = DEF_QUERY_TIME_OUT
```


© 2006 Hewlett-Packard Company. All rights reserved.

```
    ServerLanguage = DEF_SERVER_LANGUAGE
    CharacterTranslation = DEF_CHARACTER_TRANSLATION
    RegionalSettings = DEF_REGIONAL_SETTINGS

End Sub

Private Sub Class_Terminate()

    Set NodeDB = Nothing
    Set mFieldValue = Nothing

End Sub
```

cConnections.cls

```
VERSION 1.0 CLASS
BEGIN
  MultiUse = -1  'True
END
Attribute VB_Name = "cConnections"
Attribute VB_GlobalNameSpace = False
Attribute VB_Creatable = True
Attribute VB_PredeclaredId = False
Attribute VB_Exposed = False
'  FILE:       cConnections.cls
'              Microsoft TPC-H Kit Ver. 1.00
'              Copyright Microsoft, 1999
'              All Rights Reserved
'
'
'  PURPOSE:    Implements an array of cConnection
objects.
'              Type-safe wrapper around
cNodeCollections.
'              Also contains validation functions,
etc.
'  Contact:    Reshma Tharamal
(reshmat@microsoft.com)
'
Option Explicit

Private mcarrConnections As cNodeCollections

' Used to indicate the source module name when errors
' are raised by this class
Private mstrSource As String
Private Const mstrModuleName As String =
"cConnections."

Public Property Set ConnDb(vdata As Database)

    Set mcarrConnections.NodeDB = vdata

End Property
Public Sub Modify(cModifiedConn As cConnection)

    ' First check if the parameter record is valid
    Call CheckDupConnName(cModifiedConn)

    Call mcarrConnections.Modify(cModifiedConn)

End Sub
Public Sub Load(ByRef cConnToAdd As cConnection)

    Call mcarrConnections.Load(cConnToAdd)

End Sub
Public Sub Add(ByRef cConnToAdd As cConnection)

    Set cConnToAdd.NodeDB = mcarrConnections.NodeDB

    ' First check if the record is valid
    Call Validate(cConnToAdd)

    ' Retrieve a unique identifier
    cConnToAdd.ConnectionId =
cConnToAdd.NextIdentifier

    Call mcarrConnections.Add(cConnToAdd)

End Sub

Public Sub Unload(lngConnId As Long)

    Dim lngDeleteElement As Long

    lngDeleteElement = QueryIndex(lngConnId)

    Call mcarrConnections.Unload(lngDeleteElement)

End Sub

Public Sub SaveConnectionsInWsp(ByVal lngWorkspace As
Long)
    ' Call a procedure to save all connection records
for the workspace
    Call mcarrConnections.Save(lngWorkspace)

End Sub
Public Function GetConnection(ByVal lngWorkspace As
Long, _
        ByVal strConnectionName As String) As
cConnection
    ' Returns the connection string for the passed in
connection name

    Dim lngIndex As Long

    ' Find all parameters in the array with a
matching workspace id
    For lngIndex = 0 To mcarrConnections.Count - 1
        If mcarrConnections(lngIndex).WorkspaceId =
lngWorkspace And _

mcarrConnections(lngIndex).ConnectionName =
strConnectionName Then

            Set GetConnection =
mcarrConnections(lngIndex)
            Exit For
        End If
    Next lngIndex

    If lngIndex > mcarrConnections.Count - 1 Then
        ' The parameter has not been defined for the
workspace
        ' Raise an error
        On Error GoTo 0
        Err.Raise vbObjectError + errConnNameInvalid,
mstrModuleName & "GetConnection", _
                LoadResString(errConnNameInvalid)
    End If

End Function
Public Sub Delete(lngConnId As Long)
    ' Delete the passed in parameter

    Dim lngDeleteElement As Long

    lngDeleteElement = QueryIndex(lngConnId)
    Call mcarrConnections.Delete(lngDeleteElement)

End Sub
Private Function QueryIndex(lngConnId As Long) As
Long

    Dim lngIndex As Long

    ' Find the matching parameter record in the array
    For lngIndex = 0 To mcarrConnections.Count - 1
        If mcarrConnections(lngIndex).ConnectionId =
lngConnId And _

mcarrConnections(lngIndex).IndOperation <> DeleteOp
Then
            QueryIndex = lngIndex
            Exit Function
        End If
    Next lngIndex

    ' Raise error that parameter has not been found
    On Error GoTo 0
    Err.Raise vbObjectError + errQueryIndexFailed,
"cArrParameters.QueryIndex", _
        LoadResString(errQueryIndexFailed)

End Function

Public Function QueryConnection(lngConnId As Long) As
cConnection

    Dim lngQueryElement As Long

    lngQueryElement = QueryIndex(lngConnId)

    ' Return the queried connection object
    Set QueryConnection =
mcarrConnections(lngQueryElement)

End Function
Public Property Get Count() As Long

    Count = mcarrConnections.Count

End Property
```


© 2006 Hewlett-Packard Company. All rights reserved.

```
Public Property Get Item(lngIndex As Long) As
cConnection
Attribute Item.VB_UserMemId = 0

    Set Item = mcarrConnections(lngIndex)

End Property

Public Sub Validate(ByVal cConnToValidate As
cConnection)
    ' This procedure is necessary since the class
cannot validate
    ' all the parameter properties on it's own. This
is 'coz we
    ' might have created new parameters in the
workspace, but not
    ' saved them to the database yet - hence the
duplicate check
    ' has to be repeated in the array

    Dim lngIndex As Long
    Dim cTempParam As cConnection

    ' Check if the parameter name already exists in
the workspace
    For lngIndex = 0 To mcarrConnections.Count - 1
        Set cTempParam = mcarrConnections(lngIndex)
        If cTempParam.WorkspaceId =
cConnToValidate.WorkspaceId And _
                cTempParam.ConnectionName =
cConnToValidate.ConnectionName And _
                cTempParam.IndOperation <> DeleteOp
Then
            On Error GoTo 0
            Err.Raise vbObjectError +
errDuplicateConnectionName, _
                mstrSource,
LoadResString(errDuplicateConnectionName)
        End If
    Next lngIndex

End Sub
Public Sub CheckDupConnName(ByVal cConnToValidate As
cConnection)

    Dim lngIndex As Long
    Dim cTempParam As cConnection

    ' Check if the parameter name already exists in
the workspace
    For lngIndex = 0 To mcarrConnections.Count - 1
        Set cTempParam = mcarrConnections(lngIndex)
        If cTempParam.WorkspaceId =
cConnToValidate.WorkspaceId And _
                cTempParam.ConnectionName =
cConnToValidate.ConnectionName And _
                cTempParam.ConnectionId <>
cConnToValidate.ConnectionId And _
                cTempParam.IndOperation <> DeleteOp
Then
            ShowError errDuplicateConnectionName
            On Error GoTo 0
            Err.Raise vbObjectError +
errDuplicateConnectionName, _
                mstrSource,
LoadResString(errDuplicateConnectionName)
        End If
    Next lngIndex

End Sub

Private Sub Class_Initialize()

    Set mcarrConnections = New cNodeCollections

End Sub

Private Sub Class_Terminate()

    Set mcarrConnections = Nothing

End Sub
```

cConstraint.cls

```
VERSION 1.0 CLASS
BEGIN
  MultiUse = -1  'True
END
Attribute VB_Name = "cConstraint"
Attribute VB_GlobalNameSpace = False
Attribute VB_Creatable = True
Attribute VB_PredeclaredId = False
Attribute VB_Exposed = False
'  FILE:        cConstraint.cls
'               Microsoft TPC-H Kit Ver. 1.00
'               Copyright Microsoft, 1999
'               All Rights Reserved
'
'
'  PURPOSE:     Encapsulates the properties and
methods of a constraint.
'               Contains functions to insert, update
and delete
'               step_constraints records from the
database.
'  Contact:     Reshma Tharamal
(reshmat@microsoft.com)
'
Option Explicit

' Module level variables to store the property values
Private mlngConstraintId As Long
Private mlngStepId As Long
Private mstrVersionNo As String
Private mintConstraintType As Integer
Private mlngGlobalStepId As Long
Private mstrGlobalVersionNo As String
Private mintSequenceNo As Integer
Private mdbsConstraintDB As Database
Private mlngWorkspaceId As Integer
Private mintOperation As Operation
Private mlngPosition As Long
' The cSequence class is used to generate unique step
identifiers
Private mConstraintSeq As cSequence

Private Const mstrModuleName As String =
".cConstraint."
Private mstrSource As String

Public Enum ConstraintType
    gintPreStep = 1
    gintPostStep = 2
End Enum

Private Const mstrSQ As String = "'"
Public Property Get WorkspaceId() As Long
    WorkspaceId = mlngWorkspaceId
End Property
Public Property Let WorkspaceId(ByVal vdata As Long)
    mlngWorkspaceId = vdata
End Property

Public Property Get IndOperation() As Operation

    IndOperation = mintOperation

End Property
Public Property Let IndOperation(ByVal vdata As
Operation)

    On Error GoTo IndOperationErr
    mstrSource = mstrModuleName & "IndOperation"

    ' The valid operations are define in the
cOperations
    ' class. Check if the operation is valid
    Select Case vdata
        Case QueryOp, InsertOp, UpdateOp, DeleteOp
            mintOperation = vdata

        Case Else
            On Error GoTo 0
            Err.Raise vbObjectError +
errInvalidOperation, _
                mstrSource,
LoadResString(errInvalidOperation)
    End Select

    Exit Property

IndOperationErr:
    LogErrors Errors
    mstrSource = mstrModuleName & "IndOperation"
    On Error GoTo 0
    Err.Raise vbObjectError + errLetOperationFailed,
_
        mstrSource,
LoadResString(errLetOperationFailed)

End Property

Public Function Clone() As cConstraint

    ' Creates a copy of a given constraint
```


© 2006 Hewlett-Packard Company. All rights reserved.

```
    Dim cConsClone As cConstraint

    On Error GoTo CloneErr
    mstrSource = mstrModuleName & "Clone"

    Set cConsClone = New cConstraint

    ' Copy all the workspace properties to the newly
    ' created workspace
    cConsClone.ConstraintId = mlngConstraintId
    cConsClone.StepId = mlngStepId
    cConsClone.VersionNo = mstrVersionNo
    cConsClone.ConstraintType = mintConstraintType
    cConsClone.GlobalStepId = mlngGlobalStepId
    cConsClone.GlobalVersionNo = mstrGlobalVersionNo
    cConsClone.SequenceNo = mintSequenceNo
    cConsClone.WorkspaceId = mlngWorkspaceId
    cConsClone.IndOperation = mintOperation

    ' And set the return value to the newly created
constraint
    Set Clone = cConsClone

    Exit Function

CloneErr:
    LogErrors Errors
    mstrSource = mstrModuleName & "Clone"
    On Error GoTo 0
    Err.Raise vbObjectError + errCloneFailed, _
            mstrSource, LoadResString(errCloneFailed)

End Function

Public Property Get SequenceNo() As Integer

    SequenceNo = mintSequenceNo

End Property

Public Property Let SequenceNo(ByVal vdata As
Integer)
    mintSequenceNo = vdata
End Property

Public Sub Add()
    ' Inserts a new step constraint into the database

    Dim strInsert As String
    Dim qy As DAO.QueryDef

    On Error GoTo AddErr

    ' First check if the database object is valid
    Call CheckDB

    ' Any record validations
    Call Validate

    ' Create a temporary querydef object
    strInsert = "insert into step_constraints " & _
            "( constraint_id, step_id, version_no, "
& _
            " constraint_type, global_step_id,
global_version_no, sequence_no ) " & _
            " values ( [cons_id], [s_id], [ver_no], "
& _
            " [cons_type], [g_step_id], [g_ver_no], "
& _
            " [seq_no] )"
    Set qy =
mdbsConstraintDB.CreateQueryDef(gstrEmptyString,
strInsert)

    ' Call a procedure to execute the Querydef object
    Call AssignParameters(qy)

    qy.Execute dbFailOnError
    qy.Close

'    strInsert = "insert into step_constraints " & _
'        "( constraint_id, step_id, version_no, " & _
'        " constraint_type, global_step_id,
global_version_no, sequence_no ) " & _
'        " values ( " & _
'        Str(mlngConstraintId) & ", " &
Str(mlngStepId) & ", " & _
'        mstrSQ & mstrVersionNo & mstrSQ & ", " &
Str(mintConstraintType) & ", " & _
'        Str(mlngGlobalStepId) & ", " & mstrSQ &
mstrGlobalVersionNo & mstrSQ & ", " & _
'        Str(mintSequenceNo) & " ) "
'
'    BugMessage strInsert
'    mdbsConstraintDB.Execute strInsert,
dbFailOnError
    Exit Sub

AddErr:
    LogErrors Errors
    mstrSource = mstrModuleName & "Add"
    On Error GoTo 0
    Err.Raise vbObjectError + errAddConstraintFailed,
_
            mstrSource, _
            LoadResString(errAddConstraintFailed)
End Sub
Private Sub AssignParameters(qyExec As DAO.QueryDef)
    ' Assigns values to the parameters in the
querydef object
    ' The parameter names are cryptic to make them
different
    ' from the field names. When the parameter names
are
    ' the same as the field names, parameters in the
where
    ' clause do not get created.

    Dim prmParam As DAO.Parameter

    On Error GoTo AssignParametersErr
    mstrSource = mstrModuleName & "AssignParameters"

    For Each prmParam In qyExec.Parameters

        Select Case prmParam.Name
            Case "[cons_id]"
                prmParam.Value = mlngConstraintId

            Case "[s_id]"
                prmParam.Value = mlngStepId

            Case "[ver_no]"
                prmParam.Value = mstrVersionNo

            Case "[cons_type]"
                prmParam.Value = mintConstraintType

            Case "[g_step_id]"
                prmParam.Value = mlngGlobalStepId

            Case "[g_ver_no]"
                prmParam.Value = mstrGlobalVersionNo

            Case "[seq_no]"
                prmParam.Value = mintSequenceNo

            Case Else
                ' Write the parameter name that is
faulty
                WriteError errInvalidParameter,
mstrSource, _
                        prmParam.Name
                On Error GoTo 0
                Err.Raise errInvalidParameter,
mstrSource, _

LoadResString(errInvalidParameter)
        End Select
    Next prmParam

    Exit Sub

AssignParametersErr:

    mstrSource = mstrModuleName & "AssignParameters"
    Call LogErrors(Errors)
    On Error GoTo 0
    Err.Raise vbObjectError +
errAssignParametersFailed, _
        mstrSource,
LoadResString(errAssignParametersFailed)

End Sub
Public Property Get NextIdentifier() As Long

    Dim lngNextId As Long

    On Error GoTo NextIdentifierErr

    ' First check if the database object is valid
    Call CheckDB

    ' Retrieve the next constraint identifier using
the
    ' sequence class
    Set mConstraintSeq = New cSequence
    Set mConstraintSeq.IdDatabase = mdbsConstraintDB
```


© 2006 Hewlett-Packard Company. All rights reserved.

```
    mConstraintSeq.IdentifierColumn = "constraint_id"
    lngNextId = mConstraintSeq.Identifier
    Set mConstraintSeq = Nothing

    NextIdentifier = lngNextId
    Exit Property

NextIdentifierErr:
    LogErrors Errors
    mstrSource = mstrModuleName & "NextIdentifier"
    On Error GoTo 0
    Err.Raise vbObjectError + errStepIdGetFailed, _
        mstrSource, LoadResString(errStepIdGetFailed)

End Property

Private Sub CheckDB()
    ' Check if the database object has been
initialized

    If mdbsConstraintDB Is Nothing Then
        ShowError errInvalidDB
        On Error GoTo 0
        Err.Raise vbObjectError + errInvalidDB, _
            mstrModuleName,
LoadResString(errInvalidDB)
    End If

End Sub

Public Sub Delete()
    ' Deletes the step constraint record from the
database

    Dim strDelete As String
    Dim qy As DAO.QueryDef

    On Error GoTo DeleteErr
    mstrSource = mstrModuleName & "Delete"

    ' There can be multiple constraints for a step,
    ' meaning that there can be multiple constraint
records
    ' with the same constraint_id. Only a combination
    ' of the step_id, version and constraint_id will
be
    ' unique
    strDelete = "delete from step_constraints " & _
            " where constraint_id = [cons_id]" & _
            " and step_id = [s_id] " & _
            " and version_no = [ver_no] "
    Set qy =
mdbsConstraintDB.CreateQueryDef(gstrEmptyString,
strDelete)

    Call AssignParameters(qy)
    qy.Execute dbFailOnError

    qy.Close

'    strDelete = "Delete from step_constraints " & _
'            " where constraint_id = " &
Str(mlngConstraintId) & _
'            " and step_id = " & Str(mlngStepId) & _
'            " and version_no = " & mstrSQ &
mstrVersionNo & mstrSQ
'
'    'BugMessage strDelete
'    mdbsConstraintDB.Execute strDelete,
dbFailOnError

    Exit Sub

DeleteErr:
    LogErrors Errors
    mstrSource = mstrModuleName & "Delete"
    On Error GoTo 0
    Err.Raise vbObjectError +
errDeleteConstraintFailed, _
            mstrSource, _
            LoadResString(errDeleteConstraintFailed)
End Sub
Public Sub Modify()
    ' Updates the sequence no of the step constraint
record
    ' in the database

    Dim strUpdate As String
    Dim qy As QueryDef

    On Error GoTo Modify

    ' First check if the database object is valid
    Call CheckDB

    ' Any record validations
    Call Validate

    ' There can be multiple constraints for a step,
    ' meaning that there can be multiple constraint
records
    ' with the same constraint_id. Only a combination
    ' of the step_id, version and constraint_id will
be
    ' unique
    ' Create a temporary querydef object with the
modify string
    strUpdate = "Update step_constraints " & _
            " set sequence_no = [seq_no] " & _
            " where constraint_id = [cons_id] " & _
            " and step_id = [s_id] " & _
            " and version_no = [ver_no] "
    Set qy =
mdbsConstraintDB.CreateQueryDef(gstrEmptyString,
strUpdate)

    ' Call a procedure to assign the parameter values
to the
    ' querydef object
    Call AssignParameters(qy)
    qy.Execute dbFailOnError

    qy.Close

'    strUpdate = "Update step_constraints " & _
'            " set sequence_no = " &
Str(mintSequenceNo) & _
'            " where constraint_id = " &
Str(mlngConstraintId) & _
'            " and step_id = " & Str(mlngStepId) & _
'            " and version_no = " & mstrSQ &
mstrVersionNo & mstrSQ
'
'    'BugMessage strUpdate
'    mdbsConstraintDB.Execute strUpdate,
dbFailOnError
    Exit Sub

Modify:
    LogErrors Errors
    mstrSource = mstrModuleName & "Modify"
    On Error GoTo 0
    Err.Raise vbObjectError +
errUpdateConstraintFailed, _
            mstrSource, _
            LoadResString(errUpdateConstraintFailed)
End Sub
Public Property Get Position() As Long

    Position = mlngPosition

End Property
Public Property Let Position(ByVal RHS As Long)

    mlngPosition = RHS

End Property

Public Sub Validate()
    ' Each distinct object will have a Validate
method which
    ' will check if the class properties are valid.
This method
    ' will be used to check interdependant properties
that
    ' cannot be validated by the let procedures.
    ' It should be called by the add and modify
methods of the class

    ' No validations are necessary for the constraint
object

End Sub

Public Property Set NodeDB(vdata As Database)

    Set mdbsConstraintDB = vdata

End Property

Public Property Get NodeDB() As Database

    Set NodeDB = mdbsConstraintDB

End Property

Public Property Get GlobalVersionNo() As String
```


© 2006 Hewlett-Packard Company. All rights reserved.

```
    GlobalVersionNo = mstrGlobalVersionNo

End Property

Public Property Let GlobalVersionNo(ByVal vdata As
String)

    mstrGlobalVersionNo = vdata

End Property

Public Property Get GlobalStepId() As Long

    GlobalStepId = mlngGlobalStepId

End Property

Public Property Get ConstraintId() As Long

    ConstraintId = mlngConstraintId

End Property

Public Property Get VersionNo() As String

    VersionNo = mstrVersionNo

End Property

Public Property Get StepId() As Long

    StepId = mlngStepId

End Property

Public Property Let VersionNo(ByVal vdata As String)

    mstrVersionNo = vdata

End Property

Public Property Let StepId(ByVal vdata As Long)

    mlngStepId = vdata

End Property

Public Property Let ConstraintId(ByVal vdata As Long)
    On Error GoTo ConstraintIdErr
    mstrSource = mstrModuleName & "ConstraintId"

    If (vdata > 0) Then
        mlngConstraintId = vdata
    Else
        ' Propogate this error back to the caller
        On Error GoTo 0
        Err.Raise vbObjectError +
errConstraintIdInvalid, _
            mstrSource,
LoadResString(errConstraintIdInvalid)
    End If

    Exit Property

ConstraintIdErr:
    LogErrors Errors
    mstrSource = mstrModuleName & "ConstraintId"
    On Error GoTo 0
    Err.Raise vbObjectError +
errConstraintIdSetFailed, _
        mstrSource,
LoadResString(errConstraintIdSetFailed)

End Property

Public Property Let GlobalStepId(ByVal vdata As Long)

    On Error GoTo GlobalStepIdErr
    mstrSource = mstrModuleName & "GlobalStepId"

    If (vdata > 0) Then
        mlngGlobalStepId = vdata
    Else
        ' Propogate this error back to the caller
        On Error GoTo 0
        Err.Raise vbObjectError +
errGlobalStepIdInvalid, _
            mstrSource,
LoadResString(errGlobalStepIdInvalid)
    End If

    Exit Property

GlobalStepIdErr:
    LogErrors Errors
    mstrSource = mstrModuleName & "GlobalStepId"
    On Error GoTo 0
    Err.Raise vbObjectError +
errGlobalStepIdSetFailed, _
        mstrSource,
LoadResString(errGlobalStepIdSetFailed)

End Property

Public Property Let ConstraintType(ByVal vdata As
ConstraintType)

    On Error GoTo ConstraintTypeErr

    ' A global step can be either a pre- or a post-
execution step.
    ' These constants have been defined in the
enumeration,
    ' ConstraintType, which is exposed
    Select Case vdata
        Case gintPreStep, gintPostStep
            mintConstraintType = vdata

        Case Else
            On Error GoTo 0
            Err.Raise vbObjectError +
errConstraintTypeInvalid, _
                mstrSource,
LoadResString(errConstraintTypeInvalid)
    End Select

    Exit Property

ConstraintTypeErr:
    LogErrors Errors
    mstrSource = mstrModuleName & "ConstraintType"
    On Error GoTo 0
    Err.Raise vbObjectError +
errConstraintTypeLetFailed, _
        mstrSource,
LoadResString(errConstraintTypeLetFailed)

End Property

Public Property Get ConstraintType() As
ConstraintType

    ConstraintType = mintConstraintType

End Property

Private Sub Class_Initialize()

    ' Initialize the operation indicator variable to
Query
    ' It will be modified later by the collection
class when
    ' inserts, updates or deletes are performed
    mintOperation = QueryOp

End Sub
```

cFailedStep.cls

```
VERSION 1.0 CLASS
BEGIN
  MultiUse = -1  'True
END
Attribute VB_Name = "cFailedStep"
Attribute VB_GlobalNameSpace = False
Attribute VB_Creatable = True
Attribute VB_PredeclaredId = False
Attribute VB_Exposed = False
'  FILE:        cFailedStep.cls
'               Microsoft TPC-H Kit Ver. 1.00
'               Copyright Microsoft, 1999
'               All Rights Reserved
'
'
'  PURPOSE:     Properties of a step execution
failure.
'  Contact:     Reshma Tharamal
(reshmat@microsoft.com)
'
Option Explicit

Public InstanceId As Long
Public StepId As Long
Public ParentStepId As Long
Public ContCriteria As ContinuationCriteria
Public EndTime As Currency
```


© 2006 Hewlett-Packard Company. All rights reserved.

```
Public AskResponse As Long
```

cFailedSteps.cls

```
VERSION 1.0 CLASS
BEGIN
  MultiUse = -1  'True
END
Attribute VB_Name = "cFailedSteps"
Attribute VB_GlobalNameSpace = False
Attribute VB_Creatable = True
Attribute VB_PredeclaredId = False
Attribute VB_Exposed = False
'  FILE:        cFailedSteps.cls
'               Microsoft TPC-H Kit Ver. 1.00
'               Copyright Microsoft, 1999
'               All Rights Reserved
'
'
'  PURPOSE:     This module encapsulates a collection
of failed steps. It
'               also determines whether sub-steps of
a passed in step need
'               to be skipped due to a failure.
'  Contact:     Reshma Tharamal
(reshmat@microsoft.com)
'
Option Explicit

Private mcFailedSteps As cVector
Public Function ExecuteSubStep(lParentStepId As Long)
As Boolean
    ' Returns False if there is any condition that
prevents sub-steps of the passed
    ' in instance from being executed
    Dim lIndex As Long

    ExecuteSubStep = True

    For lIndex = 0 To Count() - 1
        If mcFailedSteps(lIndex).ContCriteria =
gintOnFailureCompleteSiblings And _
                lParentStepId <>
mcFailedSteps(lIndex).ParentStepId Then
            ExecuteSubStep = False
            Exit For
        End If

        If mcFailedSteps(lIndex).ContCriteria =
gintOnFailureAbortSiblings And _
                lParentStepId =
mcFailedSteps(lIndex).ParentStepId Then
            ExecuteSubStep = False
            Exit For
        End If

        If mcFailedSteps(lIndex).ContCriteria =
gintOnFailureSkipSiblings And _
                lParentStepId =
mcFailedSteps(lIndex).ParentStepId Then
            ExecuteSubStep = False
            Exit For
        End If

        If mcFailedSteps(lIndex).ContCriteria =
gintOnFailureAbort Then
            ExecuteSubStep = False
            Exit For
        End If

    Next lIndex

End Function
Public Sub Add(ByVal objItem As cFailedStep)

    mcFailedSteps.Add objItem

End Sub
Public Function Delete(ByVal lPosition As Long) As
cFailedStep

    Set Delete = mcFailedSteps.Delete(lPosition)

End Function

Public Sub Clear()

    mcFailedSteps.Clear

End Sub
Public Function Count() As Long

    Count = mcFailedSteps.Count

End Function
Public Property Get Item(ByVal Position As Long) As
cFailedStep
Attribute Item.VB_UserMemId = 0

    Set Item = mcFailedSteps.Item(Position)

End Property

Public Function StepFailed(lStepId As Long) As
Boolean

    ' Returns True if a failure record already exists
for the passed in step
    Dim lIndex As Long

    StepFailed = False

    For lIndex = 0 To Count() - 1
        If mcFailedSteps(lIndex).StepId = lStepId
Then
            StepFailed = True
            Exit For
        End If
    Next lIndex

End Function

Private Sub Class_Initialize()

    Set mcFailedSteps = New cVector

End Sub

Private Sub Class_Terminate()

    Set mcFailedSteps = Nothing

End Sub
```

cFileInfo.cls

```
VERSION 1.0 CLASS
BEGIN
  MultiUse = -1  'True
END
Attribute VB_Name = "cFileInfo"
Attribute VB_GlobalNameSpace = False
Attribute VB_Creatable = True
Attribute VB_PredeclaredId = False
Attribute VB_Exposed = False
'  FILE:        cFileInfo.cls
'               Microsoft TPC-H Kit Ver. 1.00
'               Copyright Microsoft, 1999
'               All Rights Reserved
'
'
'  PURPOSE:     File Properties viz. name, handle,
etc.
'  Contact:     Reshma Tharamal
(reshmat@microsoft.com)
'
Option Explicit

Private mstrFileName As String
Private mintFileHandle As Integer
Private mdbsNodeDb As Database ' Since it is used to
form a cNodeCollection
Private mlngPosition As Long ' Since it is used to
form a cNodeCollection
Public Property Get FileName() As String

    FileName = mstrFileName

End Property
Public Property Let FileName(ByVal vdata As String)

    mstrFileName = vdata

End Property
Public Property Let FileHandle(ByVal vdata As
Integer)

    mintFileHandle = vdata

End Property
Public Property Set NodeDB(vdata As Database)

    Set mdbsNodeDb = vdata
```


© 2006 Hewlett-Packard Company. All rights reserved.

```
End Property

Public Property Get NodeDB() As Database

    Set NodeDB = mdbsNodeDb

End Property
Public Property Get Position() As Long

    Position = mlngPosition

End Property
Public Property Let Position(ByVal vdata As Long)

    mlngPosition = vdata

End Property

Public Property Get FileHandle() As Integer

    FileHandle = mintFileHandle

End Property
```

cFileSM.cls

```
VERSION 1.0 CLASS
BEGIN
  MultiUse = -1  'True
END
Attribute VB_Name = "cFileSM"
Attribute VB_GlobalNameSpace = False
Attribute VB_Creatable = True
Attribute VB_PredeclaredId = False
Attribute VB_Exposed = False
Attribute VB_Ext_KEY = "SavedWithClassBuilder" ,"Yes"
Attribute VB_Ext_KEY = "Top_Level" ,"Yes"
'  FILE:        cFileSM.cls
'               Microsoft TPC-H Kit Ver. 1.00
'               Copyright Microsoft, 1999
'               All Rights Reserved
'
'
'  PURPOSE:     Encapsulates functions to open a file
and write to it.
'  Contact:     Reshma Tharamal
(reshmat@microsoft.com)
'
Option Explicit

' Used to indicate the source module name when errors
' are raised by this class
Private Const mstrModuleName As String = "cFileSM."
Private mstrSource As String

Private mstrFileName As String
Private mintHFile As Integer
Private mstrFileHeader As String
Private mstrProjectName As String

Public Sub CloseFile()

    ' Close the file
    If mintHFile > 0 Then
        Call CloseFileSM(mstrFileName)
        mintHFile = 0
    End If

End Sub

Public Property Let ProjectName(ByVal vdata As
String)
    ' An optional field - will be appended to the
file
    ' header string if specified

    Const strProjectHdr As String = "Project Name:"

    mstrProjectName = vdata
    mstrFileHeader = mstrFileHeader & _
            Space$(1) & strProjectHdr & Space$(1) & _
            gstrSQ & vdata & gstrSQ

End Property
Public Property Get ProjectName() As String

    ProjectName = mstrProjectName

End Property
Public Property Get FileName() As String

    FileName = mstrFileName

End Property
Public Property Let FileName(ByVal vdata As String)

    mstrFileName = vdata

End Property
Public Sub WriteLine(strMsg As String)

    ' Writes the passed in string to the file
    Call WriteToFile(strMsg, False)

End Sub

Public Sub WriteField(strMsg As String)

    ' Writes the passed in string to the file
    Call WriteToFile(strMsg, True)

End Sub

Private Sub WriteToFile(strMsg As String, _
        blnContinue As Boolean)
    ' Writes the passed in string to the file - the
    ' Continue flag indicates whether the next line
will
    ' be continued on the same line or printed on a
new one

    On Error GoTo WriteToFileErr

    ' Open the file if it hasn't been already
    If mintHFile = 0 Then

        ' If the filename has not been initialized,
do not
        ' attempt to open it
        If mstrFileName <> gstrEmptyString Then

            mintHFile = OpenFileSM(mstrFileName)

            If mintHFile = 0 Then
                ' The Open File command failed for
some reason
                ' No point in trying to write the
file header
            Else
                ' Print a file header, if a header
string has been
                ' initialized
                If mstrFileHeader <> gstrEmptyString
Then
                    Print #mintHFile,
                    Print #mintHFile, mstrFileHeader
                    Print #mintHFile,
                End If
            End If
        End If
    End If

    If mintHFile <> 0 Then
        If strMsg = gstrEmptyString Then
            Print #mintHFile,
        Else
            If blnContinue Then
                ' Write the message to the file -
continue
                ' all subsequent characters on the
same line
                Print #mintHFile, strMsg;
            Else
                ' Write the message to the file
                Print #mintHFile, strMsg
            End If
        End If
    Else
        ' Display the string to the user instead of
        ' trying to write it to the file
        ' This could be the project error log that we
were
        ' trying to open! Play it safe and display
errors - do
        ' not try to log them.
        MsgBox strMsg, vbOKOnly
    End If

    Exit Sub

WriteToFileErr:
    ' Log the error code raised by Visual Basic
    Call DisplayErrors(Errors)

    ' Display the string to the user instead of
    ' trying to write it to the file
```


© 2006 Hewlett-Packard Company. All rights reserved.

```
    MsgBox strMsg, vbOKOnly

End Sub
Public Property Let FileHeader(ByVal vdata As String)

    mstrFileHeader = vdata

End Property
Public Property Get FileHeader() As String

    FileHeader = mstrFileHeader

End Property

Private Sub Class_Terminate()

    ' Close the file opened by this instance
    Call CloseFile

End Sub
```

cGlobalStep.cls

```
VERSION 1.0 CLASS
BEGIN
  MultiUse = -1  'True
END
Attribute VB_Name = "cGlobalStep"
Attribute VB_GlobalNameSpace = False
Attribute VB_Creatable = True
Attribute VB_PredeclaredId = False
Attribute VB_Exposed = False
'  FILE:        cGlobalStep.cls
'               Microsoft TPC-H Kit Ver. 1.00
'               Copyright Microsoft, 1999
'               All Rights Reserved
'
'
'  PURPOSE:     Encapsulates the properties and
methods of a global step.
'               Implements the cStep class - carries
out initializations
'               and validations that are specific to
global steps.
'  Contact:     Reshma Tharamal
(reshmat@microsoft.com)
'
Option Explicit

Implements cStep

' Object variable to keep the reference in
Private mcStep As cStep

' Used to indicate the source module name when errors
' are raised by this class
Private mstrSource As String
Private Const mstrModuleName As String =
"cGlobalStep."

Private Sub cStep_AddAllIterators()

    Call mcStep.AddAllIterators

End Sub

Private Sub cStep_AddIterator(cItRecord As cIterator)

    Call mcStep.AddIterator(cItRecord)

End Sub

Private Property Let cStep_ArchivedFlag(ByVal RHS As
Boolean)

    mcStep.ArchivedFlag = RHS

End Property

Private Property Get cStep_ArchivedFlag() As Boolean

    cStep_ArchivedFlag = mcStep.ArchivedFlag

End Property

Private Sub Class_Initialize()

    ' Create the object
    Set mcStep = New cStep

    ' Initialize the object with valid values for a
global step
    ' The global flag should be the first field to be
initialized
    ' since subsequent validations might try to check
if the
    ' step being created is global
    mcStep.GlobalFlag = True
    mcStep.StepType = gintGlobalStep

    ' A global step cannot have any sub-steps
associated with it
    ' Hence, it will always be at Step Level 0
    mcStep.ParentStepId = 0
    mcStep.ParentVersionNo = gstrMinVersion
    mcStep.StepLevel = 0

    ' The enabled flag must be False for all global
steps
    ' Global steps can be of two types
    ' a. Those that are run globally within a
workspace either
    '    before every step, after every step or
during the entire
    '    run, depending on the global run method
    ' b. Those that are not run globally, but qualify
to be either
    '    pre or post-execution steps for other steps
in the workspace.
    '    Whether or not such a step will be executed
depends on
    '    whether the step for which it is defined as
a pre/post
    '    step will be executed
    mcStep.EnabledFlag = False

    mcStep.ContinuationCriteria = gintNoOption
    mcStep.DegreeParallelism = gstrGlobalParallelism

End Sub
Private Sub Class_Terminate()

    ' Remove the step object
    Set mcStep = Nothing

End Sub

Private Sub cStep_Add()

    ' Call a private procedure to see if the step
text has been
    ' entered - since a global step actually executes
a step, entry
    ' of the text is mandatory
    Call StepTextOrFileEntered

    ' Call the Add method of the step class to carry
out the insert
    mcStep.Add

End Sub

Private Function cStep_Clone(Optional cCloneStep As
cStep) As cStep

    Dim cNewGlobal As cGlobalStep

    Set cNewGlobal = New cGlobalStep
    Set cStep_Clone = mcStep.Clone(cNewGlobal)

End Function


Private Property Get cStep_ContinuationCriteria() As
ContinuationCriteria

    cStep_ContinuationCriteria =
mcStep.ContinuationCriteria

End Property

Private Property Let cStep_ContinuationCriteria(ByVal
RHS As ContinuationCriteria)

    ' The continuation criteria field will always be
empty for a
    ' global step
    mcStep.ContinuationCriteria = 0

End Property
```


© 2006 Hewlett-Packard Company. All rights reserved.

```
Private Property Let cStep_DegreeParallelism(ByVal
RHS As String)

    ' Will always be zero for a global step
    mcStep.DegreeParallelism = gstrGlobalParallelism

End Property

Private Property Get cStep_DegreeParallelism() As
String

    cStep_DegreeParallelism =
mcStep.DegreeParallelism

End Property

Private Sub cStep_DeleteIterator(cItRecord As
cIterator)

    Call mcStep.DeleteIterator(cItRecord)

End Sub

Private Sub cStep_Delete()

    mcStep.Delete

End Sub

Private Property Get cStep_EnabledFlag() As Boolean

    cStep_EnabledFlag = mcStep.EnabledFlag

End Property

Private Property Let cStep_EnabledFlag(ByVal RHS As
Boolean)

    ' The enabled flag must be False for all global
steps
    ' Global steps can be of two types
    ' a. Those that are run globally within a
workspace either
    '    before every step, after every step or
during the entire
    '    run, depending on the global run method
    ' b. Those that are not run globally, but qualify
to be either
    '    pre or post-execution steps for other steps
in the workspace.
    '    Whether or not such a step will be executed
depends on
    '    whether the step for which it is defined as
a pre/post
    '    step will be executed
    mcStep.EnabledFlag = False

End Property

Private Property Let cStep_ErrorFile(ByVal RHS As
String)

    mcStep.ErrorFile = RHS

End Property

Private Property Get cStep_ErrorFile() As String

    cStep_ErrorFile = mcStep.ErrorFile

End Property

Private Property Let cStep_ExecutionMechanism(ByVal
RHS As ExecutionMethod)

    ' Whether or not the Execution Mechanism is valid
will be
    ' checked by the Step class
    mcStep.ExecutionMechanism = RHS

End Property

Private Property Get cStep_ExecutionMechanism() As
ExecutionMethod

    cStep_ExecutionMechanism =
mcStep.ExecutionMechanism

End Property

Private Property Let cStep_FailureDetails(ByVal RHS
As String)

    ' Whether or not the Failure Details are valid
for the
    ' selected failure criteria will be checked by
the Step class
    mcStep.FailureDetails = RHS

End Property

Private Property Get cStep_FailureDetails() As String

    cStep_FailureDetails = mcStep.FailureDetails

End Property

Private Property Get cStep_GlobalFlag() As Boolean

    cStep_GlobalFlag = mcStep.GlobalFlag

End Property

Private Property Let cStep_GlobalFlag(ByVal RHS As
Boolean)

    ' Set the global flag to true
    mcStep.GlobalFlag = True

End Property

Private Function cStep_IncVersionX() As String

    cStep_IncVersionX = mcStep.IncVersionX

End Function

Private Function cStep_IncVersionY() As String

    cStep_IncVersionY = mcStep.IncVersionY

End Function


'Private Property Let cStep_GlobalRunMethod(ByVal RHS
As Integer)
'
'    ' Whether or not the Global Run Method is valid
for the step
'    ' will be checked by the Step class
'    mcStep.GlobalRunMethod = RHS
'
'End Property
'
'Private Property Get cStep_GlobalRunMethod() As
Integer
'
'    cStep_GlobalRunMethod = mcStep.GlobalRunMethod
'
'End Property
'
Private Property Get cStep_IndOperation() As
Operation

    cStep_IndOperation = mcStep.IndOperation

End Property

Private Property Let cStep_IndOperation(ByVal RHS As
Operation)

    mcStep.IndOperation = RHS

End Property

Private Sub cStep_InsertIterator(cItRecord As
cIterator)

    Call mcStep.InsertIterator(cItRecord)

End Sub

Private Function cStep_IsNewVersion() As Boolean
    cStep_IsNewVersion = mcStep.IsNewVersion
End Function

Private Function cStep_IteratorCount() As Long

    cStep_IteratorCount = mcStep.IteratorCount

End Function

Private Property Let cStep_IteratorName(ByVal RHS As
String)

    mcStep.IteratorName = RHS

End Property
```


© 2006 Hewlett-Packard Company. All rights reserved.

```
Private Property Get cStep_IteratorName() As String

    cStep_IteratorName = mcStep.IteratorName

End Property

Private Function cStep_Iterators() As Variant

    cStep_Iterators = mcStep.Iterators

End Function

Private Sub cStep_LoadIterator(cItRecord As
cIterator)

    Call mcStep.LoadIterator(cItRecord)

End Sub

'Private Property Let cStep_LogFile(ByVal RHS As
String)
'
'    mcStep.LogFile = RHS
'
'End Property
'
'Private Property Get cStep_LogFile() As String
'
'    cStep_LogFile = mcStep.LogFile
'
'End Property

Private Sub cStep_ModifyIterator(cItRecord As
cIterator)

    Call mcStep.ModifyIterator(cItRecord)

End Sub

Private Sub cStep_Modify()

    ' Call a private procedure to see if the step
text has been
    ' entered - since a global step actually executes
a step,
    ' entry of the text is mandatory
    Call StepTextOrFileEntered

    ' Call the Modify method of the step class to
carry out the update
    mcStep.Modify

End Sub

Private Property Get cStep_NextStepId() As Long

    cStep_NextStepId = mcStep.NextStepId

End Property

Private Property Set cStep_NodeDB(RHS As
DAO.Database)

    Set mcStep.NodeDB = RHS

End Property

Private Property Get cStep_NodeDB() As DAO.Database

    Set cStep_NodeDB = mcStep.NodeDB

End Property

Private Function cStep_OldVersionNo() As String
    cStep_OldVersionNo = mcStep.OldVersionNo
End Function

Private Property Let cStep_OutputFile(ByVal RHS As
String)

    mcStep.OutputFile = RHS

End Property

Private Property Get cStep_OutputFile() As String

    cStep_OutputFile = mcStep.OutputFile

End Property

Private Property Let cStep_ParentStepId(ByVal RHS As
Long)

    ' A global step cannot have any sub-steps
associated with it
    ' Hence, the parent step id and parent version
number will be zero
    mcStep.ParentStepId = 0

End Property

Private Property Get cStep_ParentStepId() As Long

    cStep_ParentStepId = mcStep.ParentStepId

End Property

Private Property Let cStep_ParentVersionNo(ByVal RHS
As String)

    ' A global step cannot have any sub-steps
associated with it
    ' Hence, the parent step id and parent version
number will be zero
    mcStep.ParentVersionNo = gstrMinVersion

End Property

Private Property Get cStep_ParentVersionNo() As
String

    cStep_ParentVersionNo = mcStep.ParentVersionNo

End Property

Private Property Let cStep_Position(ByVal RHS As
Long)

    mcStep.Position = RHS

End Property

Private Property Get cStep_Position() As Long

    cStep_Position = mcStep.Position

End Property

Private Sub cStep_RemoveIterator(cItRecord As
cIterator)

    Call mcStep.RemoveIterator(cItRecord)

End Sub

Private Sub cStep_SaveIterators()

    Call mcStep.SaveIterators

End Sub

Private Property Let cStep_SequenceNo(ByVal RHS As
Integer)

    mcStep.SequenceNo = RHS

End Property

Private Property Get cStep_SequenceNo() As Integer

    cStep_SequenceNo = mcStep.SequenceNo

End Property

Private Property Let cStep_StepId(ByVal RHS As Long)

    mcStep.StepId = RHS

End Property
Private Property Get cStep_StepId() As Long

    cStep_StepId = mcStep.StepId

End Property


Private Property Let cStep_StepLabel(ByVal RHS As
String)

    mcStep.StepLabel = RHS

End Property

Private Property Get cStep_StepLabel() As String

    cStep_StepLabel = mcStep.StepLabel

End Property
```


© 2006 Hewlett-Packard Company. All rights reserved.

```
Private Property Let cStep_StartDir(ByVal RHS As
String)

    mcStep.StartDir = RHS

End Property

Private Property Get cStep_StartDir() As String

    cStep_StartDir = mcStep.StartDir

End Property

Private Property Let cStep_StepLevel(ByVal RHS As
Integer)

    ' A global step cannot have any sub-steps
associated with it
    ' Hence, it will always be at step level 0
    mcStep.StepLevel = 0

End Property

Private Property Get cStep_StepLevel() As Integer

    cStep_StepLevel = mcStep.StepLevel

End Property

Private Property Let cStep_StepText(ByVal RHS As
String)

    mcStep.StepText = RHS

End Property

Private Property Get cStep_StepText() As String

    cStep_StepText = mcStep.StepText

End Property

Private Property Let cStep_StepTextFile(ByVal RHS As
String)

    mcStep.StepTextFile = RHS

End Property

Private Property Get cStep_StepTextFile() As String

    cStep_StepTextFile = mcStep.StepTextFile

End Property

Private Property Let cStep_StepType(RHS As
gintStepType)

    mcStep.StepType = gintGlobalStep

End Property

Private Property Get cStep_StepType() As gintStepType

    cStep_StepType = mcStep.StepType

End Property

Private Sub cStep_UnloadIterators()

    Call mcStep.UnloadIterators

End Sub

Private Sub cStep_UpdateIterator(cItRecord As
cIterator)

    Call mcStep.UpdateIterator(cItRecord)

End Sub

Private Sub cStep_UpdateIteratorVersion()

    Call mcStep.UpdateIteratorVersion

End Sub

Private Sub cStep_Validate()
    ' The validate routines for each of the steps
will
    ' carry out the specific validations for the type
and
    ' call the generic validation routine

    On Error GoTo cStep_ValidateErr
    mstrSource = mstrModuleName & "cStep_Validate"

    ' Validations specific to global steps

    ' Check if the step text or a file name has been
    ' specified
    Call StepTextOrFileEntered

    ' The step level must be zero for all globals
    If mcStep.StepLevel <> 0 Then
        ShowError errStepLevelZeroForGlobal
        On Error GoTo 0
        Err.Raise vbObjectError + errValidateFailed,
_
                gstrSource, _
                LoadResString(errValidateFailed)
    End If

    If mcStep.EnabledFlag Then
        ShowError errEnabledFlagFalseForGlobal
        On Error GoTo 0
        Err.Raise vbObjectError + errValidateFailed,
_
                gstrSource, _
                LoadResString(errValidateFailed)
    End If

    If mcStep.DegreeParallelism > 0 Then
        ShowError errDegParallelismNullForGlobal
        On Error GoTo 0
        Err.Raise vbObjectError + errValidateFailed,
_
                gstrSource, _
                LoadResString(errValidateFailed)
    End If

    If mcStep.ContinuationCriteria > 0 Then
        ShowError errContCriteriaNullForGlobal
        On Error GoTo 0
        Err.Raise vbObjectError + errValidateFailed,
_
                gstrSource, _
                LoadResString(errValidateFailed)
    End If

    mcStep.Validate

    Exit Sub

cStep_ValidateErr:
    LogErrors Errors
    mstrSource = mstrModuleName & "cStep_Validate"
    On Error GoTo 0
    Err.Raise vbObjectError + errValidateFailed, _
            mstrSource, _
            LoadResString(errValidateFailed)
End Sub
Private Sub StepTextOrFileEntered()
    ' Checks if either the step text or the name of
the file containing
    ' the text has been entered
    ' If both of them are null or both of them are
not null,
    ' the global step is invalid and an error is
raised

    If StringEmpty(mcStep.StepText) And
StringEmpty(mcStep.StepTextFile) Then
        ShowError errStepTextAndFileNull
        On Error GoTo 0
        Err.Raise vbObjectError +
errStepTextAndFileNull, _
            mstrSource,
LoadResString(errStepTextAndFileNull)
    ElseIf Not StringEmpty(mcStep.StepText) And Not
StringEmpty(mcStep.StepTextFile) Then
        ShowError errStepTextOrFile
        On Error GoTo 0
        Err.Raise vbObjectError + errStepTextOrFile,
_
            mstrSource,
LoadResString(errStepTextOrFile)
    End If

End Sub

Private Property Let cStep_VersionNo(ByVal RHS As
String)

    mcStep.VersionNo = RHS

End Property
```


© 2006 Hewlett-Packard Company. All rights reserved.

```
Private Property Get cStep_VersionNo() As String

    cStep_VersionNo = mcStep.VersionNo

End Property

Private Property Let cStep_WorkspaceId(ByVal RHS As
Long)

    mcStep.WorkspaceId = RHS

End Property

Private Property Get cStep_WorkspaceId() As Long

    cStep_WorkspaceId = mcStep.WorkspaceId

End Property
```

cInstance.cls

```
VERSION 1.0 CLASS
BEGIN
  MultiUse = -1  'True
END
Attribute VB_Name = "cInstance"
Attribute VB_GlobalNameSpace = False
Attribute VB_Creatable = True
Attribute VB_PredeclaredId = False
Attribute VB_Exposed = False
'  FILE:        cInstance.cls
'               Microsoft TPC-H Kit Ver. 1.00
'               Copyright Microsoft, 1999
'               All Rights Reserved
'
'
'  PURPOSE:     Encapsulates the properties and
methods of an instance.
'               An instance is created when a step is
executed for a
'               particular iterator value (if
applicable) at 'run' time.
'               Contains functions to determine if an
instance is running,
'               complete, and so on.
'  Contact:     Reshma Tharamal
(reshmat@microsoft.com)
'
Option Explicit

' Used to indicate the source module name when errors
' are raised by this class
Private Const mstrModuleName As String = "cInstance."
Private mstrSource As String

Private mcStep As cStep
Public Key As String ' Node key for the step being
executed
Public InstanceId As Long
Public ParentInstanceId As Long ' The parent instance
Private mblnNoMoreToStart As Boolean
Private mblnComplete As Boolean
Public StartTime As Currency
Public EndTime As Currency
Public ElapsedTime As Currency
Private mintStatus As InstanceStatus
Public DegreeParallelism As Integer
Private mcIterators As cRunColIt

' A collection of all the sub-steps for this step
Private mcSubSteps As cSubSteps
Public Sub UpdateStartTime(lStepId As Long, Optional
ByVal StartTm As Currency = gdtmEmpty, _
        Optional ByVal EndTm As Currency = gdtmEmpty,
_
        Optional ByVal Elapsed As Currency = 0)
    ' We do not maintain start and end timestamps for
the constraint
    ' of a step. Hence we check if the process that
just started/
    ' terminated is the worker step that is being
executed. If so,
    ' we update the start/end time and status on the
instance record.

    BugAssert (StartTm <> gdtmEmpty) Or (EndTm <>
gdtmEmpty), "Mandatory parameter missing."

    ' Make sure that we are executing the actual step
and not
    ' a pre or post-execution constraint
    If mcStep.StepId = lStepId Then
        If StartTm <> 0 Then
            StartTime = StartTm
            mintStatus = gintRunning
        Else
            EndTime = EndTm
            ElapsedTime = Elapsed
            mintStatus = gintComplete
        End If
    End If

End Sub
Public Function ValidForIteration(cParentInstance As
cInstance, _
        ByVal intConsType As ConstraintType) As
Boolean
    ' Returns true if the instance passed in is the
first or
    ' last iteration for the step, depending on the
constraint type

    Dim cSubStepRec As cSubStep
    Dim vntIterators As Variant

    On Error GoTo ValidForIterationErr

    If cParentInstance Is Nothing Then
        ' This will only be true for the dummy
instance, which
        ' cannot have any iterators defined for it
        ValidForIteration = True
        Exit Function
    End If
    vntIterators = mcStep.Iterators

    If Not StringEmpty(mcStep.IteratorName) And Not
IsEmpty(vntIterators) Then

        Set cSubStepRec =
cParentInstance.QuerySubStep(mcStep.StepId)

        If intConsType = gintPreStep Then
            ' Pre-execution constraints will only be
executed
            ' before the first iteration
            If cSubStepRec.LastIterator.IteratorType
= gintValue Then
                ValidForIteration =
(cSubStepRec.LastIterator.Sequence = _
                        gintMinIteratorSequence)
            Else
                ValidForIteration =
(cSubStepRec.LastIterator.Value = _

cSubStepRec.LastIterator.RangeFrom)
            End If
        Else
            ' Post-execution constraints will only be
executed
            ' after the last iteration - check if
there are any
            ' pending iterations
            ValidForIteration =
cSubStepRec.NextIteration(mcStep) Is Nothing
        End If
    Else
        ValidForIteration = True
    End If

    Exit Function

ValidForIterationErr:
    ' Log the error code raised by Visual Basic
    Call LogErrors(Errors)
    On Error GoTo 0
    mstrSource = mstrModuleName & "ValidForIteration"
    Err.Raise vbObjectError + errExecInstanceFailed,
_
            mstrSource,
LoadResString(errExecInstanceFailed)

End Function

Public Sub CreateSubStep(cSubStepDtls As cStep,
RunParams As cArrParameters)

    Dim cNewSubStep As cSubStep

    On Error GoTo CreateSubStepErr

    Set cNewSubStep = New cSubStep

    cNewSubStep.StepId = cSubStepDtls.StepId
    cNewSubStep.TasksComplete = 0
    cNewSubStep.TasksRunning = 0
```


© 2006 Hewlett-Packard Company. All rights reserved.

```
    ' Initialize the iterator for the instance
    Set cNewSubStep.LastIterator = New cRunItDetails
    Call cNewSubStep.InitializeIt(cSubStepDtls,
RunParams)

    ' Add add the substep to the collection
    mcSubSteps.Add cNewSubStep

    Set cNewSubStep = Nothing

    Exit Sub

CreateSubStepErr:
    ' Log the error code raised by Visual Basic
    Call LogErrors(Errors)
    On Error GoTo 0
    mstrSource = mstrModuleName & "CreateSubStep"
    Err.Raise vbObjectError + errProgramError,
mstrSource, _
        LoadResString(errProgramError)

End Sub

Public Function QuerySubStep(ByVal SubStepId As Long)
As cSubStep
    ' Retrieves the sub-step record for the passed in
sub-step id

    Dim lngIndex As Long

    On Error GoTo QuerySubStepErr

    ' Find the sub-step node with the matching step
id
    For lngIndex = 0 To mcSubSteps.Count - 1
        If mcSubSteps(lngIndex).StepId = SubStepId
Then
            Set QuerySubStep = mcSubSteps(lngIndex)
            Exit For
        End If
    Next lngIndex

    Exit Function

QuerySubStepErr:
    ' Log the error code raised by Visual Basic
    Call LogErrors(Errors)
    On Error GoTo 0
    mstrSource = mstrModuleName & "QuerySubStep"
    Err.Raise vbObjectError + errNavInstancesFailed,
_
            mstrSource,
LoadResString(errNavInstancesFailed)

End Function
Public Property Let AllStarted(ByVal vdata As
Boolean)

    'bugmessage "Set All Started to " & vData & " for
: " & _
        mstrKey

    mblnNoMoreToStart = vdata

End Property
Public Property Get AllStarted() As Boolean

    AllStarted = mblnNoMoreToStart

End Property
Public Property Let AllComplete(ByVal vdata As
Boolean)

    'bugmessage "Set All Complete to " & vData & "
for : " & _
        mstrKey

    mblnComplete = vdata

End Property

Public Property Get AllComplete() As Boolean

    AllComplete = mblnComplete

End Property

Public Sub ChildExecuted(mlngStepId As Long)
    ' This procedure is called when a sub-step
executes.

    Dim lngIndex As Long

    On Error GoTo ChildExecutedErr

    BugAssert mcStep.StepType = gintManagerStep

    For lngIndex = 0 To mcSubSteps.Count - 1
        If mcSubSteps(lngIndex).StepId = mlngStepId
Then
            mcSubSteps(lngIndex).TasksRunning = _
                    mcSubSteps(lngIndex).TasksRunning
+ 1
'            BugMessage "Tasks Running for Step Id :
" & _
'
CStr(mcSubSteps(lngIndex).StepId) & _
'                    " Instance Id: " & InstanceId &
_
'                    " = " &
mcSubSteps(lngIndex).TasksRunning
            Exit For
        End If
    Next lngIndex

    If lngIndex > mcSubSteps.Count - 1 Then
        ' The child step wasn't found - raise an
error
        On Error GoTo 0
        Err.Raise vbObjectError + errInvalidChild,
mstrModuleName, _
                LoadResString(errInvalidChild)
    End If

    Exit Sub

ChildExecutedErr:
    ' Log the error code raised by Visual Basic
    Call LogErrors(Errors)
    On Error GoTo 0
    Err.Raise vbObjectError + errInstanceOpFailed,
mstrModuleName & "ChildExecuted", _
            LoadResString(errInstanceOpFailed)

End Sub
Public Sub ChildTerminated(mlngStepId As Long)
    ' This procedure is called when any sub-step
process
    ' terminates. Note: The TasksComplete field will
be
    ' updated only when all the instances for a sub-
step
    ' complete execution.
    Dim lngIndex As Long

    On Error GoTo ChildTerminatedErr

    BugAssert mcStep.StepType = gintManagerStep

    For lngIndex = 0 To mcSubSteps.Count - 1

        If mcSubSteps(lngIndex).StepId = mlngStepId
Then
            mcSubSteps(lngIndex).TasksRunning = _
                    mcSubSteps(lngIndex).TasksRunning
- 1
'            BugMessage "Tasks Running for Step Id :
" & _
'
CStr(mcSubSteps(lngIndex).StepId) & _
'                    " Instance Id: " & InstanceId &
_
'                    " = " &
mcSubSteps(lngIndex).TasksRunning

            BugAssert
mcSubSteps(lngIndex).TasksRunning >= 0, _
                    "Tasks running for " &
CStr(mlngStepId) & _
                    " Instance Id " & InstanceId & "
is less than 0."
            Exit For
        End If
    Next lngIndex

    If lngIndex > mcSubSteps.Count - 1 Then
        ' The child step wasn't found - raise an
error
        On Error GoTo 0
        Err.Raise errInvalidChild, mstrModuleName &
"ChildTerminated", _
                LoadResString(errInvalidChild)
    End If

    Exit Sub

ChildTerminatedErr:
    ' Log the error code raised by Visual Basic
    Call LogErrors(Errors)
```


© 2006 Hewlett-Packard Company. All rights reserved.

```
    On Error GoTo 0
    mstrSource = mstrModuleName & "ChildTerminated"
    Err.Raise vbObjectError + errInstanceOpFailed,
mstrSource, _
            LoadResString(errInstanceOpFailed)

End Sub
Public Sub ChildCompleted(mlngStepId As Long)
    ' This procedure is called when any a sub-step
completes
    ' execution. Note: The TasksComplete field will
be
    ' incremented.
    Dim lngIndex As Long

    On Error GoTo ChildCompletedErr

    BugAssert mcStep.StepType = gintManagerStep

    For lngIndex = 0 To mcSubSteps.Count - 1
        BugAssert mcSubSteps(lngIndex).TasksComplete
>= 0, _
                "Tasks complete for " &
CStr(mcSubSteps(lngIndex).StepId) & _
                " Instance Id " & InstanceId & " is
less than 0."

        If mcSubSteps(lngIndex).StepId = mlngStepId
Then
            mcSubSteps(lngIndex).TasksComplete = _

mcSubSteps(lngIndex).TasksComplete + 1
'             BugMessage "Tasks Complete for Step Id :
" & _
'
CStr(mcSubSteps(lngIndex).StepId) & _
'                    " Instance Id: " & InstanceId &
_
'                    " = " &
mcSubSteps(lngIndex).TasksComplete
            Exit For
        End If
    Next lngIndex

    If lngIndex > mcSubSteps.Count - 1 Then
        ' The child step wasn't found - raise an
error
        On Error GoTo 0
        Err.Raise errInvalidChild, mstrModuleName, _
                LoadResString(errInvalidChild)
    End If

    Exit Sub

ChildCompletedErr:
    ' Log the error code raised by Visual Basic
    Call LogErrors(Errors)
    On Error GoTo 0
    Err.Raise vbObjectError + errInstanceOpFailed,
mstrModuleName & "ChildCompleted", _
            LoadResString(errInstanceOpFailed)

End Sub
```

```
Public Sub ChildDeleted(mlngStepId As Long)
    ' This procedure is called when a sub-step needs
to be re-executed
    ' Note: The TasksComplete field is decremented.
We needn't worry about
    ' the TasksRunning field since no steps are
currently running.
    Dim lngIndex As Long

    On Error GoTo ChildDeletedErr

    BugAssert mcStep.StepType = gintManagerStep

    For lngIndex = 0 To mcSubSteps.Count - 1

        If mcSubSteps(lngIndex).StepId = mlngStepId
Then
            mcSubSteps(lngIndex).TasksRunning = _
                    mcSubSteps(lngIndex).TasksRunning
- 1

            BugAssert
mcSubSteps(lngIndex).TasksRunning >= 0, _
                    "Tasks running for " &
CStr(mcSubSteps(lngIndex).StepId) & _
                    " Instance Id " & InstanceId & "
is less than 0."
            Exit For
        End If
    Next lngIndex

    If lngIndex > mcSubSteps.Count - 1 Then
        ' The child step wasn't found - raise an
error
        On Error GoTo 0
        Err.Raise errInvalidChild, mstrModuleName, _
                LoadResString(errInvalidChild)
    End If

    Exit Sub

ChildDeletedErr:
    ' Log the error code raised by Visual Basic
    Call LogErrors(Errors)
    On Error GoTo 0
    Err.Raise vbObjectError + errInstanceOpFailed,
mstrModuleName & "ChildDeleted", _
            LoadResString(errInstanceOpFailed)

End Sub
Private Sub RaiseErrForWorker()

    If mcStep.StepType <> gintManagerStep Then
        On Error GoTo 0
        mstrSource = mstrModuleName &
"RaiseErrForWorker"
        Err.Raise vbObjectError +
errInvalidForWorker, _
                mstrSource, _
                LoadResString(errInvalidForWorker)
    End If

End Sub
```

```
Public Property Get Step() As cStep

    Set Step = mcStep

End Property
Public Property Get Iterators() As cRunColIt

    Set Iterators = mcIterators

End Property
Public Property Get SubSteps() As cSubSteps

    Call RaiseErrForWorker

    Set SubSteps = mcSubSteps

End Property
Public Property Set Step(cRunStep As cStep)

    Set mcStep = cRunStep

End Property

Public Property Set Iterators(cIts As cRunColIt)

    Set mcIterators = cIts

End Property
Public Property Get IsPending() As Boolean
    ' Returns true if the step has any substeps that
need
    ' execution
    Dim lngIndex As Long
    Dim lngRunning As Long

    Call RaiseErrForWorker

    If Not mblnComplete And Not mblnNoMoreToStart
Then
        ' Get a count of all the substeps that are
already being
        ' executed
        lngRunning = 0
        For lngIndex = 0 To mcSubSteps.Count - 1
            lngRunning = lngRunning +
mcSubSteps(lngIndex).TasksRunning
        Next lngIndex

        IsPending = (lngRunning < DegreeParallelism)
    Else
        ' This should be sufficient to prove that
there r no
        ' more sub-steps to be executed.
        ' mblnComplete: Handles the case where all
steps have
        ' been executed
        ' mblnNoMoreToStart: Handles the case where
the step
        ' has a degree of parallelism greater than
the total
        ' number of sub-steps available to execute
        IsPending = False
```


© 2006 Hewlett-Packard Company. All rights reserved.

```
    End If

End Property
Public Property Get IsRunning() As Boolean
    ' Returns true if the any one of the substeps is
still
    ' executing
    Dim lngIndex As Long

    Call RaiseErrForWorker

    IsRunning = False

    ' If a substep has no currently executing tasks
and
    ' the tasks completed is greater than zero, then
we can
    ' assume that it has completed execution
(otherwise we
    ' would've run a new task the moment one
completed!)
    For lngIndex = 0 To mcSubSteps.Count - 1
        If mcSubSteps(lngIndex).TasksRunning > 0 Then
            IsRunning = True
            Exit For
        End If
    Next lngIndex

End Property
Public Property Get TotalRunning() As Long
    ' Returns the total number of substeps that are
executing
    Dim lngTotalProcesses As Long
    Dim lngIndex As Long

    Call RaiseErrForWorker

    lngTotalProcesses = 0
    For lngIndex = 0 To mcSubSteps.Count - 1
        BugAssert mcSubSteps(lngIndex).TasksRunning
>= 0, _
                "Tasks running for " &
CStr(mcSubSteps(lngIndex).StepId) & _
                " is less than 0."
        lngTotalProcesses = lngTotalProcesses +
mcSubSteps(lngIndex).TasksRunning
    Next lngIndex

    TotalRunning = lngTotalProcesses
End Property
Public Property Get RunningForStep(lngSubStepId As
Long) As Long
    ' Returns the total number of instances of the
substep
    ' that are executing
    Dim lngIndex As Long

    Call RaiseErrForWorker

    For lngIndex = 0 To mcSubSteps.Count - 1
        BugAssert mcSubSteps(lngIndex).TasksRunning
>= 0, _
                "Tasks running for " &
CStr(mcSubSteps(lngIndex).StepId) & _
                " is less than 0."

        If mcSubSteps(lngIndex).StepId = lngSubStepId
Then
            RunningForStep =
mcSubSteps(lngIndex).TasksRunning
            Exit For
        End If
    Next lngIndex

    If lngIndex > mcSubSteps.Count - 1 Then
        ' The child step wasn't found - raise an
error
        On Error GoTo 0
        Err.Raise errInvalidChild, mstrSource, _
                LoadResString(errInvalidChild)
    End If

End Property

Public Property Let Status(ByVal vdata As
InstanceStatus)

    mintStatus = vdata

End Property

Public Property Get Status() As InstanceStatus

    Status = mintStatus

End Property
Private Sub Class_Initialize()

    Set mcSubSteps = New cSubSteps

    mblnNoMoreToStart = False
    mblnComplete = False
    StartTime = gdtmEmpty
    EndTime = gdtmEmpty

End Sub

Private Sub Class_Terminate()

    mcSubSteps.Clear
    Set mcSubSteps = Nothing

End Sub
```

clnstances.cls

```
VERSION 1.0 CLASS
BEGIN
  MultiUse = -1  'True
END
Attribute VB_Name = "cInstances"
Attribute VB_GlobalNameSpace = False
Attribute VB_Creatable = True
Attribute VB_PredeclaredId = False
Attribute VB_Exposed = False
'  FILE:       cInstances.cls
'              Microsoft TPC-H Kit Ver. 1.00
'              Copyright Microsoft, 1999
'              All Rights Reserved
'
'
'  PURPOSE:    Implements a collection of cInstance
objects.
'              Type-safe wrapper around cVector.
'              Also contains additional functions to
query an instance, etc.
'  Contact:    Reshma Tharamal
(reshmat@microsoft.com)
'
Option Explicit

' Used to indicate the source module name when errors
' are raised by this class
Private Const mstrModuleName As String = "cInstance."
Private mstrSource As String

Private mcInstances As cVector

Public Function QueryInstance(ByVal InstanceId As
Long) As cInstance
    ' Retrieves the record for the passed in instance
from
    ' the collection

    Dim lngIndex As Long

    On Error GoTo QueryInstanceErr

    ' Check for valid values of the instance id
    If InstanceId > 0 Then
        ' Find the run node with the matching step id
        For lngIndex = 0 To Count() - 1
            If mcInstances(lngIndex).InstanceId =
InstanceId Then
                Set QueryInstance =
mcInstances(lngIndex)
                Exit For
            End If
        Next lngIndex

        If lngIndex > mcInstances.Count - 1 Then
            On Error GoTo 0
            Err.Raise vbObjectError + errQueryFailed,
mstrSource, _
                    LoadResString(errQueryFailed)
        End If
    Else
        On Error GoTo 0
        Err.Raise vbObjectError + errQueryFailed,
mstrSource, _
                LoadResString(errQueryFailed)
    End If

    Exit Function

QueryInstanceErr:
    ' Log the error code raised by Visual Basic
```


© 2006 Hewlett-Packard Company. All rights reserved.

```
    Call LogErrors(Errors)
    On Error GoTo 0
    mstrSource = mstrModuleName & "QueryInstance"
    Err.Raise vbObjectError + errQueryFailed, _
            mstrSource, LoadResString(errQueryFailed)

End Function

Public Function QueryPendingInstance(ByVal
ParentInstanceId As Long, _
        ByVal lngSubStepId As Long) As cInstance
    ' Retrieves a pending instance for the passed in
substep
    ' and the given parent instance id.

    Dim lngIndex As Long

    On Error GoTo QueryPendingInstanceErr

    ' Find the run node with the matching step id
    For lngIndex = 0 To Count() - 1
        If mcInstances(lngIndex).ParentInstanceId =
ParentInstanceId And _
                mcInstances(lngIndex).Step.StepId =
lngSubStepId Then
            ' Put in a separate if condition since
the IsPending
            ' property is valid only for manager
steps. If the
            ' calling procedure does not pass a
manager step
            ' identifier, the procedure will error
out.
            If mcInstances(lngIndex).IsPending Then
                Set QueryPendingInstance =
mcInstances(lngIndex)
                Exit For
            End If
        End If
    Next lngIndex

    Exit Function

QueryPendingInstanceErr:
    ' Log the error code raised by Visual Basic
    Call LogErrors(Errors)
    On Error GoTo 0
    mstrSource = mstrModuleName &
"QueryPendingInstance"
    Err.Raise vbObjectError + errQueryFailed, _
            mstrSource, LoadResString(errQueryFailed)

End Function
Public Function InstanceAborted(cSubStepRec As
cSubStep) As Boolean

    Dim lIndex As Long

    InstanceAborted = False

    For lIndex = 0 To Count() - 1
        If mcInstances(lIndex).Step.StepId =
cSubStepRec.StepId And _
                mcInstances(lIndex).Status =
gintAborted Then
            InstanceAborted = True
            Exit For
        End If
    Next lIndex

End Function
Public Function
CompletedInstanceExists(lParentInstance As Long, _
        cSubStepDtls As cStep) As Boolean
    ' Checks if there is a completed instance of the
passed in step

    Dim lngIndex As Long

    CompletedInstanceExists = False

    If cSubStepDtls.StepType = gintManagerStep Then
        ' Find the run node with the matching step id
        For lngIndex = 0 To Count() - 1
            If mcInstances(lngIndex).ParentInstanceId
= lParentInstance And _
                    mcInstances(lngIndex).Step.StepId
= cSubStepDtls.StepId Then
                ' Put in a separate if condition
since the IsPending
                ' property is valid only for manager
steps.
                BugAssert (Not
mcInstances(lngIndex).IsPending), "Pending instance
exists!"

                CompletedInstanceExists = True
                Exit Function
            End If
        Next lngIndex
    End If

End Function
Public Sub Add(ByVal objItem As cInstance)

    mcInstances.Add objItem

End Sub


Public Sub Clear()

    mcInstances.Clear

End Sub


Public Function Count() As Long

    Count = mcInstances.Count

End Function


Public Function Delete(ByVal lngDelete As Long) As
cInstance

    Set Delete = mcInstances.Delete(lngDelete)

End Function


Public Property Set Item(Optional ByVal Position As
Long, _
        RHS As cInstance)

    If Position = -1 Then
        Position = 0
    End If
    Set mcInstances(Position) = RHS

End Property

Public Property Get Item(Optional ByVal Position As
Long = -1) _
        As cInstance
Attribute Item.VB_UserMemId = 0

    If Position = -1 Then
        Position = 0
    End If
    Set Item = mcInstances.Item(Position)

End Property

Private Sub Class_Initialize()

    Set mcInstances = New cVector

End Sub


Private Sub Class_Terminate()

    Set mcInstances = Nothing

End Sub
```

cIterator.cls

```
VERSION 1.0 CLASS
BEGIN
  MultiUse = -1  'True
END
Attribute VB_Name = "cIterator"
Attribute VB_GlobalNameSpace = False
Attribute VB_Creatable = True
Attribute VB_PredeclaredId = False
Attribute VB_Exposed = False
'  FILE:        cIterator.cls
'               Microsoft TPC-H Kit Ver. 1.00
'               Copyright Microsoft, 1999
'               All Rights Reserved
'
'
```


© 2006 Hewlett-Packard Company. All rights reserved.

```
'  PURPOSE:     Encapsulates the properties and
methods of an iterator.
'               Contains functions to insert, update
and delete
'               iterator_values records from the
database.
'  Contact:     Reshma Tharamal
(reshmat@microsoft.com)
'
Option Explicit

Implements cNode

' Module level variables to store the property values
Private mintType As Integer
Private mintSequenceNo As Integer
Private mstrValue As String
Private mdbsIteratorDB As Database
Private mintOperation As Integer
Private mlngPosition As Long

Private Const mstrModuleName As String = "cIterator."
Private mstrSource As String

Public Enum ValueType
    gintFrom = 1
    gintTo
    gintStep
    gintValue
End Enum
Public Property Get Value() As String

    Value = mstrValue

End Property
Public Property Let Value(ByVal vdata As String)

    mstrValue = vdata

End Property

Public Property Get IndOperation() As Operation

    IndOperation = mintOperation

End Property
Public Property Let IndOperation(ByVal vdata As
Operation)

    On Error GoTo IndOperationErr
    mstrSource = mstrModuleName & "IndOperation"

    ' The valid operations are define in the
cOperations
    ' class. Check if the operation is valid
    Select Case vdata
        Case QueryOp, InsertOp, UpdateOp, DeleteOp
            mintOperation = vdata

        Case Else
            On Error GoTo 0
            Err.Raise vbObjectError +
errInvalidOperation, _
                    mstrSource,
LoadResString(errInvalidOperation)
    End Select

    Exit Property

IndOperationErr:
    LogErrors Errors
    mstrSource = mstrModuleName & "IndOperation"
    On Error GoTo 0
    Err.Raise vbObjectError + errLetOperationFailed,
_
        mstrSource,
LoadResString(errLetOperationFailed)

End Property

Public Function Clone() As cIterator

    ' Creates a copy of a given Iterator

    Dim cItClone As cIterator

    On Error GoTo CloneErr

    Set cItClone = New cIterator

    ' Copy all the iterator properties to the newly
    ' created object
    cItClone.IteratorType = mintType
    cItClone.SequenceNo = mintSequenceNo
    cItClone.IndOperation = mintOperation
    cItClone.Value = mstrValue

    ' And set the return value to the newly created
Iterator
    Set Clone = cItClone

    Exit Function

CloneErr:
    LogErrors Errors
    mstrSource = mstrModuleName & "Clone"
    On Error GoTo 0
    Err.Raise vbObjectError + errCloneFailed, _
            mstrSource, LoadResString(errCloneFailed)

End Function
Public Property Get SequenceNo() As Integer

    SequenceNo = mintSequenceNo

End Property

Public Property Let SequenceNo(ByVal vdata As
Integer)
    mintSequenceNo = vdata
End Property

Public Sub Add(ByVal lngStepId As Long, _
        strVersion As String)
    ' Inserts a new iterator values record into the
database
    Dim strInsert As String
    Dim qy As DAO.QueryDef

    On Error GoTo AddIteratorErr

    ' First check if the database object is valid
    Call CheckDB

    ' Create a temporary querydef object
    strInsert = "insert into iterator_values " & _
            "( step_id, version_no, type, " & _
            " iterator_value, sequence_no ) " & _
            " values ( [st_id], [ver_no], [it_typ], "
& _
            " [it_val], [seq_no] )"
    Set qy =
mdbsIteratorDB.CreateQueryDef(gstrEmptyString,
strInsert)

    ' Call a procedure to execute the Querydef object
    Call AssignParameters(qy, lngStepId, strVersion)

    qy.Execute dbFailOnError
    qy.Close

    Exit Sub

AddIteratorErr:
    LogErrors Errors
    mstrSource = mstrModuleName & "AddIterator"
    On Error GoTo 0
    Err.Raise vbObjectError +
errInsertIteratorFailed, _
            mstrSource, _
            LoadResString(errInsertIteratorFailed)
End Sub

Private Sub AssignParameters(qyExec As DAO.QueryDef,
_
        ByVal lngStepId As Long, _
        strVersion As String)
    ' Assigns values to the parameters in the
querydef object
    ' The parameter names are cryptic to make them
different
    ' from the field names. When the parameter names
are
    ' the same as the field names, parameters in the
where
    ' clause do not get created.

    Dim prmParam As DAO.Parameter

    On Error GoTo AssignParametersErr
    mstrSource = mstrModuleName & "AssignParameters"

    For Each prmParam In qyExec.Parameters
        Select Case prmParam.Name
            Case "[st_id]"
                prmParam.Value = lngStepId

            Case "[ver_no]"
```


© 2006 Hewlett-Packard Company. All rights reserved.

```
                prmParam.Value = strVersion

            Case "[it_typ]"
                prmParam.Value = mintType

            Case "[it_val]"
                prmParam.Value = mstrValue

            Case "[seq_no]"
                prmParam.Value = mintSequenceNo

            Case Else
                ' Write the parameter name that is
faulty
                WriteError errInvalidParameter,
mstrSource, _
                        prmParam.Name
                On Error GoTo 0
                Err.Raise errInvalidParameter,
mstrSource, _

LoadResString(errInvalidParameter)
        End Select
    Next prmParam

    Exit Sub

AssignParametersErr:

    mstrSource = mstrModuleName & "AssignParameters"
    Call LogErrors(Errors)
    On Error GoTo 0
    Err.Raise vbObjectError +
errAssignParametersFailed, _
        mstrSource,
LoadResString(errAssignParametersFailed)

End Sub
Private Sub CheckDB()
    ' Check if the database object has been
initialized

    If mdbsIteratorDB Is Nothing Then
        ShowError errInvalidDB
        On Error GoTo 0
        Err.Raise vbObjectError + errInvalidDB, _
            mstrModuleName,
LoadResString(errInvalidDB)
    End If

End Sub

Public Sub Delete(ByVal lngStepId As Long, _
        strVersion As String)
    ' Deletes the step iterator record from the
database

    Dim strDelete As String
    Dim qy As DAO.QueryDef

    On Error GoTo DeleteIteratorErr
    mstrSource = mstrModuleName & "DeleteIterator"

    ' There can be multiple iterators for a step.
    ' However the values that an iterator for a step
can
    ' assume will be unique, meaning that a
combination of
    ' the iterator_id and value will be unique.
    strDelete = "delete from iterator_values " & _
            " where step_id = [st_id]" & _
            " and version_no = [ver_no]" & _
            " and iterator_value = [it_val] "
    Set qy =
mdbsIteratorDB.CreateQueryDef(gstrEmptyString,
strDelete)

    Call AssignParameters(qy, lngStepId, strVersion)
    qy.Execute dbFailOnError

    qy.Close

    Exit Sub

DeleteIteratorErr:
    LogErrors Errors
    mstrSource = mstrModuleName & "DeleteIterator"
    On Error GoTo 0
    Err.Raise vbObjectError +
errDeleteIteratorFailed, _
            mstrSource, _
            LoadResString(errDeleteIteratorFailed)
End Sub
Public Sub Update(ByVal lngStepId As Long, strVersion
As String)
    ' Updates the sequence no of the step iterator
record
    ' in the database

    Dim strUpdate As String
    Dim qy As QueryDef

    On Error GoTo UpdateErr

    ' First check if the database object is valid
    Call CheckDB

    If mintType = gintValue Then
        ' If the iterator is of type value, only the
sequence of the values can get updated
        strUpdate = "Update iterator_values " & _
                " set sequence_no = [seq_no] " & _
                " where step_id = [st_id]" & _
                " and version_no = [ver_no]" & _
                " and iterator_value = [it_val] "
    Else
        ' If the iterator is of type range, only the
values can get updated
        strUpdate = "Update iterator_values " & _
                " set iterator_value = [it_val] " & _
                " where step_id = [st_id]" & _
                " and version_no = [ver_no]" & _
                " and type = [it_typ] "
    End If

    Set qy =
mdbsIteratorDB.CreateQueryDef(gstrEmptyString,
strUpdate)

    ' Call a procedure to assign the parameter values
to the
    ' querydef object
    Call AssignParameters(qy, lngStepId, strVersion)
    qy.Execute dbFailOnError

    qy.Close

    Exit Sub

UpdateErr:
    LogErrors Errors
    mstrSource = mstrModuleName & "Update"
    On Error GoTo 0
    Err.Raise vbObjectError +
errUpdateConstraintFailed, _
            mstrSource, _
            LoadResString(errUpdateConstraintFailed)

End Sub
Public Property Set NodeDB(vdata As Database)

    Set mdbsIteratorDB = vdata

End Property

Public Property Get NodeDB() As Database

    Set NodeDB = mdbsIteratorDB

End Property
Public Property Get Position() As Long

    Position = mlngPosition

End Property
Public Property Let Position(ByVal vdata As Long)

    mlngPosition = vdata

End Property

Public Property Let IteratorType(ByVal vdata As
ValueType)

    On Error GoTo TypeErr
    mstrSource = mstrModuleName & "Type"

    ' These constants have been defined in the
enumeration,
    ' Type, which is exposed
    Select Case vdata
        Case gintFrom, gintTo, gintStep, gintValue
            mintType = vdata

        Case Else
            On Error GoTo 0
            Err.Raise vbObjectError + errTypeInvalid,
_
```


© 2006 Hewlett-Packard Company. All rights reserved.

```
                mstrSource,
LoadResString(errTypeInvalid)
    End Select

    Exit Property

TypeErr:
    LogErrors Errors
    mstrSource = mstrModuleName & "Type"
    On Error GoTo 0
    Err.Raise vbObjectError + errTypeInvalid, _
        mstrSource, LoadResString(errTypeInvalid)

End Property

Public Property Get IteratorType() As ValueType

    IteratorType = mintType

End Property
Public Sub Validate()

    ' No validations necessary for the iterator class

End Sub

Private Sub Class_Initialize()

    ' Initialize the operation indicator variable to
Query
    ' It will be modified later by the collection
class when
    ' inserts, updates or deletes are performed
    mintOperation = QueryOp

End Sub


Private Property Let cNode_IndOperation(ByVal vdata
As Operation)

    On Error GoTo IndOperationErr
    mstrSource = mstrModuleName & "IndOperation"

    ' The valid operations are define in the
cOperations
    ' class. Check if the operation is valid
    Select Case vdata
        Case QueryOp, InsertOp, UpdateOp, DeleteOp
            mintOperation = vdata

        Case Else
            On Error GoTo 0
            Err.Raise vbObjectError +
errInvalidOperation, _
                mstrSource,
LoadResString(errInvalidOperation)
    End Select

    Exit Property

IndOperationErr:
    LogErrors Errors
    mstrSource = mstrModuleName & "IndOperation"
    On Error GoTo 0
    Err.Raise vbObjectError + errLetOperationFailed,
_
        mstrSource,
LoadResString(errLetOperationFailed)

End Property

Private Property Get cNode_IndOperation() As
Operation

    IndOperation = mintOperation

End Property

Private Property Set cNode_NodeDB(RHS As
DAO.Database)

    Set mdbsIteratorDB = RHS

End Property

Private Property Get cNode_NodeDB() As DAO.Database

    Set cNode_NodeDB = mdbsIteratorDB

End Property


Private Property Let cNode_Position(ByVal vdata As
Long)

    mlngPosition = vdata

End Property


Private Property Get cNode_Position() As Long

    cNode_Position = mlngPosition

End Property


Private Sub cNode_Validate()

    ' No validations necessary for the iterator class

End Sub


Private Property Let cNode_Value(ByVal vdata As
String)

    mstrValue = vdata

End Property

Private Property Get cNode_Value() As String

    Value = mstrValue

End Property
```

cManager.cls

```
VERSION 1.0 CLASS
BEGIN
  MultiUse = -1  'True
END
Attribute VB_Name = "cManager"
Attribute VB_GlobalNameSpace = False
Attribute VB_Creatable = True
Attribute VB_PredeclaredId = False
Attribute VB_Exposed = False
'  FILE:        cManager.cls
'               Microsoft TPC-H Kit Ver. 1.00
'               Copyright Microsoft, 1999
'               All Rights Reserved
'
'
'  PURPOSE:     Encapsulates the properties and
methods of a manager step.
'               Implements the cStep class - carries
out initializations
'               and validations that are specific to
manager steps.
'  Contact:     Reshma Tharamal
(reshmat@microsoft.com)
'
Option Explicit

Implements cStep

' Object variable to keep the step reference in
Private mcStep As cStep

' Used to indicate the source module name when errors
' are raised by this class
Private mstrSource As String
Private Const mstrModuleName As String = "cManager."
Private Sub cStep_AddAllIterators()

    Call mcStep.AddAllIterators

End Sub

Private Property Let cStep_StartDir(ByVal RHS As
String)

    mcStep.StartDir = RHS

End Property

Private Property Get cStep_StartDir() As String

    cStep_StartDir = mcStep.StartDir

End Property
Private Sub cStep_Delete()

    Call mcStep.Delete

End Sub
```


© 2006 Hewlett-Packard Company. All rights reserved.

```
Private Property Set cStep_NodeDB(RHS As
DAO.Database)

    Set mcStep.NodeDB = RHS

End Property

Private Function cStep_IncVersionY() As String

    cStep_IncVersionY = mcStep.IncVersionY

End Function
Private Function cStep_IsNewVersion() As Boolean
    cStep_IsNewVersion = mcStep.IsNewVersion
End Function
Private Function cStep_OldVersionNo() As String
    cStep_OldVersionNo = mcStep.OldVersionNo
End Function

Private Function cStep_IncVersionX() As String

    cStep_IncVersionX = mcStep.IncVersionX

End Function
Private Sub cStep_UpdateIteratorVersion()

    Call mcStep.UpdateIteratorVersion

End Sub

Private Function cStep_IteratorCount() As Long

    cStep_IteratorCount = mcStep.IteratorCount

End Function

Private Sub cStep_UnloadIterators()

    Call mcStep.UnloadIterators

End Sub

Private Sub cStep_DeleteIterator(cItRecord As
cIterator)

    Call mcStep.DeleteIterator(cItRecord)

End Sub
Private Property Get cStep_IteratorName() As String

    cStep_IteratorName = mcStep.IteratorName

End Property
Private Property Let cStep_IteratorName(ByVal RHS As
String)

    mcStep.IteratorName = RHS

End Property

Private Sub cStep_SaveIterators()

    Call mcStep.SaveIterators

End Sub
Private Sub cStep_LoadIterator(cItRecord As
cIterator)

    Call mcStep.LoadIterator(cItRecord)

End Sub

Private Property Let cStep_Position(ByVal RHS As
Long)

    mcStep.Position = RHS

End Property
Private Sub cStep_InsertIterator(cItRecord As
cIterator)

    Call mcStep.InsertIterator(cItRecord)

End Sub
Private Function cStep_Iterators() As Variant

    cStep_Iterators = mcStep.Iterators

End Function
Private Sub cStep_ModifyIterator(cItRecord As
cIterator)

    Call mcStep.ModifyIterator(cItRecord)

End Sub
Private Sub cStep_RemoveIterator(cItRecord As
cIterator)

    Call mcStep.RemoveIterator(cItRecord)

End Sub
Private Sub cStep_UpdateIterator(cItRecord As
cIterator)

    Call mcStep.UpdateIterator(cItRecord)

End Sub
Private Sub cStep_AddIterator(cItRecord As cIterator)

    Call mcStep.AddIterator(cItRecord)

End Sub

Private Property Get cStep_Position() As Long

    cStep_Position = mcStep.Position

End Property

Private Function cStep_Clone(Optional cCloneStep As
cStep) As cStep

    Dim cNewManager As cManager

    Set cNewManager = New cManager

    Set cStep_Clone = mcStep.Clone(cNewManager)

End Function

Private Property Get cStep_IndOperation() As
Operation

    cStep_IndOperation = mcStep.IndOperation

End Property

Private Property Let cStep_IndOperation(ByVal RHS As
Operation)

    mcStep.IndOperation = RHS

End Property

Private Property Get cStep_NextStepId() As Long

    cStep_NextStepId = mcStep.NextStepId

End Property

Private Property Let cStep_OutputFile(ByVal RHS As
String)

    mcStep.OutputFile = RHS

End Property

Private Property Get cStep_OutputFile() As String

    cStep_OutputFile = mcStep.OutputFile

End Property

Private Property Let cStep_ErrorFile(ByVal RHS As
String)

    mcStep.ErrorFile = RHS

End Property

Private Property Get cStep_ErrorFile() As String

    cStep_ErrorFile = mcStep.ErrorFile

End Property
'Private Property Let cStep_LogFile(ByVal RHS As
String)
'
'    mcStep.LogFile = RHS
'
'End Property
'
'Private Property Get cStep_LogFile() As String
'
'    cStep_LogFile = mcStep.LogFile
'
'End Property
```


© 2006 Hewlett-Packard Company. All rights reserved.

```
Private Property Let cStep_ArchivedFlag(ByVal RHS As
Boolean)

    mcStep.ArchivedFlag = RHS

End Property

Private Property Get cStep_ArchivedFlag() As Boolean

    cStep_ArchivedFlag = mcStep.ArchivedFlag

End Property

Private Property Get cStep_NodeDB() As DAO.Database

    Set cStep_NodeDB = mcStep.NodeDB

End Property

Private Sub Class_Initialize()

    ' Create the object
    Set mcStep = New cStep

    ' Initialize the object with valid values for a
manager step
    ' The global flag should be the first field to be
initialized
    ' since subsequent validations might try to check
if the
    ' step being created is global
    mcStep.GlobalFlag = False
'    mcStep.GlobalRunMethod = gintNoOption
    mcStep.StepType = gintManagerStep

    ' Since the manager step does not take any
action, the step
    ' text and file name will always be empty
    mcStep.StepText = gstrEmptyString
    mcStep.StepTextFile = gstrEmptyString

    ' Since the manager step does not take any
action, execution
    ' properties for the step will be empty
    mcStep.ExecutionMechanism = gintNoOption
    mcStep.FailureDetails = gstrEmptyString
    mcStep.ContinuationCriteria = gintNoOption

End Sub
Private Sub Class_Terminate()

    ' Remove the step object
    Set mcStep = Nothing

End Sub
Private Sub cStep_Add()

    ' Call the Add method of the step class to carry
out the insert
    mcStep.Add

End Sub

Private Property Get cStep_ContinuationCriteria() As
ContinuationCriteria

    cStep_ContinuationCriteria =
mcStep.ContinuationCriteria

End Property

Private Property Let cStep_ContinuationCriteria(ByVal
RHS As ContinuationCriteria)

    ' Since a manager step cannot take any action,
the continuation
    ' criteria property does not apply to it
    mcStep.ContinuationCriteria = gintNoOption

End Property

Private Property Let cStep_DegreeParallelism(ByVal
RHS As String)

    mcStep.DegreeParallelism = RHS

End Property

Private Property Get cStep_DegreeParallelism() As
String

    cStep_DegreeParallelism =
mcStep.DegreeParallelism

End Property

Private Sub cStep_DeleteStep()

    On Error GoTo cStep_DeleteStepErr
    mstrSource = mstrModuleName & "cStep_DeleteStep"

    mcStep.Delete
    Exit Sub

cStep_DeleteStepErr:
    LogErrors Errors
    mstrSource = mstrModuleName & "cStep_DeleteStep"
    On Error GoTo 0
    Err.Raise vbObjectError + errDeleteStepFailed, _
            mstrSource, _
            LoadResString(errDeleteStepFailed)

End Sub

Private Property Get cStep_EnabledFlag() As Boolean

    cStep_EnabledFlag = mcStep.EnabledFlag

End Property

Private Property Let cStep_EnabledFlag(ByVal RHS As
Boolean)

    mcStep.EnabledFlag = RHS

End Property

Private Property Let cStep_ExecutionMechanism(ByVal
RHS As ExecutionMethod)

    ' Since a manager step cannot take any action,
the Execution
    ' Mechanism property does not apply to it
    mcStep.ExecutionMechanism = gintNoOption

End Property

Private Property Get cStep_ExecutionMechanism() As
ExecutionMethod

    cStep_ExecutionMechanism =
mcStep.ExecutionMechanism

End Property

Private Property Let cStep_FailureDetails(ByVal RHS
As String)

    ' Since a manager step cannot take any action,
the Failure
    ' Details property does not apply to it
    mcStep.FailureDetails = gstrEmptyString

End Property

Private Property Get cStep_FailureDetails() As String

    cStep_FailureDetails = mcStep.FailureDetails

End Property

Private Property Get cStep_GlobalFlag() As Boolean

    cStep_GlobalFlag = mcStep.GlobalFlag

End Property

Private Property Let cStep_GlobalFlag(ByVal RHS As
Boolean)

    ' Set the global flag to false - this flag is
initialized when
    ' an instance of the class is created. Just
making sure that
    ' nobody changes the value inadvertently
    mcStep.GlobalFlag = False

End Property
Private Sub cStep_Modify()

    ' Call the Modify method of the step class to
carry out the update
    mcStep.Modify

End Sub

Private Property Let cStep_ParentStepId(ByVal RHS As
Long)
```


© 2006 Hewlett-Packard Company. All rights reserved.

```
    mcStep.ParentStepId = RHS

End Property

Private Property Get cStep_ParentStepId() As Long

    cStep_ParentStepId = mcStep.ParentStepId

End Property

Private Property Let cStep_ParentVersionNo(ByVal RHS
As String)

    mcStep.ParentVersionNo = RHS

End Property

Private Property Get cStep_ParentVersionNo() As
String

    cStep_ParentVersionNo = mcStep.ParentVersionNo

End Property

Private Property Let cStep_SequenceNo(ByVal RHS As
Integer)

    mcStep.SequenceNo = RHS

End Property

Private Property Get cStep_SequenceNo() As Integer

    cStep_SequenceNo = mcStep.SequenceNo

End Property

Private Property Let cStep_StepId(ByVal RHS As Long)

    mcStep.StepId = RHS

End Property

Private Property Get cStep_StepId() As Long

    cStep_StepId = mcStep.StepId

End Property


Private Property Let cStep_StepLabel(ByVal RHS As
String)

    mcStep.StepLabel = RHS

End Property

Private Property Get cStep_StepLabel() As String

    cStep_StepLabel = mcStep.StepLabel

End Property


Private Property Let cStep_StepLevel(ByVal RHS As
Integer)

    mcStep.StepLevel = RHS

End Property

Private Property Get cStep_StepLevel() As Integer

    cStep_StepLevel = mcStep.StepLevel

End Property

Private Property Let cStep_StepText(ByVal RHS As
String)

    ' Since the manager step does not take any
action, the step
    ' text and file name will always be empty
    mcStep.StepText = gstrEmptyString

End Property

Private Property Get cStep_StepText() As String

    cStep_StepText = mcStep.StepText

End Property

Private Property Let cStep_StepTextFile(ByVal RHS As
String)

    ' Since the manager step does not take any
action, the step
    ' text and file name will always be empty
    mcStep.StepTextFile = gstrEmptyString

End Property

Private Property Get cStep_StepTextFile() As String

    cStep_StepTextFile = mcStep.StepTextFile

End Property

Private Property Let cStep_StepType(RHS As
gintStepType)

    mcStep.StepType = gintManagerStep

End Property

Private Property Get cStep_StepType() As gintStepType

    cStep_StepType = mcStep.StepType

End Property

Private Sub cStep_Validate()
    ' The validate routines for each of the steps
will
    ' carry out the specific validations for the type
and
    ' call the generic validation routine

    On Error GoTo cStep_ValidateErr
    mstrSource = mstrModuleName & "cStep_Validate"

    ' Validations specific to manager steps

    ' Check if the step text or a file name has been
    ' specified
    If Not StringEmpty(mcStep.StepText) Or Not
StringEmpty(mcStep.StepTextFile) Then
        ShowError errTextAndFileNullForManager
        On Error GoTo 0
        Err.Raise vbObjectError + errValidateFailed,
_
                gstrSource, _
                LoadResString(errValidateFailed)
    End If

    If mcStep.ExecutionMechanism <> gintNoOption Then
        ShowError errExecutionMechanismInvalid
        On Error GoTo 0
        Err.Raise vbObjectError + errValidateFailed,
_
                gstrSource, _
                LoadResString(errValidateFailed)
    End If

    If mcStep.FailureDetails <> gstrEmptyString Then
        ShowError errFailureDetailsNullForMgr
        On Error GoTo 0
        Err.Raise vbObjectError + errValidateFailed,
_
                gstrSource, _
                LoadResString(errValidateFailed)
    End If

    If mcStep.ContinuationCriteria <> gintNoOption
Then
        ShowError errContCriteriaInvalid
        On Error GoTo 0
        Err.Raise vbObjectError + errValidateFailed,
_
                gstrSource, _
                LoadResString(errValidateFailed)
    End If

    mcStep.Validate

    Exit Sub

cStep_ValidateErr:
    LogErrors Errors
    mstrSource = mstrModuleName & "cStep_Validate"
    On Error GoTo 0
    Err.Raise vbObjectError + errValidateFailed, _
            mstrSource, _
            LoadResString(errValidateFailed)
End Sub
```


© 2006 Hewlett-Packard Company. All rights reserved.

```
Private Property Let cStep_VersionNo(ByVal RHS As
String)

    mcStep.VersionNo = RHS

End Property

Private Property Get cStep_VersionNo() As String

    cStep_VersionNo = mcStep.VersionNo

End Property

Private Property Let cStep_WorkspaceId(ByVal RHS As
Long)

    mcStep.WorkspaceId = RHS

End Property

Private Property Get cStep_WorkspaceId() As Long

    cStep_WorkspaceId = mcStep.WorkspaceId

End Property
```

cNode.cls

```
VERSION 1.0 CLASS
BEGIN
  MultiUse = -1  'True
END
Attribute VB_Name = "cNode"
Attribute VB_GlobalNameSpace = False
Attribute VB_Creatable = True
Attribute VB_PredeclaredId = False
Attribute VB_Exposed = False
'  FILE:        cNode.cls
'               Microsoft TPC-H Kit Ver. 1.00
'               Copyright Microsoft, 1999
'               All Rights Reserved
'
'
'  PURPOSE:     Defines the properties that an object
has to implement.
'  Contact:     Reshma Tharamal
(reshmat@microsoft.com)
'
Option Explicit

Public Property Get IndOperation() As Operation
End Property
Public Property Let IndOperation(ByVal vdata As
Operation)
End Property
Public Sub Validate()
End Sub
Public Property Get Value() As String
End Property
Public Property Let Value(ByVal vdata As String)
End Property
Public Property Get NodeDB() As Database
End Property
Public Property Set NodeDB(vdata As Database)
End Property

Public Property Get Position() As Long
End Property
Public Property Let Position(ByVal vdata As Long)
End Property
```

cNodeCollections.cls

```
VERSION 1.0 CLASS
BEGIN
  MultiUse = -1  'True
END
Attribute VB_Name = "cNodeCollections"
Attribute VB_GlobalNameSpace = False
Attribute VB_Creatable = True
Attribute VB_PredeclaredId = False
Attribute VB_Exposed = False
'  FILE:       cNodeCollections.cls
'              Microsoft TPC-H Kit Ver. 1.00
'              Copyright Microsoft, 1999
'              All Rights Reserved
'
'
'  PURPOSE:    Implements an array of objects.
'  Contact:    Reshma Tharamal
(reshmat@microsoft.com)
'
Option Explicit

' Node counter
Private mlngNodeCount As Long
Private mdbsNodeDb As Database
Private mcarrNodes() As Object

' Used to indicate the source module name when errors
' are raised by this class
Private mstrSource As String
Private Const mstrModuleName As String =
"cNodeCollections."

Public Property Set Item(ByVal Position As Long, _
        ByVal objNode As Object)

    ' Returns the element at the passed in position
in the array
    If Position >= 0 And Position < mlngNodeCount
Then
        Set mcarrNodes(Position) = objNode
    Else
        On Error GoTo 0
        Err.Raise vbObjectError +
errItemDoesNotExist, mstrSource, _
            LoadResString(errItemDoesNotExist)
    End If
End Property
Public Property Get Item(ByVal Position As Long) As
Object
Attribute Item.VB_UserMemId = 0

    ' Returns the element at the passed in position
in the array
    If Position >= 0 And Position < mlngNodeCount
Then
        Set Item = mcarrNodes(Position)
    Else
        On Error GoTo 0
        Err.Raise vbObjectError +
errItemDoesNotExist, mstrSource, _
            LoadResString(errItemDoesNotExist)
    End If

End Property

Public Sub Commit(ByVal cSaveObj As Object, _
        ByVal lngIndex As Long)
    ' This procedure checks if any changes have been
made to the
    ' passed in object. If so, it calls the
corresponding method
    ' to commit the changes.

    On Error GoTo CommitErr
    mstrSource = mstrModuleName & "Commit"

    Select Case cSaveObj.IndOperation
        Case QueryOp
            ' No changes were made to the queried
parameter.
            ' Do nothing

        Case InsertOp
            cSaveObj.Add
            cSaveObj.IndOperation = QueryOp

        Case UpdateOp
            cSaveObj.Modify
            cSaveObj.IndOperation = QueryOp

        Case DeleteOp
            cSaveObj.Delete
            ' Now we can remove the record from the
array
            Call Unload(lngIndex)

    End Select

    Exit Sub

CommitErr:
    LogErrors Errors
    mstrSource = mstrModuleName & "Commit"
    On Error GoTo 0
    Err.Raise vbObjectError + errCommitFailed, _
            mstrSource, _
            LoadResString(errCommitFailed)
```


© 2006 Hewlett-Packard Company. All rights reserved.

```
End Sub
Public Sub Save(ByVal lngWorkspace As Long)
    ' Calls a procedure to commit all changes for the
passed
    ' in workspace.

    Dim lngIndex As Long

    On Error GoTo SaveErr

    ' Find all parameters in the array with a
matching workspace id
    ' It is important to step backwards through the
array, since
    ' we delete parameter records as we go along!
    For lngIndex = mlngNodeCount - 1 To 0 Step -1
        If mcarrNodes(lngIndex).WorkspaceId =
lngWorkspace Then

            ' Call a procedure to commit all changes
to the
            ' parameter record, if any
            Call Commit(mcarrNodes(lngIndex),
lngIndex)

        End If
    Next lngIndex

    Exit Sub

SaveErr:
    LogErrors Errors
    mstrSource = mstrModuleName & "Save"
    On Error GoTo 0
    Err.Raise vbObjectError + errSaveFailed, _
            mstrSource, _
            LoadResString(errSaveFailed)

End Sub
Public Property Get Count() As Long

    Count = mlngNodeCount

End Property

Public Property Get NodeDB() As Database

    Set NodeDB = mdbsNodeDb

End Property
Public Property Set NodeDB(vdata As Database)

    Set mdbsNodeDb = vdata

End Property

Public Sub Load(cNodeToLoad As Object)
    ' Adds the passed in object to the array

    On Error GoTo LoadErr

    ' If this procedure is called by the add to array
procedure,
    ' the database object has already been
initialized
    If cNodeToLoad.NodeDB Is Nothing Then

        ' All the Nodes will be initialized with the
database
        ' objects before being added to the array
        Set cNodeToLoad.NodeDB = mdbsNodeDb

    End If

    ReDim Preserve mcarrNodes(mlngNodeCount)

    ' Set the newly added element in the array to the
passed in Node
    cNodeToLoad.Position = mlngNodeCount
    Set mcarrNodes(mlngNodeCount) = cNodeToLoad

    mlngNodeCount = mlngNodeCount + 1

    Exit Sub

LoadErr:
    LogErrors Errors
    On Error GoTo 0
    Err.Raise vbObjectError + errLoadFailed,
mstrModuleName & "Load", _
            LoadResString(errLoadFailed)

End Sub
Public Sub Unload(lngDeletePosition As Long)
    ' Unloads the passed in object from the array

    On Error GoTo UnloadErr

    If lngDeletePosition < (mlngNodeCount - 1) Then

        ' Set the Node at the position being deleted
to
        ' the last Node in the Node array
        Set mcarrNodes(lngDeletePosition) =
mcarrNodes(mlngNodeCount - 1)
        mcarrNodes(lngDeletePosition).Position =
lngDeletePosition
    End If

    ' Delete the last Node from the array
    mlngNodeCount = mlngNodeCount - 1
    If mlngNodeCount > 0 Then
        ReDim Preserve mcarrNodes(0 To mlngNodeCount
- 1)
    Else
        ReDim mcarrNodes(0)
    End If

    Exit Sub

UnloadErr:
    LogErrors Errors
    mstrSource = mstrModuleName & "Unload"
    On Error GoTo 0
    Err.Raise vbObjectError + errUnloadFailed, _
            mstrSource, _
            LoadResString(errUnloadFailed)

End Sub
Public Sub Delete(lngDeletePosition As Long)
    ' Deletes the object at the specified position in
the
    ' array

    Dim cDeleteObj As Object

    On Error GoTo DeleteErr
    mstrSource = mstrModuleName & "Delete"

    Set cDeleteObj = mcarrNodes(lngDeletePosition)

    If cDeleteObj.IndOperation = InsertOp Then
        ' If we are deleting a record that has just
been inserted,
        ' blow it away
        Call Unload(lngDeletePosition)
    Else
        ' Set the operation for the deleted object to
indicate a
        ' delete - we actually delete the element
only at the time
        ' of a save operation
        cDeleteObj.IndOperation = DeleteOp
    End If

    Exit Sub

DeleteErr:
    LogErrors Errors
    mstrSource = mstrModuleName & "Delete"
    On Error GoTo 0
    Err.Raise vbObjectError + errDeleteFailed, _
            mstrSource, _
            LoadResString(errDeleteFailed)

End Sub
Public Sub Modify(cModifiedNode As Object)
    ' Sets the object at the passed in position to
the
    ' modified object passed in

    On Error GoTo ModifyErr

    ' First check if the record is valid - all
objects that
    ' use this collection class must have a Validate
routine
    cModifiedNode.Validate

    ' If we are updating a record that hasn't yet
been inserted,
    ' do not change the operation indicator - or we
try to update
    ' a non-existant record
    If cModifiedNode.IndOperation <> InsertOp Then
        ' Set the operations to indicate an update
        cModifiedNode.IndOperation = UpdateOp
    End If
```


© 2006 Hewlett-Packard Company. All rights reserved.

```
    ' Modify the object at the queried position - the
Position
    ' will be maintained by this class
    Set mcarrNodes(cModifiedNode.Position) =
cModifiedNode

    Exit Sub

ModifyErr:
    LogErrors Errors
    mstrSource = mstrModuleName & "Modify"
    On Error GoTo 0
    Err.Raise vbObjectError + errModifyFailed, _
            mstrSource, _
            LoadResString(errModifyFailed)

End Sub
Public Sub Add(cNodeToAdd As Object)

    On Error GoTo AddErr

    Set cNodeToAdd.NodeDB = mdbsNodeDb

    ' First check if the record is valid
    cNodeToAdd.Validate

    ' Set the operation to indicate an insert
    cNodeToAdd.IndOperation = InsertOp

    ' Call a procedure to load the record in the
array
    Call Load(cNodeToAdd)

    Exit Sub

AddErr:
    LogErrors Errors
    mstrSource = mstrModuleName & "Add"
    On Error GoTo 0
    Err.Raise vbObjectError + errAddFailed, _
            mstrSource, _
            LoadResString(errAddFailed)

End Sub

Private Sub Class_Terminate()

    ReDim mcarrNodes(0)
    mlngNodeCount = 0

End Sub
```

Common.bas

```
Attribute VB_Name = "Common"
'  FILE:       Common.bas
'              Microsoft TPC-H Kit Ver. 1.00
'              Copyright Microsoft, 1999
'              All Rights Reserved
'
'
'  PURPOSE:    Module containing common functionality
throughout
'              StepMaster
'  Contact:    Reshma Tharamal
(reshmat@microsoft.com)
'
Option Explicit

Private Const mstrModuleName As String = "Common."

' Used to separate the variable data from the
constant error
' message being raised when a context-sensitive error
is displayed
Private Const mintDelimiter As String = " : "
Private Const mstrFormatString = "mmddyy"

' Identifiers for the different labels that need to
be loaded
' into the tree view for each workspace
Public Const mstrWorkspacePrefix = "W"
Public Const mstrParameterPrefix = "P"
Public Const mstrParamConnectionPrefix = "C"
Public Const mstrConnectionDtlPrefix = "N"
Public Const mstrParamExtensionPrefix = "E"
Public Const mstrParamBuiltInPrefix = "B"
Public Const gstrGlobalStepPrefix = "G"
Public Const gstrManagerStepPrefix = "M"
Public Const gstrWorkerStepPrefix = "S"
Public Const gstrDummyPrefix = "D"
Public Const mstrLabelPrefix = "L"
Public Const mstrInstancePrefix = "I"
Public Function LabelStep(lngWorkspaceIdentifier As
Long) As String
    ' Returns the step label for the workspace
identifier passed in
    ' Basically this is a wrapper around the
MakeKeyValid function

    LabelStep = MakeKeyValid(gintStepLabel,
gintStepLabel, lngWorkspaceIdentifier)

End Function


Public Function JulianDateToString(dt64Bit As
Currency) As String

    Dim lYear As Long
    Dim lMonth As Long
    Dim lDay As Long
    Dim lHour As Long
    Dim lMin As Long
    Dim lSec As Long
    Dim lMs As Long

    Call JulianToTime(dt64Bit, lYear, lMonth, lDay,
lHour, lMin, lSec, lMs)
    JulianDateToString = Format$(lYear, gsYearFormat)
& gsDateSeparator & _
            Format$(lMonth, gsDtFormat) &
gsDateSeparator & _
            Format$(lDay, gsDtFormat) & gstrBlank & _
            Format$(lHour, gsTmFormat) &
gsTimeSeparator & _
            Format$(lMin, gsTmFormat) &
gsTimeSeparator & _
            Format$(lSec, gsTmFormat) & gsMsSeparator
& _
            Format$(lMs, gsMSecondFormat)

End Function
Public Sub DeleteFile(strFile As String, Optional
ByVal bCheckIfEmpty As Boolean = False)

    ' Ensure that there is only a single file of the
name before delete, since
    ' Kill supports wildcards and can potentially
delete a number of files
    Dim strTemp As String

    If CheckFileExists(strFile) Then
        If bCheckIfEmpty Then
            If FileLen(strFile) = 0 Then
                Kill strFile
            End If
        Else
            Kill strFile
        End If
    End If

End Sub
Public Function CheckFileExists(strFile As String) As
Boolean

    ' Returns true if the passed in file exists
    ' Raises an error if multiple files are found
(filename contains a wildcard)
    CheckFileExists = False

    If Not StringEmpty(Dir(strFile)) Then
        If Not StringEmpty(Dir()) Then
            On Error GoTo 0
            Err.Raise vbObjectError +
errDeleteSingleFile, _
                mstrModuleName & "DeleteFile",
LoadResString(errDeleteSingleFile)
        End If

        CheckFileExists = True
    End If

End Function

Public Function GetVersionString() As String
GetVersionString = "Version " & gsVersion
End Function

Function IsLabel(strKey As String) As Boolean

    ' The tree view control on frmMain can contain
two types of
    ' nodes -
    ' 1. Nodes that contain data for the workspace -
this could
```


© 2006 Hewlett-Packard Company. All rights reserved.

```
    ' be data for the different types of steps or
parameters
    ' 2. Nodes that display static data - these kind
of nodes
    ' are referred to as label nodes e.g. "Global
Steps" is a
    ' label node
    ' This function returns True if the passed in key
corresponds
    ' to a label node

    IsLabel = InStr(strKey, mstrLabelPrefix) > 0

End Function

Function MakeKeyValid(lngIdentifier As Long, _
    intTypeOfNode As Integer, _
    Optional ByVal WorkspaceId As Long = 0, _
    Optional ByVal InstanceId As Long = 0) As String

    ' We use a numbering scheme while loading the
tree view with
    ' all node data, since it needs a unique key and
we want to
    ' use the key to identify the data it contains.
    ' Moreover, add a character to the beginning of
the identifier
    ' so that the tree view control accepts it as a
valid string,
    ' viz. "456" doesn't work, so change it to "W456"
    ' The general scheme is to concatenate a Label
with the Identifier
    ' e.g A Global Step Node will have the Label, G
and the Step Id
    ' concatenated to form the unique key
    ' The list of all such node types is given below
    ' 1. "W" + Workspace_Id for Workspace nodes
    ' 2. "P" + Parameter_Id for Parameter nodes
    ' 3. "M" + Step_Id for Manager Step nodes
    ' 4. "S" + Step_Id for Worker Step nodes
    ' 5. "G" + Step_Id for Global Step nodes
    ' 6. Instance_id + "I" + Step_Id for Instance
nodes
    ' 7. Workspace_id + "L" + the label identifier =
node type for all Label nodes
    ' Since the manager, worker and global steps are
stored in the
    ' same table and the step identifiers will always
be unique, we
    ' can use the same character as the prefix, but
this is a
    ' convenient way to know the type of step being
processed.
    ' The workspace id is appended to the label
identifier to make
    ' it unique, since multiple workspaces may be
open during a session
    ' Strip the prefix characters off while saving
the Ids to the db

    Dim strPrefixChar As String

    On Error GoTo MakeKeyValidErr

    gstrSource = mstrModuleName & "MakeKeyValid"

    Select Case intTypeOfNode
        Case gintWorkspace
            strPrefixChar = mstrWorkspacePrefix
        Case gintGlobalStep
            strPrefixChar = gstrGlobalStepPrefix
        Case gintManagerStep
            strPrefixChar = gstrManagerStepPrefix
        Case gintWorkerStep
            strPrefixChar = gstrWorkerStepPrefix
        Case gintRunManager, gintRunWorker
            If InstanceId = 0 Then
                On Error GoTo 0
                Err.Raise vbObjectError +
errMandatoryParameterMissing, _
                    gstrSource, _

LoadResString(errMandatoryParameterMissing)
            End If
            ' Concatenate the instance identifier and
the step
            ' identifier to form a unique key
            strPrefixChar = Trim$(Str$(InstanceId)) &
mstrInstancePrefix
        Case gintParameter
            strPrefixChar = mstrParameterPrefix
        Case gintNodeParamConnection
            strPrefixChar = mstrParamConnectionPrefix
        Case gintConnectionDtl
            strPrefixChar = mstrConnectionDtlPrefix
        Case gintNodeParamExtension
            strPrefixChar = mstrParamExtensionPrefix
        Case gintNodeParamBuiltIn
            strPrefixChar = mstrParamBuiltInPrefix
        Case gintGlobalsLabel, gintParameterLabel,
gintParamConnectionLabel, _
                gintConnDtlLabel, _
                gintParamExtensionLabel,
gintParamBuiltInLabel, gintGlobalStepLabel, _
                gintStepLabel
            If WorkspaceId = 0 Then
                ' The Workspace Id has to be
specified for a label node
                ' Otherwise it will not be possible
to generate unique label
                ' identifiers if multiple workspaces
are open
                On Error GoTo 0
                Err.Raise vbObjectError +
errWorkspaceIdMandatory, _
                    gstrSource, _

LoadResString(errWorkspaceIdMandatory)
            End If
            ' For all labels, the workspace
identifier and the
            ' label prefix are concatenated to form
the key
            strPrefixChar = Trim$(Str$(WorkspaceId))
& mstrLabelPrefix
        Case Else
                On Error GoTo 0
                Err.Raise vbObjectError +
errInvalidNodeType, _
                    gstrSource, _
                    LoadResString(errInvalidNodeType)
    End Select

    MakeKeyValid = strPrefixChar &
Trim$(Str$(lngIdentifier))

    Exit Function

MakeKeyValidErr:
    Call LogErrors(Errors)
    On Error GoTo 0
    Err.Raise vbObjectError + errMakeKeyValidFailed,
_
            gstrSource, _
            LoadResString(errMakeKeyValidFailed)

End Function

Function MakeIdentifierValid(strKey As String) As
Long

    ' Returns the Identifier corresponding to the
passed in key
    ' (Reverse of what was done in MakeKeyValid)

    On Error GoTo MakeIdentifierValidErr

    If IsLabel(strKey) Then
        ' If the key corresponds to a label node, the
identifier
        ' appears to the right of the label prefix
        MakeIdentifierValid = Val(Mid(strKey,
InStr(strKey, mstrLabelPrefix) + 1))
    ElseIf InStr(strKey, mstrInstancePrefix) = 0 Then
        ' For all other nodes, stripping the first
character off
        ' returns a valid Id
        MakeIdentifierValid = Val(Mid(strKey, 2))
    Else
        ' Instance node - strip of all characters
till the
        ' instance prefix
        MakeIdentifierValid = Val(Mid(strKey,
InStr(strKey, mstrInstancePrefix) + 1))
    End If

    Exit Function

MakeIdentifierValidErr:
    Call LogErrors(Errors)
    On Error GoTo 0
    Err.Raise vbObjectError +
errMakeIdentifierValidFailed, _
            mstrModuleName & "MakeIdentifierValid", _

LoadResString(errMakeIdentifierValidFailed)

End Function
Public Function IsInstanceNode(strNodeKey As String)
As Boolean
```


© 2006 Hewlett-Packard Company. All rights reserved.

```
    ' Returns true if the passed in node key
corresponds to a step instance
    IsInstanceNode = InStr(strNodeKey,
mstrInstancePrefix) > 0

End Function
Public Function IsBuiltInLabel(strNodeKey As String)
As Boolean

    ' Returns true if the passed in node key
corresponds to a step instance
    IsBuiltInLabel = (IsLabel(strNodeKey) And _
        (MakeIdentifierValid(strNodeKey) =
gintParamBuiltInLabel))

End Function

Public Sub ShowBusy()
    ' Modifies the mousepointer to indicate that the
    ' application is busy

    On Error Resume Next

    Screen.MousePointer = vbHourglass

End Sub
Public Sub ShowFree()
    ' Modifies the mousepointer to indicate that the
    ' application has finished processing and is
ready
    ' to accept user input

    On Error Resume Next

    Screen.MousePointer = vbDefault

End Sub

Public Function InstrR(strMain As String, _
        strSearch As String) As Integer
    ' Finds the last occurrence of the passed in
string

    Dim intPos As Integer
    Dim intPrev As Integer

    On Error GoTo InstrRErr

    intPrev = intPos
    intPos = InStr(1, strMain, strSearch)

    Do While intPos > 0
        intPrev = intPos
        intPos = InStr(intPos + 1, strMain,
strSearch)
    Loop
    InstrR = intPrev

    Exit Function

InstrRErr:
    Call LogErrors(Errors)
    gstrSource = mstrModuleName & "InstrR"
    On Error GoTo 0
    Err.Raise vbObjectError + errInstrRFailed, _
        gstrSource, _
        LoadResString(errInstrRFailed)

End Function

Public Function GetDefaultDir(lWspId As Long,
WspParameters As cArrParameters) As String

    Dim sDir As String
    sDir = SubstituteParameters( _
            gstrEnvVarSeparator & PARAM_DEFAULT_DIR &
gstrEnvVarSeparator, _
            lWspId, WspParameters:=WspParameters)
    MakePathValid (sDir & gstrFileSeparator &
"a.txt")
    GetDefaultDir = GetShortName(sDir)
    If StringEmpty(GetDefaultDir) Then
        GetDefaultDir = App.Path
    End If

End Function

Public Sub AddArrayElement(ByRef arrNodes() As
Object, _
        ByVal objToAdd As Object, _
        ByRef lngCount As Long)
    ' Adds the passed in object to the array

    On Error GoTo AddArrayElementErr

    ' Increase the array dimension and add the object
to it
    ReDim Preserve arrNodes(lngCount)
    Set arrNodes(lngCount) = objToAdd
    lngCount = lngCount + 1

    Exit Sub

AddArrayElementErr:
    LogErrors Errors
    gstrSource = mstrModuleName & "AddArrayElement"
    On Error GoTo 0
    Err.Raise vbObjectError +
errAddArrayElementFailed, _
            gstrSource, _
            LoadResString(errAddArrayElementFailed)

End Sub


Public Function CheckForNullField(rstRecords As
Recordset, strFieldName As String) As String

    ' Returns an empty string if a given field is
null
    On Error GoTo CheckForNullFieldErr

    If IsNull(rstRecords.Fields(strFieldName)) Then
        CheckForNullField = gstrEmptyString
    Else
        CheckForNullField =
rstRecords.Fields(strFieldName)
    End If
    Exit Function

CheckForNullFieldErr:
    Call LogErrors(Errors)
    On Error GoTo 0
    Err.Raise vbObjectError +
errCheckForNullFieldFailed, _
            mstrModuleName & "CheckForNullField", _
            LoadResString(errCheckForNullFieldFailed)

End Function

Public Function ErrorOnNullField(rstRecords As
Recordset, strFieldName As String) As Variant

    ' If a given field is null, raises an error
    ' Else, returns the field value in a variant
    ' The calling function must convert the return
value to the
    ' appropriate type
    On Error GoTo ErrorOnNullFieldErr
    gstrSource = mstrModuleName & "ErrorOnNullField"

    If IsNull(rstRecords.Fields(strFieldName)) Then
        On Error GoTo 0
        Err.Raise vbObjectError +
errMandatoryFieldNull, _
            gstrSource, _
            strFieldName & mintDelimiter &
LoadResString(errMandatoryFieldNull)
    Else
        ErrorOnNullField =
rstRecords.Fields(strFieldName)
    End If
    Exit Function

ErrorOnNullFieldErr:
    Call LogErrors(Errors)
    On Error GoTo 0
    Err.Raise vbObjectError + errUnableToCheckNull, _
        gstrSource, _
        strFieldName & mintDelimiter &
LoadResString(errUnableToCheckNull)

End Function
Public Function StringEmpty(strCheckString As String)
As Boolean

    StringEmpty = (strCheckString = gstrEmptyString)

End Function
Public Function GetIteratorValue(cStepIterators As
cRunColIt, _
        ByVal strItName As String)

    Dim lngIndex As Long
    Dim strValue As String

    On Error GoTo GetIteratorValueErr
    gstrSource = mstrModuleName & "GetIteratorValue"
```


© 2006 Hewlett-Packard Company. All rights reserved.

```
    ' Find the iterator in the Iterators collection
    For lngIndex = 0 To cStepIterators.Count - 1
        If cStepIterators(lngIndex).IteratorName =
strItName Then
            strValue = cStepIterators(lngIndex).Value
            Exit For
        End If
    Next lngIndex

    If lngIndex > cStepIterators.Count - 1 Then
        ' The iterator has not been defined for the
branch
        ' Raise an error
        On Error GoTo 0
        Err.Raise vbObjectError +
errParamNameInvalid, _
                gstrSource, _
                LoadResString(errParamNameInvalid)
    End If

    GetIteratorValue = strValue
    Exit Function

GetIteratorValueErr:
    ' Log the error code raised by Visual Basic
    Call LogErrors(Errors)
    gstrSource = mstrModuleName & "GetIteratorValue"
    On Error GoTo 0
    Err.Raise vbObjectError + errGetParamValueFailed,
_
            gstrSource, _
            LoadResString(errGetParamValueFailed)

End Function
Public Function SubstituteParameters(ByVal
strComString As String, _
        ByVal lngWorkspaceId As Long, _
        Optional StepIterators As cRunColIt =
Nothing, _
        Optional WspParameters As cArrParameters =
Nothing) As String
    ' This function substitutes all parameter names
and
    ' environment variables in the passed in string
with
    ' their values. It also substitutes the value for
the
    ' iterators, if any.
    ' Since the syntax is to enclose parameter names
and
    ' environment variables in "%", we check if a
given
    ' variable is a parameter - if so, we substitute
the
    ' parameter value - else we try to get the value
from
    ' the environment

    Dim intPos As Integer
    Dim intEndPos As Integer
    Dim strEnvVariable As String
    Dim strValue As String
    Dim strCommand As String
    Dim cTempStr As cStringSM

    ' Initialize the return value of the function to
the
    ' passed in command
    strCommand = strComString

    If WspParameters Is Nothing Then Set
WspParameters = gcParameters

    Set cTempStr = New cStringSM

    intPos = InStr(strCommand, gstrEnvVarSeparator)
    Do While intPos <> 0
        If Mid(strCommand, intPos + 1, 1) =
gstrEnvVarSeparator Then
            ' Wildcard character - to be substituted
by a single % - later!
            intPos = intPos + 2
            If intPos > Len(strCommand) Then Exit Do
        Else
            ' Extract the environment variable from
the passed
            ' in string
            intEndPos = InStr(intPos + 1, strCommand,
gstrEnvVarSeparator)

            If intEndPos > 0 Then
                strEnvVariable = Mid(strCommand,
intPos + 1, intEndPos - intPos - 1)
            Else
                On Error GoTo 0
                Err.Raise vbObjectError +
errParamSeparatorMissing, _
                        gstrSource, _

LoadResString(errParamSeparatorMissing)
            End If
            strValue = gstrEmptyString

            ' Get the value of the variable and call
a function
            ' to replace the variable with it's value
            strValue = GetValue(strEnvVariable,
lngWorkspaceId, StepIterators, WspParameters)
            ' The function raises an error if the
variable is
            ' not found
            strCommand =
cTempStr.ReplaceSubString(strCommand, _
                    gstrEnvVarSeparator &
strEnvVariable & gstrEnvVarSeparator, _
                    strValue)
        End If

        intPos = InStr(intPos, strCommand,
gstrEnvVarSeparator)
    Loop

    strCommand =
cTempStr.ReplaceSubString(strCommand, _
            gstrEnvVarSeparator &
gstrEnvVarSeparator, gstrEnvVarSeparator)

    Set cTempStr = Nothing
    SubstituteParameters = strCommand

End Function
Private Function GetValue(ByVal strParameter As
String, _
        ByVal lngWorkspaceId As Long, _
        cStepIterators As cRunColIt, _
        WspParameters As cArrParameters) As String
    ' This function returns the value for the passed
in
    ' parameter - it may be a workspace parameter, an
    ' environment variable or an iterator

    Dim intPos As Integer
    Dim intEndPos As Integer
    Dim strVariable As String
    Dim strValue As String
    Dim cParamRec As cParameter

    On Error GoTo GetValueErr

    ' Initialize the return value of the function to
the
    ' empty
    strValue = gstrEmptyString

    intPos = InStr(strParameter, gstrEnvVarSeparator)
    If intPos > 0 Then
        ' Extract the variable from the passed in
string
        intEndPos = InStr(intPos + 1, strParameter,
gstrEnvVarSeparator)
        If intEndPos = 0 Then
            intEndPos = Len(strParameter)
        End If

        strVariable = Mid(strParameter, intPos + 1,
intEndPos - intPos - 1)
    Else
        ' The separator charactor has not been passed
in -
        ' try to find the value of the passed in
parameter
        strVariable = strParameter
    End If

    If Not StringEmpty(strVariable) Then
        ' Check if this is the timestamp parameter
first
        If strVariable = gstrTimeStamp Then
            strValue = Format$(Now, mstrFormatString,
_
                    vbUseSystemDayOfWeek,
vbUseSystem)
        Else
            ' Try to find a parameter for the
workspace with
            ' the same name
```


© 2006 Hewlett-Packard Company. All rights reserved.

```
            Set cParamRec =
WspParameters.GetParameterValue(lngWorkspaceId, _
                    strVariable)
            If cParamRec Is Nothing Then
                If Not cStepIterators Is Nothing Then
                    ' If the string is not a
parameter, then check
                    ' if it is an iterator
                    strValue =
GetIteratorValue(cStepIterators, strVariable)
                End If

                If StringEmpty(strValue) Then
                    ' Neither - Check if it is an
environment variable
                    strValue = Environ$(strVariable)
                    If StringEmpty(strValue) Then
                        On Error GoTo 0
                        WriteError
errSubValuesFailed, _
                                OptArgs:="Invalid
parameter: " & gstrSQ & strVariable & gstrSQ
                        Err.Raise vbObjectError +
errSubValuesFailed, _
                                mstrModuleName &
"GetValue", _

LoadResString(errSubValuesFailed) & "Invalid
parameter: " & gstrSQ & strVariable & gstrSQ
                    End If
                End If
            Else
                strValue = cParamRec.ParameterValue
            End If
        End If
    End If

    GetValue = strValue

    Exit Function

GetValueErr:
    If Err.Number = vbObjectError +
errParamNameInvalid Then
        ' If the parameter has not been defined for
the
        ' workspace then check if it is an
environment
        ' variable
        Resume Next
    End If

    ' Log the error code raised by Visual Basic
    Call LogErrors(Errors)
    gstrSource = mstrModuleName & "GetValue"
    WriteError errSubValuesFailed, gstrSource,
"Parameter: " & gstrSQ & strVariable & gstrSQ
    On Error GoTo 0
    Err.Raise vbObjectError + errSubValuesFailed, _
            gstrSource, _
            LoadResString(errSubValuesFailed) &
"Parameter: " & gstrSQ & strVariable & gstrSQ
End Function
Public Function SQLFixup(strField As String) As
String
    ' Returns a string that can be executed by SQL
Server

    Dim cMyStr As New cStringSM
    Dim strTemp As String

    On Error GoTo SQLFixupErr

    strTemp = strField
    SQLFixup = strTemp

    ' Single-quotes have to be replaced by two
single-quotes,
    ' since a single-quote is the identifier
delimiter
    ' character - call a procedure to do the replace
'    SQLFixup = cMyStr.ReplaceSubString(strTemp,
gstrDQ, "\" & gstrDQ)

    ' Replace pipe characters with the corresponding
chr function
    ' SQLFixup = cMyStr.ReplaceSubString(strTemp,
gstrDQ, gstrDQ & gstrDQ)

    Exit Function

SQLFixupErr:
    gstrSource = mstrModuleName & "SQLFixup"
    LogErrors Errors
    On Error GoTo 0
    Err.Raise vbObjectError +
errMakeFieldValidFailed, _
            gstrSource,
LoadResString(errMakeFieldValidFailed)

End Function
Public Function TranslateStepLabel(sLabel As String)
As String
    ' Translates the passed in step label to a valid
file name
    ' All characters in the label that are invalid
for filenames (viz. \ / : * ? " < > |)
    ' and spaces are substituted with underscores -
also ensure that the resulting filename
    ' is not greater than 255 characters
    Dim cTempStr As New cStringSM
    TranslateStepLabel =
cTempStr.ReplaceSubString(sLabel, gstrFileSeparator,
"_")
    TranslateStepLabel =
cTempStr.ReplaceSubString(TranslateStepLabel, "/",
gstrUnderscore)
    TranslateStepLabel =
cTempStr.ReplaceSubString(TranslateStepLabel, ":",
gstrUnderscore)
    TranslateStepLabel =
cTempStr.ReplaceSubString(TranslateStepLabel, "*",
gstrUnderscore)
    TranslateStepLabel =
cTempStr.ReplaceSubString(TranslateStepLabel, "?",
gstrUnderscore)
    TranslateStepLabel =
cTempStr.ReplaceSubString(TranslateStepLabel, gstrDQ,
gstrUnderscore)
    TranslateStepLabel =
cTempStr.ReplaceSubString(TranslateStepLabel, "<",
gstrUnderscore)
    TranslateStepLabel =
cTempStr.ReplaceSubString(TranslateStepLabel, ">",
gstrUnderscore)
    TranslateStepLabel =
cTempStr.ReplaceSubString(TranslateStepLabel, "|",
gstrUnderscore)
    TranslateStepLabel =
cTempStr.ReplaceSubString(TranslateStepLabel,
gstrBlank, gstrUnderscore)

    ' Commas are substituted with underscores since
the command shell uses a comma to
    ' delimit commands
    TranslateStepLabel =
cTempStr.ReplaceSubString(TranslateStepLabel, ",",
gstrUnderscore)

    If Len(TranslateStepLabel) > MAX_PATH Then
        TranslateStepLabel = Mid(TranslateStepLabel,
1, MAX_PATH)
    End If

End Function

Public Function TypeOfObject(ByVal objNode As Object)
As Integer
    ' Determines the type of object that is passed in

    On Error GoTo TypeOfObjectErr
    gstrSource = mstrModuleName & "TypeOfObject"

    Select Case TypeName(objNode)
        Case "cWorkspace"
            TypeOfObject = gintWorkspace

        Case "cParameter"
            TypeOfObject = gintParameter

        Case "cConnection"
            TypeOfObject = gintParameterConnect

        Case "cConnDtl"
            TypeOfObject = gintConnectionDtl

        Case "cGlobalStep"
            TypeOfObject = gintGlobalStep

        Case "cManager"
            TypeOfObject = gintManagerStep

        Case "cWorker"
            TypeOfObject = gintWorkerStep

        Case "cStep"
```


© 2006 Hewlett-Packard Company. All rights reserved.

```
            ' If a step record is passed in, call a
function
            ' to determine the type of step
            TypeOfObject =
TypeOfStep(StepClass:=objNode)

        Case Else
            WriteError errTypeOfObjectFailed,
gstrSource, _
                    TypeName(objNode)
            On Error GoTo 0
            Err.Raise vbObjectError +
errTypeOfObjectFailed, _
                    gstrSource, _

LoadResString(errTypeOfObjectFailed)
    End Select

    Exit Function

TypeOfObjectErr:
    ' Log the error code raised by Visual Basic
    Call LogErrors(Errors)
    On Error GoTo 0
    Err.Raise vbObjectError + errTypeOfObjectFailed,
_
            gstrSource, _
            LoadResString(errTypeOfObjectFailed)

End Function
```

ConnDtlCommon.bas

```
Attribute VB_Name = "ConnDtlCommon"
'  FILE:       ConnDtlCommon.bas
'              Microsoft TPC-H Kit Ver. 1.00
'              Copyright Microsoft, 1999
'              All Rights Reserved
'
'
'  PURPOSE:    Contains functionality common across
StepMaster and
'              SMRunOnly, pertaining to connections
'              Specifically, functions to load
connections in an array
'              and so on.
'  Contact:    Reshma Tharamal
(reshmat@microsoft.com)
'
Option Explicit

' Used to indicate the source module name when errors
' are raised by this module
Private Const mstrModuleName As String =
"ConnDtlCommon."

Public Sub LoadRSInConnDtlArray(rstConns As
Recordset, cConns As cConnDtls)

    Dim cNewConnDtl As cConnDtl

    On Error GoTo LoadRSInConnDtlArrayErr

    If rstConns.RecordCount = 0 Then
        Exit Sub
    End If

    rstConns.MoveFirst
    While Not rstConns.EOF

        Set cNewConnDtl = New cConnDtl

        ' Initialize ConnDtl values
        ' Call a procedure to raise an error if
mandatory fields are null.
        cNewConnDtl.ConnNameId =
ErrorOnNullField(rstConns, FLD_ID_CONN_NAME)
        cNewConnDtl.WorkspaceId =
ErrorOnNullField(rstConns, FLD_ID_WORKSPACE)
        cNewConnDtl.ConnName =
CStr(ErrorOnNullField(rstConns,
FLD_CONN_DTL_CONNECTION_NAME))
        cNewConnDtl.ConnectionString =
CheckForNullField(rstConns,
FLD_CONN_DTL_CONNECTION_STRING)
        cNewConnDtl.ConnType =
CheckForNullField(rstConns,
FLD_CONN_DTL_CONNECTION_TYPE)

        cConns.Load cNewConnDtl

        Set cNewConnDtl = Nothing
        rstConns.MoveNext
    Wend

    Exit Sub

LoadRSInConnDtlArrayErr:
    LogErrors Errors
    gstrSource = mstrModuleName &
"LoadRSInConnDtlArray"
    On Error GoTo 0
    Err.Raise vbObjectError + errLoadRsInArrayFailed,
gstrSource, _
            LoadResString(errLoadRsInArrayFailed)
End Sub
```

ConnectionCommon.bas

```
Attribute VB_Name = "ConnectionCommon"
'  FILE:       ConnnectionCommon.bas
'              Microsoft TPC-H Kit Ver. 1.00
'              Copyright Microsoft, 1999
'              All Rights Reserved
'
'
'  PURPOSE:    Contains functionality common across
StepMaster and
'              SMRunOnly, pertaining to connection
strings
'              Specifically, functions to load
connections strings
'              in an array and so on.
'  Contact:    Reshma Tharamal
(reshmat@microsoft.com)
'
Option Explicit

' Used to indicate the source module name when errors
' are raised by this module
Private Const mstrModuleName As String =
"ConnectionCommon."

Public Sub LoadRecordsetInConnectionArray(rstConns As
Recordset, cConns As cConnections)

    Dim cNewConnection As cConnection

    On Error GoTo LoadRecordsetInConnectionArrayErr

    If rstConns.RecordCount = 0 Then
        Exit Sub
    End If

    rstConns.MoveFirst
    While Not rstConns.EOF

        Set cNewConnection = New cConnection

        ' Initialize Connection values
        ' Call a procedure to raise an error if
mandatory fields are null.
        cNewConnection.ConnectionId =
ErrorOnNullField(rstConns, "connection_id")
        cNewConnection.WorkspaceId =
CStr(ErrorOnNullField(rstConns, FLD_ID_WORKSPACE))
        cNewConnection.ConnectionName =
CStr(ErrorOnNullField(rstConns, "connection_name"))
        cNewConnection.ConnectionValue =
CheckForNullField(rstConns, "connection_value")
        cNewConnection.Description =
CheckForNullField(rstConns, "description")

        cNewConnection.NoCountDisplay =
CheckForNullField(rstConns, "no_count_display")
        cNewConnection.NoExecute =
CheckForNullField(rstConns, "no_execute")
        cNewConnection.ParseQueryOnly =
CheckForNullField(rstConns, "parse_query_only")
        cNewConnection.QuotedIdentifiers =
CheckForNullField(rstConns,
"ANSI_quoted_identifiers")
        cNewConnection.AnsiNulls =
CheckForNullField(rstConns, "ANSI_nulls")
        cNewConnection.ShowQueryPlan =
CheckForNullField(rstConns, "show_query_plan")
        cNewConnection.ShowStatsTime =
CheckForNullField(rstConns, "show_stats_time")
        cNewConnection.ShowStatsIO =
CheckForNullField(rstConns, "show_stats_io")
```


© 2006 Hewlett-Packard Company. All rights reserved.

```
        cNewConnection.ParseOdbcMsg =
CheckForNullField(rstConns,
"parse_odbc_msg_prefixes")
        cNewConnection.RowCount =
CheckForNullField(rstConns, "row_count")
        cNewConnection.TsqlBatchSeparator =
CheckForNullField(rstConns, "tsql_batch_separator")
        cNewConnection.QueryTimeOut =
CheckForNullField(rstConns, "query_time_out")
        cNewConnection.ServerLanguage =
CheckForNullField(rstConns, "server_language")
        cNewConnection.CharacterTranslation =
CheckForNullField(rstConns, "character_translation")
        cNewConnection.RegionalSettings =
CheckForNullField(rstConns, "regional_settings")

        cConns.Load cNewConnection

        Set cNewConnection = Nothing
        rstConns.MoveNext
    Wend

    Exit Sub

LoadRecordsetInConnectionArrayErr:
    LogErrors Errors
    gstrSource = mstrModuleName &
"LoadRecordsetInConnectionArray"
    On Error GoTo 0
    Err.Raise vbObjectError + errLoadRsInArrayFailed,
gstrSource, _
            LoadResString(errLoadRsInArrayFailed)
End Sub
```

cParameter.cls

```
VERSION 1.0 CLASS
BEGIN
  MultiUse = -1  'True
END
Attribute VB_Name = "cParameter"
Attribute VB_GlobalNameSpace = False
Attribute VB_Creatable = True
Attribute VB_PredeclaredId = False
Attribute VB_Exposed = False
'  FILE:        cParameter.cls
'               Microsoft TPC-H Kit Ver. 1.00
'               Copyright Microsoft, 1999
'               All Rights Reserved
'
'
'  PURPOSE:     Encapsulates the properties and
methods of a parameter.
'               Contains functions to insert, update
and delete
'               workspace_parameters records from the
database.
'  Contact:     Reshma Tharamal
(reshmat@microsoft.com)
'
Option Explicit
Option Base 0

' Local variable(s) to hold property value(s)
Private mlngWorkspaceId As Long
Private mlngParameterId As Long
Private mstrParameterName As String
Private mstrParameterValue As String
Private mstrDescription As String
Private mintParameterType As Integer
Private mdbsStepMaster As Database
Private mintOperation As Operation
Private mlngPosition As Long

' Used to indicate the source module name when errors
' are raised by this class
Private mstrSource As String
Private Const mstrModuleName As String =
"cParameter."

' The cSequence class is used to generate unique
parameter identifiers
Private mParameterSeq As cSequence

' The StringSM class is used to carry out string
operations
Private mFieldValue As cStringSM

' Parameter types
Public Enum ParameterType
    gintParameterGeneric = 0
    gintParameterConnect
    gintParameterApplication
    gintParameterBuiltIn
End Enum


Private Sub AssignParameters(qyExec As DAO.QueryDef)
    ' Assigns values to the parameters in the
querydef object
    ' The parameter names are cryptic to make them
different
    ' from the field names. When the parameter names
are
    ' the same as the field names, parameters in the
where
    ' clause do not get created.

    Dim prmParam As DAO.Parameter

    On Error GoTo AssignParametersErr

    For Each prmParam In qyExec.Parameters
        Select Case prmParam.Name
            Case "[w_id]"
                prmParam.Value = mlngWorkspaceId

            Case "[p_id]"
                prmParam.Value = mlngParameterId

            Case "[p_name]"
                prmParam.Value = mstrParameterName

            Case "[p_value]"
                prmParam.Value = mstrParameterValue

            Case "[desc]"
                prmParam.Value = mstrDescription

            Case "[p_type]"
                prmParam.Value = mintParameterType

            Case Else
                ' Write the parameter name that is
faulty
                WriteError errInvalidParameter,
mstrSource, _
                        prmParam.Name
                On Error GoTo 0
                Err.Raise errInvalidParameter,
mstrModuleName & "AssignParameters", _

LoadResString(errInvalidParameter)
        End Select
    Next prmParam

'    qyExec.Parameters("w_id").Value =
mlngWorkspaceId
'    qyExec.Parameters("p_id").Value =
mlngParameterId
'    qyExec.Parameters("p_name").Value =
mstrParameterName
'    qyExec.Parameters("p_value").Value =
mstrParameterValue
'

    Exit Sub

AssignParametersErr:

    mstrSource = mstrModuleName & "AssignParameters"
    Call LogErrors(Errors)
    On Error GoTo 0
    Err.Raise vbObjectError +
errAssignParametersFailed, _
        mstrSource,
LoadResString(errAssignParametersFailed)

End Sub

Public Property Let Position(ByVal RHS As Long)

    mlngPosition = RHS

End Property

Public Property Get Position() As Long

    Position = mlngPosition

End Property

Public Function Clone() As cParameter

    ' Creates a copy of a given parameter

    Dim cCloneParam As cParameter
```


© 2006 Hewlett-Packard Company. All rights reserved.

```
    On Error GoTo CloneErr
    mstrSource = mstrModuleName & "Clone"

    Set cCloneParam = New cParameter

    ' Copy all the parameter properties to the newly
    ' created parameter
    Set cCloneParam.NodeDB = mdbsStepMaster
    cCloneParam.WorkspaceId = mlngWorkspaceId
    cCloneParam.ParameterId = mlngParameterId
    cCloneParam.ParameterName = mstrParameterName
    cCloneParam.ParameterValue = mstrParameterValue
    cCloneParam.Description = mstrDescription
    cCloneParam.ParameterType = mintParameterType
    cCloneParam.IndOperation = mintOperation
    cCloneParam.Position = mlngPosition

    ' And set the return value to the newly created
parameter
    Set Clone = cCloneParam
    Set cCloneParam = Nothing

    Exit Function

CloneErr:
    LogErrors Errors
    mstrSource = mstrModuleName & "Clone"
    On Error GoTo 0
    Err.Raise vbObjectError + errCloneFailed, _
            mstrSource, LoadResString(errCloneFailed)

End Function
Public Property Set NodeDB(vdata As Database)

    Set mdbsStepMaster = vdata

End Property
Public Property Get NodeDB() As Database

    Set NodeDB = mdbsStepMaster

End Property

Private Sub CheckDupParameterName()
    ' Check if the parameter name already exists in
the workspace

    Dim rstParameter As Recordset
    Dim strSql As String
    Dim qy As DAO.QueryDef

    On Error GoTo CheckDupParameterNameErr
    mstrSource = mstrModuleName &
"CheckDupParameterName"

    ' Create a recordset object to retrieve the count
of all parameters
    ' for the workspace with the same name
    strSql = "Select count(*) as parameter_count " &
_
        " from workspace_parameters " & _
        " where workspace_id = [w_id]" & _
        " and parameter_name = [p_name]" & _
        " and parameter_id <> [p_id]"

    Set qy =
mdbsStepMaster.CreateQueryDef(gstrEmptyString,
strSql)
    Call AssignParameters(qy)

    Set rstParameter =
qy.OpenRecordset(dbOpenForwardOnly)

    If rstParameter![parameter_count] > 0 Then
        rstParameter.Close
        qy.Close
        ShowError errDuplicateParameterName
        On Error GoTo 0
        Err.Raise vbObjectError +
errDuplicateParameterName, _
            mstrSource,
LoadResString(errDuplicateParameterName)
    End If

    rstParameter.Close
    qy.Close

    Exit Sub

CheckDupParameterNameErr:
    LogErrors Errors
    mstrSource = mstrModuleName &
"CheckDupParameterName"
    On Error GoTo 0
    Err.Raise vbObjectError +
errCheckDupParameterNameFailed, _
        mstrSource,
LoadResString(errCheckDupParameterNameFailed)

End Sub
Private Sub CheckDB()
    ' Check if the database object has been
initialized

    If mdbsStepMaster Is Nothing Then
        On Error GoTo 0
        Err.Raise vbObjectError + errInvalidDB, _
            mstrModuleName & "CheckDB",
LoadResString(errInvalidDB)
    End If

End Sub
Public Property Let ParameterValue(vdata As String)

    mstrParameterValue = vdata

End Property
Public Property Let Description(vdata As String)

    mstrDescription = vdata

End Property
Public Property Let ParameterType(vdata As
ParameterType)

    mintParameterType = vdata

End Property

Public Property Let ParameterName(vdata As String)

    If vdata = gstrEmptyString Then

        ShowError errParameterNameMandatory
        On Error GoTo 0
        ' Propogate this error back to the caller
        Err.Raise vbObjectError +
errParameterNameMandatory, _
            mstrSource,
LoadResString(errParameterNameMandatory)
    Else
        mstrParameterName = vdata
    End If

End Property

Public Property Let ParameterId(vdata As Long)
    mlngParameterId = vdata
End Property

Public Property Let IndOperation(ByVal vdata As
Operation)

    ' The valid operations are define in the
cOperations
    ' class. Check if the operation is valid
    Select Case vdata
        Case QueryOp, InsertOp, UpdateOp, DeleteOp
            mintOperation = vdata

        Case Else
            On Error GoTo 0
            Err.Raise vbObjectError +
errInvalidOperation, _
                    mstrSource,
LoadResString(errInvalidOperation)
    End Select

End Property
Public Sub Validate()
    ' Each distinct object will have a Validate
method which
    ' will check if the class properties are valid.
This method
    ' will be used to check interdependant properties
that
    ' cannot be validated by the let procedures.
    ' It should be called by the add and modify
methods of the class

    On Error GoTo ValidateErr

    ' Check if the db object is valid
    Call CheckDB

    ' Call procedure to raise an error if the
parameter name
    ' already exists in the workspace -
```


© 2006 Hewlett-Packard Company. All rights reserved.

```
    ' if there are duplicates, we don't know what
value for the
    ' parameter to use at runtime
    Call CheckDupParameterName

    Exit Sub

ValidateErr:

    mstrSource = mstrModuleName & "Validate"
    Call LogErrors(Errors)
    On Error GoTo 0
    Err.Raise vbObjectError + errValidateFailed, _
        mstrSource, LoadResString(errValidateFailed)

End Sub
Public Property Let WorkspaceId(vdata As Long)

    mlngWorkspaceId = vdata

End Property

Public Sub Add()

    Dim strInsert As String
    Dim qy As DAO.QueryDef

    On Error GoTo AddErr

    ' Validate the record before trying to insert the
record
    Call Validate

    ' Create a temporary querydef object
    strInsert = "insert into workspace_parameters " &
_
            "( workspace_id, parameter_id, " & _
            " parameter_name, parameter_value, " & _
            " description, parameter_type ) " & _
            " values ( [w_id], [p_id], [p_name],
[p_value], [desc], [p_type] ) "
    Set qy =
mdbsStepMaster.CreateQueryDef(gstrEmptyString,
strInsert)

    ' Call a procedure to assign the parameter values
    Call AssignParameters(qy)

    qy.Execute dbFailOnError
    qy.Close

'    strInsert = "insert into workspace_parameters "
& _
'            "( workspace_id, parameter_id, " & _
'            " parameter_name, parameter_value ) " &
_
'            " values ( " & _
'            Str(mlngWorkspaceId) & ", " &
Str(mlngParameterId) & _
'            ", " &
mFieldValue.MakeStringFieldValid(mstrParameterName) &
_
'            ", " &
mFieldValue.MakeStringFieldValid(mstrParameterValue)
& " ) "
'    mdbsStepMaster.Execute strInsert, dbFailOnError
+ dbSQLPassThrough

    Exit Sub

AddErr:

    mstrSource = mstrModuleName & "Add"
    Call LogErrors(Errors)
    On Error GoTo 0
    Err.Raise vbObjectError +
errParameterInsertFailed, _
        mstrSource,
LoadResString(errParameterInsertFailed)

End Sub
Public Sub Delete()

    Dim strDelete As String
    Dim qy As DAO.QueryDef

    On Error GoTo DeleteErr

    ' Check if the db object is valid
    Call CheckDB

    strDelete = "delete from workspace_parameters " &
_
            " where parameter_id = [p_id]"
    Set qy =
mdbsStepMaster.CreateQueryDef(gstrEmptyString,
strDelete)

    Call AssignParameters(qy)
    qy.Execute dbFailOnError

    qy.Close

    Exit Sub

DeleteErr:
    LogErrors Errors
    mstrSource = mstrModuleName & "Delete"
    On Error GoTo 0
    Err.Raise vbObjectError +
errDeleteParameterFailed, _
            mstrSource, _
            LoadResString(errDeleteParameterFailed)

End Sub

Public Sub Modify()

    Dim strUpdate As String
    Dim qy As QueryDef

    On Error GoTo ModifyErr

    ' Validate the updated values before trying to
modify the db
    Call Validate

    ' Create a temporary querydef object with the
modify string
    strUpdate = "update workspace_parameters " & _
            " set workspace_id = [w_id], " & _
            "parameter_name = [p_name], " & _
            "parameter_value = [p_value], " & _
            "description = [desc], " & _
            "parameter_type = [p_type] " & _
            " where parameter_id = [p_id]"
    Set qy =
mdbsStepMaster.CreateQueryDef(gstrEmptyString,
strUpdate)

    ' Call a procedure to assign the parameter values
to the
    ' querydef object
    Call AssignParameters(qy)
    qy.Execute dbFailOnError

    qy.Close

'    mdbsStepMaster.Execute strUpdate, dbFailOnError
'
    Exit Sub

ModifyErr:

    mstrSource = mstrModuleName & "Modify"
    Call LogErrors(Errors)
    On Error GoTo 0
    Err.Raise vbObjectError +
errParameterUpdateFailed, _
        mstrSource,
LoadResString(errParameterUpdateFailed)

End Sub
Public Property Get ParameterName() As String

    ParameterName = mstrParameterName

End Property

Public Property Get ParameterId() As Long

    ParameterId = mlngParameterId

End Property
Public Property Get NextIdentifier() As Long

    Dim lngNextId As Long

    On Error GoTo NextIdentifierErr

    ' First check if the database object is valid
    Call CheckDB

    ' Retrieve the next identifier using the sequence
class
    Set mParameterSeq = New cSequence
    Set mParameterSeq.IdDatabase = mdbsStepMaster
    mParameterSeq.IdentifierColumn = FLD_ID_PARAMETER
```


© 2006 Hewlett-Packard Company. All rights reserved.

```
    lngNextId = mParameterSeq.Identifier
    Set mParameterSeq = Nothing

    NextIdentifier = lngNextId
    Exit Property

NextIdentifierErr:
    LogErrors Errors
    mstrSource = mstrModuleName & "NextIdentifier"
    On Error GoTo 0
    Err.Raise vbObjectError + errIdGetFailed, _
        mstrSource, LoadResString(errIdGetFailed)

End Property
Public Property Get IndOperation() As Operation

    IndOperation = mintOperation

End Property

Public Property Get WorkspaceId() As Long

    WorkspaceId = mlngWorkspaceId

End Property

Public Property Get ParameterValue() As String

    ParameterValue = mstrParameterValue

End Property
Public Property Get Description() As String

    Description = mstrDescription

End Property
Public Property Get ParameterType() As ParameterType

    ParameterType = mintParameterType

End Property


Private Sub Class_Initialize()

    Set mFieldValue = New cStringSM

    ' Initialize the operation indicator variable to
Query
    ' It will be modified later by the collection
class when
    ' inserts, updates or deletes are performed
    mintOperation = QueryOp

End Sub

Private Sub Class_Terminate()

    Set mdbsStepMaster = Nothing
    Set mFieldValue = Nothing

End Sub
```

cRunColIt.cls

```
VERSION 1.0 CLASS
BEGIN
  MultiUse = -1  'True
END
Attribute VB_Name = "cRunColIt"
Attribute VB_GlobalNameSpace = False
Attribute VB_Creatable = True
Attribute VB_PredeclaredId = False
Attribute VB_Exposed = False
'  FILE:        cRunColIt.cls
'               Microsoft TPC-H Kit Ver. 1.00
'               Copyright Microsoft, 1999
'               All Rights Reserved
'
'
'  PURPOSE:     This module implements a stack of
Iterator nodes.
'               Ensures that only cRunItNode objects
are stored in the stack.
'  Contact:     Reshma Tharamal
(reshmat@microsoft.com)
'
Option Explicit

' Used to indicate the source module name when errors
' are raised by this class
Private Const mstrModuleName As String = "cRunColIt."
Private mstrSource As String

Private mcIterators As cStack
Public Sub Clear()

    mcIterators.Clear

End Sub

Private Sub Class_Initialize()

    Set mcIterators = New cStack

End Sub

Private Sub Class_Terminate()

    Set mcIterators = Nothing

End Sub


Public Function Value(strItName As String) As String

    Dim lngIndex As Long

    For lngIndex = 0 To mcIterators.Count - 1
        If mcIterators(lngIndex).IteratorName =
strItName Then
            Value = mcIterators(lngIndex).Value
            Exit For
        End If
    Next lngIndex

End Function

Public Property Get Item(ByVal Position As Long) As
cRunItNode
Attribute Item.VB_UserMemId = 0

    Set Item = mcIterators(Position)

End Property


Public Function Count() As Long

    Count = mcIterators.Count

End Function

Public Function Pop() As cRunItNode

    Set Pop = mcIterators.Pop

End Function

Public Sub Push(objToPush As cRunItNode)

    Call mcIterators.Push(objToPush)

End Sub
```

cRunInst.cls

```
VERSION 1.0 CLASS
BEGIN
  MultiUse = -1  'True
  Persistable = 0  'NotPersistable
  DataBindingBehavior = 0  'vbNone
  DataSourceBehavior  = 0  'vbNone
  MTSTransactionMode  = 0  'NotAnMTSObject
END
Attribute VB_Name = "cRunInst"
Attribute VB_GlobalNameSpace = False
Attribute VB_Creatable = True
Attribute VB_PredeclaredId = False
Attribute VB_Exposed = False
'  FILE:        cRunColIt.cls
'               Microsoft TPC-H Kit Ver. 1.00
'               Copyright Microsoft, 1999
'               All Rights Reserved
'
'
'  PURPOSE:     This module controls the run
processing. It runs a branch
'               at a time and raises events when each
step completes execution.
'  Contact:     Reshma Tharamal
(reshmat@microsoft.com)
'
Option Explicit
```


© 2006 Hewlett-Packard Company. All rights reserved.

```
' Used to indicate the source module name when errors
' are raised by this class
Private Const mstrModuleName As String = "cRunInst."
Private mstrSource As String

' Local variable(s) to hold property value(s)
Private mstrRootKey As String
Public WspId As Long
Private mcParameters As cArrParameters
Private mcRunSteps As cArrSteps
Private mcRunConstraints As cArrConstraints
Public RunConnections As cConnections
Public RunConnDtls As cConnDtls
Private mcvntWspPreCons As Variant
Private mcvntWspPostCons As Variant
Private mcNavSteps As cStepTree

Private mcInstances As cInstances
Private mcFreeSteps As cVectorLng
Private mcFailures As cFailedSteps
Private mblnAsk As Boolean   ' Set to True when the a
step with continuation criteria=Ask fails
Private mblnAbort As Boolean ' Set to True when the
run is aborted
Private msAbortDtls As String
Private mbarrFree() As Byte
Private WithEvents mcTermSteps As cTermSteps
Attribute mcTermSteps.VB_VarHelpID = -1
Public RunId As Long
Public CreateInputFiles As Boolean

Private Enum WspLogEvents
    mintRunStart
    mintRunComplete
    mintStepStart
    mintStepComplete
End Enum

Private mcWspLog As cFileSM

Private mstrCurBranchRoot As String
Private mcDummyRootInstance As cInstance

' Key for the dummy root instance - Should be a key
that is invalid for an actual step record
Private Const mstrDummyRootKey As String = "D"

' Public events to notify the calling function of the
' start and end time for each step
Public Event RunStart(dtmStartTime As Currency,
strWspLog As String)
Public Event RunComplete(dtmEndTime As Currency)
Public Event StepStart(cStepRecord As cStep,
dtmStartTime As Currency, _
        lngInstanceId As Long, lParentInstanceId As
Long, sPath As String, _
        sIts As String, sItValue As String)
Public Event StepComplete(cStepRecord As cStep,
dtmEndTime As Currency, lngInstanceId As Long,
lElapsed As Long)
Public Event ProcessStart(cStepRecord As cStep,
strCommand As String, _
        dtmStartTime As Currency, lngInstanceId As
Long, lParentInstanceId As Long, _
        sItValue As String)
Public Event ProcessComplete(cStepRecord As cStep,
dtmEndTime As Currency, lngInstanceId As Long,
lElapsed As Long)

' The class that will execute each step - we trap the
events
' that are raised by it when a step starts/completes
' execution
Private WithEvents cExecStep1 As cRunStep
Attribute cExecStep1.VB_VarHelpID = -1
Private WithEvents cExecStep2 As cRunStep
Attribute cExecStep2.VB_VarHelpID = -1
Private WithEvents cExecStep3 As cRunStep
Attribute cExecStep3.VB_VarHelpID = -1
Private WithEvents cExecStep4 As cRunStep
Attribute cExecStep4.VB_VarHelpID = -1
Private WithEvents cExecStep5 As cRunStep
Attribute cExecStep5.VB_VarHelpID = -1
Private WithEvents cExecStep6 As cRunStep
Attribute cExecStep6.VB_VarHelpID = -1
Private WithEvents cExecStep7 As cRunStep
Attribute cExecStep7.VB_VarHelpID = -1
Private WithEvents cExecStep8 As cRunStep
Attribute cExecStep8.VB_VarHelpID = -1
Private WithEvents cExecStep9 As cRunStep
Attribute cExecStep9.VB_VarHelpID = -1

Private WithEvents cExecStep10 As cRunStep
Attribute cExecStep10.VB_VarHelpID = -1
Private WithEvents cExecStep11 As cRunStep
Attribute cExecStep11.VB_VarHelpID = -1
Private WithEvents cExecStep12 As cRunStep
Attribute cExecStep12.VB_VarHelpID = -1
Private WithEvents cExecStep13 As cRunStep
Attribute cExecStep13.VB_VarHelpID = -1
Private WithEvents cExecStep14 As cRunStep
Attribute cExecStep14.VB_VarHelpID = -1
Private WithEvents cExecStep15 As cRunStep
Attribute cExecStep15.VB_VarHelpID = -1
Private WithEvents cExecStep16 As cRunStep
Attribute cExecStep16.VB_VarHelpID = -1
Private WithEvents cExecStep17 As cRunStep
Attribute cExecStep17.VB_VarHelpID = -1
Private WithEvents cExecStep18 As cRunStep
Attribute cExecStep18.VB_VarHelpID = -1
Private WithEvents cExecStep19 As cRunStep
Attribute cExecStep19.VB_VarHelpID = -1

Private WithEvents cExecStep20 As cRunStep
Attribute cExecStep20.VB_VarHelpID = -1
Private WithEvents cExecStep21 As cRunStep
Attribute cExecStep21.VB_VarHelpID = -1
Private WithEvents cExecStep22 As cRunStep
Attribute cExecStep22.VB_VarHelpID = -1
Private WithEvents cExecStep23 As cRunStep
Attribute cExecStep23.VB_VarHelpID = -1
Private WithEvents cExecStep24 As cRunStep
Attribute cExecStep24.VB_VarHelpID = -1
Private WithEvents cExecStep25 As cRunStep
Attribute cExecStep25.VB_VarHelpID = -1
Private WithEvents cExecStep26 As cRunStep
Attribute cExecStep26.VB_VarHelpID = -1
Private WithEvents cExecStep27 As cRunStep
Attribute cExecStep27.VB_VarHelpID = -1
Private WithEvents cExecStep28 As cRunStep
Attribute cExecStep28.VB_VarHelpID = -1
Private WithEvents cExecStep29 As cRunStep
Attribute cExecStep29.VB_VarHelpID = -1

Private WithEvents cExecStep30 As cRunStep
Attribute cExecStep30.VB_VarHelpID = -1
Private WithEvents cExecStep31 As cRunStep
Attribute cExecStep31.VB_VarHelpID = -1
Private WithEvents cExecStep32 As cRunStep
Attribute cExecStep32.VB_VarHelpID = -1
Private WithEvents cExecStep33 As cRunStep
Attribute cExecStep33.VB_VarHelpID = -1
Private WithEvents cExecStep34 As cRunStep
Attribute cExecStep34.VB_VarHelpID = -1
Private WithEvents cExecStep35 As cRunStep
Attribute cExecStep35.VB_VarHelpID = -1
Private WithEvents cExecStep36 As cRunStep
Attribute cExecStep36.VB_VarHelpID = -1
Private WithEvents cExecStep37 As cRunStep
Attribute cExecStep37.VB_VarHelpID = -1
Private WithEvents cExecStep38 As cRunStep
Attribute cExecStep38.VB_VarHelpID = -1
Private WithEvents cExecStep39 As cRunStep
Attribute cExecStep39.VB_VarHelpID = -1

Private WithEvents cExecStep40 As cRunStep
Attribute cExecStep40.VB_VarHelpID = -1
Private WithEvents cExecStep41 As cRunStep
Attribute cExecStep41.VB_VarHelpID = -1
Private WithEvents cExecStep42 As cRunStep
Attribute cExecStep42.VB_VarHelpID = -1
Private WithEvents cExecStep43 As cRunStep
Attribute cExecStep43.VB_VarHelpID = -1
Private WithEvents cExecStep44 As cRunStep
Attribute cExecStep44.VB_VarHelpID = -1
Private WithEvents cExecStep45 As cRunStep
Attribute cExecStep45.VB_VarHelpID = -1
Private WithEvents cExecStep46 As cRunStep
Attribute cExecStep46.VB_VarHelpID = -1
Private WithEvents cExecStep47 As cRunStep
Attribute cExecStep47.VB_VarHelpID = -1
Private WithEvents cExecStep48 As cRunStep
Attribute cExecStep48.VB_VarHelpID = -1
Private WithEvents cExecStep49 As cRunStep
Attribute cExecStep49.VB_VarHelpID = -1

Private WithEvents cExecStep50 As cRunStep
Attribute cExecStep50.VB_VarHelpID = -1
Private WithEvents cExecStep51 As cRunStep
Attribute cExecStep51.VB_VarHelpID = -1
Private WithEvents cExecStep52 As cRunStep
Attribute cExecStep52.VB_VarHelpID = -1
Private WithEvents cExecStep53 As cRunStep
Attribute cExecStep53.VB_VarHelpID = -1
Private WithEvents cExecStep54 As cRunStep
Attribute cExecStep54.VB_VarHelpID = -1
Private WithEvents cExecStep55 As cRunStep
Attribute cExecStep55.VB_VarHelpID = -1
```


© 2006 Hewlett-Packard Company. All rights reserved.

```
Private WithEvents cExecStep56 As cRunStep
Attribute cExecStep56.VB_VarHelpID = -1
Private WithEvents cExecStep57 As cRunStep
Attribute cExecStep57.VB_VarHelpID = -1
Private WithEvents cExecStep58 As cRunStep
Attribute cExecStep58.VB_VarHelpID = -1
Private WithEvents cExecStep59 As cRunStep
Attribute cExecStep59.VB_VarHelpID = -1

Private WithEvents cExecStep60 As cRunStep
Attribute cExecStep60.VB_VarHelpID = -1
Private WithEvents cExecStep61 As cRunStep
Attribute cExecStep61.VB_VarHelpID = -1
Private WithEvents cExecStep62 As cRunStep
Attribute cExecStep62.VB_VarHelpID = -1
Private WithEvents cExecStep63 As cRunStep
Attribute cExecStep63.VB_VarHelpID = -1
Private WithEvents cExecStep64 As cRunStep
Attribute cExecStep64.VB_VarHelpID = -1
Private WithEvents cExecStep65 As cRunStep
Attribute cExecStep65.VB_VarHelpID = -1
Private WithEvents cExecStep66 As cRunStep
Attribute cExecStep66.VB_VarHelpID = -1
Private WithEvents cExecStep67 As cRunStep
Attribute cExecStep67.VB_VarHelpID = -1
Private WithEvents cExecStep68 As cRunStep
Attribute cExecStep68.VB_VarHelpID = -1
Private WithEvents cExecStep69 As cRunStep
Attribute cExecStep69.VB_VarHelpID = -1

Private WithEvents cExecStep70 As cRunStep
Attribute cExecStep70.VB_VarHelpID = -1
Private WithEvents cExecStep71 As cRunStep
Attribute cExecStep71.VB_VarHelpID = -1
Private WithEvents cExecStep72 As cRunStep
Attribute cExecStep72.VB_VarHelpID = -1
Private WithEvents cExecStep73 As cRunStep
Attribute cExecStep73.VB_VarHelpID = -1
Private WithEvents cExecStep74 As cRunStep
Attribute cExecStep74.VB_VarHelpID = -1
Private WithEvents cExecStep75 As cRunStep
Attribute cExecStep75.VB_VarHelpID = -1
Private WithEvents cExecStep76 As cRunStep
Attribute cExecStep76.VB_VarHelpID = -1
Private WithEvents cExecStep77 As cRunStep
Attribute cExecStep77.VB_VarHelpID = -1
Private WithEvents cExecStep78 As cRunStep
Attribute cExecStep78.VB_VarHelpID = -1
Private WithEvents cExecStep79 As cRunStep
Attribute cExecStep79.VB_VarHelpID = -1

Private WithEvents cExecStep80 As cRunStep
Attribute cExecStep80.VB_VarHelpID = -1
Private WithEvents cExecStep81 As cRunStep
Attribute cExecStep81.VB_VarHelpID = -1
Private WithEvents cExecStep82 As cRunStep
Attribute cExecStep82.VB_VarHelpID = -1
Private WithEvents cExecStep83 As cRunStep
Attribute cExecStep83.VB_VarHelpID = -1
Private WithEvents cExecStep84 As cRunStep
Attribute cExecStep84.VB_VarHelpID = -1
Private WithEvents cExecStep85 As cRunStep
Attribute cExecStep85.VB_VarHelpID = -1
Private WithEvents cExecStep86 As cRunStep
Attribute cExecStep86.VB_VarHelpID = -1
Private WithEvents cExecStep87 As cRunStep
Attribute cExecStep87.VB_VarHelpID = -1
Private WithEvents cExecStep88 As cRunStep
Attribute cExecStep88.VB_VarHelpID = -1
Private WithEvents cExecStep89 As cRunStep
Attribute cExecStep89.VB_VarHelpID = -1

Private WithEvents cExecStep90 As cRunStep
Attribute cExecStep90.VB_VarHelpID = -1
Private WithEvents cExecStep91 As cRunStep
Attribute cExecStep91.VB_VarHelpID = -1
Private WithEvents cExecStep92 As cRunStep
Attribute cExecStep92.VB_VarHelpID = -1
Private WithEvents cExecStep93 As cRunStep
Attribute cExecStep93.VB_VarHelpID = -1
Private WithEvents cExecStep94 As cRunStep
Attribute cExecStep94.VB_VarHelpID = -1
Private WithEvents cExecStep95 As cRunStep
Attribute cExecStep95.VB_VarHelpID = -1
Private WithEvents cExecStep96 As cRunStep
Attribute cExecStep96.VB_VarHelpID = -1
Private WithEvents cExecStep97 As cRunStep
Attribute cExecStep97.VB_VarHelpID = -1
Private WithEvents cExecStep98 As cRunStep
Attribute cExecStep98.VB_VarHelpID = -1
Private WithEvents cExecStep99 As cRunStep
Attribute cExecStep99.VB_VarHelpID = -1

Private Const msIt As String = " Iterator: "
Private Const msItValue As String = " Value: "
Public Sub Abort()

    On Error GoTo AbortErr

    ' Make sure that we don't execute any more steps
    Call StopRun

    If cExecStep1 Is Nothing And cExecStep2 Is
Nothing And cExecStep3 Is Nothing And cExecStep4 Is
Nothing And cExecStep5 Is Nothing And cExecStep6 Is
Nothing And cExecStep7 Is Nothing And cExecStep8 Is
Nothing And cExecStep9 Is Nothing And _
       cExecStep10 Is Nothing And cExecStep11 Is
Nothing And cExecStep12 Is Nothing And cExecStep13 Is
Nothing And cExecStep14 Is Nothing And cExecStep15 Is
Nothing And cExecStep16 Is Nothing And cExecStep17 Is
Nothing And cExecStep18 Is Nothing And cExecStep19 Is
Nothing And _
       cExecStep20 Is Nothing And cExecStep21 Is
Nothing And cExecStep22 Is Nothing And cExecStep23 Is
Nothing And cExecStep24 Is Nothing And cExecStep25 Is
Nothing And cExecStep26 Is Nothing And cExecStep27 Is
Nothing And cExecStep28 Is Nothing And cExecStep29 Is
Nothing And _
       cExecStep30 Is Nothing And cExecStep31 Is
Nothing And cExecStep32 Is Nothing And cExecStep33 Is
Nothing And cExecStep34 Is Nothing And cExecStep35 Is
Nothing And cExecStep36 Is Nothing And cExecStep37 Is
Nothing And cExecStep38 Is Nothing And cExecStep39 Is
Nothing And _
       cExecStep40 Is Nothing And cExecStep41 Is
Nothing And cExecStep42 Is Nothing And cExecStep43 Is
Nothing And cExecStep44 Is Nothing And cExecStep45 Is
Nothing And cExecStep46 Is Nothing And cExecStep47 Is
Nothing And cExecStep48 Is Nothing And cExecStep49 Is
Nothing And _
       cExecStep50 Is Nothing And cExecStep51 Is
Nothing And cExecStep52 Is Nothing And cExecStep53 Is
Nothing And cExecStep54 Is Nothing And cExecStep55 Is
Nothing And cExecStep56 Is Nothing And cExecStep57 Is
Nothing And cExecStep58 Is Nothing And cExecStep59 Is
Nothing And _
       cExecStep60 Is Nothing And cExecStep61 Is
Nothing And cExecStep62 Is Nothing And cExecStep63 Is
Nothing And cExecStep64 Is Nothing And cExecStep65 Is
Nothing And cExecStep66 Is Nothing And cExecStep67 Is
Nothing And cExecStep68 Is Nothing And cExecStep69 Is
Nothing And _
       cExecStep70 Is Nothing And cExecStep71 Is
Nothing And cExecStep72 Is Nothing And cExecStep73 Is
Nothing And cExecStep74 Is Nothing And cExecStep75 Is
Nothing And cExecStep76 Is Nothing And cExecStep77 Is
Nothing And cExecStep78 Is Nothing And cExecStep79 Is
Nothing And _
       cExecStep80 Is Nothing And cExecStep81 Is
Nothing And cExecStep82 Is Nothing And cExecStep83 Is
Nothing And cExecStep84 Is Nothing And cExecStep85 Is
Nothing And cExecStep86 Is Nothing And cExecStep87 Is
Nothing And cExecStep88 Is Nothing And cExecStep89 Is
Nothing And _
       cExecStep90 Is Nothing And cExecStep91 Is
Nothing And cExecStep92 Is Nothing And cExecStep93 Is
Nothing And cExecStep94 Is Nothing And cExecStep95 Is
Nothing And cExecStep96 Is Nothing And cExecStep97 Is
Nothing And cExecStep98 Is Nothing And cExecStep99 Is
Nothing Then
        ' Then...
        WriteToWspLog (mintRunComplete)
        RaiseEvent RunComplete(Determine64BitTime())
    Else
        ' Abort each of the steps that is currently
executing.
        If Not cExecStep1 Is Nothing Then
            cExecStep1.Abort
        End If

        If Not cExecStep2 Is Nothing Then
            cExecStep2.Abort
        End If

        If Not cExecStep3 Is Nothing Then
            cExecStep3.Abort
        End If

        If Not cExecStep4 Is Nothing Then
            cExecStep4.Abort
        End If

        If Not cExecStep5 Is Nothing Then
            cExecStep5.Abort
        End If

        If Not cExecStep6 Is Nothing Then
```


© 2006 Hewlett-Packard Company. All rights reserved.

```
    cExecStep6.Abort
End If

If Not cExecStep7 Is Nothing Then
    cExecStep7.Abort
End If

If Not cExecStep8 Is Nothing Then
    cExecStep8.Abort
End If

If Not cExecStep9 Is Nothing Then
    cExecStep9.Abort
End If

If Not cExecStep10 Is Nothing Then
    cExecStep10.Abort
End If

If Not cExecStep11 Is Nothing Then
    cExecStep11.Abort
End If

If Not cExecStep12 Is Nothing Then
    cExecStep12.Abort
End If

If Not cExecStep13 Is Nothing Then
    cExecStep13.Abort
End If

If Not cExecStep14 Is Nothing Then
    cExecStep14.Abort
End If

If Not cExecStep15 Is Nothing Then
    cExecStep15.Abort
End If

If Not cExecStep16 Is Nothing Then
    cExecStep16.Abort
End If

If Not cExecStep17 Is Nothing Then
    cExecStep17.Abort
End If

If Not cExecStep18 Is Nothing Then
    cExecStep18.Abort
End If

If Not cExecStep19 Is Nothing Then
    cExecStep19.Abort
End If

If Not cExecStep20 Is Nothing Then
    cExecStep20.Abort
End If

If Not cExecStep21 Is Nothing Then
    cExecStep21.Abort
End If

If Not cExecStep22 Is Nothing Then
    cExecStep22.Abort
End If

If Not cExecStep23 Is Nothing Then
    cExecStep23.Abort
End If

If Not cExecStep24 Is Nothing Then
    cExecStep24.Abort
End If

If Not cExecStep25 Is Nothing Then
    cExecStep25.Abort
End If

If Not cExecStep26 Is Nothing Then
    cExecStep26.Abort
End If

If Not cExecStep27 Is Nothing Then
    cExecStep27.Abort
End If

If Not cExecStep28 Is Nothing Then
    cExecStep28.Abort
End If

If Not cExecStep29 Is Nothing Then
    cExecStep29.Abort
End If

' ============== 30 - 39 ==============
If Not cExecStep30 Is Nothing Then
    cExecStep30.Abort
End If

If Not cExecStep31 Is Nothing Then
    cExecStep31.Abort
End If

If Not cExecStep32 Is Nothing Then
    cExecStep32.Abort
End If

If Not cExecStep33 Is Nothing Then
    cExecStep33.Abort
End If

If Not cExecStep34 Is Nothing Then
    cExecStep34.Abort
End If

If Not cExecStep35 Is Nothing Then
    cExecStep35.Abort
End If

If Not cExecStep36 Is Nothing Then
    cExecStep36.Abort
End If

If Not cExecStep37 Is Nothing Then
    cExecStep37.Abort
End If

If Not cExecStep38 Is Nothing Then
    cExecStep38.Abort
End If

If Not cExecStep39 Is Nothing Then
    cExecStep39.Abort
End If

' ============== 40 - 49 ==============
If Not cExecStep40 Is Nothing Then
    cExecStep40.Abort
End If

If Not cExecStep41 Is Nothing Then
    cExecStep41.Abort
End If

If Not cExecStep42 Is Nothing Then
    cExecStep42.Abort
End If

If Not cExecStep43 Is Nothing Then
    cExecStep43.Abort
End If

If Not cExecStep44 Is Nothing Then
    cExecStep44.Abort
End If

If Not cExecStep45 Is Nothing Then
    cExecStep45.Abort
End If

If Not cExecStep46 Is Nothing Then
    cExecStep46.Abort
End If

If Not cExecStep47 Is Nothing Then
    cExecStep47.Abort
End If

If Not cExecStep48 Is Nothing Then
    cExecStep48.Abort
End If

If Not cExecStep49 Is Nothing Then
    cExecStep49.Abort
End If

' ============== 50 - 59 ==============
If Not cExecStep50 Is Nothing Then
    cExecStep50.Abort
End If

If Not cExecStep51 Is Nothing Then
    cExecStep51.Abort
End If

If Not cExecStep52 Is Nothing Then
    cExecStep52.Abort
End If
```


© 2006 Hewlett-Packard Company. All rights reserved.

```
If Not cExecStep53 Is Nothing Then
    cExecStep53.Abort
End If

If Not cExecStep54 Is Nothing Then
    cExecStep54.Abort
End If

If Not cExecStep55 Is Nothing Then
    cExecStep55.Abort
End If

If Not cExecStep56 Is Nothing Then
    cExecStep56.Abort
End If

If Not cExecStep57 Is Nothing Then
    cExecStep57.Abort
End If

If Not cExecStep58 Is Nothing Then
    cExecStep58.Abort
End If

If Not cExecStep59 Is Nothing Then
    cExecStep59.Abort
End If

' ============== 60 - 69 ==============
If Not cExecStep60 Is Nothing Then
    cExecStep60.Abort
End If

If Not cExecStep61 Is Nothing Then
    cExecStep61.Abort
End If

If Not cExecStep62 Is Nothing Then
    cExecStep62.Abort
End If

If Not cExecStep63 Is Nothing Then
    cExecStep63.Abort
End If

If Not cExecStep64 Is Nothing Then
    cExecStep64.Abort
End If

If Not cExecStep65 Is Nothing Then
    cExecStep65.Abort
End If

If Not cExecStep66 Is Nothing Then
    cExecStep66.Abort
End If

If Not cExecStep67 Is Nothing Then
    cExecStep67.Abort
End If

If Not cExecStep68 Is Nothing Then
    cExecStep68.Abort
End If

If Not cExecStep69 Is Nothing Then
    cExecStep69.Abort
End If

' ============== 70 - 79 ==============
If Not cExecStep70 Is Nothing Then
    cExecStep70.Abort
End If

If Not cExecStep71 Is Nothing Then
    cExecStep71.Abort
End If

If Not cExecStep72 Is Nothing Then
    cExecStep72.Abort
End If

If Not cExecStep73 Is Nothing Then
    cExecStep73.Abort
End If

If Not cExecStep74 Is Nothing Then
    cExecStep74.Abort
End If

If Not cExecStep75 Is Nothing Then
    cExecStep75.Abort
End If

If Not cExecStep76 Is Nothing Then
    cExecStep76.Abort
End If

If Not cExecStep77 Is Nothing Then
    cExecStep77.Abort
End If

If Not cExecStep78 Is Nothing Then
    cExecStep78.Abort
End If

If Not cExecStep79 Is Nothing Then
    cExecStep79.Abort
End If

' ============== 80 - 89 ==============
If Not cExecStep80 Is Nothing Then
    cExecStep80.Abort
End If

If Not cExecStep81 Is Nothing Then
    cExecStep81.Abort
End If

If Not cExecStep82 Is Nothing Then
    cExecStep82.Abort
End If

If Not cExecStep83 Is Nothing Then
    cExecStep83.Abort
End If

If Not cExecStep84 Is Nothing Then
    cExecStep84.Abort
End If

If Not cExecStep85 Is Nothing Then
    cExecStep85.Abort
End If

If Not cExecStep86 Is Nothing Then
    cExecStep86.Abort
End If

If Not cExecStep87 Is Nothing Then
    cExecStep87.Abort
End If

If Not cExecStep88 Is Nothing Then
    cExecStep88.Abort
End If

If Not cExecStep89 Is Nothing Then
    cExecStep89.Abort
End If

' ============== 90 - 99 ==============
If Not cExecStep90 Is Nothing Then
    cExecStep90.Abort
End If

If Not cExecStep91 Is Nothing Then
    cExecStep91.Abort
End If

If Not cExecStep92 Is Nothing Then
    cExecStep92.Abort
End If

If Not cExecStep93 Is Nothing Then
    cExecStep93.Abort
End If

If Not cExecStep94 Is Nothing Then
    cExecStep94.Abort
End If

If Not cExecStep95 Is Nothing Then
    cExecStep95.Abort
End If

If Not cExecStep96 Is Nothing Then
    cExecStep96.Abort
End If

If Not cExecStep97 Is Nothing Then
    cExecStep97.Abort
End If

If Not cExecStep98 Is Nothing Then
    cExecStep98.Abort
End If
```


© 2006 Hewlett-Packard Company. All rights reserved.

```
        If Not cExecStep99 Is Nothing Then
            cExecStep99.Abort
        End If

    End If

    Exit Sub

AbortErr:
    Call LogErrors(Errors)
    On Error GoTo 0
    ShowError errAbortFailed
    ' Try to abort the remaining steps, if any
    Resume Next

End Sub
Public Sub AbortSiblings(cTermInstance As cInstance)

    On Error GoTo AbortSiblingsErr

    ' Abort each of the steps that is currently
executing.
    If Not cExecStep1 Is Nothing Then
        If cExecStep1.ExecuteStep.ParentStepId =
cTermInstance.Step.ParentStepId Then
            cExecStep1.Abort
        End If
    End If

    If Not cExecStep2 Is Nothing Then
        If cExecStep2.ExecuteStep.ParentStepId =
cTermInstance.Step.ParentStepId Then
            cExecStep2.Abort
        End If
    End If

    If Not cExecStep3 Is Nothing Then
        If cExecStep3.ExecuteStep.ParentStepId =
cTermInstance.Step.ParentStepId Then
            cExecStep3.Abort
        End If
    End If

    If Not cExecStep4 Is Nothing Then
        If cExecStep4.ExecuteStep.ParentStepId =
cTermInstance.Step.ParentStepId Then
            cExecStep4.Abort
        End If
    End If

    If Not cExecStep5 Is Nothing Then
        If cExecStep5.ExecuteStep.ParentStepId =
cTermInstance.Step.ParentStepId Then
            cExecStep5.Abort
        End If
    End If

    If Not cExecStep6 Is Nothing Then
        If cExecStep6.ExecuteStep.ParentStepId =
cTermInstance.Step.ParentStepId Then
            cExecStep6.Abort
        End If
    End If

    If Not cExecStep7 Is Nothing Then
        If cExecStep7.ExecuteStep.ParentStepId =
cTermInstance.Step.ParentStepId Then
            cExecStep7.Abort
        End If
    End If

    If Not cExecStep8 Is Nothing Then
        If cExecStep8.ExecuteStep.ParentStepId =
cTermInstance.Step.ParentStepId Then
            cExecStep8.Abort
        End If
    End If

    If Not cExecStep9 Is Nothing Then
        If cExecStep9.ExecuteStep.ParentStepId =
cTermInstance.Step.ParentStepId Then
            cExecStep9.Abort
        End If
    End If

    If Not cExecStep10 Is Nothing Then
        If cExecStep10.ExecuteStep.ParentStepId =
cTermInstance.Step.ParentStepId Then
            cExecStep10.Abort
        End If
    End If

    If Not cExecStep11 Is Nothing Then
        If cExecStep11.ExecuteStep.ParentStepId =
cTermInstance.Step.ParentStepId Then
            cExecStep11.Abort
        End If
    End If

    If Not cExecStep12 Is Nothing Then
        If cExecStep12.ExecuteStep.ParentStepId =
cTermInstance.Step.ParentStepId Then
            cExecStep12.Abort
        End If
    End If

    If Not cExecStep13 Is Nothing Then
        If cExecStep13.ExecuteStep.ParentStepId =
cTermInstance.Step.ParentStepId Then
            cExecStep13.Abort
        End If
    End If

    If Not cExecStep14 Is Nothing Then
        If cExecStep14.ExecuteStep.ParentStepId =
cTermInstance.Step.ParentStepId Then
            cExecStep14.Abort
        End If
    End If

    If Not cExecStep15 Is Nothing Then
        If cExecStep15.ExecuteStep.ParentStepId =
cTermInstance.Step.ParentStepId Then
            cExecStep15.Abort
        End If
    End If

    If Not cExecStep16 Is Nothing Then
        If cExecStep16.ExecuteStep.ParentStepId =
cTermInstance.Step.ParentStepId Then
            cExecStep16.Abort
        End If
    End If

    If Not cExecStep17 Is Nothing Then
        If cExecStep17.ExecuteStep.ParentStepId =
cTermInstance.Step.ParentStepId Then
            cExecStep17.Abort
        End If
    End If

    If Not cExecStep18 Is Nothing Then
        If cExecStep18.ExecuteStep.ParentStepId =
cTermInstance.Step.ParentStepId Then
            cExecStep18.Abort
        End If
    End If

    If Not cExecStep19 Is Nothing Then
        If cExecStep19.ExecuteStep.ParentStepId =
cTermInstance.Step.ParentStepId Then
            cExecStep19.Abort
        End If
    End If

    If Not cExecStep20 Is Nothing Then
        If cExecStep20.ExecuteStep.ParentStepId =
cTermInstance.Step.ParentStepId Then
            cExecStep20.Abort
        End If
    End If

    If Not cExecStep21 Is Nothing Then
        If cExecStep21.ExecuteStep.ParentStepId =
cTermInstance.Step.ParentStepId Then
            cExecStep21.Abort
        End If
    End If

    If Not cExecStep22 Is Nothing Then
        If cExecStep22.ExecuteStep.ParentStepId =
cTermInstance.Step.ParentStepId Then
            cExecStep22.Abort
        End If
    End If

    If Not cExecStep23 Is Nothing Then
        If cExecStep23.ExecuteStep.ParentStepId =
cTermInstance.Step.ParentStepId Then
            cExecStep23.Abort
        End If
    End If

    If Not cExecStep24 Is Nothing Then
        If cExecStep24.ExecuteStep.ParentStepId =
cTermInstance.Step.ParentStepId Then
            cExecStep24.Abort
        End If
    End If
```


© 2006 Hewlett-Packard Company. All rights reserved.

```
    If Not cExecStep25 Is Nothing Then
        If cExecStep25.ExecuteStep.ParentStepId =
cTermInstance.Step.ParentStepId Then
            cExecStep25.Abort
        End If
    End If

    If Not cExecStep26 Is Nothing Then
        If cExecStep26.ExecuteStep.ParentStepId =
cTermInstance.Step.ParentStepId Then
            cExecStep26.Abort
        End If
    End If

    If Not cExecStep27 Is Nothing Then
        If cExecStep27.ExecuteStep.ParentStepId =
cTermInstance.Step.ParentStepId Then
            cExecStep27.Abort
        End If
    End If

    If Not cExecStep28 Is Nothing Then
        If cExecStep28.ExecuteStep.ParentStepId =
cTermInstance.Step.ParentStepId Then
            cExecStep28.Abort
        End If
    End If

    If Not cExecStep29 Is Nothing Then
        If cExecStep29.ExecuteStep.ParentStepId =
cTermInstance.Step.ParentStepId Then
            cExecStep29.Abort
        End If
    End If

    ' ============ 30 =================
    If Not cExecStep30 Is Nothing Then
        If cExecStep30.ExecuteStep.ParentStepId =
cTermInstance.Step.ParentStepId Then
            cExecStep30.Abort
        End If
    End If

    If Not cExecStep31 Is Nothing Then
        If cExecStep31.ExecuteStep.ParentStepId =
cTermInstance.Step.ParentStepId Then
            cExecStep31.Abort
        End If
    End If

    If Not cExecStep32 Is Nothing Then
        If cExecStep32.ExecuteStep.ParentStepId =
cTermInstance.Step.ParentStepId Then
            cExecStep32.Abort
        End If
    End If

    If Not cExecStep33 Is Nothing Then
        If cExecStep33.ExecuteStep.ParentStepId =
cTermInstance.Step.ParentStepId Then
            cExecStep33.Abort
        End If
    End If

    If Not cExecStep34 Is Nothing Then
        If cExecStep34.ExecuteStep.ParentStepId =
cTermInstance.Step.ParentStepId Then
            cExecStep34.Abort
        End If
    End If

    If Not cExecStep35 Is Nothing Then
        If cExecStep35.ExecuteStep.ParentStepId =
cTermInstance.Step.ParentStepId Then
            cExecStep35.Abort
        End If
    End If

    If Not cExecStep36 Is Nothing Then
        If cExecStep36.ExecuteStep.ParentStepId =
cTermInstance.Step.ParentStepId Then
            cExecStep36.Abort
        End If
    End If

    If Not cExecStep37 Is Nothing Then
        If cExecStep37.ExecuteStep.ParentStepId =
cTermInstance.Step.ParentStepId Then
            cExecStep37.Abort
        End If
    End If

    If Not cExecStep38 Is Nothing Then
        If cExecStep38.ExecuteStep.ParentStepId =
cTermInstance.Step.ParentStepId Then
            cExecStep38.Abort
        End If
    End If

    If Not cExecStep39 Is Nothing Then
        If cExecStep39.ExecuteStep.ParentStepId =
cTermInstance.Step.ParentStepId Then
            cExecStep39.Abort
        End If
    End If

    ' ============ 40 =================
    If Not cExecStep40 Is Nothing Then
        If cExecStep40.ExecuteStep.ParentStepId =
cTermInstance.Step.ParentStepId Then
            cExecStep40.Abort
        End If
    End If

    If Not cExecStep41 Is Nothing Then
        If cExecStep41.ExecuteStep.ParentStepId =
cTermInstance.Step.ParentStepId Then
            cExecStep41.Abort
        End If
    End If

    If Not cExecStep42 Is Nothing Then
        If cExecStep42.ExecuteStep.ParentStepId =
cTermInstance.Step.ParentStepId Then
            cExecStep42.Abort
        End If
    End If

    If Not cExecStep43 Is Nothing Then
        If cExecStep43.ExecuteStep.ParentStepId =
cTermInstance.Step.ParentStepId Then
            cExecStep43.Abort
        End If
    End If

    If Not cExecStep44 Is Nothing Then
        If cExecStep44.ExecuteStep.ParentStepId =
cTermInstance.Step.ParentStepId Then
            cExecStep44.Abort
        End If
    End If

    If Not cExecStep45 Is Nothing Then
        If cExecStep45.ExecuteStep.ParentStepId =
cTermInstance.Step.ParentStepId Then
            cExecStep45.Abort
        End If
    End If

    If Not cExecStep46 Is Nothing Then
        If cExecStep46.ExecuteStep.ParentStepId =
cTermInstance.Step.ParentStepId Then
            cExecStep46.Abort
        End If
    End If

    If Not cExecStep47 Is Nothing Then
        If cExecStep47.ExecuteStep.ParentStepId =
cTermInstance.Step.ParentStepId Then
            cExecStep47.Abort
        End If
    End If

    If Not cExecStep48 Is Nothing Then
        If cExecStep48.ExecuteStep.ParentStepId =
cTermInstance.Step.ParentStepId Then
            cExecStep48.Abort
        End If
    End If

    If Not cExecStep49 Is Nothing Then
        If cExecStep49.ExecuteStep.ParentStepId =
cTermInstance.Step.ParentStepId Then
            cExecStep49.Abort
        End If
    End If

    ' ============ 50 =================
    If Not cExecStep50 Is Nothing Then
        If cExecStep50.ExecuteStep.ParentStepId =
cTermInstance.Step.ParentStepId Then
            cExecStep50.Abort
        End If
    End If

    If Not cExecStep51 Is Nothing Then
        If cExecStep51.ExecuteStep.ParentStepId =
cTermInstance.Step.ParentStepId Then
```


© 2006 Hewlett-Packard Company. All rights reserved.

```
            cExecStep51.Abort
        End If
    End If

    If Not cExecStep52 Is Nothing Then
        If cExecStep52.ExecuteStep.ParentStepId =
cTermInstance.Step.ParentStepId Then
            cExecStep52.Abort
        End If
    End If

    If Not cExecStep53 Is Nothing Then
        If cExecStep53.ExecuteStep.ParentStepId =
cTermInstance.Step.ParentStepId Then
            cExecStep53.Abort
        End If
    End If

    If Not cExecStep54 Is Nothing Then
        If cExecStep54.ExecuteStep.ParentStepId =
cTermInstance.Step.ParentStepId Then
            cExecStep54.Abort
        End If
    End If

    If Not cExecStep55 Is Nothing Then
        If cExecStep55.ExecuteStep.ParentStepId =
cTermInstance.Step.ParentStepId Then
            cExecStep55.Abort
        End If
    End If

    If Not cExecStep56 Is Nothing Then
        If cExecStep56.ExecuteStep.ParentStepId =
cTermInstance.Step.ParentStepId Then
            cExecStep56.Abort
        End If
    End If

    If Not cExecStep57 Is Nothing Then
        If cExecStep57.ExecuteStep.ParentStepId =
cTermInstance.Step.ParentStepId Then
            cExecStep57.Abort
        End If
    End If

    If Not cExecStep58 Is Nothing Then
        If cExecStep58.ExecuteStep.ParentStepId =
cTermInstance.Step.ParentStepId Then
            cExecStep58.Abort
        End If
    End If

    If Not cExecStep59 Is Nothing Then
        If cExecStep59.ExecuteStep.ParentStepId =
cTermInstance.Step.ParentStepId Then
            cExecStep59.Abort
        End If
    End If

    ' ============ 60 =================
    If Not cExecStep60 Is Nothing Then
        If cExecStep60.ExecuteStep.ParentStepId =
cTermInstance.Step.ParentStepId Then
            cExecStep60.Abort
        End If
    End If

    If Not cExecStep61 Is Nothing Then
        If cExecStep61.ExecuteStep.ParentStepId =
cTermInstance.Step.ParentStepId Then
            cExecStep61.Abort
        End If
    End If

    If Not cExecStep62 Is Nothing Then
        If cExecStep62.ExecuteStep.ParentStepId =
cTermInstance.Step.ParentStepId Then
            cExecStep62.Abort
        End If
    End If

    If Not cExecStep63 Is Nothing Then
        If cExecStep63.ExecuteStep.ParentStepId =
cTermInstance.Step.ParentStepId Then
            cExecStep63.Abort
        End If
    End If

    If Not cExecStep64 Is Nothing Then
        If cExecStep64.ExecuteStep.ParentStepId =
cTermInstance.Step.ParentStepId Then
            cExecStep64.Abort
        End If
    End If

    If Not cExecStep65 Is Nothing Then
        If cExecStep65.ExecuteStep.ParentStepId =
cTermInstance.Step.ParentStepId Then
            cExecStep65.Abort
        End If
    End If

    If Not cExecStep66 Is Nothing Then
        If cExecStep66.ExecuteStep.ParentStepId =
cTermInstance.Step.ParentStepId Then
            cExecStep66.Abort
        End If
    End If

    If Not cExecStep67 Is Nothing Then
        If cExecStep67.ExecuteStep.ParentStepId =
cTermInstance.Step.ParentStepId Then
            cExecStep67.Abort
        End If
    End If

    If Not cExecStep68 Is Nothing Then
        If cExecStep68.ExecuteStep.ParentStepId =
cTermInstance.Step.ParentStepId Then
            cExecStep68.Abort
        End If
    End If

    If Not cExecStep69 Is Nothing Then
        If cExecStep69.ExecuteStep.ParentStepId =
cTermInstance.Step.ParentStepId Then
            cExecStep69.Abort
        End If
    End If

    ' ============ 70 =================
    If Not cExecStep70 Is Nothing Then
        If cExecStep70.ExecuteStep.ParentStepId =
cTermInstance.Step.ParentStepId Then
            cExecStep70.Abort
        End If
    End If

    If Not cExecStep71 Is Nothing Then
        If cExecStep71.ExecuteStep.ParentStepId =
cTermInstance.Step.ParentStepId Then
            cExecStep71.Abort
        End If
    End If

    If Not cExecStep72 Is Nothing Then
        If cExecStep72.ExecuteStep.ParentStepId =
cTermInstance.Step.ParentStepId Then
            cExecStep72.Abort
        End If
    End If

    If Not cExecStep73 Is Nothing Then
        If cExecStep73.ExecuteStep.ParentStepId =
cTermInstance.Step.ParentStepId Then
            cExecStep73.Abort
        End If
    End If

    If Not cExecStep74 Is Nothing Then
        If cExecStep74.ExecuteStep.ParentStepId =
cTermInstance.Step.ParentStepId Then
            cExecStep74.Abort
        End If
    End If

    If Not cExecStep75 Is Nothing Then
        If cExecStep75.ExecuteStep.ParentStepId =
cTermInstance.Step.ParentStepId Then
            cExecStep75.Abort
        End If
    End If

    If Not cExecStep76 Is Nothing Then
        If cExecStep76.ExecuteStep.ParentStepId =
cTermInstance.Step.ParentStepId Then
            cExecStep76.Abort
        End If
    End If

    If Not cExecStep77 Is Nothing Then
        If cExecStep77.ExecuteStep.ParentStepId =
cTermInstance.Step.ParentStepId Then
            cExecStep77.Abort
        End If
    End If
```


© 2006 Hewlett-Packard Company. All rights reserved.

```
    If Not cExecStep78 Is Nothing Then
        If cExecStep78.ExecuteStep.ParentStepId =
cTermInstance.Step.ParentStepId Then
            cExecStep78.Abort
        End If
    End If

    If Not cExecStep79 Is Nothing Then
        If cExecStep79.ExecuteStep.ParentStepId =
cTermInstance.Step.ParentStepId Then
            cExecStep79.Abort
        End If
    End If

    ' ============ 80 =================
    If Not cExecStep80 Is Nothing Then
        If cExecStep80.ExecuteStep.ParentStepId =
cTermInstance.Step.ParentStepId Then
            cExecStep80.Abort
        End If
    End If

    If Not cExecStep81 Is Nothing Then
        If cExecStep81.ExecuteStep.ParentStepId =
cTermInstance.Step.ParentStepId Then
            cExecStep81.Abort
        End If
    End If

    If Not cExecStep82 Is Nothing Then
        If cExecStep82.ExecuteStep.ParentStepId =
cTermInstance.Step.ParentStepId Then
            cExecStep82.Abort
        End If
    End If

    If Not cExecStep83 Is Nothing Then
        If cExecStep83.ExecuteStep.ParentStepId =
cTermInstance.Step.ParentStepId Then
            cExecStep83.Abort
        End If
    End If

    If Not cExecStep84 Is Nothing Then
        If cExecStep84.ExecuteStep.ParentStepId =
cTermInstance.Step.ParentStepId Then
            cExecStep84.Abort
        End If
    End If

    If Not cExecStep85 Is Nothing Then
        If cExecStep85.ExecuteStep.ParentStepId =
cTermInstance.Step.ParentStepId Then
            cExecStep85.Abort
        End If
    End If

    If Not cExecStep86 Is Nothing Then
        If cExecStep86.ExecuteStep.ParentStepId =
cTermInstance.Step.ParentStepId Then
            cExecStep86.Abort
        End If
    End If

    If Not cExecStep87 Is Nothing Then
        If cExecStep87.ExecuteStep.ParentStepId =
cTermInstance.Step.ParentStepId Then
            cExecStep87.Abort
        End If
    End If

    If Not cExecStep88 Is Nothing Then
        If cExecStep88.ExecuteStep.ParentStepId =
cTermInstance.Step.ParentStepId Then
            cExecStep88.Abort
        End If
    End If

    If Not cExecStep89 Is Nothing Then
        If cExecStep89.ExecuteStep.ParentStepId =
cTermInstance.Step.ParentStepId Then
            cExecStep89.Abort
        End If
    End If

    ' ============ 90 =================
    If Not cExecStep90 Is Nothing Then
        If cExecStep90.ExecuteStep.ParentStepId =
cTermInstance.Step.ParentStepId Then
            cExecStep90.Abort
        End If
    End If

    If Not cExecStep91 Is Nothing Then
        If cExecStep91.ExecuteStep.ParentStepId =
cTermInstance.Step.ParentStepId Then
            cExecStep91.Abort
        End If
    End If

    If Not cExecStep92 Is Nothing Then
        If cExecStep92.ExecuteStep.ParentStepId =
cTermInstance.Step.ParentStepId Then
            cExecStep92.Abort
        End If
    End If

    If Not cExecStep93 Is Nothing Then
        If cExecStep93.ExecuteStep.ParentStepId =
cTermInstance.Step.ParentStepId Then
            cExecStep93.Abort
        End If
    End If

    If Not cExecStep94 Is Nothing Then
        If cExecStep94.ExecuteStep.ParentStepId =
cTermInstance.Step.ParentStepId Then
            cExecStep94.Abort
        End If
    End If

    If Not cExecStep95 Is Nothing Then
        If cExecStep95.ExecuteStep.ParentStepId =
cTermInstance.Step.ParentStepId Then
            cExecStep95.Abort
        End If
    End If

    If Not cExecStep96 Is Nothing Then
        If cExecStep96.ExecuteStep.ParentStepId =
cTermInstance.Step.ParentStepId Then
            cExecStep96.Abort
        End If
    End If

    If Not cExecStep97 Is Nothing Then
        If cExecStep97.ExecuteStep.ParentStepId =
cTermInstance.Step.ParentStepId Then
            cExecStep97.Abort
        End If
    End If

    If Not cExecStep98 Is Nothing Then
        If cExecStep98.ExecuteStep.ParentStepId =
cTermInstance.Step.ParentStepId Then
            cExecStep98.Abort
        End If
    End If

    If Not cExecStep99 Is Nothing Then
        If cExecStep99.ExecuteStep.ParentStepId =
cTermInstance.Step.ParentStepId Then
            cExecStep99.Abort
        End If
    End If

    Exit Sub

AbortSiblingsErr:
    Call LogErrors(Errors)
    On Error GoTo 0
    ShowError errAbortFailed
    ' Try to abort the remaining steps, if any
    Resume Next

End Sub
Private Sub ExecutionFailed(cTermStep As cRunStep)
    ' Called when execution of a step fails for any
reason - ensure that execution
    ' continues

    On Error GoTo ExecutionFailedErr

    Call AddFreeProcess(cTermStep.Index)

    Call RunBranch(mstrCurBranchRoot)

    Exit Sub

ExecutionFailedErr:
    ' Log the error code raised by Visual Basic - do
not raise an error here!
    Call LogErrors(Errors)

End Sub
Private Sub FreeExecStep(lngIndex As Long)
    ' Frees an instance of a cExecuteSM object
depending on the index
    On Error GoTo FreeExecStepErr
```


© 2006 Hewlett-Packard Company. All rights reserved.

```
Select Case lngIndex + 1
    Case 1
        Set cExecStep1 = Nothing
    Case 2
        Set cExecStep2 = Nothing
    Case 3
        Set cExecStep3 = Nothing
    Case 4
        Set cExecStep4 = Nothing
    Case 5
        Set cExecStep5 = Nothing
    Case 6
        Set cExecStep6 = Nothing
    Case 7
        Set cExecStep7 = Nothing
    Case 8
        Set cExecStep8 = Nothing
    Case 9
        Set cExecStep9 = Nothing
    Case 10
        Set cExecStep10 = Nothing
    Case 11
        Set cExecStep11 = Nothing
    Case 12
        Set cExecStep12 = Nothing
    Case 13
        Set cExecStep13 = Nothing
    Case 14
        Set cExecStep14 = Nothing
    Case 15
        Set cExecStep15 = Nothing
    Case 16
        Set cExecStep16 = Nothing
    Case 17
        Set cExecStep17 = Nothing
    Case 18
        Set cExecStep18 = Nothing
    Case 19
        Set cExecStep19 = Nothing
    Case 20
        Set cExecStep20 = Nothing
    Case 21
        Set cExecStep21 = Nothing
    Case 22
        Set cExecStep22 = Nothing
    Case 23
        Set cExecStep23 = Nothing
    Case 24
        Set cExecStep24 = Nothing
    Case 25
        Set cExecStep25 = Nothing
    Case 26
        Set cExecStep26 = Nothing
    Case 27
        Set cExecStep27 = Nothing
    Case 28
        Set cExecStep28 = Nothing
    Case 29
        Set cExecStep29 = Nothing
    Case 30
        Set cExecStep30 = Nothing
    Case 31
        Set cExecStep31 = Nothing
    Case 32
        Set cExecStep32 = Nothing
    Case 33
        Set cExecStep33 = Nothing
    Case 34
        Set cExecStep34 = Nothing
    Case 35
        Set cExecStep35 = Nothing
    Case 36
        Set cExecStep36 = Nothing
    Case 37
        Set cExecStep37 = Nothing
    Case 38
        Set cExecStep38 = Nothing
    Case 39
        Set cExecStep39 = Nothing
    Case 40
        Set cExecStep40 = Nothing
    Case 41
        Set cExecStep41 = Nothing
    Case 42
        Set cExecStep42 = Nothing
    Case 43
        Set cExecStep43 = Nothing
    Case 44
        Set cExecStep44 = Nothing
    Case 45
        Set cExecStep45 = Nothing
    Case 46
        Set cExecStep46 = Nothing
    Case 47
        Set cExecStep47 = Nothing
    Case 48
        Set cExecStep48 = Nothing
    Case 49
        Set cExecStep49 = Nothing
    Case 50
        Set cExecStep50 = Nothing
    Case 51
        Set cExecStep51 = Nothing
    Case 52
        Set cExecStep52 = Nothing
    Case 53
        Set cExecStep53 = Nothing
    Case 54
        Set cExecStep54 = Nothing
    Case 55
        Set cExecStep55 = Nothing
    Case 56
        Set cExecStep56 = Nothing
    Case 57
        Set cExecStep57 = Nothing
    Case 58
        Set cExecStep58 = Nothing
    Case 59
        Set cExecStep59 = Nothing
    Case 60
        Set cExecStep60 = Nothing
    Case 61
        Set cExecStep61 = Nothing
    Case 62
        Set cExecStep62 = Nothing
    Case 63
        Set cExecStep63 = Nothing
    Case 64
        Set cExecStep64 = Nothing
    Case 65
        Set cExecStep65 = Nothing
    Case 66
        Set cExecStep66 = Nothing
    Case 67
        Set cExecStep67 = Nothing
    Case 68
        Set cExecStep68 = Nothing
    Case 69
        Set cExecStep69 = Nothing
    Case 70
        Set cExecStep70 = Nothing
    Case 71
        Set cExecStep71 = Nothing
    Case 72
        Set cExecStep72 = Nothing
    Case 73
        Set cExecStep73 = Nothing
    Case 74
        Set cExecStep74 = Nothing
    Case 75
        Set cExecStep75 = Nothing
    Case 76
        Set cExecStep76 = Nothing
    Case 77
        Set cExecStep77 = Nothing
    Case 78
        Set cExecStep78 = Nothing
    Case 79
        Set cExecStep79 = Nothing
    Case 80
        Set cExecStep80 = Nothing
    Case 81
        Set cExecStep81 = Nothing
    Case 82
        Set cExecStep82 = Nothing
    Case 83
        Set cExecStep83 = Nothing
    Case 84
        Set cExecStep84 = Nothing
    Case 85
        Set cExecStep85 = Nothing
    Case 86
        Set cExecStep86 = Nothing
    Case 87
        Set cExecStep87 = Nothing
    Case 88
        Set cExecStep88 = Nothing
    Case 89
        Set cExecStep89 = Nothing
    Case 90
        Set cExecStep90 = Nothing
    Case 91
        Set cExecStep91 = Nothing
    Case 92
        Set cExecStep92 = Nothing
    Case 93
        Set cExecStep93 = Nothing
    Case 94
```


© 2006 Hewlett-Packard Company. All rights reserved.

```
            Set cExecStep94 = Nothing
        Case 95
            Set cExecStep95 = Nothing
        Case 96
            Set cExecStep96 = Nothing
        Case 97
            Set cExecStep97 = Nothing
        Case 98
            Set cExecStep98 = Nothing
        Case 99
            Set cExecStep99 = Nothing
        Case Else
            BugAssert False, "FreeExecStep: Invalid
index value!"
    End Select

    Exit Sub

FreeExecStepErr:
    ' Log the error code raised by Visual Basic
    Call LogErrors(Errors)

End Sub
Private Sub ProcessAskFailures()
    ' This procedure is called when a step with a
continuation criteria = Ask has failed.
    ' Wait for all running processes to complete
before displaying an Abort/Retry/Fail
    ' message to the user. We process every Ask step
that has failed and use a simple
    ' algorithm to determine what to do next.
    ' 1. An abort response to any failure results in
an immediate abort of the run
    ' 2. A continue means the run continues - this
failure is popped off the failure list.
    ' 3. A retry means that the execution details for
the instance are cleared and the
    '    step is re-executed.
    Dim lIndex As Long
    Dim cStepRec As cStep
    Dim cNextInst As cInstance
    Dim cFailureRec As cFailedStep

    On Error GoTo ProcessAskFailuresErr

    ' Display a popup message for all steps that have
failed with a continuation
    ' criteria of Ask
    For lIndex = mcFailures.Count - 1 To 0 Step -1

        Set cFailureRec = mcFailures(lIndex)

        If cFailureRec.ContCriteria =
gintOnFailureAsk Then
            Set cStepRec =
mcRunSteps.QueryStep(cFailureRec.StepId)
            ' Ask the user whether to
abort/retry/continue
            #If RUN_ONLY Then
                cFailureRec.AskResponse =
ShowMessageBox(0, _
                        "Step '" &
GetStepNodeText(cStepRec) & "' failed. " & _
                        "Select Abort to abort run
and Ignore to continue. " & _
                        "Select Retry to re-execute
the failed step.", _
                        "Step Failure", _
                        MB_ABORTRETRYIGNORE +
MB_APPLMODAL + MB_ICONEXCLAMATION)
            #Else
                cFailureRec.AskResponse =
ShowMessageBox(frmRunning.hWnd, _
                        "Step '" &
GetStepNodeText(cStepRec) & "' failed. " & _
                        "Select Abort to abort run
and Ignore to continue. " & _
                        "Select Retry to re-execute
the failed step.", _
                        "Step Failure", _
                        MB_ABORTRETRYIGNORE +
MB_APPLMODAL + MB_ICONEXCLAMATION)
            #End If

            ' Process an abort response immediately
            If cFailureRec.AskResponse = IDABORT Then
                mblnAbort = True
                Set cNextInst =
mcInstances.QueryInstance(cFailureRec.InstanceId)
                Call RunPendingSiblings(cNextInst,
cFailureRec.EndTime)
                Exit For
            End If
        End If

    Next lIndex

    ' Process all failed steps for which we have
Ignore and Retry responses.
    If Not mblnAbort Then
        ' Navigate in reverse order since we'll be
deleting items from the collection
        For lIndex = mcFailures.Count - 1 To 0 Step -
1
            If mcFailures(lIndex).ContCriteria =
gintOnFailureAsk Then
                mblnAsk = False
                Set cFailureRec =
mcFailures.Delete(lIndex)

                Select Case cFailureRec.AskResponse
                    Case IDABORT
                        BugAssert True

                    Case IDRETRY
                        ' Delete all instances for
the failed step and re-try
                        ' Returns a parent instance
reference
                        Set cNextInst =
ProcessRetryStep(cFailureRec)
                        Call
RunPendingStepInBranch(mstrCurBranchRoot, cNextInst)

                    Case IDIGNORE
                        Set cNextInst =
mcInstances.QueryInstance(cFailureRec.InstanceId)
                        Call
RunPendingSiblings(cNextInst, cFailureRec.EndTime)

                End Select
            End If
        Next lIndex
    End If

    Exit Sub

ProcessAskFailuresErr:
    ' Log the error code raised by Visual Basic
    Call LogErrors(Errors)
    Err.Raise vbObjectError + errExecuteBranchFailed,
mstrModuleName, _
            LoadResString(errExecuteBranchFailed)

End Sub
Private Function ProcessRetryStep(cFailureRec As
cFailedStep) As cInstance
    ' This procedure is called when a step with a
continuation criteria = Ask has failed
    ' and the user wants to re-execute the step.
    ' We delete all existing instances for the step
and reset the iterator, if
    ' any on the parent instance - this way we ensure
that the step will be executed
    ' in the next pass.
    Dim lIndex As Long
    Dim cParentInstance As cInstance
    Dim cSubStepRec As cSubStep
    Dim cStepRec As cStep

    On Error GoTo ProcessRetryStepErr

    ' Navigate in reverse order since we'll be
deleting items from the collection
    For lIndex = mcInstances.Count - 1 To 0 Step -1

        If mcInstances(lIndex).Step.StepId =
cFailureRec.StepId Then
            Set cParentInstance =
mcInstances.QueryInstance(mcInstances(lIndex).ParentI
nstanceId)
            Set cSubStepRec =
cParentInstance.QuerySubStep(cFailureRec.StepId)
            Set cStepRec =
mcRunSteps.QueryStep(cFailureRec.StepId)

            ' Decrement the child count on the parent
instance and reset the
            ' step iterators on the sub-step record,
if any -
            ' all the iterations of the step will be
re-executed.
            cParentInstance.ChildDeleted
cFailureRec.StepId
            cParentInstance.AllComplete = False
            cParentInstance.AllStarted = False
```


© 2006 Hewlett-Packard Company. All rights reserved.

```
            cSubStepRec.InitializeIt cStepRec,
mcParameters

            ' Now delete the current instance
            Set ProcessRetryStep =
mcInstances.Delete(lIndex)
        End If
    Next lIndex

    Exit Function

ProcessRetryStepErr:
    ' Log the error code raised by Visual Basic
    Call LogErrors(Errors)
    Err.Raise vbObjectError + errExecuteBranchFailed,
mstrModuleName, _
            LoadResString(errExecuteBranchFailed)

End Function


Private Sub RunNextStep(ByVal dtmCompleteTime As
Currency, ByVal lngIndex As Long, _
        ByVal InstanceId As Long, ByVal
ExecutionStatus As InstanceStatus)
    ' Checks if there are any steps remaining to be
    ' executed in the current branch. If so, it
executes
    ' the step.
    Dim cTermInstance As cInstance
    Dim cFailure As cFailedStep

    On Error GoTo RunNextStepErr

    BugMessage "RunNextStep: cExecStep" &
CStr(lngIndex + 1) & " has completed."

    Call mcTermSteps.Delete
    Call FreeExecStep(lngIndex)

    ' Call a procedure to add the freed up object to
the list
    Call AddFreeProcess(lngIndex)

    Set cTermInstance =
mcInstances.QueryInstance(InstanceId)
    cTermInstance.Status = ExecutionStatus

    If ExecutionStatus = gintFailed Then
        If cTermInstance.Step.ContinuationCriteria =
gintOnFailureAbortSiblings Then
            Call AbortSiblings(cTermInstance)
        End If

        If Not
mcFailures.StepFailed(cTermInstance.Step.StepId) Then
            Set cFailure = New cFailedStep
            cFailure.InstanceId =
cTermInstance.InstanceId
            cFailure.StepId =
cTermInstance.Step.StepId
            cFailure.ParentStepId =
cTermInstance.Step.ParentStepId
            cFailure.ContCriteria =
cTermInstance.Step.ContinuationCriteria
            cFailure.EndTime = dtmCompleteTime
            mcFailures.Add cFailure
            Set cFailure = Nothing
        End If
    End If

    If ExecutionStatus = gintFailed And
cTermInstance.Step.ContinuationCriteria =
gintOnFailureAbort Then
        If StringEmpty(msAbortDtls) Then
            ' Initialize the abort message
            msAbortDtls = "Step '" &
GetStepNodeText(cTermInstance.Step) & "' failed. " &
_
                    "Aborting execution. Please check
the error file for details."
        End If
        Call Abort
    ElseIf ExecutionStatus = gintFailed And
cTermInstance.Step.ContinuationCriteria =
gintOnFailureAsk Then
        mblnAsk = True

        ' If the step failed due to a Cancel
operation (Abort), abort the run
        If mblnAbort Then
            Call RunPendingSiblings(cTermInstance,
dtmCompleteTime)
        End If
    Else
        Call RunPendingSiblings(cTermInstance,
dtmCompleteTime)
    End If

    If mblnAbort Then
        If Not AnyStepRunning(mcFreeSteps, mbarrFree)
And Not StringEmpty(msAbortDtls) Then
            ' Display an error only if the abort is
due to a failure
            ' We had to abort since a step failed -
since no other steps are currently
            ' running, we can display a message to
the user saying that we had to abort
            #If RUN_ONLY Then
                Call ShowMessageBox(0, msAbortDtls,
"Run Aborted", _
                        MB_APPLMODAL + MB_OK +
MB_ICONEXCLAMATION)
            #Else
                Call ShowMessageBox(frmRunning.hWnd,
msAbortDtls, "Run Aborted", _
                        MB_APPLMODAL + MB_OK +
MB_ICONEXCLAMATION)
            #End If
'            MsgBox msAbortDtls, vbOKOnly, "Run
Aborted"
        End If
    ElseIf mblnAsk Then
        If Not AnyStepRunning(mcFreeSteps, mbarrFree)
Then
            ' Ask the user whether to
abort/retry/ignore failed steps
            Call ProcessAskFailures
        End If
    End If

    Exit Sub

RunNextStepErr:
    ' Log the error code raised by Visual Basic
    Call LogErrors(Errors)
    WriteError errExecuteBranchFailed, mstrSource
    Call ResetForm(lngIndex)

End Sub
Public Sub StopRun()

    ' Setting the Abort flag to True will ensure that
we
    ' don't execute any more steps
    mblnAbort = True

End Sub

Private Sub CreateDummyInstance(strRootKey As String)

    Dim cNewInstance As cInstance
    Dim cSubStepDtls  As cStep
    Dim lngSubStepId As Long

    On Error GoTo CreateDummyInstanceErr

    ' Create a new instance of the step
    ' initialize substeps for the step
    Set cNewInstance = New cInstance

    ' There can be multiple iterations of the top
level nodes
    ' running at the same time, but only one branch
at any
    ' time - so enforce a degree of parallelism of 1
on this
    ' node!
    Set cNewInstance.Step = New cStep
    cNewInstance.DegreeParallelism = 1
    cNewInstance.Key = mstrDummyRootKey

    cNewInstance.InstanceId = NewInstanceId
    cNewInstance.ParentInstanceId = 0

    lngSubStepId = MakeIdentifierValid(strRootKey)

    Set cSubStepDtls =
mcRunSteps.QueryStep(lngSubStepId)
    If cSubStepDtls.EnabledFlag Then
        ' Create a child node for the step
corresponding to
        ' the root node of the branch being currently
executed,
        ' only if it has been enabled
        Call cNewInstance.CreateSubStep(cSubStepDtls,
mcParameters)
    End If
```


© 2006 Hewlett-Packard Company. All rights reserved.

```
    mcInstances.Add cNewInstance
    Set cNewInstance.Iterators =
DetermineIterators(cNewInstance)

    ' Set a reference to the newly created dummy
instance
    Set mcDummyRootInstance = cNewInstance

    Set cNewInstance = Nothing

    Exit Sub

CreateDummyInstanceErr:
    ' Log the error code raised by Visual Basic
    Call LogErrors(Errors)
    On Error GoTo 0
    mstrSource = mstrModuleName &
"CreateDummyInstance"
    Err.Raise vbObjectError +
errCreateInstanceFailed, _
            mstrSource,
LoadResString(errCreateInstanceFailed)

End Sub
Private Function CreateInstance(cExecStep As cStep, _
        cParentInstance As cInstance) As cInstance
    ' Creates a new instance of the passed in step.
Returns
    ' a reference to the newly created instance
object.

    Dim cNewInstance As cInstance
    Dim nodChild As cStep
    Dim lngSubStepId As Long

    On Error GoTo CreateInstanceErr

    ' Create a new instance of the step
    ' initialize substeps for the step
    Set cNewInstance = New cInstance
    Set cNewInstance.Step = cExecStep
    cNewInstance.Key = MakeKeyValid(cExecStep.StepId,
cExecStep.StepType)
    cNewInstance.ParentInstanceId =
cParentInstance.InstanceId
    cNewInstance.InstanceId = NewInstanceId
    ' Validate the degree of parallelism field before
assigning it to the instance -
    ' (the parameter value might have been set to an
invalid value at runtime)
    Call
ValidateParallelism(cExecStep.DegreeParallelism, _
            cExecStep.WorkspaceId,
ParamsInWsp:=mcParameters)
    cNewInstance.DegreeParallelism =
SubstituteParameters(cExecStep.DegreeParallelism, _
            cExecStep.WorkspaceId,
WspParameters:=mcParameters)

    If mcNavSteps.HasChild(StepKey:=cNewInstance.Key)
Then
        Set nodChild =
mcNavSteps.ChildStep(StepKey:=cNewInstance.Key)
        Do
            If nodChild.EnabledFlag Then
                ' Create nodes for all it's substeps
only
                ' if the substeps have been enabled
                Call
cNewInstance.CreateSubStep(nodChild, mcParameters)
            End If

            Set nodChild =
mcNavSteps.NextStep(StepId:=nodChild.StepId)
        Loop While (Not nodChild Is Nothing)
    End If

    mcInstances.Add cNewInstance
    Set cNewInstance.Iterators =
DetermineIterators(cNewInstance)

    ' Increment the number of executing steps on the
parent
    cParentInstance.ChildExecuted (cExecStep.StepId)

    Set CreateInstance = cNewInstance

    Exit Function

CreateInstanceErr:
    ' Log the error code raised by Visual Basic
    Call LogErrors(Errors)
    On Error GoTo 0
    mstrSource = mstrModuleName & "CreateInstance"
    Err.Raise vbObjectError +
errCreateInstanceFailed, _
            mstrSource,
LoadResString(errCreateInstanceFailed)

End Function
Private Function DetermineIterators(cInstanceRec As
cInstance) As cRunColIt
    ' Returns a collection of all the iterator values
for this
    ' instance - since an iterator that is defined at
a
    ' particular level can be used in all it's
substeps, we
    ' need to navigate the step tree all the way to
the root

    Dim cRunIts As cRunColIt
    Dim cRunIt As cRunItNode
    Dim cStepIt As cIterator
    Dim cParentInst As cInstance
    Dim cSubStepRec As cSubStep
    Dim cSubStepDtls As cStep
    Dim lngSubStepId As Long
    Dim lngIndex As Long

    On Error GoTo DetermineIteratorsErr

    Set cRunIts = New cRunColIt

    If cInstanceRec.ParentInstanceId > 0 Then
        ' The last iterator for an instance of a step
is stored
        ' on it's parent! So navigate up before
beginning the
        ' search for iterator values.
        Set cParentInst =
mcInstances.QueryInstance(cInstanceRec.ParentInstance
Id)

        ' Get the sub-step record for the current
step
        ' on it's parent's instance!
        lngSubStepId = cInstanceRec.Step.StepId
        Set cSubStepRec =
cParentInst.QuerySubStep(lngSubStepId)
        Set cSubStepDtls =
mcRunSteps.QueryStep(lngSubStepId)

        ' And determine the next iteration value for
the
        ' substep in this instance
        Set cStepIt =
cSubStepRec.NewIteration(cSubStepDtls)

        If Not cStepIt Is Nothing Then
            ' Add the iterator details to the
collection since
            ' an iterator has been defined for the
step
            Set cRunIt = New cRunItNode
            cRunIt.IteratorName =
cSubStepDtls.IteratorName
            cRunIt.Value =
SubstituteParameters(cStepIt.Value,
cSubStepDtls.WorkspaceId,
WspParameters:=mcParameters)
            cRunIt.StepId = cSubStepRec.StepId
            cRunIts.Push cRunIt
        End If

        ' Since the parent instance has all the
iterators upto
        ' that level, read them and push them on to
the stack for
        ' this instance
        For lngIndex = 0 To
cParentInst.Iterators.Count - 1
            Set cRunIt =
cParentInst.Iterators(lngIndex)
            cRunIts.Push cRunIt
        Next lngIndex
    End If

    Set DetermineIterators = cRunIts

    Exit Function

DetermineIteratorsErr:
    ' Log the error code raised by Visual Basic
    Call LogErrors(Errors)
    On Error GoTo 0
```


© 2006 Hewlett-Packard Company. All rights reserved.

```
    mstrSource = mstrModuleName &
"DetermineIterators"
    Err.Raise vbObjectError + errExecInstanceFailed,
_
            mstrSource,
LoadResString(errExecInstanceFailed)

End Function
Private Function DetermineConstraints(cInstanceRec As
cInstance, _
        intConsType As ConstraintType) As Variant
    ' Returns a collection of all the constraints for
this
    ' instance of the passed in type - all the
constraints defined
    ' for the manager are executed first, followed by
those defined
    ' for the step. If a step has an iterator defined
for it, each
    ' constraint is executed only once.

    Dim cParentInst As cInstance
    Dim cTempInst As cInstance
    Dim vntConstraints As Variant
    Dim vntTempCons As Variant
    Dim cColConstraints() As Variant
    Dim lngConsCount As Long

    On Error GoTo DetermineConstraintsErr

    Set cTempInst = cInstanceRec
    lngConsCount = 0

    ' Go all the way to the root
    Do
        If cTempInst.ParentInstanceId > 0 Then
            Set cParentInst =
mcInstances.QueryInstance(cTempInst.ParentInstanceId)
        Else
            Set cParentInst = Nothing
        End If

        ' Check if the step has an iterator defined
for it
        If cTempInst.ValidForIteration(cParentInst,
intConsType) Then
            vntTempCons =
mcRunConstraints.ConstraintsForStep( _
                    cTempInst.Step.StepId,
cTempInst.Step.VersionNo, _
                    intConsType, blnSort:=True, _
                    blnGlobal:=False,
blnGlobalConstraintsOnly:=False)

            If Not IsEmpty(vntTempCons) Then
                ReDim Preserve
cColConstraints(lngConsCount)
                cColConstraints(lngConsCount) =
vntTempCons
                lngConsCount = lngConsCount + 1
            End If
        End If
        Set cTempInst = cParentInst

    Loop While Not cTempInst Is Nothing

    If lngConsCount > 0 Then
        vntTempCons =
OrderConstraints(cColConstraints, intConsType)
    End If

    DetermineConstraints = vntTempCons

    Exit Function

DetermineConstraintsErr:
    ' Log the error code raised by Visual Basic
    Call LogErrors(Errors)
    On Error GoTo 0
    mstrSource = mstrModuleName &
"DetermineConstraints"
    Err.Raise vbObjectError + errExecInstanceFailed,
_
            mstrSource,
LoadResString(errExecInstanceFailed)

End Function
Private Function GetInstanceToExecute(cParentNode As
cInstance, _
        cSubStepRec As cSubStep, _
        cSubStepDtls As cStep) As cInstance

    Dim cSubStepInst As cInstance

    On Error GoTo GetInstanceToExecuteErr

    BugAssert Not (cParentNode Is Nothing Or _
            cSubStepRec Is Nothing Or _
            cSubStepDtls Is Nothing), _
            "GetInstanceToExecute: Input invalid"

    ' Check if it has iterators
    If cSubStepDtls.IteratorCount = 0 Then
        ' Check if the step has been executed
        If cSubStepRec.TasksRunning = 0 And
cSubStepRec.TasksComplete = 0 And _
                Not
mcInstances.CompletedInstanceExists(cParentNode.Insta
nceId, cSubStepDtls) Then
            ' The sub-step hasn't been executed yet.
            ' Create an instance for it and exit
            Set cSubStepInst =
CreateInstance(cSubStepDtls, cParentNode)
        Else
            Set cSubStepInst = Nothing
        End If
    Else
        ' Check if there are pending iterations for
the sub-step
        If Not
cSubStepRec.NextIteration(cSubStepDtls) Is Nothing
Then
            ' Pending iterations exist - create an
instance for the sub-step and exit
            Set cSubStepInst =
CreateInstance(cSubStepDtls, cParentNode)
        Else
            ' No more iterations - continue with the
next substep
            Set cSubStepInst = Nothing
        End If
    End If

    Set GetInstanceToExecute = cSubStepInst
    Exit Function

GetInstanceToExecuteErr:
    ' Log the error code raised by Visual Basic
    Call LogErrors(Errors)
    On Error GoTo 0
    mstrSource = mstrModuleName &
"GetInstanceToExecute"
    Err.Raise vbObjectError + errNavInstancesFailed,
_
            mstrSource,
LoadResString(errNavInstancesFailed)

End Function

Public Function InstancesForStep(lngStepId As Long,
ByRef StepStatus As InstanceStatus) As cInstances
    ' Returns an array of all the instances for a
step
    Dim lngIndex As Long
    Dim cTempInst As cInstance
    Dim cStepInstances As cInstances
    Dim cStepRec As cStep

    On Error GoTo InstancesForStepErr

    Set cStepInstances = New cInstances

    For lngIndex = 0 To mcInstances.Count - 1
        Set cTempInst = mcInstances(lngIndex)

        If cTempInst.Step.StepId = lngStepId Then
            cStepInstances.Add cTempInst
        End If
    Next lngIndex

    If cStepInstances.Count = 0 Then
        Set cStepRec =
mcRunSteps.QueryStep(lngStepId)
        If Not
mcFailures.ExecuteSubStep(cStepRec.ParentStepId) Then
            StepStatus = gintAborted
        End If
        Set cStepRec = Nothing
    End If

    ' Set the return value of the function to the
array of
    ' constraints that has been built above
    Set InstancesForStep = cStepInstances

    Set cStepInstances = Nothing
    Exit Function
```


© 2006 Hewlett-Packard Company. All rights reserved.

```
InstancesForStepErr:
    ' Log the error code raised by Visual Basic
    Call LogErrors(Errors)
    On Error GoTo 0
    mstrSource = mstrModuleName & "InstancesForStep"
    Err.Raise vbObjectError + errNavInstancesFailed,
mstrSource, _
            LoadResString(errNavInstancesFailed)

End Function
Private Sub RemoveFreeProcess(lngRunningProcess As
Long)
    ' Removes the passed in element from the
collection of
    ' free objects

    ' Confirm that the last element in the array is
the one
    ' we need to delete
    If mcFreeSteps(mcFreeSteps.Count - 1) =
lngRunningProcess Then
        mcFreeSteps.Delete
Position:=mcFreeSteps.Count - 1
    Else
        ' Ask the class to find the element and
delete it
        mcFreeSteps.Delete Item:=lngRunningProcess
    End If

End Sub
Private Sub AddFreeProcess(lngTerminatedProcess As
Long)
    ' Adds the passed in element to the collection of
    ' free objects

    mcFreeSteps.Add lngTerminatedProcess

End Sub

Private Sub ResetForm(Optional ByVal lngIndex As
Long)

    Dim lngTemp As Long

    On Error GoTo ResetFormErr

    ' Check if there are any running instances to
wait for
    If mcFreeSteps.Count <>
glngNumConcurrentProcesses Then

        For lngTemp = 0 To mcFreeSteps.Count - 1
            If mcFreeSteps(lngTemp) = lngIndex Then
                Exit For
            End If
        Next lngTemp

        If lngTemp <= mcFreeSteps.Count - 1 Then
            ' This process that just completed did
not exist in the list of
            ' free processes
            Call AddFreeProcess(lngIndex)
        End If

        If Not AnyStepRunning(mcFreeSteps, mbarrFree)
Then
            WriteToWspLog (mintRunComplete)
            ' All steps are complete
            RaiseEvent
RunComplete(Determine64BitTime())
        End If
    Else
        WriteToWspLog (mintRunComplete)
        RaiseEvent RunComplete(Determine64BitTime())
    End If

    Exit Sub

ResetFormErr:

End Sub
Private Function NewInstanceId() As Long
    ' Will return new instance id's - uses a static
counter
    ' that it increments each time
    Static lngInstance As Long

    lngInstance = lngInstance + 1
    NewInstanceId = lngInstance

End Function

Private Function
RunPendingStepInBranch(strCurBranchRoot As String, _
        Optional cExecInstance As cInstance =
Nothing) As cInstance
    ' Runs a worker step in the branch being
executed, if
    ' there are any pending execution
    ' This function is also called when a step has
just completed
    ' execution - in which case the terminated
instance is
    ' passed in as the optional parameter. When that
happens,
    ' we first try to execute the siblings of the
terminated
    ' step if any are pending execution.
    ' If the terminated instance has not been passed
in, we
    ' start with the dummy root instance and navigate
down,
    ' trying to find a pending worker step.

    Dim cExecSubStep As cStep
    Dim cParentInstance As cInstance
    Dim cNextInst As cInstance

    On Error GoTo RunPendingStepInBranchErr

    If Not cExecInstance Is Nothing Then
        ' Called when an instance has terminated
        ' When a worker step terminates, then we need
to
        ' decremement the number of running steps on
it's
        ' manager
        Set cParentInstance = _

mcInstances.QueryInstance(cExecInstance.ParentInstanc
eId)

    Else
        If StringEmpty(strCurBranchRoot) Or
mcDummyRootInstance Is Nothing Then
            ' Run complete - event raised by Run
method
            Set RunPendingStepInBranch = Nothing
            Exit Function
        End If

        ' If there are no pending steps on the root
instance,
        ' then there are no steps within the branch
that need
        ' to be executed
        If mcDummyRootInstance.AllComplete Or
mcDummyRootInstance.AllStarted Then
            Set RunPendingStepInBranch = Nothing
            Exit Function
        End If

        Set cParentInstance = mcDummyRootInstance
    End If

    Do
        Set cNextInst =
GetSubStepToExecute(cParentInstance)
        If cNextInst Is Nothing Then
            ' There are no steps within the branch
that can
            ' be executed - If we are at the dummy
instance,
            ' this branch has completed executing
            If cParentInstance.Key = mstrDummyRootKey
Then
                Set cNextInst = Nothing
                Exit Do
            Else
                ' Go to the parent instance and try
to find
                ' some other sibling is pending
execution
                Set cNextInst =
mcInstances.QueryInstance(cParentInstance.ParentInsta
nceId)

                If cParentInstance.SubSteps.Count = 0
Then
                    cNextInst.ChildTerminated
cParentInstance.Step.StepId
                End If
            End If
        End If

        BugAssert Not cNextInst Is Nothing
        Set cParentInstance = cNextInst
```


© 2006 Hewlett-Packard Company. All rights reserved.

```
    Loop While cNextInst.Step.StepType <>
gintWorkerStep

    If Not cNextInst Is Nothing Then
        Call ExecuteStep(cNextInst)
    End If

    Set RunPendingStepInBranch = cNextInst

    Exit Function

RunPendingStepInBranchErr:
    ' Log the error code raised by Visual Basic
    Call LogErrors(Errors)
    On Error GoTo 0
    Err.Raise vbObjectError + errNavInstancesFailed,
_
            mstrModuleName &
"RunPendingStepInBranch",
LoadResString(errNavInstancesFailed)

End Function
Private Function RunPendingSibling(cTermInstance As
cInstance, _
        dtmCompleteTime As Currency) As cInstance
    ' This process is called when a step terminates.
Tries to
    ' run a sibling of the terminated step, if one is
pending
    ' execution.

    Dim cParentInstance As cInstance
    Dim cNextInst As cInstance

    On Error GoTo RunPendingSiblingErr

    If StringEmpty(mstrCurBranchRoot) Or
mcDummyRootInstance Is Nothing Then
        ' Run complete - event raised by Run method
        Set RunPendingSibling = Nothing
        Exit Function
    End If

    BugAssert cTermInstance.ParentInstanceId > 0,
"Orphaned instance in array!"

    ' When a worker step terminates, then we need to
    ' decremement the number of running steps on it's
    ' manager
    Set cParentInstance =
mcInstances.QueryInstance(cTermInstance.ParentInstanc
eId)

    ' Decrement the number of running processes on
the
    ' parent by 1
    Call
cParentInstance.ChildTerminated(cTermInstance.Step.St
epId)

    ' The first step that terminates has to be a
worker
    ' If it is complete, update the completed steps
on the
    ' parent by 1.
    Call
cParentInstance.ChildCompleted(cTermInstance.Step.Ste
pId)
    cParentInstance.AllStarted = False

    Do
        Set cNextInst =
GetSubStepToExecute(cParentInstance, dtmCompleteTime)
        If cNextInst Is Nothing Then
            If cParentInstance.Key = mstrDummyRootKey
Then
                Set cNextInst = Nothing
                Exit Do
            Else
                ' Go to the parent instance and try
to find
                ' some other sibling is pending
execution
                Set cNextInst =
mcInstances.QueryInstance(cParentInstance.ParentInsta
nceId)
                If cParentInstance.IsRunning Then
                    cNextInst.AllStarted = True
                Else
                    ' No more sub-steps to execute
                    Call
cNextInst.ChildCompleted(cParentInstance.Step.StepId)
                    Call
cNextInst.ChildTerminated(cParentInstance.Step.StepId
)
                    cNextInst.AllStarted = False
                End If
            End If
        End If

        BugAssert Not cNextInst Is Nothing
        Set cParentInstance = cNextInst

    Loop While cNextInst.Step.StepType <>
gintWorkerStep

    If Not cNextInst Is Nothing Then
        Call ExecuteStep(cNextInst)
    End If

    Set RunPendingSibling = cNextInst

    Exit Function

RunPendingSiblingErr:
    ' Log the error code raised by Visual Basic
    Call LogErrors(Errors)
    On Error GoTo 0
    mstrSource = mstrModuleName & "RunPendingSibling"
    Err.Raise vbObjectError + errNavInstancesFailed,
mstrSource, _
        LoadResString(errNavInstancesFailed)

End Function

Private Sub RunPendingSiblings(cTermInstance As
cInstance, _
        dtmCompleteTime As Currency)
    ' This process is called when a step terminates.
Tries to
    ' run siblings of the terminated step, if they
are pending
    ' execution.

    Dim cExecInst As cInstance

    On Error GoTo RunPendingSiblingsErr
    BugMessage "In RunPendingSiblings"

    ' Call a procedure to run the sibling of the
terminated
    ' step, if any. This procedure will also update
the
    ' number of complete/running tasks on the manager
steps.
    Set cExecInst = RunPendingSibling(cTermInstance,
dtmCompleteTime)

    If Not cExecInst Is Nothing Then
        Do
            ' Execute any other pending steps in the
branch.
            ' The step that has just terminated might
be
            ' the last one that was executing in a
sub-branch.
            ' That would mean that we can execute
another
            ' sub-branch that might involve more than
1 step.
            ' Pass the just executed step as a
parameter.
            Set cExecInst =
RunPendingStepInBranch(mstrCurBranchRoot, cExecInst)
        Loop While Not cExecInst Is Nothing
    Else
        If Not mcDummyRootInstance.IsRunning Then
            ' All steps have been executed in the
branch - run
            ' a new branch
            Call RunNewBranch
        Else
            ' There are no more steps to execute in
the current
            ' branch but we have running processes.
        End If
    End If

    Exit Sub

RunPendingSiblingsErr:
    ' Log the error code raised by Visual Basic
    Call LogErrors(Errors)
    On Error GoTo 0
    mstrSource = mstrModuleName &
"RunPendingSiblings"
    Err.Raise vbObjectError + errNavInstancesFailed,
_
```


© 2006 Hewlett-Packard Company. All rights reserved.

```
            mstrSource,
LoadResString(errNavInstancesFailed)

End Sub

Private Sub NoSubStepsToExecute(cMgrInstance As
cInstance, Optional dtmCompleteTime As Currency =
gdtmEmpty)
    ' Called when we cannot find any more substeps to
run for
    ' manager step - set the allcomplete or
allstarted
    ' properties to true

    If cMgrInstance.IsRunning() Then
        cMgrInstance.AllStarted = True
    Else
        cMgrInstance.AllComplete = True
        If dtmCompleteTime <> gdtmEmpty Then
            ' Update the end time on the manager step
            Call
TimeCompleteUpdateForStep(cMgrInstance,
dtmCompleteTime)
        End If
    End If

End Sub

Private Function GetSubStepToExecute(cParentNode As
cInstance, _
        Optional dtmCompleteTime As Currency = 0) As
cInstance
    ' Returns the child of the passed in node that is
to be
    ' executed next. Checks if we are in the middle
of an instance
    ' being executed in which case it returns the
pending
    ' instance. Creates a new instance if there are
pending
    ' instances for a sub-step.

    Dim lngIndex As Long
    Dim cSubStepRec As cSubStep
    Dim cSubStepDtls As cStep
    Dim cSubStepInst As cInstance

    On Error GoTo GetSubStepToExecuteErr

    ' There are a number of cases that need to be
accounted
    ' for here.
    ' 1. While traversing through all enabled nodes
for the
    ' first time - instance records may not exist for
the
    ' substeps.
    ' 2. Instance records exist, and there are
processes
    ' that need to be executed for a sub-step
    ' 3. There are no more processes that need to be
currently
    ' executed (till a process completes)
    ' 4. There are no more processes that need to be
executed
    ' (All substeps have completed execution)

    ' This is the only point where we check the Abort
flag -
    ' since this is the heart of the navigation
routine that
    ' selects processes to execute. Also, when a step
terminates
    ' selection of the next process goes through
here.
    If mblnAbort Then
        Set GetSubStepToExecute = Nothing
        cParentNode.Status = gintAborted
        Exit Function
    End If

    If mblnAsk Then
        Set GetSubStepToExecute = Nothing
        Exit Function
    End If

    If Not
mcFailures.ExecuteSubStep(cParentNode.Step.StepId)
Then
        Set GetSubStepToExecute = Nothing
        cParentNode.Status = gintAborted
        Exit Function
    End If

    ' First check if there are pending steps for the
parent!
    If cParentNode.IsPending Then
        ' Loop through all the sub-steps for the
parent node
        For lngIndex = 0 To
cParentNode.SubSteps.Count - 1
            Set cSubStepRec =
cParentNode.SubSteps(lngIndex)
            Set cSubStepDtls =
mcRunSteps.QueryStep(cSubStepRec.StepId)
            If Not
mcInstances.InstanceAborted(cSubStepRec) Then
                ' Check if the sub-step is a worker
                If cSubStepDtls.StepType =
gintWorkerStep Then
                    ' Find/create an instance to
execute
                    Set cSubStepInst =
GetInstanceToExecute( _
                            cParentNode, cSubStepRec,
cSubStepDtls)
                    If not cSubStepInst Is Nothing
Then
                        Exit For
                    Else
                        ' Continue w/ the next sub-
step
                    End If
                Else
                    ' The sub-step is a manager step
                    ' Check if there are any pending
instances for
                    ' the manager
                    Set cSubStepInst =
mcInstances.QueryPendingInstance( _
                            cParentNode.InstanceId,
cSubStepRec.StepId)
                    If cSubStepInst Is Nothing Then
                        ' Find/create an instance to
execute
                        Set cSubStepInst =
GetInstanceToExecute( _
                                cParentNode,
cSubStepRec, cSubStepDtls)
                        If Not cSubStepInst Is
Nothing Then
                            Exit For
                        Else
                            ' Continue w/ the next
sub-step
                        End If
                    Else
                        ' We have found a pending
instance for the
                        ' sub-step (manager) - exit
the loop
                        Exit For
                    End If
                End If
            End If
        Next lngIndex

        If lngIndex > cParentNode.SubSteps.Count - 1
Or cParentNode.SubSteps.Count = 0 Then
            ' If we could not find any sub-steps to
execute,
            ' mark the parent node as complete/all
started
            Call NoSubStepsToExecute(cParentNode,
dtmCompleteTime)
            Set cSubStepInst = Nothing
        End If
    End If

    Set GetSubStepToExecute = cSubStepInst
    Exit Function

GetSubStepToExecuteErr:
    ' Log the error code raised by Visual Basic
    Call LogErrors(Errors)
    On Error GoTo 0
    mstrSource = mstrModuleName &
"GetSubStepToExecute"
    Err.Raise vbObjectError + errNavInstancesFailed,
mstrSource, _
        LoadResString(errNavInstancesFailed)

End Function

Private Sub TimeCompleteUpdateForStep(cMgrInstance As
cInstance, ByVal EndTime As Currency)
```


© 2006 Hewlett-Packard Company. All rights reserved.

```
    ' Called when there are no more sub-steps to
execute for
    ' the manager step. It updates the end time and
status on
    ' the manager.
    Dim lElapsed As Long

    On Error GoTo TimeCompleteUpdateForStepErr

    If cMgrInstance.Key <> mstrDummyRootKey Then
        cMgrInstance.EndTime = EndTime
        cMgrInstance.Status = gintComplete
        lElapsed = (EndTime - cMgrInstance.StartTime)
* 10000
        cMgrInstance.ElapsedTime = lElapsed
        RaiseEvent StepComplete(cMgrInstance.Step,
EndTime, cMgrInstance.InstanceId, lElapsed)
    End If

    Exit Sub

TimeCompleteUpdateForStepErr:
    ' Log the error code raised by Visual Basic
    Call LogErrors(Errors)
    WriteError errUpdateDisplayFailed, mstrModuleName
& "TimeCompleteUpdateForStep"

End Sub

Private Function GetFreeObject() As Long

    ' Check the array of free objects and retrieve
the first one
    If mcFreeSteps.Count > 0 Then
        GetFreeObject = mcFreeSteps(mcFreeSteps.Count
- 1)
    Else
        mstrSource = mstrModuleName & "GetFreeObject"
        ShowError errMaxProcessesExceeded
        On Error GoTo 0
        Err.Raise vbObjectError +
errMaxProcessesExceeded, _
                mstrSource, _

LoadResString(errMaxProcessesExceeded)
    End If

End Function
Private Function StepTerminated(cCompleteStep As
cStep, ByVal dtmCompleteTime As Currency, _
        ByVal lngIndex As Long, ByVal InstanceId As
Long, ByVal ExecutionStatus As InstanceStatus) As
cStep
    ' This procedure is called whenever a step
terminates.
    Dim cTermRec As cTermStep
    Dim cInstRec As cInstance
    Dim cStartInst As cInstance
    Dim lElapsed As Long
    Dim sLogLabel As String
    Dim LogLabels As New cVectorStr
    Dim iItIndex As Long

    On Error GoTo StepTerminatedErr

    Set cInstRec =
mcInstances.QueryInstance(InstanceId)
    If dtmCompleteTime <> 0 And cInstRec.StartTime <>
0 Then
        ' Convert to milliseconds since that is the
default precision
        lElapsed = (dtmCompleteTime -
cInstRec.StartTime) * 10000
    Else
        lElapsed = 0
    End If

    Set cStartInst = cInstRec
    iItIndex = 0
    Do While cInstRec.Key <> mstrDummyRootKey
        sLogLabel = gstrSQ & cInstRec.Step.StepLabel
& gstrSQ

        If iItIndex < cInstRec.Iterators.Count Then
            If cStartInst.Iterators(iItIndex).StepId
= cInstRec.Step.StepId Then
                sLogLabel = sLogLabel & msIt & gstrSQ
& cStartInst.Iterators(iItIndex).IteratorName &
gstrSQ & _
                        msItValue & gstrSQ &
cStartInst.Iterators(iItIndex).Value & gstrSQ
                iItIndex = iItIndex + 1
            End If
        End If

        If cInstRec.Key = cStartInst.Key Then
            ' Append the execution status
            sLogLabel = sLogLabel & " Status: " &
gstrSQ & gsExecutionStatus(ExecutionStatus) & gstrSQ
            If ExecutionStatus = gintFailed Then
                ' Append the continuation criteria
for the step since it failed
                sLogLabel = sLogLabel & "
Continuation Criteria: " & gstrSQ &
gsContCriteria(cInstRec.Step.ContinuationCriteria) &
gstrSQ
            End If
        End If
        LogLabels.Add sLogLabel

        Set cInstRec =
mcInstances.QueryInstance(cInstRec.ParentInstanceId)
    Loop

    Call WriteToWspLog(mintStepComplete, LogLabels,
dtmCompleteTime)
    Set LogLabels = Nothing

    ' Adds the terminated step details to a queue.
    Set cTermRec = New cTermStep
    cTermRec.ExecutionStatus = ExecutionStatus
    cTermRec.Index = lngIndex
    cTermRec.InstanceId = InstanceId
    cTermRec.TimeComplete = dtmCompleteTime
    Call mcTermSteps.Add(cTermRec)
    Set cTermRec = Nothing

    RaiseEvent StepComplete(cCompleteStep,
dtmCompleteTime, InstanceId, lElapsed)

    Exit Function

StepTerminatedErr:
    ' Log the error code raised by Visual Basic
    Call LogErrors(Errors)
    WriteError errExecuteBranchFailed, mstrSource
    Call ResetForm(lngIndex)

End Function
Public Property Let RootKey(ByVal vdata As String)

    mstrRootKey = vdata

End Property

Public Property Get RootKey() As String
    RootKey = mstrRootKey
End Property

Private Function InitExecStep() As cRunStep
    ' Since arrays of objects cannot be declared as
WithEvents,
    ' we use a limited number of objects and set a
maximum
    ' on the number of steps that can run in parallel
    ' This is a wrapper that will create an instance
of
    ' a cExecuteSM object depending on the index
    Dim lngIndex As Long

    On Error GoTo InitExecStepErr

    lngIndex = GetFreeObject

    Select Case lngIndex + 1
        Case 1
            Set cExecStep1 = New cRunStep
            Set InitExecStep = cExecStep1
        Case 2
            Set cExecStep2 = New cRunStep
            Set InitExecStep = cExecStep2
        Case 3
            Set cExecStep3 = New cRunStep
            Set InitExecStep = cExecStep3
        Case 4
            Set cExecStep4 = New cRunStep
            Set InitExecStep = cExecStep4
        Case 5
            Set cExecStep5 = New cRunStep
            Set InitExecStep = cExecStep5
        Case 6
            Set cExecStep6 = New cRunStep
            Set InitExecStep = cExecStep6
        Case 7
            Set cExecStep7 = New cRunStep
            Set InitExecStep = cExecStep7
        Case 8
            Set cExecStep8 = New cRunStep
            Set InitExecStep = cExecStep8
```


© 2006 Hewlett-Packard Company. All rights reserved.

```
Case 9
    Set cExecStep9 = New cRunStep
    Set InitExecStep = cExecStep9
Case 10
    Set cExecStep10 = New cRunStep
    Set InitExecStep = cExecStep10
Case 11
    Set cExecStep11 = New cRunStep
    Set InitExecStep = cExecStep11
Case 12
    Set cExecStep12 = New cRunStep
    Set InitExecStep = cExecStep12
Case 13
    Set cExecStep13 = New cRunStep
    Set InitExecStep = cExecStep13
Case 14
    Set cExecStep14 = New cRunStep
    Set InitExecStep = cExecStep14
Case 15
    Set cExecStep15 = New cRunStep
    Set InitExecStep = cExecStep15
Case 16
    Set cExecStep16 = New cRunStep
    Set InitExecStep = cExecStep16
Case 17
    Set cExecStep17 = New cRunStep
    Set InitExecStep = cExecStep17
Case 18
    Set cExecStep18 = New cRunStep
    Set InitExecStep = cExecStep18
Case 19
    Set cExecStep19 = New cRunStep
    Set InitExecStep = cExecStep19
Case 20
    Set cExecStep20 = New cRunStep
    Set InitExecStep = cExecStep20
Case 21
    Set cExecStep21 = New cRunStep
    Set InitExecStep = cExecStep21
Case 22
    Set cExecStep22 = New cRunStep
    Set InitExecStep = cExecStep22
Case 23
    Set cExecStep23 = New cRunStep
    Set InitExecStep = cExecStep23
Case 24
    Set cExecStep24 = New cRunStep
    Set InitExecStep = cExecStep24
Case 25
    Set cExecStep25 = New cRunStep
    Set InitExecStep = cExecStep25
Case 26
    Set cExecStep26 = New cRunStep
    Set InitExecStep = cExecStep26
Case 27
    Set cExecStep27 = New cRunStep
    Set InitExecStep = cExecStep27
Case 28
    Set cExecStep28 = New cRunStep
    Set InitExecStep = cExecStep28
Case 29
    Set cExecStep29 = New cRunStep
    Set InitExecStep = cExecStep29
Case 30
    Set cExecStep30 = New cRunStep
    Set InitExecStep = cExecStep30
Case 31
    Set cExecStep31 = New cRunStep
    Set InitExecStep = cExecStep31
Case 32
    Set cExecStep32 = New cRunStep
    Set InitExecStep = cExecStep32
Case 33
    Set cExecStep33 = New cRunStep
    Set InitExecStep = cExecStep33
Case 34
    Set cExecStep34 = New cRunStep
    Set InitExecStep = cExecStep34
Case 35
    Set cExecStep35 = New cRunStep
    Set InitExecStep = cExecStep35
Case 36
    Set cExecStep36 = New cRunStep
    Set InitExecStep = cExecStep36
Case 37
    Set cExecStep37 = New cRunStep
    Set InitExecStep = cExecStep37
Case 38
    Set cExecStep38 = New cRunStep
    Set InitExecStep = cExecStep38
Case 39
    Set cExecStep39 = New cRunStep
    Set InitExecStep = cExecStep39
Case 40
    Set cExecStep40 = New cRunStep
    Set InitExecStep = cExecStep40
Case 41
    Set cExecStep41 = New cRunStep
    Set InitExecStep = cExecStep41
Case 42
    Set cExecStep42 = New cRunStep
    Set InitExecStep = cExecStep42
Case 43
    Set cExecStep43 = New cRunStep
    Set InitExecStep = cExecStep43
Case 44
    Set cExecStep44 = New cRunStep
    Set InitExecStep = cExecStep44
Case 45
    Set cExecStep45 = New cRunStep
    Set InitExecStep = cExecStep45
Case 46
    Set cExecStep46 = New cRunStep
    Set InitExecStep = cExecStep46
Case 47
    Set cExecStep47 = New cRunStep
    Set InitExecStep = cExecStep47
Case 48
    Set cExecStep48 = New cRunStep
    Set InitExecStep = cExecStep48
Case 49
    Set cExecStep49 = New cRunStep
    Set InitExecStep = cExecStep49
Case 50
    Set cExecStep50 = New cRunStep
    Set InitExecStep = cExecStep50
Case 51
    Set cExecStep51 = New cRunStep
    Set InitExecStep = cExecStep51
Case 52
    Set cExecStep52 = New cRunStep
    Set InitExecStep = cExecStep52
Case 53
    Set cExecStep53 = New cRunStep
    Set InitExecStep = cExecStep53
Case 54
    Set cExecStep54 = New cRunStep
    Set InitExecStep = cExecStep54
Case 55
    Set cExecStep55 = New cRunStep
    Set InitExecStep = cExecStep55
Case 56
    Set cExecStep56 = New cRunStep
    Set InitExecStep = cExecStep56
Case 57
    Set cExecStep57 = New cRunStep
    Set InitExecStep = cExecStep57
Case 58
    Set cExecStep58 = New cRunStep
    Set InitExecStep = cExecStep58
Case 59
    Set cExecStep59 = New cRunStep
    Set InitExecStep = cExecStep59
Case 60
    Set cExecStep60 = New cRunStep
    Set InitExecStep = cExecStep60
Case 61
    Set cExecStep61 = New cRunStep
    Set InitExecStep = cExecStep61
Case 62
    Set cExecStep62 = New cRunStep
    Set InitExecStep = cExecStep62
Case 63
    Set cExecStep63 = New cRunStep
    Set InitExecStep = cExecStep63
Case 64
    Set cExecStep64 = New cRunStep
    Set InitExecStep = cExecStep64
Case 65
    Set cExecStep65 = New cRunStep
    Set InitExecStep = cExecStep65
Case 66
    Set cExecStep66 = New cRunStep
    Set InitExecStep = cExecStep66
Case 67
    Set cExecStep67 = New cRunStep
    Set InitExecStep = cExecStep67
Case 68
    Set cExecStep68 = New cRunStep
    Set InitExecStep = cExecStep68
Case 69
    Set cExecStep69 = New cRunStep
    Set InitExecStep = cExecStep69
Case 70
    Set cExecStep70 = New cRunStep
    Set InitExecStep = cExecStep70
Case 71
    Set cExecStep71 = New cRunStep
    Set InitExecStep = cExecStep71
```


© 2006 Hewlett-Packard Company. All rights reserved.

```
Case 72
    Set cExecStep72 = New cRunStep
    Set InitExecStep = cExecStep72
Case 73
    Set cExecStep73 = New cRunStep
    Set InitExecStep = cExecStep73
Case 74
    Set cExecStep74 = New cRunStep
    Set InitExecStep = cExecStep74
Case 75
    Set cExecStep75 = New cRunStep
    Set InitExecStep = cExecStep75
Case 76
    Set cExecStep76 = New cRunStep
    Set InitExecStep = cExecStep76
Case 77
    Set cExecStep77 = New cRunStep
    Set InitExecStep = cExecStep77
Case 78
    Set cExecStep78 = New cRunStep
    Set InitExecStep = cExecStep78
Case 79
    Set cExecStep79 = New cRunStep
    Set InitExecStep = cExecStep79
Case 80
    Set cExecStep80 = New cRunStep
    Set InitExecStep = cExecStep80
Case 81
    Set cExecStep81 = New cRunStep
    Set InitExecStep = cExecStep81
Case 82
    Set cExecStep82 = New cRunStep
    Set InitExecStep = cExecStep82
Case 83
    Set cExecStep83 = New cRunStep
    Set InitExecStep = cExecStep83
Case 84
    Set cExecStep84 = New cRunStep
    Set InitExecStep = cExecStep84
Case 85
    Set cExecStep85 = New cRunStep
    Set InitExecStep = cExecStep85
Case 86
    Set cExecStep86 = New cRunStep
    Set InitExecStep = cExecStep86
Case 87
    Set cExecStep87 = New cRunStep
    Set InitExecStep = cExecStep87
Case 88
    Set cExecStep88 = New cRunStep
    Set InitExecStep = cExecStep88
Case 89
    Set cExecStep89 = New cRunStep
    Set InitExecStep = cExecStep89
Case 90
    Set cExecStep90 = New cRunStep
    Set InitExecStep = cExecStep90
Case 91
    Set cExecStep91 = New cRunStep
    Set InitExecStep = cExecStep91
Case 92
    Set cExecStep92 = New cRunStep
    Set InitExecStep = cExecStep92
        Case 93
            Set cExecStep93 = New cRunStep
            Set InitExecStep = cExecStep93
        Case 94
            Set cExecStep94 = New cRunStep
            Set InitExecStep = cExecStep94
        Case 95
            Set cExecStep95 = New cRunStep
            Set InitExecStep = cExecStep95
        Case 96
            Set cExecStep96 = New cRunStep
            Set InitExecStep = cExecStep96
        Case 97
            Set cExecStep97 = New cRunStep
            Set InitExecStep = cExecStep97
        Case 98
            Set cExecStep98 = New cRunStep
            Set InitExecStep = cExecStep98
        Case 99
            Set cExecStep99 = New cRunStep
            Set InitExecStep = cExecStep99
       Case Else
            Set InitExecStep = Nothing
    End Select

    BugMessage "Sending cExecStep" & (lngIndex + 1) &
"!"

    If Not InitExecStep Is Nothing Then
        InitExecStep.Index = lngIndex

        ' Remove this element from the collection of
free objects
        Call RemoveFreeProcess(lngIndex)
    End If

    Exit Function

InitExecStepErr:
    ' Log the error code raised by Visual Basic
    Call LogErrors(Errors)
    Set InitExecStep = Nothing

End Function
Public Sub Run()
    ' Calls procedures to build a list of all the
steps that
    ' need to be executed and to execute them
    ' Determines whether the run has
started/terminated and
    ' raises the Run Start and Complete events.
    Dim cTempStep As cStep

    On Error GoTo RunErr

    If StringEmpty(mstrRootKey) Then
        Call ShowError(errExecuteBranchFailed)
        On Error GoTo 0
        Err.Raise vbObjectError +
errExecuteBranchFailed, mstrModuleName & "Run", _
                LoadResString(errExecuteBranchFailed)
    Else
        ' Execute the first branch
        WriteToWspLog (mintRunStart)
        RaiseEvent RunStart(Determine64BitTime(),
mcWspLog.FileName)

        If mcNavSteps.HasChild(StepKey:=mstrRootKey)
Then
            Set cTempStep =
mcNavSteps.ChildStep(StepKey:=mstrRootKey)
            mstrCurBranchRoot =
MakeKeyValid(cTempStep.StepId, cTempStep.StepType)

            Call
CreateDummyInstance(mstrCurBranchRoot)

            ' Run all pending steps in the branch
            If Not RunBranch(mstrCurBranchRoot) Then
                ' Execute a new branch if there
aren't any
                ' steps to run
                Call RunNewBranch
            End If
        Else
            WriteToWspLog (mintRunComplete)
            ' No children to execute - the run is
complete
            RaiseEvent
RunComplete(Determine64BitTime())
        End If
    End If

    Exit Sub

RunErr:
    ' Log the error code raised by Visual Basic
    Call LogErrors(Errors)
    Call ShowError(errExecuteBranchFailed,
OptArgs:=mstrCurBranchRoot)
    Call ResetForm

End Sub
Private Sub RunNewBranch()
    ' We will build a tree of all instances that
occur and
    ' the count of the sub-steps that are running
will be
    ' stored at each node in the tree (maintained
internally
    ' as an array). Since there can be multiple
iterations
    ' of the top level nodes running at the same
time, we
    ' create a dummy node at the root that keeps a
record of
    ' the instances of the top level node.

    ' Determines whether the run has
started/terminated and
    ' raises the Run Start and Complete events.
    Dim cNextStep As cStep
    Dim bRunComplete As Boolean

    On Error GoTo RunNewBranchErr
```


© 2006 Hewlett-Packard Company. All rights reserved.

```
    bRunComplete = False

    Do
        If StringEmpty(mstrCurBranchRoot) Then
            Exit Do
'            On Error GoTo 0
'            Err.Raise vbObjectError +
errExecuteBranchFailed, mstrSource, _
'
LoadResString(errExecuteBranchFailed)
        Else
            Set cNextStep =
mcNavSteps.NextStep(StepKey:=mstrCurBranchRoot)
            If cNextStep Is Nothing Then
                mstrCurBranchRoot = gstrEmptyString
                bRunComplete = True
                Exit Do
            Else
                ' Starting execution of a new branch
- initialize the
                ' module-level variable
                mstrCurBranchRoot =
MakeKeyValid(cNextStep.StepId, cNextStep.StepType)
                Call
CreateDummyInstance(mstrCurBranchRoot)
            End If
        End If
        Debug.Print "Running new branch: " &
mstrCurBranchRoot

    ' Loop until we find a branch that has steps to
execute
    Loop While Not RunBranch(mstrCurBranchRoot)

    If bRunComplete Then
        WriteToWspLog (mintRunComplete)
        ' Run is complete
        RaiseEvent RunComplete(Determine64BitTime())
    End If

    Exit Sub

RunNewBranchErr:
    ' Log the error code raised by Visual Basic
    Call LogErrors(Errors)
    Call ShowError(errExecuteBranchFailed,
OptArgs:=mstrCurBranchRoot)
    On Error GoTo 0
    mstrSource = mstrModuleName & "RunNewBranch"
    Err.Raise vbObjectError + errExecuteBranchFailed,
mstrSource, _
        LoadResString(errExecuteBranchFailed)

End Sub
Private Function RunBranch(strRootNode As String) As
Boolean
    ' This procedure is called to run all the
necessary steps
    ' in a branch. It can also be called when a step
terminates,
    ' in which case the terminated step is passed in
as the
    ' optional parameter. When a step terminates, we
need to
    ' either wait for some other steps to terminate
before
    ' we execute more steps or run as many steps as
necessary
    ' Returns True if there are steps currently
executing
    ' in the branch, else returns False
    Dim cRunning As cInstance

    On Error GoTo RunBranchErr

    If Not StringEmpty(strRootNode) Then
        ' Call a procedure to execute all the enabled
steps
        ' in the branch - will return the step node
that is
        ' being executed - nothing means 'No more
steps to
        ' execute in the branch'.
        Do
            Set cRunning =
RunPendingStepInBranch(strRootNode, cRunning)

        Loop While Not cRunning Is Nothing

        RunBranch = mcDummyRootInstance.IsRunning
    End If

    Exit Function

RunBranchErr:
    ' Log the error code raised by Visual Basic
    Call LogErrors(Errors)
    On Error GoTo 0
    mstrSource = mstrModuleName & "RunBranch"
    Err.Raise vbObjectError + errExecuteBranchFailed,
_
            mstrSource,
LoadResString(errExecuteBranchFailed)

End Function
Private Sub TimeUpdateForProcess(StepRecord As cStep,
_
        ByVal InstanceId As Long, _
        Optional ByVal StartTime As Currency = 0, _
        Optional ByVal EndTime As Currency = 0, _
        Optional ByVal ElapsedTime As Long = 0, _
        Optional Command As String)
    ' We do not maintain start and end timestamps for
the constraint
    ' of a step. Hence we check if the process that
just started/
    ' terminated is the worker step that is being
executed. If so,
    ' we update the start/end time and status on the
instance record.

    Dim cInstanceRec As cInstance
    Dim sItVal As String

    On Error GoTo TimeUpdateForProcessErr

    Set cInstanceRec =
mcInstances.QueryInstance(InstanceId)

    If StartTime = 0 Then
        RaiseEvent ProcessComplete(StepRecord,
EndTime, InstanceId, ElapsedTime)
    Else
        sItVal = GetInstanceItValue(cInstanceRec)
        RaiseEvent ProcessStart(StepRecord, Command,
StartTime, InstanceId, _
            cInstanceRec.ParentInstanceId,
sItVal)
    End If

    Call
cInstanceRec.UpdateStartTime(StepRecord.StepId,
StartTime, EndTime, ElapsedTime)

    Exit Sub

TimeUpdateForProcessErr:
    ' Log the error code raised by Visual Basic
    Call LogErrors(Errors)
    WriteError errUpdateDisplayFailed, mstrModuleName
& "TimeUpdateForProcess"

End Sub
Private Sub TimeStartUpdateForStep(StepRecord As
cStep, _
        ByVal InstanceId As Long, _
        ByVal StartTime As Currency)

    ' Called when a step starts execution. Checks if
this is the
    ' first enabled child of the manager step. If so,
updates
    ' the start time and status on the manager.
    ' Also raises the Step Start event for the
completed step.

    Dim cStartInst As cInstance
    Dim cInstanceRec As cInstance
    Dim LogLabels As New cVectorStr
    Dim iItIndex As Long
    Dim sLogLabel As String
    Dim sPath As String
    Dim sIt As String
    Dim sItVal As String

    On Error GoTo TimeStartUpdateForStepErr

    Set cStartInst =
mcInstances.QueryInstance(InstanceId)

    ' Determine the step path and iterator values for
the step and raise a step start event
    Set cInstanceRec = cStartInst
    Do While cInstanceRec.Key <> mstrDummyRootKey
        If Not StringEmpty(sPath) Then
            sPath = sPath & gstrFileSeparator
        End If
```


© 2006 Hewlett-Packard Company. All rights reserved.

```
        sPath = sPath & gstrSQ &
cInstanceRec.Step.StepLabel & gstrSQ
        Set cInstanceRec =
mcInstances.QueryInstance(cInstanceRec.ParentInstance
Id)
    Loop

    For iItIndex = cStartInst.Iterators.Count - 1 To
0 Step -1
        If Not StringEmpty(sIt) Then
            sIt = sIt & gstrFileSeparator
        End If
        sIt = sIt & gstrSQ &
cStartInst.Iterators(iItIndex).Value & gstrSQ
    Next iItIndex

    sItVal = GetInstanceItValue(cStartInst)
    RaiseEvent StepStart(StepRecord, StartTime,
InstanceId, cStartInst.ParentInstanceId, _
            sPath, sIt, sItVal)

    iItIndex = 0
    Set cInstanceRec = cStartInst
    ' Raise a StepStart event for the manager step,
if this is it's first sub-step being executed
    Do While cInstanceRec.Key <> mstrDummyRootKey

        sLogLabel = gstrSQ &
cInstanceRec.Step.StepLabel & gstrSQ
        If iItIndex < cStartInst.Iterators.Count Then
            If cStartInst.Iterators(iItIndex).StepId
= cInstanceRec.Step.StepId Then
                sLogLabel = sLogLabel & msIt & gstrSQ
& cStartInst.Iterators(iItIndex).IteratorName &
gstrSQ & _
                        msItValue & gstrSQ &
cStartInst.Iterators(iItIndex).Value & gstrSQ
                iItIndex = iItIndex + 1
            End If
        End If
        LogLabels.Add sLogLabel

        If cInstanceRec.Key <> cStartInst.Key And
cInstanceRec.StartTime = 0 Then
            cInstanceRec.StartTime = StartTime
            cInstanceRec.Status = gintRunning
            sItVal = GetInstanceItValue(cInstanceRec)
            ' The step path and iterator values are
not needed for manager steps, since
            ' they are primarily used by the run
status form
            RaiseEvent StepStart(cInstanceRec.Step,
StartTime, cInstanceRec.InstanceId, _
                    cInstanceRec.ParentInstanceId,
gstrEmptyString, gstrEmptyString, _
                    sItVal)
        End If

        Set cInstanceRec =
mcInstances.QueryInstance(cInstanceRec.ParentInstance
Id)
    Loop
    Call WriteToWspLog(mintStepStart, LogLabels,
StartTime)
    Set LogLabels = Nothing

    Exit Sub

TimeStartUpdateForStepErr:
    ' Log the error code raised by Visual Basic
    Call LogErrors(Errors)
    WriteError errUpdateDisplayFailed, mstrModuleName
& "TimeStartUpdateForStep"

End Sub
Private Sub WriteToWspLog(iLogEvent As WspLogEvents,
Optional StepDtls As cVectorStr, _
        Optional dtStamp As Currency = gdtmEmpty)

    ' Writes to the workspace log that is generated
for the run. The last three
    ' parameters are valid only for Step Start and
Step Complete events.
    Static bError As Boolean
    Dim sLabel As String
    Dim lIndex As Long
    Dim bHdr As Boolean
    Dim cTempConn As cConnection

    On Error GoTo WriteToWspLogErr

    Select Case iLogEvent
        Case mintRunStart
            Set mcWspLog = New cFileSM
            mcWspLog.FileName = GetDefaultDir(WspId,
mcParameters) & gstrFileSeparator & _
                    Trim(Str(RunId)) &
gstrFileSeparator & "SMLog-" & Format(Now,
FMT_WSP_LOG_FILE) & gstrLogFileSuffix
            mcWspLog.WriteLine
(JulianDateToString(Determine64BitTime()) & " Start
Run: " & vbTab & gstrSQ &
GetWorkspaceDetails(WorkspaceId:=WspId)) & gstrSQ

            ' Write all current parameter values to
the log
            bHdr = False
            For lIndex = 0 To
mcParameters.ParameterCount - 1
                If mcParameters(lIndex).ParameterType
<> gintParameterApplication Then
                    If Not bHdr Then
                        mcWspLog.WriteField
JulianDateToString(Determine64BitTime()) & "
Parameters: "
                        bHdr = True
                    Else
                        mcWspLog.WriteField vbTab &
vbTab & vbTab
                    End If
                    mcWspLog.WriteLine vbTab & gstrSQ
& mcParameters(lIndex).ParameterName & gstrSQ & vbTab
& vbTab & gstrSQ &
mcParameters(lIndex).ParameterValue & gstrSQ
                End If
            Next lIndex

            ' Write all connection properties to the
log
            For lIndex = 0 To RunConnections.Count -
1
                Set cTempConn =
RunConnections(lIndex)
                If lIndex = 0 Then
                    mcWspLog.WriteField
JulianDateToString(Determine64BitTime()) & "
Connections: "
                Else
                    mcWspLog.WriteField vbTab & vbTab
& vbTab
                End If
                mcWspLog.WriteLine vbTab & gstrSQ &
cTempConn.ConnectionName & gstrSQ & _
                        vbTab & vbTab & gstrSQ &
cTempConn.ConnectionValue & gstrSQ & _
                        vbTab & "No Count: " & gstrSQ
& cTempConn.NoCountDisplay & gstrSQ & gstrBlank & _
                        "No Execute: " & gstrSQ &
cTempConn.NoExecute & gstrSQ & gstrBlank & _
                        "Parse Query Only: " & gstrSQ
& cTempConn.ParseQueryOnly & gstrSQ & gstrBlank & _
                        "Quoted Identifiers: " &
gstrSQ & cTempConn.QuotedIdentifiers & gstrSQ &
gstrBlank & _
                        "ANSI Nulls: " & gstrSQ &
cTempConn.AnsiNulls & gstrSQ & gstrBlank & _
                        "Show Query Plan: " & gstrSQ
& cTempConn.ShowQueryPlan & gstrSQ & gstrBlank & _
                        "Show Stats Time: " & gstrSQ
& cTempConn.ShowStatsTime & gstrSQ & gstrBlank & _
                        "Show Stats IO: " & gstrSQ &
cTempConn.ShowStatsIO & gstrSQ & gstrBlank & _
                        "Row Count" & gstrSQ &
cTempConn.RowCount & gstrSQ & gstrBlank & _
                        "Query Timeout" & gstrSQ &
cTempConn.QueryTimeOut & gstrSQ
            Next lIndex

        Case mintRunComplete
            BugAssert Not mcWspLog Is Nothing
            mcWspLog.WriteLine
(JulianDateToString(Determine64BitTime()) & " Comp.
Run: " & vbTab & gstrSQ &
GetWorkspaceDetails(WorkspaceId:=WspId)) & gstrSQ
            Set mcWspLog = Nothing

        Case mintStepStart
            For lIndex = StepDtls.Count - 1 To 0 Step
-1
                sLabel = StepDtls(lIndex)
                If lIndex = StepDtls.Count - 1 Then
                    mcWspLog.WriteLine
JulianDateToString(dtStamp) & " Start Step: " & vbTab
& sLabel
                Else
                    mcWspLog.WriteLine vbTab & vbTab
& vbTab & vbTab & sLabel
                End If
```


© 2006 Hewlett-Packard Company. All rights reserved.

```
            Next lIndex

        Case mintStepComplete
            For lIndex = StepDtls.Count - 1 To 0 Step
-1
                sLabel = StepDtls(lIndex)
                If lIndex = StepDtls.Count - 1 Then
                    mcWspLog.WriteLine
JulianDateToString(dtStamp) & " Comp. Step: " & vbTab
& sLabel
                Else
                    mcWspLog.WriteLine vbTab & vbTab
& vbTab & vbTab & sLabel
                End If
            Next lIndex

    End Select

    Exit Sub

WriteToWspLogErr:
    If Not bError Then
        bError = True
    End If

End Sub
'Private Sub WriteToWspLog(iLogEvent As WspLogEvents,
Optional StepDtls As cVectorStr, _
'        Optional dtStamp As Date = gdtmEmpty)
'
'   This function uses the LogWriter dll - memory
corruption problems since the vb exe
'   and the vc Execute Dll both use the same dll to
write.
'    ' Writes to the workspace log that is generated
for the run. The last three
'    ' parameters are valid only for StepStart and
StepComplete events.
'    Static bError As Boolean
'    Static sFile As String
'    Dim sLabel As String
'    Dim lIndex As Long
'    Dim bHdr As Boolean
'
'    On Error GoTo WriteToWspLogErr
'
'    Select Case iLogEvent
'        Case mintRunStart
'            Set mcWspLog = New LOGWRITERLib.SMLog
'            sFile = App.Path & "\" & "SMLog-" &
Format(Now, FMT_WSP_LOG_FILE) & gstrLogFileSuffix
'            mcWspLog.FileName = sFile
'            mcWspLog.Init
'            mcWspLog.WriteLine (Format(Now,
FMT_WSP_LOG_DATE) & " Start Run: " & vbTab & gstrSQ &
GetWorkspaceDetails(WorkspaceId:=WspId)) & gstrSQ
'
'            ' Write all current parameter values to
the log
'            bHdr = False
'            For lIndex = 0 To
mcParameters.ParameterCount - 1
'                If
mcParameters(lIndex).ParameterType <>
gintParameterApplication Then
'                    If Not bHdr Then
'                        'mcWspLog.WriteLine
Format(Now, FMT_WSP_LOG_DATE) & " Parameters: " &
vbTab & gstrSQ & mcParameters(lIndex).ParameterName &
gstrSQ & vbTab & vbTab & gstrSQ &
mcParameters(lIndex).ParameterValue & gstrSQ
'                        bHdr = True
'                    Else
'                        'mcWspLog.WriteLine vbTab &
vbTab & vbTab & vbTab & gstrSQ &
mcParameters(lIndex).ParameterName & gstrSQ & vbTab &
vbTab & gstrSQ & mcParameters(lIndex).ParameterValue
& gstrSQ
'                    End If
'                End If
'            Next lIndex
'
'        Case mintRunComplete
'            BugAssert Not mcWspLog Is Nothing
'            mcWspLog.WriteLine (Format(Now,
FMT_WSP_LOG_DATE) & " Comp. Run: " & vbTab & gstrSQ &
GetWorkspaceDetails(WorkspaceId:=WspId)) & gstrSQ
'            Set mcWspLog = Nothing
'
'        Case mintStepStart
'            For lIndex = StepDtls.Count - 1 To 0
Step -1
'                sLabel = StepDtls(lIndex)
'                If lIndex = StepDtls.Count - 1 Then
'                    mcWspLog.WriteLine
Format(dtStamp, FMT_WSP_LOG_DATE) & " Start Step: " &
vbTab & sLabel
'                Else
'                    mcWspLog.WriteLine vbTab & vbTab
& vbTab & vbTab & sLabel
'                End If
'            Next lIndex
'
'        Case mintStepComplete
'            For lIndex = StepDtls.Count - 1 To 0
Step -1
'                sLabel = StepDtls(lIndex)
'                If lIndex = StepDtls.Count - 1 Then
'                    mcWspLog.WriteLine
Format(dtStamp, FMT_WSP_LOG_DATE) & " Comp. Step: " &
vbTab & sLabel
'                Else
'                    mcWspLog.WriteLine vbTab & vbTab
& vbTab & vbTab & sLabel
'                End If
'            Next lIndex
'
'    End Select
'
'    Exit Sub
'
'WriteToWspLogErr:
'    If Not bError Then
'        bError = True
'    End If
'
'End Sub
'
Public Property Get WspPreExecution() As Variant
    WspPreExecution = mcvntWspPreCons
End Property
Public Property Let WspPreExecution(ByVal vdata As
Variant)
    mcvntWspPreCons = vdata
End Property

Public Property Get WspPostExecution() As Variant
    WspPostExecution = mcvntWspPostCons
End Property
Public Property Let WspPostExecution(ByVal vdata As
Variant)
    mcvntWspPostCons = vdata
End Property

Private Sub ExecuteStep(cCurStep As cInstance)
    ' Initializes a cRunStep object with all the
properties
    ' corresponding to the step to be executed and
calls it's
    ' execute method to execute the step

    Dim cExecStep As cRunStep

    On Error GoTo ExecuteStepErr
    mstrSource = mstrModuleName & "ExecuteStep"

    ' Confirm that the step is a worker
    If cCurStep.Step.StepType <> gintWorkerStep Then
        On Error GoTo 0
        Err.Raise vbObjectError +
errExecInstanceFailed, mstrSource, _
                LoadResString(errExecInstanceFailed)
    End If

    Set cExecStep = InitExecStep()
    ' Exceeded the number of processes that we can
run simultaneously
    If cExecStep Is Nothing Then
        ' Raise an error
        On Error GoTo 0
        Err.Raise vbObjectError + errProgramError,
mstrSource, _
            LoadResString(errProgramError)
    End If
    ' Initialize the instance id - not needed for
step execution
    ' but necessary to identify later which instance
completed
    cExecStep.InstanceId = cCurStep.InstanceId

    Set cExecStep.ExecuteStep = cCurStep.Step
    Set cExecStep.Iterators = cCurStep.Iterators
    Set cExecStep.Globals = mcRunSteps
    Set cExecStep.WspParameters = mcParameters
    Set cExecStep.WspConnections = RunConnections
    Set cExecStep.WspConnDtls = RunConnDtls
```


© 2006 Hewlett-Packard Company. All rights reserved.

```
    ' Initialize all the pre and post-execution
constraints that
    ' have been defined globally for the workspace
    cExecStep.WspPreCons = mcvntWspPreCons
    cExecStep.WspPostCons = mcvntWspPostCons

    ' Initialize all the pre and post-execution
constraints for
    ' the step being executed
    cExecStep.PreCons =
DetermineConstraints(cCurStep, gintPreStep)
    cExecStep.PostCons =
DetermineConstraints(cCurStep, gintPostStep)

    cExecStep.RunId = RunId
    cExecStep.CreateInputFiles = CreateInputFiles

    ' Call the execute method to execute the step
    cExecStep.Execute

    Set cExecStep = Nothing

    Exit Sub

ExecuteStepErr:
    ' Log the error code raised by Visual Basic
    Call LogErrors(Errors)
    On Error GoTo 0
    Call ExecutionFailed(cExecStep)

End Sub

Public Property Set Steps(cRunSteps As cArrSteps)

    Set mcRunSteps = cRunSteps
    Set mcNavSteps.StepRecords = cRunSteps

End Property
Public Property Set Parameters(cParameters As
cArrParameters)
    ' A reference to the parameter array - we use it
to
    ' substitute parameter values in the step text

    Set mcParameters = cParameters

End Property
Public Property Get Steps() As cArrSteps

    Set Steps = mcRunSteps

End Property
Public Property Get Constraints() As cArrConstraints

    Set Constraints = mcRunConstraints

End Property
Public Property Set Constraints(vdata As
cArrConstraints)

    Set mcRunConstraints = vdata

End Property


Private Sub cExecStep1_ProcessComplete(cStepRecord As
cStep, _
        dtmEndTime As Currency, lngInstanceId As
Long, lElapsed As Long)

    Call TimeUpdateForProcess(cStepRecord,
lngInstanceId, EndTime:=dtmEndTime,
ElapsedTime:=lElapsed)

End Sub


Private Sub cExecStep1_ProcessStart(cStepRecord As
cStep, _
        strCommand As String, dtmStartTime As
Currency, lngInstanceId As Long)

    Call TimeUpdateForProcess(cStepRecord,
lngInstanceId, StartTime:=dtmStartTime,
Command:=strCommand)

End Sub


Private Sub cExecStep1_StepComplete(cStepRecord As
cStep, _
        dtmEndTime As Currency, InstanceId As Long,
Status As InstanceStatus)

    Call StepTerminated(cStepRecord, dtmEndTime,
cExecStep1.Index, InstanceId, Status)

End Sub

Private Sub cExecStep1_StepStart(cStepRecord As
cStep, _
        dtmStartTime As Currency, InstanceId As Long)

    Call TimeStartUpdateForStep(cStepRecord,
InstanceId, dtmStartTime)

End Sub

Private Sub cExecStep9_ProcessComplete(cStepRecord As
cStep, _
        dtmEndTime As Currency, lngInstanceId As
Long, lElapsed As Long)

    Call TimeUpdateForProcess(cStepRecord,
lngInstanceId, EndTime:=dtmEndTime,
ElapsedTime:=lElapsed)

End Sub


Private Sub cExecStep9_ProcessStart(cStepRecord As
cStep, _
        strCommand As String, dtmStartTime As
Currency, lngInstanceId As Long)

    Call TimeUpdateForProcess(cStepRecord,
lngInstanceId, StartTime:=dtmStartTime,
Command:=strCommand)

End Sub


Private Sub cExecStep9_StepComplete(cStepRecord As
cStep, _
        dtmEndTime As Currency, InstanceId As Long,
Status As InstanceStatus)

    Call StepTerminated(cStepRecord, dtmEndTime,
cExecStep9.Index, InstanceId, Status)

End Sub

Private Sub cExecStep9_StepStart(cStepRecord As
cStep, _
        dtmStartTime As Currency, InstanceId As Long)

    Call TimeStartUpdateForStep(cStepRecord,
InstanceId, dtmStartTime)

End Sub

Private Sub cExecStep10_ProcessComplete(cStepRecord
As cStep, _
        dtmEndTime As Currency, lngInstanceId As
Long, lElapsed As Long)

    Call TimeUpdateForProcess(cStepRecord,
lngInstanceId, EndTime:=dtmEndTime,
ElapsedTime:=lElapsed)

End Sub


Private Sub cExecStep10_ProcessStart(cStepRecord As
cStep, _
        strCommand As String, dtmStartTime As
Currency, lngInstanceId As Long)

    Call TimeUpdateForProcess(cStepRecord,
lngInstanceId, StartTime:=dtmStartTime,
Command:=strCommand)

End Sub


Private Sub cExecStep10_StepComplete(cStepRecord As
cStep, _
        dtmEndTime As Currency, InstanceId As Long,
Status As InstanceStatus)

    Call StepTerminated(cStepRecord, dtmEndTime,
cExecStep10.Index, InstanceId, Status)

End Sub

Private Sub cExecStep10_StepStart(cStepRecord As
cStep, _
        dtmStartTime As Currency, InstanceId As Long)
```


© 2006 Hewlett-Packard Company. All rights reserved.

```
    Call TimeStartUpdateForStep(cStepRecord,
InstanceId, dtmStartTime)

End Sub

Private Sub cExecStep11_ProcessComplete(cStepRecord
As cStep, _
        dtmEndTime As Currency, lngInstanceId As
Long, lElapsed As Long)

    Call TimeUpdateForProcess(cStepRecord,
lngInstanceId, EndTime:=dtmEndTime,
ElapsedTime:=lElapsed)

End Sub


Private Sub cExecStep11_ProcessStart(cStepRecord As
cStep, _
        strCommand As String, dtmStartTime As
Currency, lngInstanceId As Long)

    Call TimeUpdateForProcess(cStepRecord,
lngInstanceId, StartTime:=dtmStartTime,
Command:=strCommand)

End Sub


Private Sub cExecStep11_StepComplete(cStepRecord As
cStep, _
        dtmEndTime As Currency, InstanceId As Long,
Status As InstanceStatus)

    Call StepTerminated(cStepRecord, dtmEndTime,
cExecStep11.Index, InstanceId, Status)

End Sub

Private Sub cExecStep11_StepStart(cStepRecord As
cStep, _
        dtmStartTime As Currency, InstanceId As Long)

    Call TimeStartUpdateForStep(cStepRecord,
InstanceId, dtmStartTime)

End Sub
Private Sub cExecStep12_ProcessComplete(cStepRecord
As cStep, _
        dtmEndTime As Currency, lngInstanceId As
Long, lElapsed As Long)

    Call TimeUpdateForProcess(cStepRecord,
lngInstanceId, EndTime:=dtmEndTime,
ElapsedTime:=lElapsed)

End Sub


Private Sub cExecStep12_ProcessStart(cStepRecord As
cStep, _
        strCommand As String, dtmStartTime As
Currency, lngInstanceId As Long)

    Call TimeUpdateForProcess(cStepRecord,
lngInstanceId, StartTime:=dtmStartTime,
Command:=strCommand)

End Sub


Private Sub cExecStep12_StepComplete(cStepRecord As
cStep, _
        dtmEndTime As Currency, InstanceId As Long,
Status As InstanceStatus)

    Call StepTerminated(cStepRecord, dtmEndTime,
cExecStep12.Index, InstanceId, Status)

End Sub

Private Sub cExecStep12_StepStart(cStepRecord As
cStep, _
        dtmStartTime As Currency, InstanceId As Long)

    Call TimeStartUpdateForStep(cStepRecord,
InstanceId, dtmStartTime)

End Sub
Private Sub cExecStep13_ProcessComplete(cStepRecord
As cStep, _
        dtmEndTime As Currency, lngInstanceId As
Long, lElapsed As Long)

    Call TimeUpdateForProcess(cStepRecord,
lngInstanceId, EndTime:=dtmEndTime,
ElapsedTime:=lElapsed)

End Sub


Private Sub cExecStep13_ProcessStart(cStepRecord As
cStep, _
        strCommand As String, dtmStartTime As
Currency, lngInstanceId As Long)

    Call TimeUpdateForProcess(cStepRecord,
lngInstanceId, StartTime:=dtmStartTime,
Command:=strCommand)

End Sub


Private Sub cExecStep13_StepComplete(cStepRecord As
cStep, _
        dtmEndTime As Currency, InstanceId As Long,
Status As InstanceStatus)

    Call StepTerminated(cStepRecord, dtmEndTime,
cExecStep13.Index, InstanceId, Status)

End Sub

Private Sub cExecStep13_StepStart(cStepRecord As
cStep, _
        dtmStartTime As Currency, InstanceId As Long)

    Call TimeStartUpdateForStep(cStepRecord,
InstanceId, dtmStartTime)

End Sub
Private Sub cExecStep14_ProcessComplete(cStepRecord
As cStep, _
        dtmEndTime As Currency, lngInstanceId As
Long, lElapsed As Long)

    Call TimeUpdateForProcess(cStepRecord,
lngInstanceId, EndTime:=dtmEndTime,
ElapsedTime:=lElapsed)

End Sub


Private Sub cExecStep14_ProcessStart(cStepRecord As
cStep, _
        strCommand As String, dtmStartTime As
Currency, lngInstanceId As Long)

    Call TimeUpdateForProcess(cStepRecord,
lngInstanceId, StartTime:=dtmStartTime,
Command:=strCommand)

End Sub


Private Sub cExecStep14_StepComplete(cStepRecord As
cStep, _
        dtmEndTime As Currency, InstanceId As Long,
Status As InstanceStatus)

    Call StepTerminated(cStepRecord, dtmEndTime,
cExecStep14.Index, InstanceId, Status)

End Sub

Private Sub cExecStep14_StepStart(cStepRecord As
cStep, _
        dtmStartTime As Currency, InstanceId As Long)

    Call TimeStartUpdateForStep(cStepRecord,
InstanceId, dtmStartTime)

End Sub
Private Sub cExecStep15_ProcessComplete(cStepRecord
As cStep, _
        dtmEndTime As Currency, lngInstanceId As
Long, lElapsed As Long)

    Call TimeUpdateForProcess(cStepRecord,
lngInstanceId, EndTime:=dtmEndTime,
ElapsedTime:=lElapsed)

End Sub
```


© 2006 Hewlett-Packard Company. All rights reserved.

```
Private Sub cExecStep15_ProcessStart(cStepRecord As
cStep, _
        strCommand As String, dtmStartTime As
Currency, lngInstanceId As Long)

    Call TimeUpdateForProcess(cStepRecord,
lngInstanceId, StartTime:=dtmStartTime,
Command:=strCommand)

End Sub


Private Sub cExecStep15_StepComplete(cStepRecord As
cStep, _
        dtmEndTime As Currency, InstanceId As Long,
Status As InstanceStatus)

    Call StepTerminated(cStepRecord, dtmEndTime,
cExecStep15.Index, InstanceId, Status)

End Sub

Private Sub cExecStep15_StepStart(cStepRecord As
cStep, _
        dtmStartTime As Currency, InstanceId As Long)

    Call TimeStartUpdateForStep(cStepRecord,
InstanceId, dtmStartTime)

End Sub
Private Sub cExecStep16_ProcessComplete(cStepRecord
As cStep, _
        dtmEndTime As Currency, lngInstanceId As
Long, lElapsed As Long)

    Call TimeUpdateForProcess(cStepRecord,
lngInstanceId, EndTime:=dtmEndTime,
ElapsedTime:=lElapsed)

End Sub


Private Sub cExecStep16_ProcessStart(cStepRecord As
cStep, _
        strCommand As String, dtmStartTime As
Currency, lngInstanceId As Long)

    Call TimeUpdateForProcess(cStepRecord,
lngInstanceId, StartTime:=dtmStartTime,
Command:=strCommand)

End Sub


Private Sub cExecStep16_StepComplete(cStepRecord As
cStep, _
        dtmEndTime As Currency, InstanceId As Long,
Status As InstanceStatus)

    Call StepTerminated(cStepRecord, dtmEndTime,
cExecStep16.Index, InstanceId, Status)

End Sub

Private Sub cExecStep16_StepStart(cStepRecord As
cStep, _
        dtmStartTime As Currency, InstanceId As Long)

    Call TimeStartUpdateForStep(cStepRecord,
InstanceId, dtmStartTime)

End Sub
Private Sub cExecStep17_ProcessComplete(cStepRecord
As cStep, _
        dtmEndTime As Currency, lngInstanceId As
Long, lElapsed As Long)

    Call TimeUpdateForProcess(cStepRecord,
lngInstanceId, EndTime:=dtmEndTime,
ElapsedTime:=lElapsed)

End Sub


Private Sub cExecStep17_ProcessStart(cStepRecord As
cStep, _
        strCommand As String, dtmStartTime As
Currency, lngInstanceId As Long)

    Call TimeUpdateForProcess(cStepRecord,
lngInstanceId, StartTime:=dtmStartTime,
Command:=strCommand)

End Sub


Private Sub cExecStep17_StepComplete(cStepRecord As
cStep, _
        dtmEndTime As Currency, InstanceId As Long,
Status As InstanceStatus)

    Call StepTerminated(cStepRecord, dtmEndTime,
cExecStep17.Index, InstanceId, Status)

End Sub

Private Sub cExecStep17_StepStart(cStepRecord As
cStep, _
        dtmStartTime As Currency, InstanceId As Long)

    Call TimeStartUpdateForStep(cStepRecord,
InstanceId, dtmStartTime)

End Sub

Private Sub cExecStep18_ProcessComplete(cStepRecord
As cStep, _
        dtmEndTime As Currency, lngInstanceId As
Long, lElapsed As Long)

    Call TimeUpdateForProcess(cStepRecord,
lngInstanceId, EndTime:=dtmEndTime,
ElapsedTime:=lElapsed)

End Sub

Private Sub cExecStep18_ProcessStart(cStepRecord As
cStep, _
        strCommand As String, dtmStartTime As
Currency, lngInstanceId As Long)

    Call TimeUpdateForProcess(cStepRecord,
lngInstanceId, StartTime:=dtmStartTime,
Command:=strCommand)

End Sub


Private Sub cExecStep18_StepComplete(cStepRecord As
cStep, _
        dtmEndTime As Currency, InstanceId As Long,
Status As InstanceStatus)

    Call StepTerminated(cStepRecord, dtmEndTime,
cExecStep18.Index, InstanceId, Status)

End Sub

Private Sub cExecStep18_StepStart(cStepRecord As
cStep, _
        dtmStartTime As Currency, InstanceId As Long)

    Call TimeStartUpdateForStep(cStepRecord,
InstanceId, dtmStartTime)

End Sub

Private Sub cExecStep19_ProcessComplete(cStepRecord
As cStep, _
        dtmEndTime As Currency, lngInstanceId As
Long, lElapsed As Long)

    Call TimeUpdateForProcess(cStepRecord,
lngInstanceId, EndTime:=dtmEndTime,
ElapsedTime:=lElapsed)

End Sub


Private Sub cExecStep19_ProcessStart(cStepRecord As
cStep, _
        strCommand As String, dtmStartTime As
Currency, lngInstanceId As Long)

    Call TimeUpdateForProcess(cStepRecord,
lngInstanceId, StartTime:=dtmStartTime,
Command:=strCommand)

End Sub


Private Sub cExecStep19_StepComplete(cStepRecord As
cStep, _
        dtmEndTime As Currency, InstanceId As Long,
Status As InstanceStatus)

    Call StepTerminated(cStepRecord, dtmEndTime,
cExecStep19.Index, InstanceId, Status)
```


© 2006 Hewlett-Packard Company. All rights reserved.

```
End Sub

Private Sub cExecStep19_StepStart(cStepRecord As
cStep, _
        dtmStartTime As Currency, InstanceId As Long)

    Call TimeStartUpdateForStep(cStepRecord,
InstanceId, dtmStartTime)

End Sub

Private Sub cExecStep20_ProcessComplete(cStepRecord
As cStep, _
        dtmEndTime As Currency, lngInstanceId As
Long, lElapsed As Long)

    Call TimeUpdateForProcess(cStepRecord,
lngInstanceId, EndTime:=dtmEndTime,
ElapsedTime:=lElapsed)

End Sub

Private Sub cExecStep20_ProcessStart(cStepRecord As
cStep, _
        strCommand As String, dtmStartTime As
Currency, lngInstanceId As Long)

    Call TimeUpdateForProcess(cStepRecord,
lngInstanceId, StartTime:=dtmStartTime,
Command:=strCommand)

End Sub

Private Sub cExecStep20_StepComplete(cStepRecord As
cStep, _
        dtmEndTime As Currency, InstanceId As Long,
Status As InstanceStatus)

    Call StepTerminated(cStepRecord, dtmEndTime,
cExecStep20.Index, InstanceId, Status)

End Sub

Private Sub cExecStep20_StepStart(cStepRecord As
cStep, _
        dtmStartTime As Currency, InstanceId As Long)

    Call TimeStartUpdateForStep(cStepRecord,
InstanceId, dtmStartTime)

End Sub

Private Sub cExecStep21_ProcessComplete(cStepRecord
As cStep, _
        dtmEndTime As Currency, lngInstanceId As
Long, lElapsed As Long)

    Call TimeUpdateForProcess(cStepRecord,
lngInstanceId, EndTime:=dtmEndTime,
ElapsedTime:=lElapsed)

End Sub

Private Sub cExecStep21_ProcessStart(cStepRecord As
cStep, _
        strCommand As String, dtmStartTime As
Currency, lngInstanceId As Long)

    Call TimeUpdateForProcess(cStepRecord,
lngInstanceId, StartTime:=dtmStartTime,
Command:=strCommand)

End Sub

Private Sub cExecStep21_StepComplete(cStepRecord As
cStep, _
        dtmEndTime As Currency, InstanceId As Long,
Status As InstanceStatus)

    Call StepTerminated(cStepRecord, dtmEndTime,
cExecStep21.Index, InstanceId, Status)

End Sub

Private Sub cExecStep21_StepStart(cStepRecord As
cStep, _
        dtmStartTime As Currency, InstanceId As Long)

    Call TimeStartUpdateForStep(cStepRecord,
InstanceId, dtmStartTime)

End Sub

Private Sub cExecStep22_ProcessComplete(cStepRecord
As cStep, _
        dtmEndTime As Currency, lngInstanceId As
Long, lElapsed As Long)

    Call TimeUpdateForProcess(cStepRecord,
lngInstanceId, EndTime:=dtmEndTime,
ElapsedTime:=lElapsed)

End Sub

Private Sub cExecStep22_ProcessStart(cStepRecord As
cStep, _
        strCommand As String, dtmStartTime As
Currency, lngInstanceId As Long)

    Call TimeUpdateForProcess(cStepRecord,
lngInstanceId, StartTime:=dtmStartTime,
Command:=strCommand)

End Sub

Private Sub cExecStep22_StepComplete(cStepRecord As
cStep, _
        dtmEndTime As Currency, InstanceId As Long,
Status As InstanceStatus)

    Call StepTerminated(cStepRecord, dtmEndTime,
cExecStep22.Index, InstanceId, Status)

End Sub

Private Sub cExecStep22_StepStart(cStepRecord As
cStep, _
        dtmStartTime As Currency, InstanceId As Long)

    Call TimeStartUpdateForStep(cStepRecord,
InstanceId, dtmStartTime)

End Sub

Private Sub cExecStep23_ProcessComplete(cStepRecord
As cStep, _
        dtmEndTime As Currency, lngInstanceId As
Long, lElapsed As Long)

    Call TimeUpdateForProcess(cStepRecord,
lngInstanceId, EndTime:=dtmEndTime,
ElapsedTime:=lElapsed)

End Sub

Private Sub cExecStep23_ProcessStart(cStepRecord As
cStep, _
        strCommand As String, dtmStartTime As
Currency, lngInstanceId As Long)

    Call TimeUpdateForProcess(cStepRecord,
lngInstanceId, StartTime:=dtmStartTime,
Command:=strCommand)

End Sub

Private Sub cExecStep23_StepComplete(cStepRecord As
cStep, _
        dtmEndTime As Currency, InstanceId As Long,
Status As InstanceStatus)

    Call StepTerminated(cStepRecord, dtmEndTime,
cExecStep23.Index, InstanceId, Status)

End Sub

Private Sub cExecStep23_StepStart(cStepRecord As
cStep, _
        dtmStartTime As Currency, InstanceId As Long)

    Call TimeStartUpdateForStep(cStepRecord,
InstanceId, dtmStartTime)

End Sub

Private Sub cExecStep24_ProcessComplete(cStepRecord
As cStep, _
        dtmEndTime As Currency, lngInstanceId As
Long, lElapsed As Long)

    Call TimeUpdateForProcess(cStepRecord,
lngInstanceId, EndTime:=dtmEndTime,
ElapsedTime:=lElapsed)

End Sub

Private Sub cExecStep24_ProcessStart(cStepRecord As
cStep, _
```


© 2006 Hewlett-Packard Company. All rights reserved.

```
        strCommand As String, dtmStartTime As
Currency, lngInstanceId As Long)

    Call TimeUpdateForProcess(cStepRecord,
lngInstanceId, StartTime:=dtmStartTime,
Command:=strCommand)

End Sub

Private Sub cExecStep24_StepComplete(cStepRecord As
cStep, _
        dtmEndTime As Currency, InstanceId As Long,
Status As InstanceStatus)

    Call StepTerminated(cStepRecord, dtmEndTime,
cExecStep24.Index, InstanceId, Status)

End Sub

Private Sub cExecStep24_StepStart(cStepRecord As
cStep, _
        dtmStartTime As Currency, InstanceId As Long)

    Call TimeStartUpdateForStep(cStepRecord,
InstanceId, dtmStartTime)

End Sub

Private Sub cExecStep25_ProcessComplete(cStepRecord
As cStep, _
        dtmEndTime As Currency, lngInstanceId As
Long, lElapsed As Long)

    Call TimeUpdateForProcess(cStepRecord,
lngInstanceId, EndTime:=dtmEndTime,
ElapsedTime:=lElapsed)

End Sub

Private Sub cExecStep25_ProcessStart(cStepRecord As
cStep, _
        strCommand As String, dtmStartTime As
Currency, lngInstanceId As Long)

    Call TimeUpdateForProcess(cStepRecord,
lngInstanceId, StartTime:=dtmStartTime,
Command:=strCommand)

End Sub

Private Sub cExecStep25_StepComplete(cStepRecord As
cStep, _
        dtmEndTime As Currency, InstanceId As Long,
Status As InstanceStatus)

    Call StepTerminated(cStepRecord, dtmEndTime,
cExecStep25.Index, InstanceId, Status)

End Sub

Private Sub cExecStep25_StepStart(cStepRecord As
cStep, _
        dtmStartTime As Currency, InstanceId As Long)

    Call TimeStartUpdateForStep(cStepRecord,
InstanceId, dtmStartTime)

End Sub

Private Sub cExecStep26_ProcessComplete(cStepRecord
As cStep, _
        dtmEndTime As Currency, lngInstanceId As
Long, lElapsed As Long)

    Call TimeUpdateForProcess(cStepRecord,
lngInstanceId, EndTime:=dtmEndTime,
ElapsedTime:=lElapsed)

End Sub

Private Sub cExecStep26_ProcessStart(cStepRecord As
cStep, _
        strCommand As String, dtmStartTime As
Currency, lngInstanceId As Long)

    Call TimeUpdateForProcess(cStepRecord,
lngInstanceId, StartTime:=dtmStartTime,
Command:=strCommand)

End Sub

Private Sub cExecStep26_StepComplete(cStepRecord As
cStep, _
        dtmEndTime As Currency, InstanceId As Long,
Status As InstanceStatus)

    Call StepTerminated(cStepRecord, dtmEndTime,
cExecStep26.Index, InstanceId, Status)

End Sub

Private Sub cExecStep26_StepStart(cStepRecord As
cStep, _
        dtmStartTime As Currency, InstanceId As Long)

    Call TimeStartUpdateForStep(cStepRecord,
InstanceId, dtmStartTime)

End Sub

Private Sub cExecStep27_ProcessComplete(cStepRecord
As cStep, _
        dtmEndTime As Currency, lngInstanceId As
Long, lElapsed As Long)

    Call TimeUpdateForProcess(cStepRecord,
lngInstanceId, EndTime:=dtmEndTime,
ElapsedTime:=lElapsed)

End Sub

Private Sub cExecStep27_ProcessStart(cStepRecord As
cStep, _
        strCommand As String, dtmStartTime As
Currency, lngInstanceId As Long)

    Call TimeUpdateForProcess(cStepRecord,
lngInstanceId, StartTime:=dtmStartTime,
Command:=strCommand)

End Sub

Private Sub cExecStep27_StepComplete(cStepRecord As
cStep, _
        dtmEndTime As Currency, InstanceId As Long,
Status As InstanceStatus)

    Call StepTerminated(cStepRecord, dtmEndTime,
cExecStep27.Index, InstanceId, Status)

End Sub

Private Sub cExecStep27_StepStart(cStepRecord As
cStep, _
        dtmStartTime As Currency, InstanceId As Long)

    Call TimeStartUpdateForStep(cStepRecord,
InstanceId, dtmStartTime)

End Sub

Private Sub cExecStep28_ProcessComplete(cStepRecord
As cStep, _
        dtmEndTime As Currency, lngInstanceId As
Long, lElapsed As Long)

    Call TimeUpdateForProcess(cStepRecord,
lngInstanceId, EndTime:=dtmEndTime,
ElapsedTime:=lElapsed)

End Sub

Private Sub cExecStep28_ProcessStart(cStepRecord As
cStep, _
        strCommand As String, dtmStartTime As
Currency, lngInstanceId As Long)

    Call TimeUpdateForProcess(cStepRecord,
lngInstanceId, StartTime:=dtmStartTime,
Command:=strCommand)

End Sub

Private Sub cExecStep28_StepComplete(cStepRecord As
cStep, _
        dtmEndTime As Currency, InstanceId As Long,
Status As InstanceStatus)

    Call StepTerminated(cStepRecord, dtmEndTime,
cExecStep28.Index, InstanceId, Status)

End Sub

Private Sub cExecStep28_StepStart(cStepRecord As
cStep, _
        dtmStartTime As Currency, InstanceId As Long)

    Call TimeStartUpdateForStep(cStepRecord,
InstanceId, dtmStartTime)
```


© 2006 Hewlett-Packard Company. All rights reserved.

```
End Sub

Private Sub cExecStep29_ProcessComplete(cStepRecord
As cStep, _
        dtmEndTime As Currency, lngInstanceId As
Long, lElapsed As Long)

    Call TimeUpdateForProcess(cStepRecord,
lngInstanceId, EndTime:=dtmEndTime,
ElapsedTime:=lElapsed)

End Sub

Private Sub cExecStep29_ProcessStart(cStepRecord As
cStep, _
        strCommand As String, dtmStartTime As
Currency, lngInstanceId As Long)

    Call TimeUpdateForProcess(cStepRecord,
lngInstanceId, StartTime:=dtmStartTime,
Command:=strCommand)

End Sub

Private Sub cExecStep29_StepComplete(cStepRecord As
cStep, _
        dtmEndTime As Currency, InstanceId As Long,
Status As InstanceStatus)

    Call StepTerminated(cStepRecord, dtmEndTime,
cExecStep29.Index, InstanceId, Status)

End Sub

Private Sub cExecStep29_StepStart(cStepRecord As
cStep, _
        dtmStartTime As Currency, InstanceId As Long)

    Call TimeStartUpdateForStep(cStepRecord,
InstanceId, dtmStartTime)

End Sub

Private Sub cExecStep30_ProcessComplete(cStepRecord
As cStep, _
        dtmEndTime As Currency, lngInstanceId As
Long, lElapsed As Long)

    Call TimeUpdateForProcess(cStepRecord,
lngInstanceId, EndTime:=dtmEndTime,
ElapsedTime:=lElapsed)

End Sub

Private Sub cExecStep30_ProcessStart(cStepRecord As
cStep, _
        strCommand As String, dtmStartTime As
Currency, lngInstanceId As Long)

    Call TimeUpdateForProcess(cStepRecord,
lngInstanceId, StartTime:=dtmStartTime,
Command:=strCommand)

End Sub

Private Sub cExecStep30_StepComplete(cStepRecord As
cStep, _
        dtmEndTime As Currency, InstanceId As Long,
Status As InstanceStatus)

    Call StepTerminated(cStepRecord, dtmEndTime,
cExecStep30.Index, InstanceId, Status)

End Sub

Private Sub cExecStep30_StepStart(cStepRecord As
cStep, _
        dtmStartTime As Currency, InstanceId As Long)

    Call TimeStartUpdateForStep(cStepRecord,
InstanceId, dtmStartTime)

End Sub

Private Sub cExecStep31_ProcessComplete(cStepRecord
As cStep, _
        dtmEndTime As Currency, lngInstanceId As
Long, lElapsed As Long)

    Call TimeUpdateForProcess(cStepRecord,
lngInstanceId, EndTime:=dtmEndTime,
ElapsedTime:=lElapsed)

End Sub

Private Sub cExecStep31_ProcessStart(cStepRecord As
cStep, _
        strCommand As String, dtmStartTime As
Currency, lngInstanceId As Long)

    Call TimeUpdateForProcess(cStepRecord,
lngInstanceId, StartTime:=dtmStartTime,
Command:=strCommand)

End Sub

Private Sub cExecStep31_StepComplete(cStepRecord As
cStep, _
        dtmEndTime As Currency, InstanceId As Long,
Status As InstanceStatus)

    Call StepTerminated(cStepRecord, dtmEndTime,
cExecStep31.Index, InstanceId, Status)

End Sub

Private Sub cExecStep31_StepStart(cStepRecord As
cStep, _
        dtmStartTime As Currency, InstanceId As Long)

    Call TimeStartUpdateForStep(cStepRecord,
InstanceId, dtmStartTime)

End Sub

Private Sub cExecStep32_ProcessComplete(cStepRecord
As cStep, _
        dtmEndTime As Currency, lngInstanceId As
Long, lElapsed As Long)

    Call TimeUpdateForProcess(cStepRecord,
lngInstanceId, EndTime:=dtmEndTime,
ElapsedTime:=lElapsed)

End Sub

Private Sub cExecStep32_ProcessStart(cStepRecord As
cStep, _
        strCommand As String, dtmStartTime As
Currency, lngInstanceId As Long)

    Call TimeUpdateForProcess(cStepRecord,
lngInstanceId, StartTime:=dtmStartTime,
Command:=strCommand)

End Sub

Private Sub cExecStep32_StepComplete(cStepRecord As
cStep, _
        dtmEndTime As Currency, InstanceId As Long,
Status As InstanceStatus)

    Call StepTerminated(cStepRecord, dtmEndTime,
cExecStep32.Index, InstanceId, Status)

End Sub

Private Sub cExecStep32_StepStart(cStepRecord As
cStep, _
        dtmStartTime As Currency, InstanceId As Long)

    Call TimeStartUpdateForStep(cStepRecord,
InstanceId, dtmStartTime)

End Sub

Private Sub cExecStep33_ProcessComplete(cStepRecord
As cStep, _
        dtmEndTime As Currency, lngInstanceId As
Long, lElapsed As Long)

    Call TimeUpdateForProcess(cStepRecord,
lngInstanceId, EndTime:=dtmEndTime,
ElapsedTime:=lElapsed)

End Sub

Private Sub cExecStep33_ProcessStart(cStepRecord As
cStep, _
        strCommand As String, dtmStartTime As
Currency, lngInstanceId As Long)

    Call TimeUpdateForProcess(cStepRecord,
lngInstanceId, StartTime:=dtmStartTime,
Command:=strCommand)

End Sub
```


© 2006 Hewlett-Packard Company. All rights reserved.

```
Private Sub cExecStep33_StepComplete(cStepRecord As
cStep, _
        dtmEndTime As Currency, InstanceId As Long,
Status As InstanceStatus)

    Call StepTerminated(cStepRecord, dtmEndTime,
cExecStep33.Index, InstanceId, Status)

End Sub

Private Sub cExecStep33_StepStart(cStepRecord As
cStep, _
        dtmStartTime As Currency, InstanceId As Long)

    Call TimeStartUpdateForStep(cStepRecord,
InstanceId, dtmStartTime)

End Sub

Private Sub cExecStep34_ProcessComplete(cStepRecord
As cStep, _
        dtmEndTime As Currency, lngInstanceId As
Long, lElapsed As Long)

    Call TimeUpdateForProcess(cStepRecord,
lngInstanceId, EndTime:=dtmEndTime,
ElapsedTime:=lElapsed)

End Sub

Private Sub cExecStep34_ProcessStart(cStepRecord As
cStep, _
        strCommand As String, dtmStartTime As
Currency, lngInstanceId As Long)

    Call TimeUpdateForProcess(cStepRecord,
lngInstanceId, StartTime:=dtmStartTime,
Command:=strCommand)

End Sub

Private Sub cExecStep34_StepComplete(cStepRecord As
cStep, _
        dtmEndTime As Currency, InstanceId As Long,
Status As InstanceStatus)

    Call StepTerminated(cStepRecord, dtmEndTime,
cExecStep34.Index, InstanceId, Status)

End Sub

Private Sub cExecStep34_StepStart(cStepRecord As
cStep, _
        dtmStartTime As Currency, InstanceId As Long)

    Call TimeStartUpdateForStep(cStepRecord,
InstanceId, dtmStartTime)

End Sub

Private Sub cExecStep35_ProcessComplete(cStepRecord
As cStep, _
        dtmEndTime As Currency, lngInstanceId As
Long, lElapsed As Long)

    Call TimeUpdateForProcess(cStepRecord,
lngInstanceId, EndTime:=dtmEndTime,
ElapsedTime:=lElapsed)

End Sub

Private Sub cExecStep35_ProcessStart(cStepRecord As
cStep, _
        strCommand As String, dtmStartTime As
Currency, lngInstanceId As Long)

    Call TimeUpdateForProcess(cStepRecord,
lngInstanceId, StartTime:=dtmStartTime,
Command:=strCommand)

End Sub

Private Sub cExecStep35_StepComplete(cStepRecord As
cStep, _
        dtmEndTime As Currency, InstanceId As Long,
Status As InstanceStatus)

    Call StepTerminated(cStepRecord, dtmEndTime,
cExecStep35.Index, InstanceId, Status)

End Sub

Private Sub cExecStep35_StepStart(cStepRecord As
cStep, _
        dtmStartTime As Currency, InstanceId As Long)

    Call TimeStartUpdateForStep(cStepRecord,
InstanceId, dtmStartTime)

End Sub

Private Sub cExecStep36_ProcessComplete(cStepRecord
As cStep, _
        dtmEndTime As Currency, lngInstanceId As
Long, lElapsed As Long)

    Call TimeUpdateForProcess(cStepRecord,
lngInstanceId, EndTime:=dtmEndTime,
ElapsedTime:=lElapsed)

End Sub

Private Sub cExecStep36_ProcessStart(cStepRecord As
cStep, _
        strCommand As String, dtmStartTime As
Currency, lngInstanceId As Long)

    Call TimeUpdateForProcess(cStepRecord,
lngInstanceId, StartTime:=dtmStartTime,
Command:=strCommand)

End Sub

Private Sub cExecStep36_StepComplete(cStepRecord As
cStep, _
        dtmEndTime As Currency, InstanceId As Long,
Status As InstanceStatus)

    Call StepTerminated(cStepRecord, dtmEndTime,
cExecStep36.Index, InstanceId, Status)

End Sub

Private Sub cExecStep36_StepStart(cStepRecord As
cStep, _
        dtmStartTime As Currency, InstanceId As Long)

    Call TimeStartUpdateForStep(cStepRecord,
InstanceId, dtmStartTime)

End Sub

Private Sub cExecStep37_ProcessComplete(cStepRecord
As cStep, _
        dtmEndTime As Currency, lngInstanceId As
Long, lElapsed As Long)

    Call TimeUpdateForProcess(cStepRecord,
lngInstanceId, EndTime:=dtmEndTime,
ElapsedTime:=lElapsed)

End Sub

Private Sub cExecStep37_ProcessStart(cStepRecord As
cStep, _
        strCommand As String, dtmStartTime As
Currency, lngInstanceId As Long)

    Call TimeUpdateForProcess(cStepRecord,
lngInstanceId, StartTime:=dtmStartTime,
Command:=strCommand)

End Sub

Private Sub cExecStep37_StepComplete(cStepRecord As
cStep, _
        dtmEndTime As Currency, InstanceId As Long,
Status As InstanceStatus)

    Call StepTerminated(cStepRecord, dtmEndTime,
cExecStep37.Index, InstanceId, Status)

End Sub

Private Sub cExecStep37_StepStart(cStepRecord As
cStep, _
        dtmStartTime As Currency, InstanceId As Long)

    Call TimeStartUpdateForStep(cStepRecord,
InstanceId, dtmStartTime)

End Sub

Private Sub cExecStep38_ProcessComplete(cStepRecord
As cStep, _
        dtmEndTime As Currency, lngInstanceId As
Long, lElapsed As Long)
```


© 2006 Hewlett-Packard Company. All rights reserved.

```
    Call TimeUpdateForProcess(cStepRecord,
lngInstanceId, EndTime:=dtmEndTime,
ElapsedTime:=lElapsed)

End Sub

Private Sub cExecStep38_ProcessStart(cStepRecord As
cStep, _
        strCommand As String, dtmStartTime As
Currency, lngInstanceId As Long)

    Call TimeUpdateForProcess(cStepRecord,
lngInstanceId, StartTime:=dtmStartTime,
Command:=strCommand)

End Sub

Private Sub cExecStep38_StepComplete(cStepRecord As
cStep, _
        dtmEndTime As Currency, InstanceId As Long,
Status As InstanceStatus)

    Call StepTerminated(cStepRecord, dtmEndTime,
cExecStep38.Index, InstanceId, Status)

End Sub

Private Sub cExecStep38_StepStart(cStepRecord As
cStep, _
        dtmStartTime As Currency, InstanceId As Long)

    Call TimeStartUpdateForStep(cStepRecord,
InstanceId, dtmStartTime)

End Sub

Private Sub cExecStep39_ProcessComplete(cStepRecord
As cStep, _
        dtmEndTime As Currency, lngInstanceId As
Long, lElapsed As Long)

    Call TimeUpdateForProcess(cStepRecord,
lngInstanceId, EndTime:=dtmEndTime,
ElapsedTime:=lElapsed)

End Sub

Private Sub cExecStep39_ProcessStart(cStepRecord As
cStep, _
        strCommand As String, dtmStartTime As
Currency, lngInstanceId As Long)

    Call TimeUpdateForProcess(cStepRecord,
lngInstanceId, StartTime:=dtmStartTime,
Command:=strCommand)

End Sub

Private Sub cExecStep39_StepComplete(cStepRecord As
cStep, _
        dtmEndTime As Currency, InstanceId As Long,
Status As InstanceStatus)

    Call StepTerminated(cStepRecord, dtmEndTime,
cExecStep39.Index, InstanceId, Status)

End Sub

Private Sub cExecStep39_StepStart(cStepRecord As
cStep, _
        dtmStartTime As Currency, InstanceId As Long)

    Call TimeStartUpdateForStep(cStepRecord,
InstanceId, dtmStartTime)

End Sub

Private Sub cExecStep40_ProcessComplete(cStepRecord
As cStep, _
        dtmEndTime As Currency, lngInstanceId As
Long, lElapsed As Long)

    Call TimeUpdateForProcess(cStepRecord,
lngInstanceId, EndTime:=dtmEndTime,
ElapsedTime:=lElapsed)

End Sub

Private Sub cExecStep40_ProcessStart(cStepRecord As
cStep, _
        strCommand As String, dtmStartTime As
Currency, lngInstanceId As Long)

    Call TimeUpdateForProcess(cStepRecord,
lngInstanceId, StartTime:=dtmStartTime,
Command:=strCommand)

End Sub

Private Sub cExecStep40_StepComplete(cStepRecord As
cStep, _
        dtmEndTime As Currency, InstanceId As Long,
Status As InstanceStatus)

    Call StepTerminated(cStepRecord, dtmEndTime,
cExecStep40.Index, InstanceId, Status)

End Sub

Private Sub cExecStep40_StepStart(cStepRecord As
cStep, _
        dtmStartTime As Currency, InstanceId As Long)

    Call TimeStartUpdateForStep(cStepRecord,
InstanceId, dtmStartTime)

End Sub

Private Sub cExecStep41_ProcessComplete(cStepRecord
As cStep, _
        dtmEndTime As Currency, lngInstanceId As
Long, lElapsed As Long)

    Call TimeUpdateForProcess(cStepRecord,
lngInstanceId, EndTime:=dtmEndTime,
ElapsedTime:=lElapsed)

End Sub

Private Sub cExecStep41_ProcessStart(cStepRecord As
cStep, _
        strCommand As String, dtmStartTime As
Currency, lngInstanceId As Long)

    Call TimeUpdateForProcess(cStepRecord,
lngInstanceId, StartTime:=dtmStartTime,
Command:=strCommand)

End Sub

Private Sub cExecStep41_StepComplete(cStepRecord As
cStep, _
        dtmEndTime As Currency, InstanceId As Long,
Status As InstanceStatus)

    Call StepTerminated(cStepRecord, dtmEndTime,
cExecStep41.Index, InstanceId, Status)

End Sub

Private Sub cExecStep41_StepStart(cStepRecord As
cStep, _
        dtmStartTime As Currency, InstanceId As Long)

    Call TimeStartUpdateForStep(cStepRecord,
InstanceId, dtmStartTime)

End Sub

Private Sub cExecStep42_ProcessComplete(cStepRecord
As cStep, _
        dtmEndTime As Currency, lngInstanceId As
Long, lElapsed As Long)

    Call TimeUpdateForProcess(cStepRecord,
lngInstanceId, EndTime:=dtmEndTime,
ElapsedTime:=lElapsed)

End Sub

Private Sub cExecStep42_ProcessStart(cStepRecord As
cStep, _
        strCommand As String, dtmStartTime As
Currency, lngInstanceId As Long)

    Call TimeUpdateForProcess(cStepRecord,
lngInstanceId, StartTime:=dtmStartTime,
Command:=strCommand)

End Sub

Private Sub cExecStep42_StepComplete(cStepRecord As
cStep, _
        dtmEndTime As Currency, InstanceId As Long,
Status As InstanceStatus)

    Call StepTerminated(cStepRecord, dtmEndTime,
cExecStep42.Index, InstanceId, Status)
```


© 2006 Hewlett-Packard Company. All rights reserved.

```
End Sub

Private Sub cExecStep42_StepStart(cStepRecord As
cStep, _
        dtmStartTime As Currency, InstanceId As Long)

    Call TimeStartUpdateForStep(cStepRecord,
InstanceId, dtmStartTime)

End Sub

Private Sub cExecStep43_ProcessComplete(cStepRecord
As cStep, _
        dtmEndTime As Currency, lngInstanceId As
Long, lElapsed As Long)

    Call TimeUpdateForProcess(cStepRecord,
lngInstanceId, EndTime:=dtmEndTime,
ElapsedTime:=lElapsed)

End Sub

Private Sub cExecStep43_ProcessStart(cStepRecord As
cStep, _
        strCommand As String, dtmStartTime As
Currency, lngInstanceId As Long)

    Call TimeUpdateForProcess(cStepRecord,
lngInstanceId, StartTime:=dtmStartTime,
Command:=strCommand)

End Sub

Private Sub cExecStep43_StepComplete(cStepRecord As
cStep, _
        dtmEndTime As Currency, InstanceId As Long,
Status As InstanceStatus)

    Call StepTerminated(cStepRecord, dtmEndTime,
cExecStep43.Index, InstanceId, Status)

End Sub

Private Sub cExecStep43_StepStart(cStepRecord As
cStep, _
        dtmStartTime As Currency, InstanceId As Long)

    Call TimeStartUpdateForStep(cStepRecord,
InstanceId, dtmStartTime)

End Sub

Private Sub cExecStep44_ProcessComplete(cStepRecord
As cStep, _
        dtmEndTime As Currency, lngInstanceId As
Long, lElapsed As Long)

    Call TimeUpdateForProcess(cStepRecord,
lngInstanceId, EndTime:=dtmEndTime,
ElapsedTime:=lElapsed)

End Sub

Private Sub cExecStep44_ProcessStart(cStepRecord As
cStep, _
        strCommand As String, dtmStartTime As
Currency, lngInstanceId As Long)

    Call TimeUpdateForProcess(cStepRecord,
lngInstanceId, StartTime:=dtmStartTime,
Command:=strCommand)

End Sub

Private Sub cExecStep44_StepComplete(cStepRecord As
cStep, _
        dtmEndTime As Currency, InstanceId As Long,
Status As InstanceStatus)

    Call StepTerminated(cStepRecord, dtmEndTime,
cExecStep44.Index, InstanceId, Status)

End Sub

Private Sub cExecStep44_StepStart(cStepRecord As
cStep, _
        dtmStartTime As Currency, InstanceId As Long)

    Call TimeStartUpdateForStep(cStepRecord,
InstanceId, dtmStartTime)

End Sub

Private Sub cExecStep45_ProcessComplete(cStepRecord
As cStep, _
        dtmEndTime As Currency, lngInstanceId As
Long, lElapsed As Long)

    Call TimeUpdateForProcess(cStepRecord,
lngInstanceId, EndTime:=dtmEndTime,
ElapsedTime:=lElapsed)

End Sub

Private Sub cExecStep45_ProcessStart(cStepRecord As
cStep, _
        strCommand As String, dtmStartTime As
Currency, lngInstanceId As Long)

    Call TimeUpdateForProcess(cStepRecord,
lngInstanceId, StartTime:=dtmStartTime,
Command:=strCommand)

End Sub

Private Sub cExecStep45_StepComplete(cStepRecord As
cStep, _
        dtmEndTime As Currency, InstanceId As Long,
Status As InstanceStatus)

    Call StepTerminated(cStepRecord, dtmEndTime,
cExecStep45.Index, InstanceId, Status)

End Sub

Private Sub cExecStep45_StepStart(cStepRecord As
cStep, _
        dtmStartTime As Currency, InstanceId As Long)

    Call TimeStartUpdateForStep(cStepRecord,
InstanceId, dtmStartTime)

End Sub

Private Sub cExecStep46_ProcessComplete(cStepRecord
As cStep, _
        dtmEndTime As Currency, lngInstanceId As
Long, lElapsed As Long)

    Call TimeUpdateForProcess(cStepRecord,
lngInstanceId, EndTime:=dtmEndTime,
ElapsedTime:=lElapsed)

End Sub

Private Sub cExecStep46_ProcessStart(cStepRecord As
cStep, _
        strCommand As String, dtmStartTime As
Currency, lngInstanceId As Long)

    Call TimeUpdateForProcess(cStepRecord,
lngInstanceId, StartTime:=dtmStartTime,
Command:=strCommand)

End Sub

Private Sub cExecStep46_StepComplete(cStepRecord As
cStep, _
        dtmEndTime As Currency, InstanceId As Long,
Status As InstanceStatus)

    Call StepTerminated(cStepRecord, dtmEndTime,
cExecStep46.Index, InstanceId, Status)

End Sub

Private Sub cExecStep46_StepStart(cStepRecord As
cStep, _
        dtmStartTime As Currency, InstanceId As Long)

    Call TimeStartUpdateForStep(cStepRecord,
InstanceId, dtmStartTime)

End Sub

Private Sub cExecStep47_ProcessComplete(cStepRecord
As cStep, _
        dtmEndTime As Currency, lngInstanceId As
Long, lElapsed As Long)

    Call TimeUpdateForProcess(cStepRecord,
lngInstanceId, EndTime:=dtmEndTime,
ElapsedTime:=lElapsed)

End Sub

Private Sub cExecStep47_ProcessStart(cStepRecord As
cStep, _
```


© 2006 Hewlett-Packard Company. All rights reserved.

```
        strCommand As String, dtmStartTime As
Currency, lngInstanceId As Long)

    Call TimeUpdateForProcess(cStepRecord,
lngInstanceId, StartTime:=dtmStartTime,
Command:=strCommand)

End Sub

Private Sub cExecStep47_StepComplete(cStepRecord As
cStep, _
        dtmEndTime As Currency, InstanceId As Long,
Status As InstanceStatus)

    Call StepTerminated(cStepRecord, dtmEndTime,
cExecStep47.Index, InstanceId, Status)

End Sub

Private Sub cExecStep47_StepStart(cStepRecord As
cStep, _
        dtmStartTime As Currency, InstanceId As Long)

    Call TimeStartUpdateForStep(cStepRecord,
InstanceId, dtmStartTime)

End Sub

Private Sub cExecStep48_ProcessComplete(cStepRecord
As cStep, _
        dtmEndTime As Currency, lngInstanceId As
Long, lElapsed As Long)

    Call TimeUpdateForProcess(cStepRecord,
lngInstanceId, EndTime:=dtmEndTime,
ElapsedTime:=lElapsed)

End Sub

Private Sub cExecStep48_ProcessStart(cStepRecord As
cStep, _
        strCommand As String, dtmStartTime As
Currency, lngInstanceId As Long)

    Call TimeUpdateForProcess(cStepRecord,
lngInstanceId, StartTime:=dtmStartTime,
Command:=strCommand)

End Sub

Private Sub cExecStep48_StepComplete(cStepRecord As
cStep, _
        dtmEndTime As Currency, InstanceId As Long,
Status As InstanceStatus)

    Call StepTerminated(cStepRecord, dtmEndTime,
cExecStep48.Index, InstanceId, Status)

End Sub

Private Sub cExecStep48_StepStart(cStepRecord As
cStep, _
        dtmStartTime As Currency, InstanceId As Long)

    Call TimeStartUpdateForStep(cStepRecord,
InstanceId, dtmStartTime)

End Sub

Private Sub cExecStep49_ProcessComplete(cStepRecord
As cStep, _
        dtmEndTime As Currency, lngInstanceId As
Long, lElapsed As Long)

    Call TimeUpdateForProcess(cStepRecord,
lngInstanceId, EndTime:=dtmEndTime,
ElapsedTime:=lElapsed)

End Sub

Private Sub cExecStep49_ProcessStart(cStepRecord As
cStep, _
        strCommand As String, dtmStartTime As
Currency, lngInstanceId As Long)

    Call TimeUpdateForProcess(cStepRecord,
lngInstanceId, StartTime:=dtmStartTime,
Command:=strCommand)

End Sub

Private Sub cExecStep49_StepComplete(cStepRecord As
cStep, _
        dtmEndTime As Currency, InstanceId As Long,
Status As InstanceStatus)

    Call StepTerminated(cStepRecord, dtmEndTime,
cExecStep49.Index, InstanceId, Status)

End Sub

Private Sub cExecStep49_StepStart(cStepRecord As
cStep, _
        dtmStartTime As Currency, InstanceId As Long)

    Call TimeStartUpdateForStep(cStepRecord,
InstanceId, dtmStartTime)

End Sub

Private Sub cExecStep50_ProcessComplete(cStepRecord
As cStep, _
        dtmEndTime As Currency, lngInstanceId As
Long, lElapsed As Long)

    Call TimeUpdateForProcess(cStepRecord,
lngInstanceId, EndTime:=dtmEndTime,
ElapsedTime:=lElapsed)

End Sub

Private Sub cExecStep50_ProcessStart(cStepRecord As
cStep, _
        strCommand As String, dtmStartTime As
Currency, lngInstanceId As Long)

    Call TimeUpdateForProcess(cStepRecord,
lngInstanceId, StartTime:=dtmStartTime,
Command:=strCommand)

End Sub

Private Sub cExecStep50_StepComplete(cStepRecord As
cStep, _
        dtmEndTime As Currency, InstanceId As Long,
Status As InstanceStatus)

    Call StepTerminated(cStepRecord, dtmEndTime,
cExecStep50.Index, InstanceId, Status)

End Sub

Private Sub cExecStep50_StepStart(cStepRecord As
cStep, _
        dtmStartTime As Currency, InstanceId As Long)

    Call TimeStartUpdateForStep(cStepRecord,
InstanceId, dtmStartTime)

End Sub

Private Sub cExecStep51_ProcessComplete(cStepRecord
As cStep, _
        dtmEndTime As Currency, lngInstanceId As
Long, lElapsed As Long)

    Call TimeUpdateForProcess(cStepRecord,
lngInstanceId, EndTime:=dtmEndTime,
ElapsedTime:=lElapsed)

End Sub

Private Sub cExecStep51_ProcessStart(cStepRecord As
cStep, _
        strCommand As String, dtmStartTime As
Currency, lngInstanceId As Long)

    Call TimeUpdateForProcess(cStepRecord,
lngInstanceId, StartTime:=dtmStartTime,
Command:=strCommand)

End Sub

Private Sub cExecStep51_StepComplete(cStepRecord As
cStep, _
        dtmEndTime As Currency, InstanceId As Long,
Status As InstanceStatus)

    Call StepTerminated(cStepRecord, dtmEndTime,
cExecStep51.Index, InstanceId, Status)

End Sub

Private Sub cExecStep51_StepStart(cStepRecord As
cStep, _
        dtmStartTime As Currency, InstanceId As Long)

    Call TimeStartUpdateForStep(cStepRecord,
InstanceId, dtmStartTime)
```


© 2006 Hewlett-Packard Company. All rights reserved.

```
End Sub

Private Sub cExecStep52_ProcessComplete(cStepRecord
As cStep, _
        dtmEndTime As Currency, lngInstanceId As
Long, lElapsed As Long)

    Call TimeUpdateForProcess(cStepRecord,
lngInstanceId, EndTime:=dtmEndTime,
ElapsedTime:=lElapsed)

End Sub

Private Sub cExecStep52_ProcessStart(cStepRecord As
cStep, _
        strCommand As String, dtmStartTime As
Currency, lngInstanceId As Long)

    Call TimeUpdateForProcess(cStepRecord,
lngInstanceId, StartTime:=dtmStartTime,
Command:=strCommand)

End Sub

Private Sub cExecStep52_StepComplete(cStepRecord As
cStep, _
        dtmEndTime As Currency, InstanceId As Long,
Status As InstanceStatus)

    Call StepTerminated(cStepRecord, dtmEndTime,
cExecStep52.Index, InstanceId, Status)

End Sub

Private Sub cExecStep52_StepStart(cStepRecord As
cStep, _
        dtmStartTime As Currency, InstanceId As Long)

    Call TimeStartUpdateForStep(cStepRecord,
InstanceId, dtmStartTime)

End Sub

Private Sub cExecStep53_ProcessComplete(cStepRecord
As cStep, _
        dtmEndTime As Currency, lngInstanceId As
Long, lElapsed As Long)

    Call TimeUpdateForProcess(cStepRecord,
lngInstanceId, EndTime:=dtmEndTime,
ElapsedTime:=lElapsed)

End Sub

Private Sub cExecStep53_ProcessStart(cStepRecord As
cStep, _
        strCommand As String, dtmStartTime As
Currency, lngInstanceId As Long)

    Call TimeUpdateForProcess(cStepRecord,
lngInstanceId, StartTime:=dtmStartTime,
Command:=strCommand)

End Sub

Private Sub cExecStep53_StepComplete(cStepRecord As
cStep, _
        dtmEndTime As Currency, InstanceId As Long,
Status As InstanceStatus)

    Call StepTerminated(cStepRecord, dtmEndTime,
cExecStep53.Index, InstanceId, Status)

End Sub

Private Sub cExecStep53_StepStart(cStepRecord As
cStep, _
        dtmStartTime As Currency, InstanceId As Long)

    Call TimeStartUpdateForStep(cStepRecord,
InstanceId, dtmStartTime)

End Sub

Private Sub cExecStep54_ProcessComplete(cStepRecord
As cStep, _
        dtmEndTime As Currency, lngInstanceId As
Long, lElapsed As Long)

    Call TimeUpdateForProcess(cStepRecord,
lngInstanceId, EndTime:=dtmEndTime,
ElapsedTime:=lElapsed)

End Sub

Private Sub cExecStep54_ProcessStart(cStepRecord As
cStep, _
        strCommand As String, dtmStartTime As
Currency, lngInstanceId As Long)

    Call TimeUpdateForProcess(cStepRecord,
lngInstanceId, StartTime:=dtmStartTime,
Command:=strCommand)

End Sub

Private Sub cExecStep54_StepComplete(cStepRecord As
cStep, _
        dtmEndTime As Currency, InstanceId As Long,
Status As InstanceStatus)

    Call StepTerminated(cStepRecord, dtmEndTime,
cExecStep54.Index, InstanceId, Status)

End Sub

Private Sub cExecStep54_StepStart(cStepRecord As
cStep, _
        dtmStartTime As Currency, InstanceId As Long)

    Call TimeStartUpdateForStep(cStepRecord,
InstanceId, dtmStartTime)

End Sub

Private Sub cExecStep55_ProcessComplete(cStepRecord
As cStep, _
        dtmEndTime As Currency, lngInstanceId As
Long, lElapsed As Long)

    Call TimeUpdateForProcess(cStepRecord,
lngInstanceId, EndTime:=dtmEndTime,
ElapsedTime:=lElapsed)

End Sub

Private Sub cExecStep55_ProcessStart(cStepRecord As
cStep, _
        strCommand As String, dtmStartTime As
Currency, lngInstanceId As Long)

    Call TimeUpdateForProcess(cStepRecord,
lngInstanceId, StartTime:=dtmStartTime,
Command:=strCommand)

End Sub

Private Sub cExecStep55_StepComplete(cStepRecord As
cStep, _
        dtmEndTime As Currency, InstanceId As Long,
Status As InstanceStatus)

    Call StepTerminated(cStepRecord, dtmEndTime,
cExecStep55.Index, InstanceId, Status)

End Sub

Private Sub cExecStep55_StepStart(cStepRecord As
cStep, _
        dtmStartTime As Currency, InstanceId As Long)

    Call TimeStartUpdateForStep(cStepRecord,
InstanceId, dtmStartTime)

End Sub

Private Sub cExecStep56_ProcessComplete(cStepRecord
As cStep, _
        dtmEndTime As Currency, lngInstanceId As
Long, lElapsed As Long)

    Call TimeUpdateForProcess(cStepRecord,
lngInstanceId, EndTime:=dtmEndTime,
ElapsedTime:=lElapsed)

End Sub

Private Sub cExecStep56_ProcessStart(cStepRecord As
cStep, _
        strCommand As String, dtmStartTime As
Currency, lngInstanceId As Long)

    Call TimeUpdateForProcess(cStepRecord,
lngInstanceId, StartTime:=dtmStartTime,
Command:=strCommand)

End Sub
```


© 2006 Hewlett-Packard Company. All rights reserved.

```
Private Sub cExecStep56_StepComplete(cStepRecord As
cStep, _
        dtmEndTime As Currency, InstanceId As Long,
Status As InstanceStatus)

    Call StepTerminated(cStepRecord, dtmEndTime,
cExecStep56.Index, InstanceId, Status)

End Sub

Private Sub cExecStep56_StepStart(cStepRecord As
cStep, _
        dtmStartTime As Currency, InstanceId As Long)

    Call TimeStartUpdateForStep(cStepRecord,
InstanceId, dtmStartTime)

End Sub

Private Sub cExecStep57_ProcessComplete(cStepRecord
As cStep, _
        dtmEndTime As Currency, lngInstanceId As
Long, lElapsed As Long)

    Call TimeUpdateForProcess(cStepRecord,
lngInstanceId, EndTime:=dtmEndTime,
ElapsedTime:=lElapsed)

End Sub

Private Sub cExecStep57_ProcessStart(cStepRecord As
cStep, _
        strCommand As String, dtmStartTime As
Currency, lngInstanceId As Long)

    Call TimeUpdateForProcess(cStepRecord,
lngInstanceId, StartTime:=dtmStartTime,
Command:=strCommand)

End Sub

Private Sub cExecStep57_StepComplete(cStepRecord As
cStep, _
        dtmEndTime As Currency, InstanceId As Long,
Status As InstanceStatus)

    Call StepTerminated(cStepRecord, dtmEndTime,
cExecStep57.Index, InstanceId, Status)

End Sub

Private Sub cExecStep57_StepStart(cStepRecord As
cStep, _
        dtmStartTime As Currency, InstanceId As Long)

    Call TimeStartUpdateForStep(cStepRecord,
InstanceId, dtmStartTime)

End Sub

Private Sub cExecStep58_ProcessComplete(cStepRecord
As cStep, _
        dtmEndTime As Currency, lngInstanceId As
Long, lElapsed As Long)

    Call TimeUpdateForProcess(cStepRecord,
lngInstanceId, EndTime:=dtmEndTime,
ElapsedTime:=lElapsed)

End Sub

Private Sub cExecStep58_ProcessStart(cStepRecord As
cStep, _
        strCommand As String, dtmStartTime As
Currency, lngInstanceId As Long)

    Call TimeUpdateForProcess(cStepRecord,
lngInstanceId, StartTime:=dtmStartTime,
Command:=strCommand)

End Sub

Private Sub cExecStep58_StepComplete(cStepRecord As
cStep, _
        dtmEndTime As Currency, InstanceId As Long,
Status As InstanceStatus)

    Call StepTerminated(cStepRecord, dtmEndTime,
cExecStep58.Index, InstanceId, Status)

End Sub

Private Sub cExecStep58_StepStart(cStepRecord As
cStep, _
        dtmStartTime As Currency, InstanceId As Long)

    Call TimeStartUpdateForStep(cStepRecord,
InstanceId, dtmStartTime)

End Sub

Private Sub cExecStep59_ProcessComplete(cStepRecord
As cStep, _
        dtmEndTime As Currency, lngInstanceId As
Long, lElapsed As Long)

    Call TimeUpdateForProcess(cStepRecord,
lngInstanceId, EndTime:=dtmEndTime,
ElapsedTime:=lElapsed)

End Sub

Private Sub cExecStep59_ProcessStart(cStepRecord As
cStep, _
        strCommand As String, dtmStartTime As
Currency, lngInstanceId As Long)

    Call TimeUpdateForProcess(cStepRecord,
lngInstanceId, StartTime:=dtmStartTime,
Command:=strCommand)

End Sub

Private Sub cExecStep59_StepComplete(cStepRecord As
cStep, _
        dtmEndTime As Currency, InstanceId As Long,
Status As InstanceStatus)

    Call StepTerminated(cStepRecord, dtmEndTime,
cExecStep59.Index, InstanceId, Status)

End Sub

Private Sub cExecStep59_StepStart(cStepRecord As
cStep, _
        dtmStartTime As Currency, InstanceId As Long)

    Call TimeStartUpdateForStep(cStepRecord,
InstanceId, dtmStartTime)

End Sub

Private Sub cExecStep60_ProcessComplete(cStepRecord
As cStep, _
        dtmEndTime As Currency, lngInstanceId As
Long, lElapsed As Long)

    Call TimeUpdateForProcess(cStepRecord,
lngInstanceId, EndTime:=dtmEndTime,
ElapsedTime:=lElapsed)

End Sub

Private Sub cExecStep60_ProcessStart(cStepRecord As
cStep, _
        strCommand As String, dtmStartTime As
Currency, lngInstanceId As Long)

    Call TimeUpdateForProcess(cStepRecord,
lngInstanceId, StartTime:=dtmStartTime,
Command:=strCommand)

End Sub

Private Sub cExecStep60_StepComplete(cStepRecord As
cStep, _
        dtmEndTime As Currency, InstanceId As Long,
Status As InstanceStatus)

    Call StepTerminated(cStepRecord, dtmEndTime,
cExecStep60.Index, InstanceId, Status)

End Sub

Private Sub cExecStep60_StepStart(cStepRecord As
cStep, _
        dtmStartTime As Currency, InstanceId As Long)

    Call TimeStartUpdateForStep(cStepRecord,
InstanceId, dtmStartTime)

End Sub

Private Sub cExecStep61_ProcessComplete(cStepRecord
As cStep, _
        dtmEndTime As Currency, lngInstanceId As
Long, lElapsed As Long)
```


© 2006 Hewlett-Packard Company. All rights reserved.

```
    Call TimeUpdateForProcess(cStepRecord,
lngInstanceId, EndTime:=dtmEndTime,
ElapsedTime:=lElapsed)

End Sub

Private Sub cExecStep61_ProcessStart(cStepRecord As
cStep, _
        strCommand As String, dtmStartTime As
Currency, lngInstanceId As Long)

    Call TimeUpdateForProcess(cStepRecord,
lngInstanceId, StartTime:=dtmStartTime,
Command:=strCommand)

End Sub

Private Sub cExecStep61_StepComplete(cStepRecord As
cStep, _
        dtmEndTime As Currency, InstanceId As Long,
Status As InstanceStatus)

    Call StepTerminated(cStepRecord, dtmEndTime,
cExecStep61.Index, InstanceId, Status)

End Sub

Private Sub cExecStep61_StepStart(cStepRecord As
cStep, _
        dtmStartTime As Currency, InstanceId As Long)

    Call TimeStartUpdateForStep(cStepRecord,
InstanceId, dtmStartTime)

End Sub

Private Sub cExecStep62_ProcessComplete(cStepRecord
As cStep, _
        dtmEndTime As Currency, lngInstanceId As
Long, lElapsed As Long)

    Call TimeUpdateForProcess(cStepRecord,
lngInstanceId, EndTime:=dtmEndTime,
ElapsedTime:=lElapsed)

End Sub

Private Sub cExecStep62_ProcessStart(cStepRecord As
cStep, _
        strCommand As String, dtmStartTime As
Currency, lngInstanceId As Long)

    Call TimeUpdateForProcess(cStepRecord,
lngInstanceId, StartTime:=dtmStartTime,
Command:=strCommand)

End Sub

Private Sub cExecStep62_StepComplete(cStepRecord As
cStep, _
        dtmEndTime As Currency, InstanceId As Long,
Status As InstanceStatus)

    Call StepTerminated(cStepRecord, dtmEndTime,
cExecStep62.Index, InstanceId, Status)

End Sub

Private Sub cExecStep62_StepStart(cStepRecord As
cStep, _
        dtmStartTime As Currency, InstanceId As Long)

    Call TimeStartUpdateForStep(cStepRecord,
InstanceId, dtmStartTime)

End Sub

Private Sub cExecStep63_ProcessComplete(cStepRecord
As cStep, _
        dtmEndTime As Currency, lngInstanceId As
Long, lElapsed As Long)

    Call TimeUpdateForProcess(cStepRecord,
lngInstanceId, EndTime:=dtmEndTime,
ElapsedTime:=lElapsed)

End Sub

Private Sub cExecStep63_ProcessStart(cStepRecord As
cStep, _
        strCommand As String, dtmStartTime As
Currency, lngInstanceId As Long)

    Call TimeUpdateForProcess(cStepRecord,
lngInstanceId, StartTime:=dtmStartTime,
Command:=strCommand)

End Sub

Private Sub cExecStep63_StepComplete(cStepRecord As
cStep, _
        dtmEndTime As Currency, InstanceId As Long,
Status As InstanceStatus)

    Call StepTerminated(cStepRecord, dtmEndTime,
cExecStep63.Index, InstanceId, Status)

End Sub

Private Sub cExecStep63_StepStart(cStepRecord As
cStep, _
        dtmStartTime As Currency, InstanceId As Long)

    Call TimeStartUpdateForStep(cStepRecord,
InstanceId, dtmStartTime)

End Sub

Private Sub cExecStep64_ProcessComplete(cStepRecord
As cStep, _
        dtmEndTime As Currency, lngInstanceId As
Long, lElapsed As Long)

    Call TimeUpdateForProcess(cStepRecord,
lngInstanceId, EndTime:=dtmEndTime,
ElapsedTime:=lElapsed)

End Sub

Private Sub cExecStep64_ProcessStart(cStepRecord As
cStep, _
        strCommand As String, dtmStartTime As
Currency, lngInstanceId As Long)

    Call TimeUpdateForProcess(cStepRecord,
lngInstanceId, StartTime:=dtmStartTime,
Command:=strCommand)

End Sub

Private Sub cExecStep64_StepComplete(cStepRecord As
cStep, _
        dtmEndTime As Currency, InstanceId As Long,
Status As InstanceStatus)

    Call StepTerminated(cStepRecord, dtmEndTime,
cExecStep64.Index, InstanceId, Status)

End Sub

Private Sub cExecStep64_StepStart(cStepRecord As
cStep, _
        dtmStartTime As Currency, InstanceId As Long)

    Call TimeStartUpdateForStep(cStepRecord,
InstanceId, dtmStartTime)

End Sub

Private Sub cExecStep65_ProcessComplete(cStepRecord
As cStep, _
        dtmEndTime As Currency, lngInstanceId As
Long, lElapsed As Long)

    Call TimeUpdateForProcess(cStepRecord,
lngInstanceId, EndTime:=dtmEndTime,
ElapsedTime:=lElapsed)

End Sub

Private Sub cExecStep65_ProcessStart(cStepRecord As
cStep, _
        strCommand As String, dtmStartTime As
Currency, lngInstanceId As Long)

    Call TimeUpdateForProcess(cStepRecord,
lngInstanceId, StartTime:=dtmStartTime,
Command:=strCommand)

End Sub

Private Sub cExecStep65_StepComplete(cStepRecord As
cStep, _
        dtmEndTime As Currency, InstanceId As Long,
Status As InstanceStatus)

    Call StepTerminated(cStepRecord, dtmEndTime,
cExecStep65.Index, InstanceId, Status)
```


© 2006 Hewlett-Packard Company. All rights reserved.

```
End Sub

Private Sub cExecStep65_StepStart(cStepRecord As
cStep, _
        dtmStartTime As Currency, InstanceId As Long)

    Call TimeStartUpdateForStep(cStepRecord,
InstanceId, dtmStartTime)

End Sub

Private Sub cExecStep66_ProcessComplete(cStepRecord
As cStep, _
        dtmEndTime As Currency, lngInstanceId As
Long, lElapsed As Long)

    Call TimeUpdateForProcess(cStepRecord,
lngInstanceId, EndTime:=dtmEndTime,
ElapsedTime:=lElapsed)

End Sub

Private Sub cExecStep66_ProcessStart(cStepRecord As
cStep, _
        strCommand As String, dtmStartTime As
Currency, lngInstanceId As Long)

    Call TimeUpdateForProcess(cStepRecord,
lngInstanceId, StartTime:=dtmStartTime,
Command:=strCommand)

End Sub

Private Sub cExecStep66_StepComplete(cStepRecord As
cStep, _
        dtmEndTime As Currency, InstanceId As Long,
Status As InstanceStatus)

    Call StepTerminated(cStepRecord, dtmEndTime,
cExecStep66.Index, InstanceId, Status)

End Sub

Private Sub cExecStep66_StepStart(cStepRecord As
cStep, _
        dtmStartTime As Currency, InstanceId As Long)

    Call TimeStartUpdateForStep(cStepRecord,
InstanceId, dtmStartTime)

End Sub

Private Sub cExecStep67_ProcessComplete(cStepRecord
As cStep, _
        dtmEndTime As Currency, lngInstanceId As
Long, lElapsed As Long)

    Call TimeUpdateForProcess(cStepRecord,
lngInstanceId, EndTime:=dtmEndTime,
ElapsedTime:=lElapsed)

End Sub

Private Sub cExecStep67_ProcessStart(cStepRecord As
cStep, _
        strCommand As String, dtmStartTime As
Currency, lngInstanceId As Long)

    Call TimeUpdateForProcess(cStepRecord,
lngInstanceId, StartTime:=dtmStartTime,
Command:=strCommand)

End Sub

Private Sub cExecStep67_StepComplete(cStepRecord As
cStep, _
        dtmEndTime As Currency, InstanceId As Long,
Status As InstanceStatus)

    Call StepTerminated(cStepRecord, dtmEndTime,
cExecStep67.Index, InstanceId, Status)

End Sub

Private Sub cExecStep67_StepStart(cStepRecord As
cStep, _
        dtmStartTime As Currency, InstanceId As Long)

    Call TimeStartUpdateForStep(cStepRecord,
InstanceId, dtmStartTime)

End Sub

Private Sub cExecStep68_ProcessComplete(cStepRecord
As cStep, _
        dtmEndTime As Currency, lngInstanceId As
Long, lElapsed As Long)

    Call TimeUpdateForProcess(cStepRecord,
lngInstanceId, EndTime:=dtmEndTime,
ElapsedTime:=lElapsed)

End Sub

Private Sub cExecStep68_ProcessStart(cStepRecord As
cStep, _
        strCommand As String, dtmStartTime As
Currency, lngInstanceId As Long)

    Call TimeUpdateForProcess(cStepRecord,
lngInstanceId, StartTime:=dtmStartTime,
Command:=strCommand)

End Sub

Private Sub cExecStep68_StepComplete(cStepRecord As
cStep, _
        dtmEndTime As Currency, InstanceId As Long,
Status As InstanceStatus)

    Call StepTerminated(cStepRecord, dtmEndTime,
cExecStep68.Index, InstanceId, Status)

End Sub

Private Sub cExecStep68_StepStart(cStepRecord As
cStep, _
        dtmStartTime As Currency, InstanceId As Long)

    Call TimeStartUpdateForStep(cStepRecord,
InstanceId, dtmStartTime)

End Sub

Private Sub cExecStep69_ProcessComplete(cStepRecord
As cStep, _
        dtmEndTime As Currency, lngInstanceId As
Long, lElapsed As Long)

    Call TimeUpdateForProcess(cStepRecord,
lngInstanceId, EndTime:=dtmEndTime,
ElapsedTime:=lElapsed)

End Sub

Private Sub cExecStep69_ProcessStart(cStepRecord As
cStep, _
        strCommand As String, dtmStartTime As
Currency, lngInstanceId As Long)

    Call TimeUpdateForProcess(cStepRecord,
lngInstanceId, StartTime:=dtmStartTime,
Command:=strCommand)

End Sub

Private Sub cExecStep69_StepComplete(cStepRecord As
cStep, _
        dtmEndTime As Currency, InstanceId As Long,
Status As InstanceStatus)

    Call StepTerminated(cStepRecord, dtmEndTime,
cExecStep69.Index, InstanceId, Status)

End Sub

Private Sub cExecStep69_StepStart(cStepRecord As
cStep, _
        dtmStartTime As Currency, InstanceId As Long)

    Call TimeStartUpdateForStep(cStepRecord,
InstanceId, dtmStartTime)

End Sub

Private Sub cExecStep70_ProcessComplete(cStepRecord
As cStep, _
        dtmEndTime As Currency, lngInstanceId As
Long, lElapsed As Long)

    Call TimeUpdateForProcess(cStepRecord,
lngInstanceId, EndTime:=dtmEndTime,
ElapsedTime:=lElapsed)

End Sub

Private Sub cExecStep70_ProcessStart(cStepRecord As
cStep, _
```


© 2006 Hewlett-Packard Company. All rights reserved.

```
        strCommand As String, dtmStartTime As
Currency, lngInstanceId As Long)

    Call TimeUpdateForProcess(cStepRecord,
lngInstanceId, StartTime:=dtmStartTime,
Command:=strCommand)

End Sub

Private Sub cExecStep70_StepComplete(cStepRecord As
cStep, _
        dtmEndTime As Currency, InstanceId As Long,
Status As InstanceStatus)

    Call StepTerminated(cStepRecord, dtmEndTime,
cExecStep70.Index, InstanceId, Status)

End Sub

Private Sub cExecStep70_StepStart(cStepRecord As
cStep, _
        dtmStartTime As Currency, InstanceId As Long)

    Call TimeStartUpdateForStep(cStepRecord,
InstanceId, dtmStartTime)

End Sub

Private Sub cExecStep71_ProcessComplete(cStepRecord
As cStep, _
        dtmEndTime As Currency, lngInstanceId As
Long, lElapsed As Long)

    Call TimeUpdateForProcess(cStepRecord,
lngInstanceId, EndTime:=dtmEndTime,
ElapsedTime:=lElapsed)

End Sub

Private Sub cExecStep71_ProcessStart(cStepRecord As
cStep, _
        strCommand As String, dtmStartTime As
Currency, lngInstanceId As Long)

    Call TimeUpdateForProcess(cStepRecord,
lngInstanceId, StartTime:=dtmStartTime,
Command:=strCommand)

End Sub

Private Sub cExecStep71_StepComplete(cStepRecord As
cStep, _
        dtmEndTime As Currency, InstanceId As Long,
Status As InstanceStatus)

    Call StepTerminated(cStepRecord, dtmEndTime,
cExecStep71.Index, InstanceId, Status)

End Sub

Private Sub cExecStep71_StepStart(cStepRecord As
cStep, _
        dtmStartTime As Currency, InstanceId As Long)

    Call TimeStartUpdateForStep(cStepRecord,
InstanceId, dtmStartTime)

End Sub

Private Sub cExecStep72_ProcessComplete(cStepRecord
As cStep, _
        dtmEndTime As Currency, lngInstanceId As
Long, lElapsed As Long)

    Call TimeUpdateForProcess(cStepRecord,
lngInstanceId, EndTime:=dtmEndTime,
ElapsedTime:=lElapsed)

End Sub

Private Sub cExecStep72_ProcessStart(cStepRecord As
cStep, _
        strCommand As String, dtmStartTime As
Currency, lngInstanceId As Long)

    Call TimeUpdateForProcess(cStepRecord,
lngInstanceId, StartTime:=dtmStartTime,
Command:=strCommand)

End Sub

Private Sub cExecStep72_StepComplete(cStepRecord As
cStep, _
        dtmEndTime As Currency, InstanceId As Long,
Status As InstanceStatus)

    Call StepTerminated(cStepRecord, dtmEndTime,
cExecStep72.Index, InstanceId, Status)

End Sub

Private Sub cExecStep72_StepStart(cStepRecord As
cStep, _
        dtmStartTime As Currency, InstanceId As Long)

    Call TimeStartUpdateForStep(cStepRecord,
InstanceId, dtmStartTime)

End Sub

Private Sub cExecStep73_ProcessComplete(cStepRecord
As cStep, _
        dtmEndTime As Currency, lngInstanceId As
Long, lElapsed As Long)

    Call TimeUpdateForProcess(cStepRecord,
lngInstanceId, EndTime:=dtmEndTime,
ElapsedTime:=lElapsed)

End Sub

Private Sub cExecStep73_ProcessStart(cStepRecord As
cStep, _
        strCommand As String, dtmStartTime As
Currency, lngInstanceId As Long)

    Call TimeUpdateForProcess(cStepRecord,
lngInstanceId, StartTime:=dtmStartTime,
Command:=strCommand)

End Sub

Private Sub cExecStep73_StepComplete(cStepRecord As
cStep, _
        dtmEndTime As Currency, InstanceId As Long,
Status As InstanceStatus)

    Call StepTerminated(cStepRecord, dtmEndTime,
cExecStep73.Index, InstanceId, Status)

End Sub

Private Sub cExecStep73_StepStart(cStepRecord As
cStep, _
        dtmStartTime As Currency, InstanceId As Long)

    Call TimeStartUpdateForStep(cStepRecord,
InstanceId, dtmStartTime)

End Sub

Private Sub cExecStep74_ProcessComplete(cStepRecord
As cStep, _
        dtmEndTime As Currency, lngInstanceId As
Long, lElapsed As Long)

    Call TimeUpdateForProcess(cStepRecord,
lngInstanceId, EndTime:=dtmEndTime,
ElapsedTime:=lElapsed)

End Sub

Private Sub cExecStep74_ProcessStart(cStepRecord As
cStep, _
        strCommand As String, dtmStartTime As
Currency, lngInstanceId As Long)

    Call TimeUpdateForProcess(cStepRecord,
lngInstanceId, StartTime:=dtmStartTime,
Command:=strCommand)

End Sub

Private Sub cExecStep74_StepComplete(cStepRecord As
cStep, _
        dtmEndTime As Currency, InstanceId As Long,
Status As InstanceStatus)

    Call StepTerminated(cStepRecord, dtmEndTime,
cExecStep74.Index, InstanceId, Status)

End Sub

Private Sub cExecStep74_StepStart(cStepRecord As
cStep, _
        dtmStartTime As Currency, InstanceId As Long)

    Call TimeStartUpdateForStep(cStepRecord,
InstanceId, dtmStartTime)
```


© 2006 Hewlett-Packard Company. All rights reserved.

```
End Sub

Private Sub cExecStep75_ProcessComplete(cStepRecord
As cStep, _
        dtmEndTime As Currency, lngInstanceId As
Long, lElapsed As Long)

    Call TimeUpdateForProcess(cStepRecord,
lngInstanceId, EndTime:=dtmEndTime,
ElapsedTime:=lElapsed)

End Sub

Private Sub cExecStep75_ProcessStart(cStepRecord As
cStep, _
        strCommand As String, dtmStartTime As
Currency, lngInstanceId As Long)

    Call TimeUpdateForProcess(cStepRecord,
lngInstanceId, StartTime:=dtmStartTime,
Command:=strCommand)

End Sub

Private Sub cExecStep75_StepComplete(cStepRecord As
cStep, _
        dtmEndTime As Currency, InstanceId As Long,
Status As InstanceStatus)

    Call StepTerminated(cStepRecord, dtmEndTime,
cExecStep75.Index, InstanceId, Status)

End Sub

Private Sub cExecStep75_StepStart(cStepRecord As
cStep, _
        dtmStartTime As Currency, InstanceId As Long)

    Call TimeStartUpdateForStep(cStepRecord,
InstanceId, dtmStartTime)

End Sub

Private Sub cExecStep76_ProcessComplete(cStepRecord
As cStep, _
        dtmEndTime As Currency, lngInstanceId As
Long, lElapsed As Long)

    Call TimeUpdateForProcess(cStepRecord,
lngInstanceId, EndTime:=dtmEndTime,
ElapsedTime:=lElapsed)

End Sub

Private Sub cExecStep76_ProcessStart(cStepRecord As
cStep, _
        strCommand As String, dtmStartTime As
Currency, lngInstanceId As Long)

    Call TimeUpdateForProcess(cStepRecord,
lngInstanceId, StartTime:=dtmStartTime,
Command:=strCommand)

End Sub

Private Sub cExecStep76_StepComplete(cStepRecord As
cStep, _
        dtmEndTime As Currency, InstanceId As Long,
Status As InstanceStatus)

    Call StepTerminated(cStepRecord, dtmEndTime,
cExecStep76.Index, InstanceId, Status)

End Sub

Private Sub cExecStep76_StepStart(cStepRecord As
cStep, _
        dtmStartTime As Currency, InstanceId As Long)

    Call TimeStartUpdateForStep(cStepRecord,
InstanceId, dtmStartTime)

End Sub

Private Sub cExecStep77_ProcessComplete(cStepRecord
As cStep, _
        dtmEndTime As Currency, lngInstanceId As
Long, lElapsed As Long)

    Call TimeUpdateForProcess(cStepRecord,
lngInstanceId, EndTime:=dtmEndTime,
ElapsedTime:=lElapsed)

End Sub

Private Sub cExecStep77_ProcessStart(cStepRecord As
cStep, _
        strCommand As String, dtmStartTime As
Currency, lngInstanceId As Long)

    Call TimeUpdateForProcess(cStepRecord,
lngInstanceId, StartTime:=dtmStartTime,
Command:=strCommand)

End Sub

Private Sub cExecStep77_StepComplete(cStepRecord As
cStep, _
        dtmEndTime As Currency, InstanceId As Long,
Status As InstanceStatus)

    Call StepTerminated(cStepRecord, dtmEndTime,
cExecStep77.Index, InstanceId, Status)

End Sub

Private Sub cExecStep77_StepStart(cStepRecord As
cStep, _
        dtmStartTime As Currency, InstanceId As Long)

    Call TimeStartUpdateForStep(cStepRecord,
InstanceId, dtmStartTime)

End Sub

Private Sub cExecStep78_ProcessComplete(cStepRecord
As cStep, _
        dtmEndTime As Currency, lngInstanceId As
Long, lElapsed As Long)

    Call TimeUpdateForProcess(cStepRecord,
lngInstanceId, EndTime:=dtmEndTime,
ElapsedTime:=lElapsed)

End Sub

Private Sub cExecStep78_ProcessStart(cStepRecord As
cStep, _
        strCommand As String, dtmStartTime As
Currency, lngInstanceId As Long)

    Call TimeUpdateForProcess(cStepRecord,
lngInstanceId, StartTime:=dtmStartTime,
Command:=strCommand)

End Sub

Private Sub cExecStep78_StepComplete(cStepRecord As
cStep, _
        dtmEndTime As Currency, InstanceId As Long,
Status As InstanceStatus)

    Call StepTerminated(cStepRecord, dtmEndTime,
cExecStep78.Index, InstanceId, Status)

End Sub

Private Sub cExecStep78_StepStart(cStepRecord As
cStep, _
        dtmStartTime As Currency, InstanceId As Long)

    Call TimeStartUpdateForStep(cStepRecord,
InstanceId, dtmStartTime)

End Sub

Private Sub cExecStep79_ProcessComplete(cStepRecord
As cStep, _
        dtmEndTime As Currency, lngInstanceId As
Long, lElapsed As Long)

    Call TimeUpdateForProcess(cStepRecord,
lngInstanceId, EndTime:=dtmEndTime,
ElapsedTime:=lElapsed)

End Sub

Private Sub cExecStep79_ProcessStart(cStepRecord As
cStep, _
        strCommand As String, dtmStartTime As
Currency, lngInstanceId As Long)

    Call TimeUpdateForProcess(cStepRecord,
lngInstanceId, StartTime:=dtmStartTime,
Command:=strCommand)

End Sub
```


© 2006 Hewlett-Packard Company. All rights reserved.

```
Private Sub cExecStep79_StepComplete(cStepRecord As
cStep, _
        dtmEndTime As Currency, InstanceId As Long,
Status As InstanceStatus)

    Call StepTerminated(cStepRecord, dtmEndTime,
cExecStep79.Index, InstanceId, Status)

End Sub

Private Sub cExecStep79_StepStart(cStepRecord As
cStep, _
        dtmStartTime As Currency, InstanceId As Long)

    Call TimeStartUpdateForStep(cStepRecord,
InstanceId, dtmStartTime)

End Sub

Private Sub cExecStep80_ProcessComplete(cStepRecord
As cStep, _
        dtmEndTime As Currency, lngInstanceId As
Long, lElapsed As Long)

    Call TimeUpdateForProcess(cStepRecord,
lngInstanceId, EndTime:=dtmEndTime,
ElapsedTime:=lElapsed)

End Sub

Private Sub cExecStep80_ProcessStart(cStepRecord As
cStep, _
        strCommand As String, dtmStartTime As
Currency, lngInstanceId As Long)

    Call TimeUpdateForProcess(cStepRecord,
lngInstanceId, StartTime:=dtmStartTime,
Command:=strCommand)

End Sub

Private Sub cExecStep80_StepComplete(cStepRecord As
cStep, _
        dtmEndTime As Currency, InstanceId As Long,
Status As InstanceStatus)

    Call StepTerminated(cStepRecord, dtmEndTime,
cExecStep80.Index, InstanceId, Status)

End Sub

Private Sub cExecStep80_StepStart(cStepRecord As
cStep, _
        dtmStartTime As Currency, InstanceId As Long)

    Call TimeStartUpdateForStep(cStepRecord,
InstanceId, dtmStartTime)

End Sub

Private Sub cExecStep81_ProcessComplete(cStepRecord
As cStep, _
        dtmEndTime As Currency, lngInstanceId As
Long, lElapsed As Long)

    Call TimeUpdateForProcess(cStepRecord,
lngInstanceId, EndTime:=dtmEndTime,
ElapsedTime:=lElapsed)

End Sub

Private Sub cExecStep81_ProcessStart(cStepRecord As
cStep, _
        strCommand As String, dtmStartTime As
Currency, lngInstanceId As Long)

    Call TimeUpdateForProcess(cStepRecord,
lngInstanceId, StartTime:=dtmStartTime,
Command:=strCommand)

End Sub

Private Sub cExecStep81_StepComplete(cStepRecord As
cStep, _
        dtmEndTime As Currency, InstanceId As Long,
Status As InstanceStatus)

    Call StepTerminated(cStepRecord, dtmEndTime,
cExecStep81.Index, InstanceId, Status)

End Sub

Private Sub cExecStep81_StepStart(cStepRecord As
cStep, _
        dtmStartTime As Currency, InstanceId As Long)

    Call TimeStartUpdateForStep(cStepRecord,
InstanceId, dtmStartTime)

End Sub

Private Sub cExecStep82_ProcessComplete(cStepRecord
As cStep, _
        dtmEndTime As Currency, lngInstanceId As
Long, lElapsed As Long)

    Call TimeUpdateForProcess(cStepRecord,
lngInstanceId, EndTime:=dtmEndTime,
ElapsedTime:=lElapsed)

End Sub

Private Sub cExecStep82_ProcessStart(cStepRecord As
cStep, _
        strCommand As String, dtmStartTime As
Currency, lngInstanceId As Long)

    Call TimeUpdateForProcess(cStepRecord,
lngInstanceId, StartTime:=dtmStartTime,
Command:=strCommand)

End Sub

Private Sub cExecStep82_StepComplete(cStepRecord As
cStep, _
        dtmEndTime As Currency, InstanceId As Long,
Status As InstanceStatus)

    Call StepTerminated(cStepRecord, dtmEndTime,
cExecStep82.Index, InstanceId, Status)

End Sub

Private Sub cExecStep82_StepStart(cStepRecord As
cStep, _
        dtmStartTime As Currency, InstanceId As Long)

    Call TimeStartUpdateForStep(cStepRecord,
InstanceId, dtmStartTime)

End Sub

Private Sub cExecStep83_ProcessComplete(cStepRecord
As cStep, _
        dtmEndTime As Currency, lngInstanceId As
Long, lElapsed As Long)

    Call TimeUpdateForProcess(cStepRecord,
lngInstanceId, EndTime:=dtmEndTime,
ElapsedTime:=lElapsed)

End Sub

Private Sub cExecStep83_ProcessStart(cStepRecord As
cStep, _
        strCommand As String, dtmStartTime As
Currency, lngInstanceId As Long)

    Call TimeUpdateForProcess(cStepRecord,
lngInstanceId, StartTime:=dtmStartTime,
Command:=strCommand)

End Sub

Private Sub cExecStep83_StepComplete(cStepRecord As
cStep, _
        dtmEndTime As Currency, InstanceId As Long,
Status As InstanceStatus)

    Call StepTerminated(cStepRecord, dtmEndTime,
cExecStep83.Index, InstanceId, Status)

End Sub

Private Sub cExecStep83_StepStart(cStepRecord As
cStep, _
        dtmStartTime As Currency, InstanceId As Long)

    Call TimeStartUpdateForStep(cStepRecord,
InstanceId, dtmStartTime)

End Sub

Private Sub cExecStep84_ProcessComplete(cStepRecord
As cStep, _
        dtmEndTime As Currency, lngInstanceId As
Long, lElapsed As Long)
```


© 2006 Hewlett-Packard Company. All rights reserved.

```
    Call TimeUpdateForProcess(cStepRecord,
lngInstanceId, EndTime:=dtmEndTime,
ElapsedTime:=lElapsed)

End Sub

Private Sub cExecStep84_ProcessStart(cStepRecord As
cStep, _
        strCommand As String, dtmStartTime As
Currency, lngInstanceId As Long)

    Call TimeUpdateForProcess(cStepRecord,
lngInstanceId, StartTime:=dtmStartTime,
Command:=strCommand)

End Sub

Private Sub cExecStep84_StepComplete(cStepRecord As
cStep, _
        dtmEndTime As Currency, InstanceId As Long,
Status As InstanceStatus)

    Call StepTerminated(cStepRecord, dtmEndTime,
cExecStep84.Index, InstanceId, Status)

End Sub

Private Sub cExecStep84_StepStart(cStepRecord As
cStep, _
        dtmStartTime As Currency, InstanceId As Long)

    Call TimeStartUpdateForStep(cStepRecord,
InstanceId, dtmStartTime)

End Sub

Private Sub cExecStep85_ProcessComplete(cStepRecord
As cStep, _
        dtmEndTime As Currency, lngInstanceId As
Long, lElapsed As Long)

    Call TimeUpdateForProcess(cStepRecord,
lngInstanceId, EndTime:=dtmEndTime,
ElapsedTime:=lElapsed)

End Sub

Private Sub cExecStep85_ProcessStart(cStepRecord As
cStep, _
        strCommand As String, dtmStartTime As
Currency, lngInstanceId As Long)

    Call TimeUpdateForProcess(cStepRecord,
lngInstanceId, StartTime:=dtmStartTime,
Command:=strCommand)

End Sub

Private Sub cExecStep85_StepComplete(cStepRecord As
cStep, _
        dtmEndTime As Currency, InstanceId As Long,
Status As InstanceStatus)

    Call StepTerminated(cStepRecord, dtmEndTime,
cExecStep85.Index, InstanceId, Status)

End Sub

Private Sub cExecStep85_StepStart(cStepRecord As
cStep, _
        dtmStartTime As Currency, InstanceId As Long)

    Call TimeStartUpdateForStep(cStepRecord,
InstanceId, dtmStartTime)

End Sub

Private Sub cExecStep86_ProcessComplete(cStepRecord
As cStep, _
        dtmEndTime As Currency, lngInstanceId As
Long, lElapsed As Long)

    Call TimeUpdateForProcess(cStepRecord,
lngInstanceId, EndTime:=dtmEndTime,
ElapsedTime:=lElapsed)

End Sub

Private Sub cExecStep86_ProcessStart(cStepRecord As
cStep, _
        strCommand As String, dtmStartTime As
Currency, lngInstanceId As Long)

    Call TimeUpdateForProcess(cStepRecord,
lngInstanceId, StartTime:=dtmStartTime,
Command:=strCommand)

End Sub

Private Sub cExecStep86_StepComplete(cStepRecord As
cStep, _
        dtmEndTime As Currency, InstanceId As Long,
Status As InstanceStatus)

    Call StepTerminated(cStepRecord, dtmEndTime,
cExecStep86.Index, InstanceId, Status)

End Sub

Private Sub cExecStep86_StepStart(cStepRecord As
cStep, _
        dtmStartTime As Currency, InstanceId As Long)

    Call TimeStartUpdateForStep(cStepRecord,
InstanceId, dtmStartTime)

End Sub

Private Sub cExecStep87_ProcessComplete(cStepRecord
As cStep, _
        dtmEndTime As Currency, lngInstanceId As
Long, lElapsed As Long)

    Call TimeUpdateForProcess(cStepRecord,
lngInstanceId, EndTime:=dtmEndTime,
ElapsedTime:=lElapsed)

End Sub

Private Sub cExecStep87_ProcessStart(cStepRecord As
cStep, _
        strCommand As String, dtmStartTime As
Currency, lngInstanceId As Long)

    Call TimeUpdateForProcess(cStepRecord,
lngInstanceId, StartTime:=dtmStartTime,
Command:=strCommand)

End Sub

Private Sub cExecStep87_StepComplete(cStepRecord As
cStep, _
        dtmEndTime As Currency, InstanceId As Long,
Status As InstanceStatus)

    Call StepTerminated(cStepRecord, dtmEndTime,
cExecStep87.Index, InstanceId, Status)

End Sub

Private Sub cExecStep87_StepStart(cStepRecord As
cStep, _
        dtmStartTime As Currency, InstanceId As Long)

    Call TimeStartUpdateForStep(cStepRecord,
InstanceId, dtmStartTime)

End Sub

Private Sub cExecStep88_ProcessComplete(cStepRecord
As cStep, _
        dtmEndTime As Currency, lngInstanceId As
Long, lElapsed As Long)

    Call TimeUpdateForProcess(cStepRecord,
lngInstanceId, EndTime:=dtmEndTime,
ElapsedTime:=lElapsed)

End Sub

Private Sub cExecStep88_ProcessStart(cStepRecord As
cStep, _
        strCommand As String, dtmStartTime As
Currency, lngInstanceId As Long)

    Call TimeUpdateForProcess(cStepRecord,
lngInstanceId, StartTime:=dtmStartTime,
Command:=strCommand)

End Sub

Private Sub cExecStep88_StepComplete(cStepRecord As
cStep, _
        dtmEndTime As Currency, InstanceId As Long,
Status As InstanceStatus)

    Call StepTerminated(cStepRecord, dtmEndTime,
cExecStep88.Index, InstanceId, Status)
```


© 2006 Hewlett-Packard Company. All rights reserved.

```
End Sub

Private Sub cExecStep88_StepStart(cStepRecord As
cStep, _
        dtmStartTime As Currency, InstanceId As Long)

    Call TimeStartUpdateForStep(cStepRecord,
InstanceId, dtmStartTime)

End Sub

Private Sub cExecStep89_ProcessComplete(cStepRecord
As cStep, _
        dtmEndTime As Currency, lngInstanceId As
Long, lElapsed As Long)

    Call TimeUpdateForProcess(cStepRecord,
lngInstanceId, EndTime:=dtmEndTime,
ElapsedTime:=lElapsed)

End Sub

Private Sub cExecStep89_ProcessStart(cStepRecord As
cStep, _
        strCommand As String, dtmStartTime As
Currency, lngInstanceId As Long)

    Call TimeUpdateForProcess(cStepRecord,
lngInstanceId, StartTime:=dtmStartTime,
Command:=strCommand)

End Sub

Private Sub cExecStep89_StepComplete(cStepRecord As
cStep, _
        dtmEndTime As Currency, InstanceId As Long,
Status As InstanceStatus)

    Call StepTerminated(cStepRecord, dtmEndTime,
cExecStep89.Index, InstanceId, Status)

End Sub

Private Sub cExecStep89_StepStart(cStepRecord As
cStep, _
        dtmStartTime As Currency, InstanceId As Long)

    Call TimeStartUpdateForStep(cStepRecord,
InstanceId, dtmStartTime)

End Sub

Private Sub cExecStep90_ProcessComplete(cStepRecord
As cStep, _
        dtmEndTime As Currency, lngInstanceId As
Long, lElapsed As Long)

    Call TimeUpdateForProcess(cStepRecord,
lngInstanceId, EndTime:=dtmEndTime,
ElapsedTime:=lElapsed)

End Sub

Private Sub cExecStep90_ProcessStart(cStepRecord As
cStep, _
        strCommand As String, dtmStartTime As
Currency, lngInstanceId As Long)

    Call TimeUpdateForProcess(cStepRecord,
lngInstanceId, StartTime:=dtmStartTime,
Command:=strCommand)

End Sub

Private Sub cExecStep90_StepComplete(cStepRecord As
cStep, _
        dtmEndTime As Currency, InstanceId As Long,
Status As InstanceStatus)

    Call StepTerminated(cStepRecord, dtmEndTime,
cExecStep90.Index, InstanceId, Status)

End Sub

Private Sub cExecStep90_StepStart(cStepRecord As
cStep, _
        dtmStartTime As Currency, InstanceId As Long)

    Call TimeStartUpdateForStep(cStepRecord,
InstanceId, dtmStartTime)

End Sub

Private Sub cExecStep91_ProcessComplete(cStepRecord
As cStep, _
        dtmEndTime As Currency, lngInstanceId As
Long, lElapsed As Long)

    Call TimeUpdateForProcess(cStepRecord,
lngInstanceId, EndTime:=dtmEndTime,
ElapsedTime:=lElapsed)

End Sub

Private Sub cExecStep91_ProcessStart(cStepRecord As
cStep, _
        strCommand As String, dtmStartTime As
Currency, lngInstanceId As Long)

    Call TimeUpdateForProcess(cStepRecord,
lngInstanceId, StartTime:=dtmStartTime,
Command:=strCommand)

End Sub

Private Sub cExecStep91_StepComplete(cStepRecord As
cStep, _
        dtmEndTime As Currency, InstanceId As Long,
Status As InstanceStatus)

    Call StepTerminated(cStepRecord, dtmEndTime,
cExecStep91.Index, InstanceId, Status)

End Sub

Private Sub cExecStep91_StepStart(cStepRecord As
cStep, _
        dtmStartTime As Currency, InstanceId As Long)

    Call TimeStartUpdateForStep(cStepRecord,
InstanceId, dtmStartTime)

End Sub

Private Sub cExecStep92_ProcessComplete(cStepRecord
As cStep, _
        dtmEndTime As Currency, lngInstanceId As
Long, lElapsed As Long)

    Call TimeUpdateForProcess(cStepRecord,
lngInstanceId, EndTime:=dtmEndTime,
ElapsedTime:=lElapsed)

End Sub

Private Sub cExecStep92_ProcessStart(cStepRecord As
cStep, _
        strCommand As String, dtmStartTime As
Currency, lngInstanceId As Long)

    Call TimeUpdateForProcess(cStepRecord,
lngInstanceId, StartTime:=dtmStartTime,
Command:=strCommand)

End Sub

Private Sub cExecStep92_StepComplete(cStepRecord As
cStep, _
        dtmEndTime As Currency, InstanceId As Long,
Status As InstanceStatus)

    Call StepTerminated(cStepRecord, dtmEndTime,
cExecStep92.Index, InstanceId, Status)

End Sub

Private Sub cExecStep92_StepStart(cStepRecord As
cStep, _
        dtmStartTime As Currency, InstanceId As Long)

    Call TimeStartUpdateForStep(cStepRecord,
InstanceId, dtmStartTime)

End Sub

Private Sub cExecStep93_ProcessComplete(cStepRecord
As cStep, _
        dtmEndTime As Currency, lngInstanceId As
Long, lElapsed As Long)

    Call TimeUpdateForProcess(cStepRecord,
lngInstanceId, EndTime:=dtmEndTime,
ElapsedTime:=lElapsed)

End Sub

Private Sub cExecStep93_ProcessStart(cStepRecord As
cStep, _
```


© 2006 Hewlett-Packard Company. All rights reserved.

```
        strCommand As String, dtmStartTime As
Currency, lngInstanceId As Long)

    Call TimeUpdateForProcess(cStepRecord,
lngInstanceId, StartTime:=dtmStartTime,
Command:=strCommand)

End Sub

Private Sub cExecStep93_StepComplete(cStepRecord As
cStep, _
        dtmEndTime As Currency, InstanceId As Long,
Status As InstanceStatus)

    Call StepTerminated(cStepRecord, dtmEndTime,
cExecStep93.Index, InstanceId, Status)

End Sub

Private Sub cExecStep93_StepStart(cStepRecord As
cStep, _
        dtmStartTime As Currency, InstanceId As Long)

    Call TimeStartUpdateForStep(cStepRecord,
InstanceId, dtmStartTime)

End Sub

Private Sub cExecStep94_ProcessComplete(cStepRecord
As cStep, _
        dtmEndTime As Currency, lngInstanceId As
Long, lElapsed As Long)

    Call TimeUpdateForProcess(cStepRecord,
lngInstanceId, EndTime:=dtmEndTime,
ElapsedTime:=lElapsed)

End Sub

Private Sub cExecStep94_ProcessStart(cStepRecord As
cStep, _
        strCommand As String, dtmStartTime As
Currency, lngInstanceId As Long)

    Call TimeUpdateForProcess(cStepRecord,
lngInstanceId, StartTime:=dtmStartTime,
Command:=strCommand)

End Sub

Private Sub cExecStep94_StepComplete(cStepRecord As
cStep, _
        dtmEndTime As Currency, InstanceId As Long,
Status As InstanceStatus)

    Call StepTerminated(cStepRecord, dtmEndTime,
cExecStep94.Index, InstanceId, Status)

End Sub

Private Sub cExecStep94_StepStart(cStepRecord As
cStep, _
        dtmStartTime As Currency, InstanceId As Long)

    Call TimeStartUpdateForStep(cStepRecord,
InstanceId, dtmStartTime)

End Sub

Private Sub cExecStep95_ProcessComplete(cStepRecord
As cStep, _
        dtmEndTime As Currency, lngInstanceId As
Long, lElapsed As Long)

    Call TimeUpdateForProcess(cStepRecord,
lngInstanceId, EndTime:=dtmEndTime,
ElapsedTime:=lElapsed)

End Sub

Private Sub cExecStep95_ProcessStart(cStepRecord As
cStep, _
        strCommand As String, dtmStartTime As
Currency, lngInstanceId As Long)

    Call TimeUpdateForProcess(cStepRecord,
lngInstanceId, StartTime:=dtmStartTime,
Command:=strCommand)

End Sub

Private Sub cExecStep95_StepComplete(cStepRecord As
cStep, _
        dtmEndTime As Currency, InstanceId As Long,
Status As InstanceStatus)

    Call StepTerminated(cStepRecord, dtmEndTime,
cExecStep95.Index, InstanceId, Status)

End Sub

Private Sub cExecStep95_StepStart(cStepRecord As
cStep, _
        dtmStartTime As Currency, InstanceId As Long)

    Call TimeStartUpdateForStep(cStepRecord,
InstanceId, dtmStartTime)

End Sub

Private Sub cExecStep96_ProcessComplete(cStepRecord
As cStep, _
        dtmEndTime As Currency, lngInstanceId As
Long, lElapsed As Long)

    Call TimeUpdateForProcess(cStepRecord,
lngInstanceId, EndTime:=dtmEndTime,
ElapsedTime:=lElapsed)

End Sub

Private Sub cExecStep96_ProcessStart(cStepRecord As
cStep, _
        strCommand As String, dtmStartTime As
Currency, lngInstanceId As Long)

    Call TimeUpdateForProcess(cStepRecord,
lngInstanceId, StartTime:=dtmStartTime,
Command:=strCommand)

End Sub

Private Sub cExecStep96_StepComplete(cStepRecord As
cStep, _
        dtmEndTime As Currency, InstanceId As Long,
Status As InstanceStatus)

    Call StepTerminated(cStepRecord, dtmEndTime,
cExecStep96.Index, InstanceId, Status)

End Sub

Private Sub cExecStep96_StepStart(cStepRecord As
cStep, _
        dtmStartTime As Currency, InstanceId As Long)

    Call TimeStartUpdateForStep(cStepRecord,
InstanceId, dtmStartTime)

End Sub

Private Sub cExecStep97_ProcessComplete(cStepRecord
As cStep, _
        dtmEndTime As Currency, lngInstanceId As
Long, lElapsed As Long)

    Call TimeUpdateForProcess(cStepRecord,
lngInstanceId, EndTime:=dtmEndTime,
ElapsedTime:=lElapsed)

End Sub

Private Sub cExecStep97_ProcessStart(cStepRecord As
cStep, _
        strCommand As String, dtmStartTime As
Currency, lngInstanceId As Long)

    Call TimeUpdateForProcess(cStepRecord,
lngInstanceId, StartTime:=dtmStartTime,
Command:=strCommand)

End Sub

Private Sub cExecStep97_StepComplete(cStepRecord As
cStep, _
        dtmEndTime As Currency, InstanceId As Long,
Status As InstanceStatus)

    Call StepTerminated(cStepRecord, dtmEndTime,
cExecStep97.Index, InstanceId, Status)

End Sub

Private Sub cExecStep97_StepStart(cStepRecord As
cStep, _
        dtmStartTime As Currency, InstanceId As Long)

    Call TimeStartUpdateForStep(cStepRecord,
InstanceId, dtmStartTime)
```


© 2006 Hewlett-Packard Company. All rights reserved.

```
End Sub

Private Sub cExecStep98_ProcessComplete(cStepRecord
As cStep, _
        dtmEndTime As Currency, lngInstanceId As
Long, lElapsed As Long)

    Call TimeUpdateForProcess(cStepRecord,
lngInstanceId, EndTime:=dtmEndTime,
ElapsedTime:=lElapsed)

End Sub

Private Sub cExecStep98_ProcessStart(cStepRecord As
cStep, _
        strCommand As String, dtmStartTime As
Currency, lngInstanceId As Long)

    Call TimeUpdateForProcess(cStepRecord,
lngInstanceId, StartTime:=dtmStartTime,
Command:=strCommand)

End Sub

Private Sub cExecStep98_StepComplete(cStepRecord As
cStep, _
        dtmEndTime As Currency, InstanceId As Long,
Status As InstanceStatus)

    Call StepTerminated(cStepRecord, dtmEndTime,
cExecStep98.Index, InstanceId, Status)

End Sub

Private Sub cExecStep98_StepStart(cStepRecord As
cStep, _
        dtmStartTime As Currency, InstanceId As Long)

    Call TimeStartUpdateForStep(cStepRecord,
InstanceId, dtmStartTime)

End Sub

Private Sub cExecStep99_ProcessComplete(cStepRecord
As cStep, _
        dtmEndTime As Currency, lngInstanceId As
Long, lElapsed As Long)

    Call TimeUpdateForProcess(cStepRecord,
lngInstanceId, EndTime:=dtmEndTime,
ElapsedTime:=lElapsed)

End Sub

Private Sub cExecStep99_ProcessStart(cStepRecord As
cStep, _
        strCommand As String, dtmStartTime As
Currency, lngInstanceId As Long)

    Call TimeUpdateForProcess(cStepRecord,
lngInstanceId, StartTime:=dtmStartTime,
Command:=strCommand)

End Sub

Private Sub cExecStep99_StepComplete(cStepRecord As
cStep, _
        dtmEndTime As Currency, InstanceId As Long,
Status As InstanceStatus)

    Call StepTerminated(cStepRecord, dtmEndTime,
cExecStep99.Index, InstanceId, Status)

End Sub

Private Sub cExecStep99_StepStart(cStepRecord As
cStep, _
        dtmStartTime As Currency, InstanceId As Long)

    Call TimeStartUpdateForStep(cStepRecord,
InstanceId, dtmStartTime)

End Sub

Private Sub cExecStep2_ProcessComplete(cStepRecord As
cStep, _
        dtmEndTime As Currency, lngInstanceId As
Long, lElapsed As Long)

    Call TimeUpdateForProcess(cStepRecord,
lngInstanceId, EndTime:=dtmEndTime,
ElapsedTime:=lElapsed)

End Sub

Private Sub cExecStep2_ProcessStart(cStepRecord As
cStep, _
        strCommand As String, dtmStartTime As
Currency, lngInstanceId As Long)

    Call TimeUpdateForProcess(cStepRecord,
lngInstanceId, StartTime:=dtmStartTime,
Command:=strCommand)

End Sub


Private Sub cExecStep2_StepComplete(cStepRecord As
cStep, _
        dtmEndTime As Currency, InstanceId As Long,
Status As InstanceStatus)

    Call StepTerminated(cStepRecord, dtmEndTime,
cExecStep2.Index, _
            InstanceId, Status)

End Sub

Private Sub cExecStep2_StepStart(cStepRecord As
cStep, _
        dtmStartTime As Currency, InstanceId As Long)

    Call TimeStartUpdateForStep(cStepRecord,
InstanceId, dtmStartTime)

End Sub


Private Sub cExecStep3_ProcessComplete(cStepRecord As
cStep, _
        dtmEndTime As Currency, lngInstanceId As
Long, lElapsed As Long)

    Call TimeUpdateForProcess(cStepRecord,
lngInstanceId, EndTime:=dtmEndTime,
ElapsedTime:=lElapsed)

End Sub

Private Sub cExecStep3_ProcessStart(cStepRecord As
cStep, _
        strCommand As String, dtmStartTime As
Currency, lngInstanceId As Long)

    Call TimeUpdateForProcess(cStepRecord,
lngInstanceId, StartTime:=dtmStartTime,
Command:=strCommand)

End Sub


Private Sub cExecStep3_StepComplete(cStepRecord As
cStep, _
        dtmEndTime As Currency, InstanceId As Long,
Status As InstanceStatus)

    Call StepTerminated(cStepRecord, dtmEndTime,
cExecStep3.Index, _
            InstanceId, Status)

End Sub

Private Sub cExecStep3_StepStart(cStepRecord As
cStep, _
        dtmStartTime As Currency, InstanceId As Long)

    Call TimeStartUpdateForStep(cStepRecord,
InstanceId, dtmStartTime)

End Sub


Private Sub cExecStep4_ProcessComplete(cStepRecord As
cStep, _
        dtmEndTime As Currency, lngInstanceId As
Long, lElapsed As Long)

    Call TimeUpdateForProcess(cStepRecord,
lngInstanceId, EndTime:=dtmEndTime,
ElapsedTime:=lElapsed)

End Sub

Private Sub cExecStep4_ProcessStart(cStepRecord As
cStep, _
        strCommand As String, dtmStartTime As
Currency, lngInstanceId As Long)
```


© 2006 Hewlett-Packard Company. All rights reserved.

```
    Call TimeUpdateForProcess(cStepRecord,
lngInstanceId, StartTime:=dtmStartTime,
Command:=strCommand)

End Sub

Private Sub cExecStep4_StepComplete(cStepRecord As
cStep, _
        dtmEndTime As Currency, InstanceId As Long,
Status As InstanceStatus)

    Call StepTerminated(cStepRecord, dtmEndTime,
cExecStep4.Index, _
            InstanceId, Status)

End Sub


Private Sub cExecStep4_StepStart(cStepRecord As
cStep, _
        dtmStartTime As Currency, InstanceId As Long)

    Call TimeStartUpdateForStep(cStepRecord,
InstanceId, dtmStartTime)

End Sub

Private Sub cExecStep5_ProcessComplete(cStepRecord As
cStep, _
        dtmEndTime As Currency, lngInstanceId As
Long, lElapsed As Long)

    Call TimeUpdateForProcess(cStepRecord,
lngInstanceId, EndTime:=dtmEndTime,
ElapsedTime:=lElapsed)

End Sub

Private Sub cExecStep5_ProcessStart(cStepRecord As
cStep, _
        strCommand As String, dtmStartTime As
Currency, lngInstanceId As Long)

    Call TimeUpdateForProcess(cStepRecord,
lngInstanceId, StartTime:=dtmStartTime,
Command:=strCommand)

End Sub

Private Sub cExecStep5_StepComplete(cStepRecord As
cStep, _
        dtmEndTime As Currency, InstanceId As Long,
Status As InstanceStatus)

    Call StepTerminated(cStepRecord, dtmEndTime,
cExecStep5.Index, _
            InstanceId, Status)

End Sub

Private Sub cExecStep5_StepStart(cStepRecord As
cStep, _
        dtmStartTime As Currency, InstanceId As Long)

    Call TimeStartUpdateForStep(cStepRecord,
InstanceId, dtmStartTime)

End Sub

Private Sub cExecStep6_ProcessComplete(cStepRecord As
cStep, _
        dtmEndTime As Currency, lngInstanceId As
Long, lElapsed As Long)

    Call TimeUpdateForProcess(cStepRecord,
lngInstanceId, EndTime:=dtmEndTime,
ElapsedTime:=lElapsed)

End Sub

Private Sub cExecStep6_ProcessStart(cStepRecord As
cStep, _
        strCommand As String, dtmStartTime As
Currency, lngInstanceId As Long)

    Call TimeUpdateForProcess(cStepRecord,
lngInstanceId, StartTime:=dtmStartTime,
Command:=strCommand)

End Sub

Private Sub cExecStep6_StepComplete(cStepRecord As
cStep, _
        dtmEndTime As Currency, InstanceId As Long,
Status As InstanceStatus)

    Call StepTerminated(cStepRecord, dtmEndTime,
cExecStep6.Index, _
            InstanceId, Status)

End Sub

Private Sub cExecStep6_StepStart(cStepRecord As
cStep, _
        dtmStartTime As Currency, InstanceId As Long)

    Call TimeStartUpdateForStep(cStepRecord,
InstanceId, dtmStartTime)

End Sub

Private Sub cExecStep7_ProcessComplete(cStepRecord As
cStep, _
        dtmEndTime As Currency, lngInstanceId As
Long, lElapsed As Long)

    Call TimeUpdateForProcess(cStepRecord,
lngInstanceId, EndTime:=dtmEndTime,
ElapsedTime:=lElapsed)

End Sub

Private Sub cExecStep7_ProcessStart(cStepRecord As
cStep, _
        strCommand As String, dtmStartTime As
Currency, lngInstanceId As Long)

    Call TimeUpdateForProcess(cStepRecord,
lngInstanceId, StartTime:=dtmStartTime,
Command:=strCommand)

End Sub

Private Sub cExecStep7_StepComplete(cStepRecord As
cStep, _
        dtmEndTime As Currency, InstanceId As Long,
Status As InstanceStatus)

    Call StepTerminated(cStepRecord, dtmEndTime,
cExecStep7.Index, _
            InstanceId, Status)

End Sub

Private Sub cExecStep7_StepStart(cStepRecord As
cStep, _
        dtmStartTime As Currency, InstanceId As Long)

    Call TimeStartUpdateForStep(cStepRecord,
InstanceId, dtmStartTime)

End Sub

Private Sub cExecStep8_ProcessComplete(cStepRecord As
cStep, _
        dtmEndTime As Currency, lngInstanceId As
Long, lElapsed As Long)

    Call TimeUpdateForProcess(cStepRecord,
lngInstanceId, EndTime:=dtmEndTime,
ElapsedTime:=lElapsed)

End Sub

Private Sub cExecStep8_ProcessStart(cStepRecord As
cStep, _
        strCommand As String, dtmStartTime As
Currency, lngInstanceId As Long)

    Call TimeUpdateForProcess(cStepRecord,
lngInstanceId, StartTime:=dtmStartTime,
Command:=strCommand)

End Sub

Private Sub cExecStep8_StepComplete(cStepRecord As
cStep, _
        dtmEndTime As Currency, InstanceId As Long,
Status As InstanceStatus)

    Call StepTerminated(cStepRecord, dtmEndTime,
cExecStep8.Index, _
            InstanceId, Status)

End Sub

Private Sub cExecStep8_StepStart(cStepRecord As
cStep, _
        dtmStartTime As Currency, InstanceId As Long)
```


© 2006 Hewlett-Packard Company. All rights reserved.

```
    Call TimeStartUpdateForStep(cStepRecord,
InstanceId, dtmStartTime)

End Sub

Private Sub Class_Initialize()

    Dim lngCount As Long
    Dim lngTemp As Long

    On Error GoTo InitializeErr

    Set mcFreeSteps = New cVectorLng
    ' Initialize the array of free objects with all
elements
    ' for now
    For lngCount = 0 To glngNumConcurrentProcesses -
1 Step 1
        mcFreeSteps.Add lngCount
    Next lngCount

    ' Initialize a byte array with the number of free
processes. It will
    ' be used later to determine if any step is
running
    ' Each element in the array can represent 8
steps, 1 for each bit
    ReDim mbarrFree(glngNumConcurrentProcesses \
gintBitsPerByte)

    ' Initialize each element in the byte array w/
all 1's
    ' (upto glngNumConcurrentProcesses)
    For lngCount = LBound(mbarrFree) To
UBound(mbarrFree) Step 1
        lngTemp = IIf( _
                glngNumConcurrentProcesses -
(gintBitsPerByte * lngCount) > gintBitsPerByte, _
                gintBitsPerByte, _
                glngNumConcurrentProcesses -
(gintBitsPerByte * lngCount))

        mbarrFree(lngCount) = (2 ^ lngTemp) - 1
    Next lngCount

    Set mcInstances = New cInstances
    Set mcFailures = New cFailedSteps
    Set mcNavSteps = New cStepTree
    Set mcTermSteps = New cTermSteps

    ' Initialize the Abort flag to False
    mblnAbort = False
    mblnAsk = False

    Exit Sub

InitializeErr:
    ' Log the error code raised by Visual Basic
    Call LogErrors(Errors)
    On Error GoTo 0
    Err.Raise vbObjectError + errInitializeFailed,
mstrModuleName & "Initialize", _
            LoadResString(errInitializeFailed)

End Sub
Private Sub Class_Terminate()

    On Error GoTo Class_TerminateErr

    mcFreeSteps.Clear
    Set mcFreeSteps = Nothing
    ReDim mbarrFree(0)

    mcInstances.Clear
    Set mcInstances = Nothing

    Set mcFailures = Nothing
    Set mcNavSteps = Nothing
    Set mcTermSteps = Nothing

    Exit Sub

Class_TerminateErr:
    Call LogErrors(Errors)

End Sub

Private Sub mcTermSteps_TermStepExists(cStepDetails
As cTermStep)

    Call RunNextStep(cStepDetails.TimeComplete,
cStepDetails.Index, _
            cStepDetails.InstanceId,
cStepDetails.ExecutionStatus)

End Sub
```

cRunItDetails.cls

```
VERSION 1.0 CLASS
BEGIN
  MultiUse = -1  'True
END
Attribute VB_Name = "cRunItDetails"
Attribute VB_GlobalNameSpace = False
Attribute VB_Creatable = True
Attribute VB_PredeclaredId = False
Attribute VB_Exposed = False
'  FILE:        cRunItDetails.cls
'               Microsoft TPC-H Kit Ver. 1.00
'               Copyright Microsoft, 1999
'               All Rights Reserved
'
'
'  PURPOSE:     This module encapsulates the
properties of iterator values
'               that are used by the step being
executed at runtime.
'  Contact:     Reshma Tharamal
(reshmat@microsoft.com)
'

Option Explicit

' Used to indicate the source module name when errors
' are raised by this class
Private Const mstrModuleName As String =
"cRunItDetails."
Private mstrSource As String

Private mstrIteratorName As String
Private mintType As ValueType
Private mlngSequence As Long
Private mlngFrom As Long
Private mlngTo As Long
Private mlngStep As Long
Private mstrValue As String

Public Property Get RangeTo() As Long

    RangeTo = mlngTo

End Property
Public Property Let RangeTo(ByVal vdata As Long)

    mlngTo = vdata

End Property

Public Property Get RangeFrom() As Long

    RangeFrom = mlngFrom

End Property
Public Property Get Sequence() As Long

    Sequence = mlngSequence

End Property

Public Property Get RangeStep() As Long

    RangeStep = mlngStep

End Property
Public Property Let RangeStep(vdata As Long)

    mlngStep = vdata

End Property

Public Property Let RangeFrom(ByVal vdata As Long)

    mlngFrom = vdata

End Property
Public Property Let Sequence(ByVal vdata As Long)

    mlngSequence = vdata

End Property

Public Property Get IteratorType() As ValueType
```


© 2006 Hewlett-Packard Company. All rights reserved.

```
    IteratorType = mintType

End Property
Public Property Let IteratorType(ByVal vdata As
ValueType)

    On Error GoTo TypeErr
    mstrSource = mstrModuleName & "Type"

    ' These constants have been defined in the
enumeration,
    ' Type, which is exposed
    Select Case vdata
        Case gintFrom, gintTo, gintStep, gintValue
            mintType = vdata

        Case Else
            On Error GoTo 0
            Err.Raise vbObjectError + errTypeInvalid,
_
                mstrSource,
LoadResString(errTypeInvalid)
    End Select

    Exit Property

TypeErr:
    LogErrors Errors
    mstrSource = mstrModuleName & "Type"
    On Error GoTo 0
    Err.Raise vbObjectError + errTypeInvalid, _
        mstrSource, LoadResString(errTypeInvalid)

End Property
Private Sub IsList()

    If mintType <> gintValue Then
        On Error GoTo 0
        Err.Raise vbObjectError + errInvalidProperty,
mstrSource, _
                LoadResString(errInvalidProperty)
    End If

End Sub
Private Sub IsRange()

    If mintType = gintValue Then
        On Error GoTo 0
        Err.Raise vbObjectError + errInvalidProperty,
mstrSource, _
                LoadResString(errInvalidProperty)
    End If

End Sub

Public Property Get Value() As String

    Value = mstrValue

End Property
Public Property Let Value(vdata As String)

    mstrValue = vdata

End Property


Public Property Get IteratorName() As String

    IteratorName = mstrIteratorName

End Property
Public Property Let IteratorName(ByVal vdata As
String)

    mstrIteratorName = vdata

End Property
```

cRunItNode.cls

```
VERSION 1.0 CLASS
BEGIN
  MultiUse = -1  'True
END
Attribute VB_Name = "cRunItNode"
Attribute VB_GlobalNameSpace = False
Attribute VB_Creatable = True
Attribute VB_PredeclaredId = False
Attribute VB_Exposed = False
' An iterator class containing the properties that
are used
' by the stpe being executed.
' These iterators might actually come from steps that
are at
' a higher level than the step actually being
executed (viz.
' direct ascendants of the step at any level).

Option Explicit

Public IteratorName As String
Public Value As String
Public StepId As Long
```

cRunOnly.cls

```
VERSION 1.0 CLASS
BEGIN
  MultiUse = -1  'True
END
Attribute VB_Name = "cRunOnly"
Attribute VB_GlobalNameSpace = False
Attribute VB_Creatable = True
Attribute VB_PredeclaredId = False
Attribute VB_Exposed = False
Option Explicit

Public Event Done()
Private WithEvents mcRunWsp As cRunWorkspace
Attribute mcRunWsp.VB_VarHelpID = -1

Public WspName As String
Public WorkspaceId As Long
Public WspLog As String

Public Sub RunWsp()

    On Error GoTo RunWspErr

    Set mcRunWsp = New cRunWorkspace
    Set mcRunWsp.LoadDb = dbsAttTool
    mcRunWsp.WorkspaceId = WorkspaceId
    mcRunWsp.CreateInputFiles = True
    mcRunWsp.RunWorkspace

    Exit Sub

RunWspErr:
    ' Log the VB error code
    LogErrors Errors

End Sub

Private Sub mcRunWsp_RunComplete(dtmEndTime As
Currency)

    MsgBox "Completed executing workspace: " & gstrSQ
& WspName & gstrSQ & " at " & _
            JulianDateToString(dtmEndTime) & "." &
vbCrLf & vbCrLf & _
           "The log file for the run is: " & gstrSQ
& WspLog & gstrSQ & "."
    RaiseEvent Done

End Sub

Private Sub mcRunWsp_RunStart(dtmStartTime As
Currency, strWspLog As String, lRunId As Long)
    WspLog = strWspLog
End Sub
```

cRunStep.cls

```
VERSION 1.0 CLASS
BEGIN
  MultiUse = -1  'True
END
Attribute VB_Name = "cRunStep"
Attribute VB_GlobalNameSpace = False
Attribute VB_Creatable = True
Attribute VB_PredeclaredId = False
Attribute VB_Exposed = False
'  FILE:        cRunStep.cls
'               Microsoft TPC-H Kit Ver. 1.00
'               Copyright Microsoft, 1999
'               All Rights Reserved
'
'
'  PURPOSE:     This class executes the step that is
assigned to the
```


© 2006 Hewlett-Packard Company. All rights reserved.

```
'               ExecuteStep property. It executes the
pre-execution constraints
'               in sequence and then the step itself.
At the end it executes
'               the post-execution constraints. Since
these steps should always
'               be executed in sequence, each step is
only fired on the
'               completion of the previous step.
'  Contact:     Reshma Tharamal
(reshmat@microsoft.com)
'
Option Explicit

' Used to indicate the source module name when errors
' are raised by this class
Private Const mstrModuleName As String = "cRunStep."
Private mstrSource As String

' Local variable(s) to hold property value(s)
Private mcStep As cStep
Private mcGlobals As cArrSteps
Private mcvntWspPreCons As Variant
Private mcvntWspPostCons As Variant
Private mcvntPreCons As Variant
Private mcvntPostCons As Variant
Private mcIterators As cRunColIt
Private mlngInstanceId As Long ' Identifier for the
current instance
Private mlngIndex As Long ' Index value for the
current instance
Private mstrCommand As String ' The command string
Private msRunStepDtl As String ' Step text/file name
that will go into the run_step_details table
Private mblnAbort As Boolean   ' Set to True when the
user aborts the run
Private msOutputFile As String
Private msErrorFile As String
Private miStatus As InstanceStatus
Private mcVBErr As cVBErrorsSM
Public WspParameters As cArrParameters
Public WspConnections As cConnections
Public WspConnDtls As cConnDtls

Private WithEvents mcTermProcess As cTermProcess
Attribute mcTermProcess.VB_VarHelpID = -1
Public RunId As Long
Public CreateInputFiles As Boolean
Private msOutputDir As String

' Object that will execute the step
Private WithEvents mcExecObj As EXECUTEDLLLib.Execute
Attribute mcExecObj.VB_VarHelpID = -1

' Holds the step that is currently being executed
(constraint or
' worker step)
Private mcExecStep As cStep

Private Const msCompareExe As String = "\diff.exe"

Private Enum NextNodeType
    mintWspPreConstraint = 1
    mintPreConstraint
    mintStep
    mintWspPostConstraint
    mintPostConstraint
End Enum

' Public events to notify the calling function of the
' start and end time for each step
Public Event StepStart(cStepRecord As cStep, _
        dtmStartTime As Currency, InstanceId As Long)
Public Event StepComplete(cStepRecord As cStep, _
        dtmEndTime As Currency, InstanceId As Long,
Status As InstanceStatus)
Public Event ProcessStart(cStepRecord As cStep, _
        strCommand As String, dtmStartTime As
Currency, _
        InstanceId As Long)
Public Event ProcessComplete(cStepRecord As cStep, _
        dtmStartTime As Currency, InstanceId As Long,
lElapsed As Long)

Private Function AppendDiffErrors(sDiffFile As
String)
    ' The file containing the errors generated by the
diff utility is passed in
    ' These errors are appended to the error file for
the step

    Dim sTemp As String
    Dim InputFile As Integer

    If Not StringEmpty(sDiffFile) Then

        InputFile = FreeFile
        Open sDiffFile For Input Access Read As
InputFile

        Do While Not EOF(InputFile)         ' Loop
until end of file.
            Line Input #InputFile, sTemp    ' Read
line into variable.
            mcVBErr.LogMessage sTemp
        Loop

        Close InputFile
    End If

End Function

Private Sub CreateStepTextFile()
    ' Creates a file containing the step text being
executed
    On Error GoTo CreateStepTextFileErr

    Dim sInputFile As String

    If mcExecStep.ExecutionMechanism =
gintExecuteShell Then
        sInputFile = GetOutputFile(gsCmdFileSuffix)
    Else
        sInputFile = GetOutputFile(gsSqlFileSuffix)
    End If

    ' Generate a file containing the step text being
executed
    If Not StringEmpty(mcExecStep.StepTextFile) Or
mcExecStep.ExecutionMechanism = gintExecuteShell Then
        FileCopy mstrCommand, sInputFile
    Else
        Call WriteCommandToFile(mstrCommand,
sInputFile)
    End If

    Exit Sub

CreateStepTextFileErr:

    mcVBErr.LogVBErrors

End Sub
Private Function GetOutputFile(strFileExt As String)
As String
    ' This function generates the output file name
for the step currently being executed
    ' The value of the built-in parameter
'DefaultDir' is appended with the run identifier
    ' for the file location
    ' The step label is used for the file name and a
combination of all iterator values
    ' for the step is used to make the output files
unique for each instance
    Dim sFile As String
    Dim sIt As String
    Dim lIt As Long

    On Error GoTo GetOutputFileErr

    sFile =
SubstituteParametersIfPossible(mcExecStep.StepLabel)

    sFile = TranslateStepLabel(sFile)

    If mcExecStep Is mcStep Then
        ' Use iterators that have been defined for
the worker or any of it's managers
        ' to make the error/log file unique for this
instance
        For lIt = mcIterators.Count - 1 To 0 Step -1
            sIt = sIt & gsExtSeparator &
mcIterators(lIt).Value
        Next lIt
    End If
    sIt = sIt & strFileExt

    ' Ensure that the length of the complete path
does not exceed 255 characters
    If Len(msOutputDir) + Len(sFile) + Len(sIt) >
MAX_PATH Then
        sFile = Mid(sFile, 1, MAX_PATH - Len(sIt) -
Len(msOutputDir))
    End If
    GetOutputFile = msOutputDir & sFile & sIt
    Exit Function

GetOutputFileErr:
```


© 2006 Hewlett-Packard Company. All rights reserved.

```
    ' Does not make sense to log error to the error
file yet. Write to the project
    ' log and return the step label as default
    GetOutputFile = mcExecStep.StepLabel &
gsExtSeparator & strFileExt

End Function


Private Sub HandleExecutionError()

    On Error GoTo HandleExecutionError

    ' Log the error code raised by Visual Basic
    miStatus = gintFailed
    mcVBErr.LogVBErrors
    Call mcVBErr.WriteError(errExecuteStepFailed, _
            OptArgs:="Continuation criteria for the
step is: " &
gsContCriteria(mcStep.ContinuationCriteria))

HandleExecutionError:

    ' Logging failed - return

End Sub

Public Property Get Index() As Long

    Index = mlngIndex

End Property
Public Property Let Index(ByVal vdata As Long)

    mlngIndex = vdata

End Property
Private Function InitializeExecStatus() As
InstanceStatus
    Dim sCompareFile As String

    On Error GoTo InitializeExecStatusErr

    InitializeExecStatus = mcExecObj.StepStatus

    If InitializeExecStatus = gintComplete Then
        If Not StringEmpty(mcExecStep.FailureDetails)
Then
            ' Compare output to determine whether the
step failed
            sCompareFile =
GetShortName(SubstituteParameters( _
                    mcExecStep.FailureDetails,
mcExecStep.WorkspaceId, mcIterators, _
                    WspParameters))
            InitializeExecStatus =
IIf(CompareOutput(sCompareFile, msOutputFile),
gintComplete, gintFailed)
        End If
    End If

    Exit Function

InitializeExecStatusErr:
    mcVBErr.LogVBErrors
'    Call LogErrors(Errors)
    InitializeExecStatus = mcExecObj.StepStatus

End Function
Private Function CompareOutput(sCompareFile As
String, sOutputFile As String) As Boolean

    Dim sCmpOutput As String
    Dim sDiffOutput As String

    On Error GoTo CompareOutputErr

    ' Create temporary files to store the file
compare output and
    ' the errors generated by the compare function
    sCmpOutput = CreateTempFile()
    sDiffOutput = CreateTempFile()

    ' Run the compare utility and redirect it's
output and errors
    SyncShell ("cmd /c " & _
            GetShortName(App.Path & msCompareExe) &
gstrBlank & _
            sCompareFile & gstrBlank & sOutputFile &
_
            " > " & sCmpOutput & " 2> " &
sDiffOutput)

    If FileLen(sDiffOutput) > 0 Then
        ' The compare generated errors - append error
msgs to the error file
        Call AppendDiffErrors(sDiffOutput)
        CompareOutput = False
    Else
        CompareOutput = (FileLen(sCmpOutput) = 0)
    End If

    If Not CompareOutput Then
        mcVBErr.WriteError errDiffFailed
    End If

    ' Delete the temporary files used to store the
output of the compare and
    ' the errors generated by the compare
    Kill sDiffOutput
    Kill sCmpOutput

    Exit Function

CompareOutputErr:
    mcVBErr.LogVBErrors
    CompareOutput = False

End Function
Public Property Get InstanceId() As Long

    InstanceId = mlngInstanceId

End Property
Public Property Let InstanceId(ByVal vdata As Long)

    mlngInstanceId = vdata

End Property

Private Function ExecuteConstraint(vntConstraints As
Variant, _
        ByRef intLoopIndex As Integer) As Boolean

    ' Returns True if there is a constraint in the
passed in
    ' array that remains to be executed

    If IsArray(vntConstraints) And Not
IsEmpty(vntConstraints) Then
        ExecuteConstraint = (LBound(vntConstraints)
<= intLoopIndex) And (intLoopIndex <=
UBound(vntConstraints))
    Else
        ExecuteConstraint = False
    End If

End Function
Private Function NextStep() As cStep

    ' Determines which is the next step to be
executed - it could
    ' be either a pre-execution step, the worker step
itself
    ' or a post-execution step

    Dim cConsRec As cConstraint
    Dim cNextStepRec As cStep
    Dim vntStepConstraints As Variant

    ' Static variable to remember exactly where we
are in the
    ' processing
    Static intIndex As Integer
    Static intNextStepType As NextNodeType

    On Error GoTo NextStepErr

    If mblnAbort = True Then
        ' The user has aborted the run - do not run
any more
        ' processes for the step
        Set NextStep = Nothing
        Exit Function
    End If

    If intNextStepType = 0 Then
        ' First time through this function - set the
Index and
        ' node type to initial values
        intNextStepType = mintWspPreConstraint
        intIndex = 0
        RaiseEvent StepStart(mcStep,
Determine64BitTime(), mlngInstanceId)
    End If

    Do
        Select Case intNextStepType
            Case mintWspPreConstraint
```


© 2006 Hewlett-Packard Company. All rights reserved.

```
                vntStepConstraints = mcvntWspPreCons

            Case mintPreConstraint
                vntStepConstraints = mcvntPreCons

            Case mintStep
                ' CONS:
                If mcStep.StepType = gintWorkerStep
Then
                    Set cNextStepRec = mcStep
                End If

            Case mintWspPostConstraint
                vntStepConstraints = mcvntWspPostCons

            Case mintPostConstraint
                vntStepConstraints = mcvntPostCons

        End Select

        If intNextStepType <> mintStep Then
            ' Check if there is a constraint to be
executed
            If ExecuteConstraint(vntStepConstraints,
intIndex) Then
                ' Get the corresponding step record
to be executed
                ' Query the global step record for
the current
                ' constraint
                Set cConsRec =
vntStepConstraints(intIndex)

                Set cNextStepRec =
mcGlobals.QueryStep(cConsRec.GlobalStepId)
                intIndex = intIndex + 1
            Else
                If intNextStepType =
mintPostConstraint Then
                    ' No more stuff to be executed
for the step
                    ' Raise a Done event
                    Set cNextStepRec = Nothing

                    ' Set the next step type to an
invalid value
                    intNextStepType = -1
                Else
                    Call NextType(intNextStepType,
intIndex)
                End If
            End If
        Else
            ' Increment the step type so we look at
the post-
            ' execution steps the next time through
            Call NextType(intNextStepType, intIndex)
        End If

    Loop Until (Not cNextStepRec Is Nothing) Or _
            intNextStepType = -1

    Set NextStep = cNextStepRec

    Exit Function

NextStepErr:
    ' Log the error code raised by Visual Basic
    Call LogErrors(Errors)
    On Error GoTo 0
    mstrSource = mstrModuleName & "NextStep"
    Err.Raise vbObjectError + errNextStepFailed,
mstrSource, _
        LoadResString(errNextStepFailed)

End Function
Public Sub Execute()
    ' This procedure is the method that executes the
step that
    ' is assigned to the ExecuteStep property. It
call a procedure
    ' to determine the next step to be executed.
    ' Then it initializes all the properties of the
cExecuteSM object
    ' and calls it's run method to execute it.
    Dim cConn As cConnection
    Dim cRunConnDtl As cConnDtl

    On Error GoTo ExecuteErr

    ' If this procedure is called after a step has
completed,
    ' we would have to check if we created any
temporary files
    ' while executing that step
    If Not mcExecStep Is Nothing Then
        If Not StringEmpty(mcExecStep.StepTextFile)
Or mcExecStep.ExecutionMechanism = gintExecuteShell
Then
            ' Remove the temporary file that we
created while
            ' running this command
            Kill mstrCommand
        End If

        Call StepCompleted

        ' The VB errors class stores a reference to
the Execute class since it uses
        ' a method of the class to write errors to
the error log. Hence,
        ' release all references to the Execute
object before destroying it.
        Set mcVBErr.ErrorFile = Nothing
        Set mcExecObj = Nothing

        ' Delete empty output and error files
(generated by shell commands)
        ' (Can be done only after cleaning up
cExecObj)
        Call DeleteEmptyOutputFiles
    Else
        ' First time through - initialize the
location of output files
        msOutputDir =
GetDefaultDir(mcStep.WorkspaceId, WspParameters)
        msOutputDir = msOutputDir & gstrFileSeparator
& Trim(Str(RunId)) & gstrFileSeparator
        ' Dummy file since the function expects a
file name
        MakePathValid (msOutputDir & "a.txt")
    End If

    ' Call a procedure to determine the next step to
be executed
    ' - could be a constraint or the step itself
    ' Initialize a module-level variable to the step
being
    ' executed
    Set mcExecStep = NextStep
    If mcExecStep Is Nothing Then
        RaiseEvent StepComplete(mcStep,
Determine64BitTime(), mlngInstanceId, miStatus)
        ' No more stuff to execute
        Exit Sub
    End If

    Dim sStartDir As String

    Set mcExecObj = New EXECUTEDLLLib.Execute

    ' The VB errors class uses the WriteError method
of the Execute class to write
    ' all VB errors to the error file for the step
(this prevents a clash when the
    ' VB errors and Execution errors have to be
written to the same log). Hence, store
    ' a reference to the Execute object in mcVBErr
    msErrorFile = GetOutputFile(gsErrorFileSuffix)
    mcExecObj.ErrorFile = msErrorFile
    Call DeleteFile(msErrorFile,
bCheckIfEmpty:=False)
    Set mcVBErr.ErrorFile = mcExecObj

    If mcExecStep.ExecutionMechanism =
gintExecuteShell Then
        sStartDir =
Trim$(GetShortName(SubstituteParameters( _
                mcExecStep.StartDir,
mcExecStep.WorkspaceId, mcIterators,
WspParameters:=WspParameters)))
        ' Dummy connection object
        Set cConn = New cConnection
        Set cRunConnDtl = New cConnDtl
    Else
        ' Find the connection string value and
substitute parameter values in it
        Set cRunConnDtl =
WspConnDtls.GetConnectionDtl(mcExecStep.WorkspaceId,
mcExecStep.StartDir)
        Set cConn =
WspConnections.GetConnection(mcExecStep.WorkspaceId,
cRunConnDtl.ConnectionString)
        sStartDir =
Trim$(SubstituteParameters(cConn.ConnectionValue, _
                mcExecStep.WorkspaceId, mcIterators,
WspParameters:=WspParameters))
    End If
```


© 2006 Hewlett-Packard Company. All rights reserved.

```
    msOutputFile = GetOutputFile(gsOutputFileSuffix)
    Call DeleteFile(msOutputFile,
bCheckIfEmpty:=False)
    mcExecObj.OutputFile = msOutputFile
'    mcExecObj.LogFile =
GetShortName(SubstituteParameters( _
'            mcExecStep.LogFile,
mcExecStep.WorkspaceId, mcIterators,
WspParameters:=WspParameters))
    If mcExecStep.ExecutionMechanism =
gintExecuteODBC And _
             cRunConnDtl.ConnType = ConnTypeDynamic
Then
        Call
mcExecObj.DoExecute(BuildCommandString(), sStartDir,
mcExecStep.ExecutionMechanism, _
                cConn.NoCountDisplay,
cConn.NoExecute, cConn.ParseQueryOnly,
cConn.QuotedIdentifiers, _
                cConn.AnsiNulls, cConn.ShowQueryPlan,
cConn.ShowStatsTime, cConn.ShowStatsIO, _
                cConn.RowCount, cConn.QueryTimeOut,
gstrEmptyString)
    Else
        Call
mcExecObj.DoExecute(BuildCommandString(), sStartDir,
mcExecStep.ExecutionMechanism, _
                cConn.NoCountDisplay,
cConn.NoExecute, cConn.ParseQueryOnly,
cConn.QuotedIdentifiers, _
                cConn.AnsiNulls, cConn.ShowQueryPlan,
cConn.ShowStatsTime, cConn.ShowStatsIO, _
                cConn.RowCount, cConn.QueryTimeOut,
mcExecStep.StartDir)
    End If

    Exit Sub

ExecuteErr:
    Call HandleExecutionError

    ' We can assume that if we are in this function,
a StepStart event has been triggered already.
    RaiseEvent StepComplete(mcStep,
Determine64BitTime(), mlngInstanceId, miStatus)

End Sub
Private Function BuildCommandString() As String
    ' Process text to be executed - either from the
text
    ' field or read it from a file.
    ' This function will always return the command
text for ODBC commands
    ' and a file name for Shell commands
    Dim sFile As String
    Dim sCommand As String
    Dim sTemp As String

    On Error GoTo BuildCommandStringErr

    If Not StringEmpty(mcExecStep.StepTextFile) Then
        ' Substitute parameter values and environment
variables
        ' in the filename
        msRunStepDtl =
SubstituteParameters(mcExecStep.StepTextFile, _
                mcExecStep.WorkspaceId, mcIterators,
WspParameters:=WspParameters)

        sFile = GetShortName(msRunStepDtl)

        mstrCommand =
SubstituteParametersInText(sFile,
mcExecStep.WorkspaceId)

        If mcExecStep.ExecutionMechanism =
gintExecuteODBC Then
            ' Read the contents of the file and pass
it to ODBC
            BuildCommandString =
ReadCommandFromFile(mstrCommand)
        Else
            BuildCommandString = mstrCommand
        End If
    Else
        ' Substitute parameter values and environment
variables
        ' in the step text
        msRunStepDtl =
SubstituteParameters(mcExecStep.StepText, _
                mcExecStep.WorkspaceId, mcIterators,
WspParameters:=WspParameters)
        mstrCommand = msRunStepDtl

        If mcExecStep.ExecutionMechanism =
gintExecuteShell Then
            ' Write the command to a temp file
(enables us to execute multiple
            ' commands via the command interpreter)
            mstrCommand =
WriteCommandToFile(msRunStepDtl)
            BuildCommandString = mstrCommand
        Else
            BuildCommandString =
SQLFixup(msRunStepDtl)
        End If
    End If

    If CreateInputFiles Then
        Call CreateStepTextFile
    End If

    Exit Function

BuildCommandStringErr:
    ' Log the error code raised by the Execute
procedure
'    Call LogErrors(Errors)
    mcVBErr.LogVBErrors

    On Error GoTo 0
    mstrSource = mstrModuleName & "Execute"
    Err.Raise vbObjectError + errExecuteStepFailed,
mstrSource, _
        LoadResString(errExecuteStepFailed) &
mstrCommand

End Function
Public Sub Abort()

    On Error GoTo AbortErr

    ' Setting the Abort flag to True will ensure that
we
    ' don't execute any more processes for this step
    mblnAbort = True

    If Not mcExecObj Is Nothing Then
        mcExecObj.Abort
    Else
        ' We are not in the middle of execution yet
    End If

    Exit Sub

AbortErr:
    Call LogErrors(Errors)
    On Error GoTo 0
    Err.Raise vbObjectError + errProgramError, _
        mstrModuleName & "Abort", _
        LoadResString(errProgramError)

End Sub
Private Sub NextType(ByRef StepType As NextNodeType,
_
        ByRef Position As Integer)

    StepType = StepType + 1
    Position = 0

End Sub
Private Sub StepCompleted()

    On Error GoTo StepCompletedErr

    If Not mcExecStep Is Nothing Then
        If mcExecStep Is mcStep Then
            miStatus = InitializeExecStatus
            If miStatus = gintFailed Then
                ' Create input files if the step
failed execution and one hasn't been created already
                If Not CreateInputFiles Then
CreateStepTextFile
                Call
mcVBErr.WriteError(errExecuteStepFailed, _
                        OptArgs:="Continuation
criteria for the step is: " &
gsContCriteria(mcStep.ContinuationCriteria))
            End If
        End If
    End If

    Exit Sub

StepCompletedErr:
    ' Log the error code raised by Visual Basic
    miStatus = gintFailed
    mcVBErr.LogVBErrors
    Call mcVBErr.WriteError(errExecuteStepFailed, _
```


© 2006 Hewlett-Packard Company. All rights reserved.

```
            OptArgs:="Continuation criteria for the
step is: " &
gsContCriteria(mcStep.ContinuationCriteria))

End Sub
Private Sub DeleteEmptyOutputFiles()

    On Error GoTo DeleteEmptyOutputFilesErr

    ' Delete empty output and error files
    If Not mcExecStep Is Nothing Then
        Call DeleteFile(msErrorFile,
bCheckIfEmpty:=True)
        Call DeleteFile(msOutputFile,
bCheckIfEmpty:=True)
    End If

    Exit Sub

DeleteEmptyOutputFilesErr:
    ' Not a critical error - continue

End Sub
Private Function ReadCommandFromFile(strFileName As
String) As String

    ' Returns the contents of the passed in file

    Dim sCommand As String
    Dim sTemp As String
    Dim InputFile As Integer

    On Error GoTo ReadCommandFromFileErr

    If Not StringEmpty(strFileName) Then

        InputFile = FreeFile
        Open strFileName For Input Access Read As
InputFile

        Line Input #InputFile, sCommand ' Read line
into variable.

        Do While Not EOF(InputFile) ' Loop until end
of file.
            Line Input #InputFile, sTemp ' Read line
into variable.
            sCommand = sCommand & vbCrLf & sTemp
        Loop

        Close InputFile
    End If

    ReadCommandFromFile = sCommand

    Exit Function

ReadCommandFromFileErr:

    ' Log the error code raised by Visual Basic
    Call LogErrors(Errors)
    mstrSource = mstrModuleName &
"ReadCommandFromFile"
    On Error GoTo 0
    Err.Raise vbObjectError + errSubValuesFailed, _
            gstrSource, _
            LoadResString(errSubValuesFailed)

End Function
Private Function
SubstituteParametersIfPossible(strLabel As String)

    On Error GoTo SubstituteParametersIfPossibleErr

    SubstituteParametersIfPossible =
SubstituteParameters(strLabel, _
            mcExecStep.WorkspaceId, mcIterators,
WspParameters:=WspParameters)
    Exit Function

SubstituteParametersIfPossibleErr:
    SubstituteParametersIfPossible = strLabel

End Function
Private Function
SubstituteParametersInText(strFileName As String, _
        lngWorkspace As Long) As String

    ' Reads each line in the passed in file,
substitutes parameter
    ' values in the line and writes out the modified
line to a
    ' temporary file that we create. The temporary
file will be
    ' removed once the step completes execution.
    ' Returns the name of the newly created temporary
file.

    Dim strTempFile As String
    Dim strTemp As String
    Dim strOutput As String
    Dim InputFile As Integer
    Dim OutputFile As Integer

    On Error GoTo SubstituteParametersInTextErr

    strTempFile = CreateTempFile()

    If Not StringEmpty(strFileName) Then

        InputFile = FreeFile
        Open strFileName For Input Access Read As
InputFile

        OutputFile = FreeFile
        Open strTempFile For Output Access Write As
OutputFile

        Do While Not EOF(InputFile) ' Loop until end
of file.
            Line Input #InputFile, strTemp ' Read
line into variable.
            strOutput = SubstituteParameters(strTemp,
lngWorkspace, mcIterators,
WspParameters:=WspParameters)
            If mcExecStep.ExecutionMechanism =
gintExecuteODBC Then strOutput = SQLFixup(strOutput)

            Print #OutputFile, strOutput
            BugMessage strOutput
        Loop

    End If

    Close InputFile
    Close OutputFile

    SubstituteParametersInText = strTempFile

    Exit Function

SubstituteParametersInTextErr:

    ' Log the error code raised by Visual Basic
'    Call LogErrors(Errors)
    mcVBErr.LogVBErrors
    mstrSource = mstrModuleName &
"SubstituteParametersInText"
    On Error GoTo 0
    Err.Raise vbObjectError + errSubValuesFailed, _
            gstrSource, _
            LoadResString(errSubValuesFailed)

End Function

Private Function WriteCommandToFile(sCommand As
String, Optional sFile As String = gstrEmptyString)
As String

    ' Writes the command text to a temporary file
    ' Returns the name of the temporary file

    Dim OutputFile As Integer

    On Error GoTo WriteCommandToFileErr

    If StringEmpty(sFile) Then
        sFile = CreateTempFile()
    End If

    OutputFile = FreeFile
    Open sFile For Output Access Write As OutputFile

    Print #OutputFile, sCommand

    Close OutputFile

    WriteCommandToFile = sFile

    Exit Function

WriteCommandToFileErr:

    ' Log the error code raised by Visual Basic
    Call LogErrors(Errors)
    mstrSource = mstrModuleName &
"WriteCommandToFile"
    On Error GoTo 0
```


© 2006 Hewlett-Packard Company. All rights reserved.

```
    Err.Raise vbObjectError + errSubValuesFailed, _
            gstrSource, _
            LoadResString(errSubValuesFailed)

End Function


Public Property Get WspPreCons() As Variant
    WspPreCons = mcvntWspPreCons
End Property
Public Property Let WspPreCons(ByVal vdata As
Variant)
    mcvntWspPreCons = vdata
End Property

Public Property Get WspPostCons() As Variant
    WspPostCons = mcvntWspPostCons
End Property
Public Property Let WspPostCons(ByVal vdata As
Variant)
    mcvntWspPostCons = vdata
End Property

Public Property Get PreCons() As Variant
    PreCons = mcvntPreCons
End Property
Public Property Let PreCons(ByVal vdata As Variant)
    mcvntPreCons = vdata
End Property

Public Property Get PostCons() As Variant
    PostCons = mcvntPostCons
End Property
Public Property Let PostCons(ByVal vdata As Variant)
    mcvntPostCons = vdata
End Property

Public Property Set Globals(cRunSteps As cArrSteps)

    Set mcGlobals = cRunSteps

End Property
Public Property Set ExecuteStep(cRunStep As cStep)

    Set mcStep = cRunStep

End Property
Public Property Get Globals() As cArrSteps

    Set Globals = mcGlobals

End Property
Public Property Get ExecuteStep() As cStep

    Set ExecuteStep = mcStep

End Property
Public Property Set Iterators(vdata As cRunColIt)

    Set mcIterators = vdata

End Property
Private Sub Class_Initialize()

    ' Initialize the Abort flag to False
    mblnAbort = False
    Set mcVBErr = New cVBErrorsSM
    Set mcTermProcess = New cTermProcess

End Sub

Private Sub Class_Terminate()

    On Error GoTo Class_TerminateErr

    Set mcExecObj = Nothing
    Set mcVBErr = Nothing
    Set mcTermProcess = Nothing

    Exit Sub

Class_TerminateErr:
    Call LogErrors(Errors)

End Sub

Private Sub mcExecObj_Start(ByVal StartTime As
Currency)
    ' Raise an event indicating that the step has
begun execution
    RaiseEvent ProcessStart(mcExecStep, msRunStepDtl,
StartTime, mlngInstanceId)
End Sub

Private Sub mcExecObj_Complete(ByVal EndTime As
Currency, ByVal Elapsed As Long)

    On Error GoTo mcExecObj_CompleteErr

    Debug.Print Elapsed
    RaiseEvent ProcessComplete(mcExecStep, EndTime,
mlngInstanceId, Elapsed)
    mcTermProcess.ProcessTerminated

    Exit Sub

mcExecObj_CompleteErr:
    Call LogErrors(Errors)

End Sub

Private Sub mcTermProcess_TermProcessExists()

    On Error GoTo TermProcessExistsErr

    ' Call a procedure to execute the next step, if
any
    Call Execute

    Exit Sub

TermProcessExistsErr:
    ' Log the error code raised by the Execute
procedure
    Call LogErrors(Errors)

End Sub
```

cRunWorkspace.cls

```
VERSION 1.0 CLASS
BEGIN
  MultiUse = -1  'True
END
Attribute VB_Name = "cRunWorkspace"
Attribute VB_GlobalNameSpace = False
Attribute VB_Creatable = True
Attribute VB_PredeclaredId = False
Attribute VB_Exposed = False
'  FILE:        cRunWorkspace.cls
'               Microsoft TPC-H Kit Ver. 1.00
'               Copyright Microsoft, 1999
'               All Rights Reserved
'
'
'  PURPOSE:     This class loads all the information
necessary to
'               execute a workspace and calls
cRunInst to execute the workspace.
'               It also propagates Step start and
complete and
'               Run start and complete events.
'  Contact:     Reshma Tharamal
(reshmat@microsoft.com)
'
Option Explicit

' Used to indicate the source module name when errors
' are raised by this module
Private Const mstrModuleName As String =
"cRunWorkspace."
Private mstrSource As String

Private mcRunSteps As cArrSteps
Private mcRunParams As cArrParameters
Private mcRunConstraints As cArrConstraints
Private mcRunConnections As cConnections
Private mcRunConnDtls As cConnDtls
Private mcvntWspPreCons As Variant
Private mcvntWspPostCons As Variant
Private mdbsLoadDb As Database
Private mlngRunId As Long
Private mlngWorkspaceId As Long
Private mField As cStringSM
Public CreateInputFiles As Boolean

Private WithEvents mcRun As cRunInst
Attribute mcRun.VB_VarHelpID = -1

Public Event RunStart(dtmStartTime As Currency,
strWspLog As String, lRunId As Long)
Public Event RunComplete(dtmEndTime As Currency)
Public Event StepStart(cStepRecord As cStep,
dtmStartTime As Currency, lngInstanceId As Long, _
        sPath As String, sIts As String)
```


© 2006 Hewlett-Packard Company. All rights reserved.

```
Public Event StepComplete(cStepRecord As cStep,
dtmEndTime As Currency, lngInstanceId As Long)
Public Event ProcessStart(cStepRecord As cStep,
strCommand As String, _
        dtmStartTime As Currency, lngInstanceId As
Long)
Public Event ProcessComplete(cStepRecord As cStep,
dtmEndTime As Currency, lngInstanceId As Long)
Public Function InstancesForStep(lngStepId As Long,
iStatus As InstanceStatus) As cInstances
    ' Returns an array of all the instances for a
step

    If mcRun Is Nothing Then
        Set InstancesForStep = Nothing
    Else
        Set InstancesForStep =
mcRun.InstancesForStep(lngStepId, iStatus)
    End If

End Function
Private Sub InsertRunDetail(cStepRecord As cStep, _
        strCommand As String, dtmStartTime As
Currency, _
        lngInstanceId As Long, lParentInstanceId As
Long, sItValue As String)
    ' Inserts a new run detail record into the
database

    Dim strInsert As String
    Dim qy As QueryDef

    On Error GoTo InsertRunDetailErr
    mstrSource = mstrModuleName & "InsertRunDetail"

    strInsert = "insert into run_step_details " & _
            "( run_id, step_id, version_no,
instance_id, parent_instance_id, " & _
            " command, start_time, iterator_value ) "
& _
            " values ( "

#If USE_JET Then

    strInsert = strInsert & " [r_id], [s_id],
[ver_no], [i_id], [p_i_id], " & _
            " [com], [s_date], [it_val] )"

    Set qy = mdbsLoadDb.CreateQueryDef( _
            gstrEmptyString, strInsert)

    ' Call a procedure to assign the Querydef
parameters
    Call AssignParameters(qy,
StartTime:=dtmStartTime, _
            StepId:=cStepRecord.StepId, _
            Version:=cStepRecord.VersionNo, _
            InstanceId:=lngInstanceId, _
            Command:=strCommand)

    qy.Execute dbFailOnError
    qy.Close

#Else

    strInsert = strInsert & Str(mlngRunId) _
        & ", " & Str(cStepRecord.StepId) _
        & ", " &
mField.MakeStringFieldValid(cStepRecord.VersionNo) _
        & ", " & Str(lngInstanceId) _
        & ", " & Str(lParentInstanceId) _
        & ", " &
mField.MakeStringFieldValid(strCommand) _
        & ", " & Str(dtmStartTime) _
        & ", " &
mField.MakeStringFieldValid(sItValue)

    strInsert = strInsert & " ) "

    mdbsLoadDb.Execute strInsert, dbFailOnError

#End If

    Exit Sub

InsertRunDetailErr:
    LogErrors Errors
    mstrSource = mstrModuleName & "InsertRunDetail"
    On Error GoTo 0
    Err.Raise vbObjectError + errUpdateRunDataFailed,
_
            mstrSource, _
            LoadResString(errUpdateRunDataFailed)

End Sub
Private Sub UpdateRunDetail(cStepRecord As cStep, _
        dtmEndTime As Currency, lngInstanceId As
Long, lElapsed As Long)
    ' Updates the run detail record in the database

    Dim strUpdate As String
    Dim qy As QueryDef

    On Error GoTo UpdateRunDetailErr

    strUpdate = "update run_step_details " & _
            " set end_time = [e_date], elapsed_time =
[elapsed] " & _
            " where run_id = [r_id] " & _
            " and step_id = [s_id] " & _
            " and version_no = [ver_no] " & _
            " and instance_id = [i_id] "

    Set qy = mdbsLoadDb.CreateQueryDef( _
            gstrEmptyString, strUpdate)

    ' Call a procedure to assign the Querydef
parameters
    Call AssignParameters(qy, EndTime:=dtmEndTime, _
            StepId:=cStepRecord.StepId, _
            Version:=cStepRecord.VersionNo, _
            InstanceId:=lngInstanceId,
Elapsed:=lElapsed)

    qy.Execute dbFailOnError
    qy.Close

    Exit Sub

UpdateRunDetailErr:
    LogErrors Errors
    mstrSource = mstrModuleName & "UpdateRunDetail"
    On Error GoTo 0
    Err.Raise vbObjectError + errUpdateRunDataFailed,
_
            mstrSource, _
            LoadResString(errUpdateRunDataFailed)

End Sub
Private Function InsertRunHeader(dtmStartTime As
Currency) As Long
    ' Inserts a new run header record into the
database
    ' and returns the id for the run

    Dim strInsert As String
    Dim qy As QueryDef

    On Error GoTo InsertRunHeaderErr

    strInsert = "insert into run_header " & _
        "( run_id, workspace_id, start_time ) " & _
        " values ( " & _
        " [r_id], [w_id], [s_date] )"

    Set qy = mdbsLoadDb.CreateQueryDef( _
            gstrEmptyString, strInsert)

    ' Call a procedure to execute the Querydef object
    Call AssignParameters(qy,
StartTime:=dtmStartTime)

    qy.Execute dbFailOnError
    qy.Close

    InsertRunHeader = mlngRunId
    Exit Function

InsertRunHeaderErr:
    LogErrors Errors
    mstrSource = mstrModuleName & "InsertRunHeader"
    On Error GoTo 0
    Err.Raise vbObjectError + errUpdateRunDataFailed,
_
            mstrSource, _
            LoadResString(errUpdateRunDataFailed)

End Function
Private Sub InsertRunParameters(dtmStartTime As
Currency)
    ' Inserts a new run header record into the
database
    ' and returns the id for the run

    Dim strInsert As String
    Dim qy As QueryDef
    Dim cParamRec As cParameter
    Dim lngIndex As Long
```


© 2006 Hewlett-Packard Company. All rights reserved.

```
    On Error GoTo InsertRunParametersErr

    strInsert = "insert into run_parameters " & _
        "( run_id, parameter_name, parameter_value )
" & _
        " values ( " & _
        " [r_id], [p_name], [p_value] )"

    Set qy = mdbsLoadDb.CreateQueryDef( _
            gstrEmptyString, strInsert)
    qy.Parameters("r_id").Value = mlngRunId

    For lngIndex = 0 To mcRunParams.ParameterCount -
1
        Set cParamRec = mcRunParams(lngIndex)

        qy.Parameters("p_name").Value =
cParamRec.ParameterName
        qy.Parameters("p_value").Value =
cParamRec.ParameterValue
        qy.Execute dbFailOnError

    Next lngIndex

    qy.Close

    Exit Sub

InsertRunParametersErr:
    LogErrors Errors
    mstrSource = mstrModuleName &
"InsertRunParameters"
    On Error GoTo 0
    Err.Raise vbObjectError + errUpdateRunDataFailed,
_
            mstrSource, _
            LoadResString(errUpdateRunDataFailed)

End Sub
Private Sub AssignParameters(qyExec As DAO.QueryDef,
_
        Optional StartTime As Currency = 0, _
        Optional EndTime As Currency = 0, _
        Optional StepId As Long = 0, _
        Optional Version As String = gstrEmptyString,
_
        Optional InstanceId As Long = 0, _
        Optional ParentInstanceId As Long = 0, _
        Optional Command As String = gstrEmptyString,
_
        Optional Elapsed As Long = 0, _
        Optional ItValue As String = gstrEmptyString)
    ' Assigns values to the parameters in the
querydef object

    Dim prmParam As DAO.Parameter

    On Error GoTo AssignParametersErr
    mstrSource = mstrModuleName & "AssignParameters"

    For Each prmParam In qyExec.Parameters
        Select Case prmParam.Name
            Case "[w_id]"
                prmParam.Value = mlngWorkspaceId

            Case "[r_id]"
                prmParam.Value = mlngRunId

            Case "[s_id]"
                BugAssert StepId <> 0
                prmParam.Value = StepId

            Case "[ver_no]"
                BugAssert Not StringEmpty(Version)
                prmParam.Value = Version

            Case "[i_id]"
                BugAssert InstanceId <> 0
                prmParam.Value = InstanceId

            Case "[p_i_id]"
                prmParam.Value = ParentInstanceId

            Case "[com]"
                BugAssert Not StringEmpty(Command)
                prmParam.Value = Command

            Case "[s_date]"
                BugAssert StartTime <> 0
                prmParam.Value = StartTime

            Case "[e_date]"
                BugAssert EndTime <> 0
                prmParam.Value = EndTime

            Case "[elapsed]"
                prmParam.Value = Elapsed

            Case "[it_val]"
                prmParam.Value = ItValue

            Case Else
                ' Write the parameter name that is
faulty
                WriteError errInvalidParameter,
mstrSource, _
                        prmParam.Name
                On Error GoTo 0
                Err.Raise errInvalidParameter,
mstrSource, _

LoadResString(errInvalidParameter)
        End Select
    Next prmParam

    Exit Sub

AssignParametersErr:

    mstrSource = mstrModuleName & "AssignParameters"
    Call LogErrors(Errors)
    On Error GoTo 0
    Err.Raise vbObjectError +
errAssignParametersFailed, _
            mstrSource,
LoadResString(errAssignParametersFailed)

End Sub
Private Sub RunStartProcessing(dtmStartTime As
Currency)

    On Error GoTo RunStartProcessingErr

    ' Insert the run header into the database
    Call InsertRunHeader(dtmStartTime)

    ' Insert the run parameters into the database
    Call InsertRunParameters(dtmStartTime)

    Exit Sub

RunStartProcessingErr:
    ' Log the error code raised by Visual Basic
    Call LogErrors(Errors)
    mstrSource = mstrModuleName &
"RunStartProcessing"
    ShowError errUpdateRunDataFailed
    WriteError errUpdateRunDataFailed, mstrSource

End Sub
Private Sub ProcessStartProcessing(cStepRecord As
cStep, _
        strCommand As String, dtmStartTime As
Currency, lngInstanceId As Long, _
        lParentInstanceId As Long, sItValue As
String)

    On Error GoTo ProcessStartProcessingErr

    ' Insert the run detail into the database
    Call InsertRunDetail(cStepRecord, strCommand,
dtmStartTime, lngInstanceId, _
            lParentInstanceId, sItValue)

    Exit Sub

ProcessStartProcessingErr:
    ' Log the error code raised by Visual Basic
    Call LogErrors(Errors)
    mstrSource = mstrModuleName &
"ProcessStartProcessing"
    ShowError errUpdateRunDataFailed
    WriteError errUpdateRunDataFailed, mstrSource

End Sub
Private Sub StepStartProcessing(cStepRecord As cStep,
dtmStartTime As Currency, _
        lngInstanceId As Long, lParentInstanceId As
Long, sItValue As String)

    On Error GoTo StepStartProcessingErr

    ' Since ProcessStart events won't be triggered
for manager steps
    If cStepRecord.StepType = gintManagerStep Then
        ' Insert the run detail into the database
        Call InsertRunDetail(cStepRecord,
cStepRecord.StepLabel, _
```


© 2006 Hewlett-Packard Company. All rights reserved.

```
                dtmStartTime, lngInstanceId,
lParentInstanceId, sItValue)
    End If

    Exit Sub

StepStartProcessingErr:
    ' Log the error code raised by Visual Basic
    Call LogErrors(Errors)
    mstrSource = mstrModuleName &
"StepStartProcessing"
    ShowError errUpdateRunDataFailed

End Sub
Private Sub ProcessCompleteProcessing(cStepRecord As
cStep, _
        dtmStartTime As Currency, lngInstanceId As
Long, lElapsed As Long)

    On Error GoTo ProcessCompleteProcessingErr

    ' Insert the run detail into the database
    Call UpdateRunDetail(cStepRecord, dtmStartTime,
lngInstanceId, lElapsed)

    Exit Sub

ProcessCompleteProcessingErr:
    ' Log the error code raised by Visual Basic
    Call LogErrors(Errors)
    mstrSource = mstrModuleName &
"ProcessCompleteProcessing"
    ShowError errUpdateRunDataFailed

End Sub
Private Sub StepCompleteProcessing(cStepRecord As
cStep, _
        dtmEndTime As Currency, lngInstanceId As
Long, lElapsed As Long)

    On Error GoTo StepCompleteProcessingErr

    ' Since ProcessComplete events won't be triggered
for manager steps
    If cStepRecord.StepType = gintManagerStep Then
        ' Update the run detail in the database
        Call UpdateRunDetail(cStepRecord, dtmEndTime,
lngInstanceId, lElapsed)
    End If

    Exit Sub

StepCompleteProcessingErr:
    ' Log the error code raised by Visual Basic
    Call LogErrors(Errors)
    ShowError errUpdateRunDataFailed

End Sub
Private Sub RunCompleteProcessing(dtmEndTime As
Currency)

    On Error GoTo RunCompleteProcessingErr

    ' Update the header record with the end time for
the run
    Call UpdateRunHeader(dtmEndTime)

    Exit Sub

RunCompleteProcessingErr:
    ' Log the error code raised by Visual Basic
    Call LogErrors(Errors)
    ShowError errUpdateRunDataFailed

End Sub

Private Sub UpdateRunHeader(ByVal dtmEndTime As
Currency)
    ' Updates the run header record with the end date

    Dim strUpdate As String
    Dim qy As QueryDef

    On Error GoTo UpdateRunHeaderErr

    strUpdate = "update run_header " & _
            " set end_time = [e_date] " & _
            " where run_id = [r_id] "

    Set qy = mdbsLoadDb.CreateQueryDef( _
            gstrEmptyString, strUpdate)

    ' Call a procedure to execute the Querydef object
    Call AssignParameters(qy, EndTime:=dtmEndTime)

    qy.Execute dbFailOnError
    qy.Close

    Exit Sub

UpdateRunHeaderErr:
    LogErrors Errors
    mstrSource = mstrModuleName & "UpdateRunHeader"
    On Error GoTo 0
    Err.Raise vbObjectError + errUpdateRunDataFailed,
_
            mstrSource, _
            LoadResString(errUpdateRunDataFailed)

End Sub

Public Property Let WorkspaceId(ByVal vdata As Long)
    mlngWorkspaceId = vdata
End Property
Public Property Get WorkspaceId() As Long
    WorkspaceId = mlngWorkspaceId
End Property
Public Sub RunWorkspace()

    Dim cRunSeq As cSequence

    On Error GoTo RunWorkspaceErr

    ' Call a procedure to load the module-level
structures
    ' with all the step and parameter data for the
run
    If LoadRunData = False Then
        ' Error handled by the function already
        Exit Sub
    End If

    ' Retrieve the next run identifier using the
sequence class
    Set cRunSeq = New cSequence
    Set cRunSeq.IdDatabase = dbsAttTool
    cRunSeq.IdentifierColumn = "run_id"
    mlngRunId = cRunSeq.Identifier
    Set cRunSeq = Nothing

    Call
mcRunParams.InitBuiltInsForRun(mlngWorkspaceId,
mlngRunId)

    Set mcRun.Constraints = mcRunConstraints
    mcRun.WspPreExecution = mcvntWspPreCons
    mcRun.WspPostExecution = mcvntWspPostCons

    Set mcRun.Steps = mcRunSteps
    Set mcRun.Parameters = mcRunParams
    Set mcRun.RunConnections = mcRunConnections
    Set mcRun.RunConnDtls = mcRunConnDtls

    mcRun.WspId = mlngWorkspaceId
    mcRun.RootKey = LabelStep(mlngWorkspaceId)
    mcRun.RunId = mlngRunId
    mcRun.CreateInputFiles = CreateInputFiles

    mcRun.Run

    Exit Sub

RunWorkspaceErr:
    ' Log the error code raised by Visual Basic
    Call LogErrors(Errors)

End Sub
Public Property Get LoadDb() As Database

    Set LoadDb = mdbsLoadDb

End Property
Public Property Set LoadDb(vdata As Database)

    Set mdbsLoadDb = vdata

End Property
Private Function LoadRunData() As Boolean

    ' Loads the step, parameter and constraint arrays
    ' with all the data for the workspace. Returns
False
    ' if a failure occurs

    Dim strWorkspaceName As String
    Dim recWspSteps As Recordset
    Dim qySteps As DAO.QueryDef
    Dim recWspParams As Recordset
```


© 2006 Hewlett-Packard Company. All rights reserved.

```
    Dim qyParams As DAO.QueryDef
    Dim recWspConns As Recordset
    Dim qyConns As DAO.QueryDef
    Dim recWspConnDtls As Recordset
    Dim qyConnDtls As DAO.QueryDef

    On Error GoTo LoadRunDataErr

    Set mcRunSteps.StepDB = mdbsLoadDb
    Set mcRunParams.ParamDatabase = mdbsLoadDb
    Set mcRunConstraints.ConstraintDB = mdbsLoadDb
    Set mcRunConnections.ConnDb = mdbsLoadDb
    Set mcRunConnDtls.ConnDb = mdbsLoadDb

    ' Read all the step and parameter data for the
workspace
    Call ReadWorkspaceData(mlngWorkspaceId,
mcRunSteps, _
            mcRunParams, mcRunConstraints,
mcRunConnections, mcRunConnDtls, _
            recWspSteps, qySteps, recWspParams,
qyParams, recWspConns, qyConns, _
            recWspConnDtls, qyConnDtls)

    ' Load all the pre- and post-execution
constraints that
    ' have been defined for the workspace
    mcvntWspPreCons =
mcRunConstraints.ConstraintsForWsp( _
        mlngWorkspaceId, _
        gintPreStep, _
        blnSort:=True, _
        blnGlobalConstraintsOnly:=True)
    mcvntWspPostCons =
mcRunConstraints.ConstraintsForWsp( _
        mlngWorkspaceId, _
        gintPostStep, _
        blnSort:=True, _
        blnGlobalConstraintsOnly:=True)

    On Error Resume Next
    recWspSteps.Close
    qySteps.Close
    recWspParams.Close
    qyParams.Close
    recWspConns.Close
    qyConns.Close

    LoadRunData = True

    Exit Function

LoadRunDataErr:
    ' Log the error code raised by Visual Basic
    Call LogErrors(Errors)
    ShowError errLoadRunDataFailed
    LoadRunData = False

End Function
Public Sub StopRun()

    On Error GoTo StopRunErr

    If mcRun Is Nothing Then
        ' We haven't been the run yet, so do nothing
    Else
        mcRun.StopRun
    End If

    Exit Sub

StopRunErr:
    ' Log the error code raised by Visual Basic
    Call LogErrors(Errors)
    ' Errors would have been displayed by the called
process

End Sub
Public Sub AbortRun()

    On Error GoTo AbortRunErr

    If mcRun Is Nothing Then
        ' We haven't been the run yet, so do nothing
    Else
        mcRun.Abort
    End If

    Exit Sub

AbortRunErr:
    ' Log the error code raised by Visual Basic
    Call LogErrors(Errors)
    ' Errors would have been displayed by the called
process

End Sub

Private Sub Class_Initialize()

    ' Create instances of the step, parameter and
constraint arrays
    Set mcRunSteps = New cArrSteps
    Set mcRunParams = New cArrParameters
    Set mcRunConstraints = New cArrConstraints
    Set mcRunConnections = New cConnections
    Set mcRunConnDtls = New cConnDtls
    Set mcRun = New cRunInst
    Set mField = New cStringSM

End Sub
Private Sub Class_Terminate()

    On Error GoTo UnLoadRunDataErr

    ' Clears the step, parameter and constraint
arrays
    Set mcRunSteps = Nothing
    Set mcRunParams = Nothing
    Set mcRunConstraints = Nothing
    Set mcRunConnections = Nothing
    Set mcRunConnDtls = Nothing

    Set mcRun = Nothing
    Set mdbsLoadDb = Nothing
    Set mField = Nothing

    Exit Sub

UnLoadRunDataErr:
    ' Log the error code raised by Visual Basic
    Call LogErrors(Errors)
    ' Not a critical error - continue
    Resume Next

End Sub

Private Sub mcRun_ProcessComplete(cStepRecord As
cStep, _
        dtmEndTime As Currency, lngInstanceId As
Long, lElapsed As Long)

    RaiseEvent ProcessComplete(cStepRecord,
dtmEndTime, lngInstanceId)
    Call ProcessCompleteProcessing(cStepRecord,
dtmEndTime, lngInstanceId, lElapsed)

End Sub

Private Sub mcRun_ProcessStart(cStepRecord As cStep,
_
        strCommand As String, dtmStartTime As
Currency, lngInstanceId As Long, _
        lParentInstanceId As Long, sItValue As
String)

    RaiseEvent ProcessStart(cStepRecord, strCommand,
dtmStartTime, lngInstanceId)
    Call ProcessStartProcessing(cStepRecord,
strCommand, dtmStartTime, lngInstanceId, _
            lParentInstanceId, sItValue)

End Sub

Private Sub mcRun_RunComplete(dtmEndTime As Currency)

    Debug.Print "Run ended at: " & CStr(dtmEndTime)
    Call RunCompleteProcessing(dtmEndTime)

    RaiseEvent RunComplete(dtmEndTime)

End Sub
Private Sub mcRun_RunStart(dtmStartTime As Currency,
strWspLog As String)

    RaiseEvent RunStart(dtmStartTime, strWspLog,
mlngRunId)
    Debug.Print "Run started at: " &
CStr(dtmStartTime)

    Call RunStartProcessing(dtmStartTime)

End Sub
Private Sub mcRun_StepComplete(cStepRecord As cStep,
_
        dtmEndTime As Currency, lngInstanceId As
Long, lElapsed As Long)
```


© 2006 Hewlett-Packard Company. All rights reserved.

```
    RaiseEvent StepComplete(cStepRecord, dtmEndTime,
lngInstanceId)
'    BugMessage "Step: " & cStepRecord.StepLabel & "
has completed!"

    Call StepCompleteProcessing(cStepRecord,
dtmEndTime, lngInstanceId, lElapsed)

End Sub
Private Sub mcRun_StepStart(cStepRecord As cStep,
dtmStartTime As Currency, _
        lngInstanceId As Long, lParentInstanceId As
Long, sPath As String, sIts As String, sItValue As
String)

    RaiseEvent StepStart(cStepRecord, dtmStartTime,
lngInstanceId, sPath, sIts)
    'bugmessage "Step: " & cStepRecord.StepLabel & "
has started."

    Call StepStartProcessing(cStepRecord,
dtmStartTime, lngInstanceId, lParentInstanceId,
sItValue)

End Sub
```

cSequence.cls

```
VERSION 1.0 CLASS
BEGIN
  MultiUse = -1  'True
END
Attribute VB_Name = "cSequence"
Attribute VB_GlobalNameSpace = False
Attribute VB_Creatable = True
Attribute VB_PredeclaredId = False
Attribute VB_Exposed = False
'  FILE:        cSequence.cls
'               Microsoft TPC-H Kit Ver. 1.00
'               Copyright Microsoft, 1999
'               All Rights Reserved
'
'
'  PURPOSE:     This class uses the att_identifiers
table to generate unique
'               identifiers.
'  Contact:     Reshma Tharamal
(reshmat@microsoft.com)
'
Option Explicit

Private mlngIdentifier As Long
Private mstrIdentifierColumn As String
Private mrecIdentifiers As Recordset
Private mdbsDatabase As Database

Private Const mstrEmptyString = ""

' Used to indicate the source module name when errors
' are raised by this class
Private mstrSource As String
Private Const mstrModuleName As String = "cSequence."

Private Sub CreateIdRecord()
    ' Creates a record with all identifiers having an
initial value of 1

    Dim sSql As String
    Dim pId As DAO.Parameter
    Dim qyId As DAO.QueryDef

    sSql = "insert into att_identifiers (" & _
            " workspace_id, parameter_id, step_id, "
& _
            " constraint_id, run_id, connection_id "
& _
            ", " & FLD_ID_CONN_NAME & _
            " ) values ( " & _
            "[w_id], [p_id], [s_id], [c_id], [r_id],
[conn_id], [conn_dtl_id] )"
    Set qyId =
mdbsDatabase.CreateQueryDef(gstrEmptyString, sSql)
    For Each pId In qyId.Parameters
        pId.Value = glMinId
    Next pId
    qyId.Execute dbFailOnError
    qyId.Close

End Sub
Private Sub CreateIdRecordset()

    Dim strSql As String

    ' Initialize the recordset with all identifiers
    strSql = "select * from att_identifiers"
    Set mrecIdentifiers =
mdbsDatabase.OpenRecordset(strSql, dbOpenForwardOnly)

    If mrecIdentifiers.RecordCount = 0 Then
        CreateIdRecord
        Set mrecIdentifiers =
mdbsDatabase.OpenRecordset(strSql, dbOpenForwardOnly)
    End If

    BugAssert mrecIdentifiers.RecordCount <> 0

End Sub

Public Property Set IdDatabase(vdata As Database)

    Set mdbsDatabase = vdata

End Property

Public Property Let IdentifierColumn(vdata As String)

    Dim intIndex As Integer

    On Error GoTo IdentifierColumnErr

    ' Initialize the return value to an empty string
    mstrIdentifierColumn = mstrEmptyString
    Call CreateIdRecordset

    For intIndex = 0 To mrecIdentifiers.Fields.Count
- 1

        If
LCase(Trim(mrecIdentifiers.Fields(intIndex).Name)) =
_
                LCase(Trim(vdata)) Then

            ' Valid column name
            mstrIdentifierColumn = vdata
            Exit Property
        End If

    Next intIndex

    BugAssert True, "Invalid column name!"

    Exit Property

IdentifierColumnErr:
    LogErrors Errors
    mstrSource = mstrModuleName & "IdentifierColumn"
    On Error GoTo 0
    Err.Raise vbObjectError +
errIdentifierColumnFailed, _
            mstrSource, _
            LoadResString(errIdentifierColumnFailed)

End Property
Public Property Get Identifier() As Long
    Dim strSql As String

    On Error GoTo GetIdentifierErr

    BugAssert mstrIdentifierColumn <> mstrEmptyString

    ' Increment the identifier column by 1
    strSql = "update att_identifiers " & _
        " set " & mstrIdentifierColumn & _
        " = " & mstrIdentifierColumn & " + 1"
    mdbsDatabase.Execute strSql, dbFailOnError

    ' Refresh the recordset with identifier values
    Call CreateIdRecordset

    mlngIdentifier =
mrecIdentifiers.Fields(mstrIdentifierColumn).Value

    Identifier = mlngIdentifier

    Exit Property

GetIdentifierErr:
    LogErrors Errors
    mstrSource = mstrModuleName & "Identifier"
    On Error GoTo 0
    Err.Raise vbObjectError + errGetIdentifierFailed,
_
            mstrSource, _
            LoadResString(errGetIdentifierFailed)

End Property
Private Sub Class_Terminate()
```


© 2006 Hewlett-Packard Company. All rights reserved.

```
    mrecIdentifiers.Close

End Sub
```

cStack.cls

```
VERSION 1.0 CLASS
BEGIN
  MultiUse = -1  'True
END
Attribute VB_Name = "cStack"
Attribute VB_GlobalNameSpace = False
Attribute VB_Creatable = True
Attribute VB_PredeclaredId = False
Attribute VB_Exposed = False
'  FILE:        cStack.cls
'               Microsoft TPC-H Kit Ver. 1.00
'               Copyright Microsoft, 1999
'               All Rights Reserved
'
'
'  PURPOSE:     This class implements a stack of
objects.
'  Contact:     Reshma Tharamal
(reshmat@microsoft.com)
'
Option Explicit

' Used to indicate the source module name when errors
' are raised by this class
Private Const mstrModuleName As String = "cStack."
Private mstrSource As String

Private mcVector As cVector
Private mlngCount As Long
Public Property Get Item(ByVal Position As Long) As
Object
Attribute Item.VB_UserMemId = 0

    Set Item = mcVector(Position)

End Property

Public Sub Push(objToPush As Object)

    mcVector.Add objToPush

End Sub
Public Sub Clear()

    mcVector.Clear

End Sub

Public Function Pop() As Object

    If mcVector.Count > 0 Then
        Set Pop = mcVector.Delete(mcVector.Count - 1)
    Else
        Set Pop = Nothing
    End If

End Function
Public Function Count() As Long

    Count = mcVector.Count

End Function


Private Sub Class_Initialize()

    Set mcVector = New cVector

End Sub


Private Sub Class_Terminate()

    Set mcVector = Nothing

End Sub
```

cStep.cls

```
VERSION 1.0 CLASS
BEGIN
  MultiUse = -1  'True
END
Attribute VB_Name = "cStep"
Attribute VB_GlobalNameSpace = False
Attribute VB_Creatable = True
Attribute VB_PredeclaredId = False
Attribute VB_Exposed = False
Attribute VB_Ext_KEY = "SavedWithClassBuilder" ,"Yes"
Attribute VB_Ext_KEY = "Top_Level" ,"Yes"
'  FILE:        cStep.cls
'               Microsoft TPC-H Kit Ver. 1.00
'               Copyright Microsoft, 1999
'               All Rights Reserved
'
'
'  PURPOSE:     Encapsulates the properties and
methods of a step.
'               Contains functions to insert, update
and delete
'               att_steps records from the database.
'  Contact:     Reshma Tharamal
(reshmat@microsoft.com)
'
Option Explicit

' Local variable(s) to hold property value(s)
Private mlngStepId As Long
Private mstrVersionNo As String
Private mstrStepLabel As String
Private mstrStepTextFile As String
Private mstrStepText As String
Private mstrStartDir As String
Private mlngWorkspaceId As Integer
Private mlngParentStepId As Integer
Private mstrParentVersionNo As String
Private mintSequenceNo As Integer
Private mintStepLevel As Integer
Private mblnEnabledFlag As Boolean
Private mstrDegreeParallelism As String
Private mintExecutionMechanism As Integer
Private mstrFailureDetails As String
Private mintContinuationCriteria As Integer
Private mblnGlobalFlag As Boolean
Private mblnArchivedFlag As Boolean
Private mstrOutputFile As String
'Private mstrLogFile As String
Private mstrErrorFile As String
Private mdbsDatabase As Database
Private mintStepType As Integer
Private mintOperation As Operation
Private mlngPosition As Long
Private mstrIteratorName As String
Private mcIterators As cNodeCollections
Private mbIsNewVersion As Boolean
Private msOldVersion As String

' The following constants are used throughout the
project to
' indicate the different options selected by the user
' The options are presented to the user as control
arrays of
' option buttons. These constants have to be in sync
with the
' indexes of the option buttons.
' All the control arrays have an lbound of 1. The
value 0 is
' used to indicate that the property being
represented by the
' control array is not valid for the step
' Public enums are used since we cannot expose public
constants
' in class modules. gintNoOption is applicable to all
enums,
' but declared in the Execution method enum, since we
cannot
' declare it more than once.

' Is here as a comment
' Has been defined in public.bas with the other
object types
'Public Enum gintStepType
'    gintGlobalStep = 3
'    gintManagerStep
'    gintWorkerStep
'End Enum

' Execution Method options
Public Enum ExecutionMethod
    gintNoOption = 0
    gintExecuteODBC
    gintExecuteShell
End Enum

' Failure criteria options
Public Enum FailureCriteria
    gintFailureODBC = 1
```


© 2006 Hewlett-Packard Company. All rights reserved.

```
    gintFailureTextCompare
End Enum

' Continuation criteria options
' Note: Update the initialization of gsContCriteria
in Initialize() if the
' continuation criteria are modified
Public Enum ContinuationCriteria
    gintOnFailureAbort = 1
    gintOnFailureContinue
    gintOnFailureCompleteSiblings
    gintOnFailureAbortSiblings
    gintOnFailureSkipSiblings
    gintOnFailureAsk
End Enum

' The initial version #
Private Const mstrMinVersion As String = "0.0"

' End of constants for option button control arrays
' Used to indicate the source module name when errors
' are raised by this class
Private mstrSource As String
Private Const mstrModuleName As String = "cStep."

' The cSequence class is used to generate unique step
identifiers
Private mStepSeq As cSequence

' The StringSM class is used to carry out string
operations
Private mFieldValue As cStringSM
Private Sub NewVersion()

mbIsNewVersion = True
msOldVersion = mstrVersionNo

End Sub
Public Function IsNewVersion() As Boolean
    IsNewVersion = mbIsNewVersion
End Function

Public Function OldVersionNo() As String
    OldVersionNo = msOldVersion
End Function

Public Sub SaveIterators()
    ' This procedure checks if any changes have been
made
    ' to the iterators for the step. If so, it calls
the
    ' methods of the iterator class to commit the
changes
    Dim cItRec As cIterator
    Dim lngIndex As Long

    On Error GoTo SaveIteratorsErr

    For lngIndex = 0 To mcIterators.Count - 1
        Set cItRec = mcIterators(lngIndex)

        Select Case cItRec.IndOperation
            Case QueryOp
                ' No changes were made to the queried
Step.
                ' Do nothing

            Case InsertOp
                cItRec.Add mlngStepId, mstrVersionNo
                cItRec.IndOperation = QueryOp

            Case UpdateOp
                cItRec.Update mlngStepId,
mstrVersionNo
                cItRec.IndOperation = QueryOp

            Case DeleteOp
                cItRec.Delete mlngStepId,
mstrVersionNo
                ' Remove the record from the
collection
                mcIterators.Delete lngIndex

        End Select
    Next lngIndex

    Exit Sub

SaveIteratorsErr:
    LogErrors Errors
    mstrSource = mstrModuleName & "SaveIterators"
    On Error GoTo 0
    Err.Raise vbObjectError + errSaveFailed, _
            mstrSource, _
            LoadResString(errSaveFailed)

End Sub
Public Property Get IndOperation() As Operation

    IndOperation = mintOperation

End Property
Public Property Let IndOperation(ByVal vdata As
Operation)

    BugAssert vdata = QueryOp Or vdata = InsertOp Or
vdata = UpdateOp Or vdata = DeleteOp, "Invalid
operation"
    mintOperation = vdata

End Property

Public Function Iterators() As Variant
    ' Returns a variant containing all the iterators
that
    ' have been defined for the step

    Dim cStepIterators() As cIterator
    Dim cTempIt As cIterator
    Dim lngIndex As Long
    Dim lngItCount As Long

    On Error GoTo IteratorsErr

    lngItCount = 0
    For lngIndex = 0 To mcIterators.Count - 1
        ' Increase the array dimension and add the
constraint
        ' to it
        Set cTempIt = mcIterators(lngIndex)

        If cTempIt.IndOperation <> DeleteOp Then
            ReDim Preserve cStepIterators(lngItCount)
            Set cStepIterators(lngItCount) = cTempIt
            lngItCount = lngItCount + 1
        End If

    Next lngIndex

    If lngItCount = 0 Then
        Iterators = Empty
    Else
        Iterators = cStepIterators()
    End If

    Call QuickSort(Iterators)

    Exit Function

IteratorsErr:
    LogErrors Errors
    On Error GoTo 0
    Err.Raise vbObjectError + errIteratorsFailed, _
            mstrModuleName & "Iterators", _
            LoadResString(errIteratorsFailed)

End Function
Public Function IteratorCount() As Long
    ' Returns a count of all the iterators for the
step

    Dim lngItCount As Long
    Dim lngIndex As Long
    Dim cTempIt As cIterator

    On Error GoTo IteratorsErr

    lngItCount = 0
    For lngIndex = 0 To mcIterators.Count - 1

        If mcIterators(lngIndex).IndOperation <>
DeleteOp Then
            lngItCount = lngItCount + 1
        End If

    Next lngIndex

    IteratorCount = lngItCount

    Exit Function

IteratorsErr:
    LogErrors Errors
    On Error GoTo 0
    Err.Raise vbObjectError + errIteratorsFailed, _
            mstrSource, _
            LoadResString(errIteratorsFailed)

End Function
```


© 2006 Hewlett-Packard Company. All rights reserved.

```
Public Sub Validate()
    ' Each distinct object will have a Validate
method which
    ' will check if the class properties are valid.
This method
    ' will be used to check interdependant properties
that
    ' cannot be validated by the let procedures.
    ' It should be called by the add and modify
methods of the class

    ' Check if the step label has been specified
    If StringEmpty(mstrStepLabel) Then
        ShowError errStepLabelMandatory
        On Error GoTo 0
        Err.Raise vbObjectError + errValidateFailed,
_
                "Validate",
LoadResString(errValidateFailed)
    End If

    If Not IsStringEmpty(mstrStepText) And Not
IsStringEmpty(mstrStepTextFile) Then
        ShowError errStepTextOrFile
        On Error GoTo 0
        Err.Raise vbObjectError + errStepTextOrFile,
_
            "Validate",
LoadResString(errStepTextOrFile)
    End If

End Sub

Public Function IncVersionY() As String
    ' The version number for a step is stored in the
x.y
    ' format where x is the parent component and y is
the
    ' child component of the step. This function will
increment
    ' the y component of the step by 1

    On Error GoTo IncVersionYErr

    ' Store the old version number for the step
    Call NewVersion

    mstrVersionNo = Trim$(Str$(GetX(mstrVersionNo)))
& gstrVerSeparator & _
            Trim$(Str(GetY(mstrVersionNo) + 1))
    IncVersionY = mstrVersionNo

    Exit Function

IncVersionYErr:
    ' Log the error code raised by Visual Basic
    Call LogErrors(Errors)
    gstrSource = mstrModuleName & "IncVersionY"
    On Error GoTo 0
    Err.Raise vbObjectError + errIncVersionYFailed, _
            gstrSource, _
            LoadResString(errIncVersionYFailed)

End Function
Public Function IncVersionX() As String
    ' The version number for a step is stored in the
x.y
    ' format where x is the parent component and y is
the
    ' child component of the step. This function will
increment
    ' the y component of the step by 1 and reset the
x component
    ' to 0

    On Error GoTo IncVersionXErr

    ' Store the old version number for the step
    Call NewVersion

    mstrVersionNo = Trim$(Str$(GetX(mstrVersionNo) +
1)) & gstrVerSeparator & "0"
    IncVersionX = mstrVersionNo

    Exit Function

IncVersionXErr:
    ' Log the error code raised by Visual Basic
    Call LogErrors(Errors)
    gstrSource = mstrModuleName & "IncVersionX"
    On Error GoTo 0
    Err.Raise vbObjectError + errIncVersionXFailed, _
            gstrSource, _
            LoadResString(errIncVersionXFailed)

End Function


Private Function GetY(strVersion As String) As Long
    ' The version number for a step is stored in the
x.y
    ' format where x is the parent component and y is
the
    ' child component of the step. Given an argument
of type
    ' x.y, it returns y

    ' Truncate the fractional part to get the parent
component
    ' of the version number (x.y)
    GetY = Val(Mid(strVersion, InStr(strVersion,
gstrVerSeparator) + 1))

End Function
Private Function GetX(strVersion As String) As Long
    ' The version number for a step is stored in the
x.y
    ' format where x is the parent component and y is
the
    ' child component of the step. Given an argument
of type
    ' x.y, it returns x

    ' Truncate the fractional part to get the parent
component
    ' of the version number (x.y)
    GetX = Val(Left(strVersion, InStr(strVersion,
gstrVerSeparator) - 1))

End Function

Public Function Clone(Optional cCloneStep As cStep)
As cStep

    ' Creates a copy of a given step

    Dim lngIndex As Long
    Dim cItRec As cIterator
    Dim cItClone As cIterator

    On Error GoTo CloneErr

    If cCloneStep Is Nothing Then
        Set cCloneStep = New cStep
    End If

    ' Copy all the step properties to the newly
created step
    ' Initialize the global flag first since
subsequent
    ' validations might depend on it
    cCloneStep.GlobalFlag = mblnGlobalFlag
'    cCloneStep.GlobalRunMethod = mintGlobalRunMethod

    cCloneStep.StepType = mintStepType
    cCloneStep.StepId = mlngStepId
    cCloneStep.VersionNo = mstrVersionNo
    cCloneStep.StepLabel = mstrStepLabel
    cCloneStep.StepTextFile = mstrStepTextFile
    cCloneStep.StepText = mstrStepText
    cCloneStep.StartDir = mstrStartDir
    cCloneStep.WorkspaceId = mlngWorkspaceId
    cCloneStep.ParentStepId = mlngParentStepId
    cCloneStep.ParentVersionNo = mstrParentVersionNo
    cCloneStep.StepLevel = mintStepLevel
    cCloneStep.SequenceNo = mintSequenceNo
    cCloneStep.EnabledFlag = mblnEnabledFlag
    cCloneStep.DegreeParallelism =
mstrDegreeParallelism
    cCloneStep.ExecutionMechanism =
mintExecutionMechanism
    cCloneStep.FailureDetails = mstrFailureDetails
    cCloneStep.ContinuationCriteria =
mintContinuationCriteria
    cCloneStep.ArchivedFlag = mblnArchivedFlag
    cCloneStep.OutputFile = mstrOutputFile
'    cCloneStep.LogFile = mstrLogFile
    cCloneStep.ErrorFile = mstrErrorFile
    cCloneStep.IteratorName = mstrIteratorName

    cCloneStep.IndOperation = mintOperation
    cCloneStep.Position = mlngPosition

    Set cCloneStep.NodeDB = mdbsDatabase

    ' Clone all the iterators for the step
    For lngIndex = 0 To mcIterators.Count - 1
        Set cItRec = mcIterators(lngIndex)
        Set cItClone = cItRec.Clone
```


© 2006 Hewlett-Packard Company. All rights reserved.

```
        cCloneStep.LoadIterator cItClone
    Next lngIndex

    ' And set the return value to the newly created
step
    Set Clone = cCloneStep

    Exit Function

CloneErr:
    LogErrors Errors
    mstrSource = mstrModuleName & "Clone"
    On Error GoTo 0
    Err.Raise vbObjectError + errCloneFailed, _
            mstrSource, LoadResString(errCloneFailed)

End Function
'End Sub
'
Public Property Let OutputFile(ByVal vdata As String)

    mstrOutputFile = vdata

End Property

Public Property Get OutputFile() As String

    OutputFile = mstrOutputFile

End Property

'Public Property Let LogFile(ByVal vdata As String)
'
'    mstrLogFile = vdata
'
'End Property
'
'Public Property Get LogFile() As String
'
'    LogFile = mstrLogFile
'
'End Property

Public Property Let ErrorFile(ByVal vdata As String)

    mstrErrorFile = vdata

End Property
Public Property Let IteratorName(ByVal vdata As
String)

    mstrIteratorName = vdata

End Property

Public Property Get ErrorFile() As String

    ErrorFile = mstrErrorFile

End Property
Public Property Get IteratorName() As String

    IteratorName = mstrIteratorName

End Property

Public Property Set NodeDB(vdata As Database)

    Set mdbsDatabase = vdata
    Set mcIterators.NodeDB = vdata

End Property
Public Property Get NodeDB() As Database

    Set NodeDB = mdbsDatabase

End Property

Private Function IsStringEmpty(strToCheck As String)
As Boolean

    IsStringEmpty = (strToCheck = gstrEmptyString)

End Function

Public Property Let EnabledFlag(ByVal vdata As
Boolean)

    ' The enabled flag must be False for all global
steps.
    ' This check must be made by the global step
class. Only
    ' generic step validations will be carried out by
this
    ' class
    mblnEnabledFlag = vdata

End Property

Public Property Let GlobalFlag(ByVal vdata As
Boolean)

    mblnGlobalFlag = vdata

End Property
Public Property Get EnabledFlag() As Boolean

    EnabledFlag = mblnEnabledFlag

End Property

Public Property Let ArchivedFlag(ByVal vdata As
Boolean)

    mblnArchivedFlag = vdata

End Property

Public Property Get ArchivedFlag() As Boolean

    ArchivedFlag = mblnArchivedFlag

End Property

Public Property Get GlobalFlag() As Boolean

    GlobalFlag = mblnGlobalFlag

End Property

Public Sub Add()
    ' Inserts a step record into the database - it
initializes
    ' the necessary properties for the step and calls
InsertStepRec
    ' to do the database work

    On Error GoTo AddErr

    ' A new record would have the deleted_flag turned
off!
    mblnArchivedFlag = False

    Call InsertStepRec

    ' If a new version of a step has been created,
reset the old version info, since
    ' it's already been saved to the db
    If IsNewVersion() Then
        mbIsNewVersion = False
        msOldVersion = gstrEmptyString
    End If

    Exit Sub

AddErr:
    LogErrors Errors
    On Error GoTo 0
    Err.Raise vbObjectError + errAddStepFailed, _
            mstrModuleName & "Add",
LoadResString(errAddStepFailed)
End Sub
Private Sub InsertStepRec()
    ' Inserts a step record into the database
    ' It first generates the insert statement using
the different
    ' step properties and then executes it

    Dim strInsert As String
    Dim qy As DAO.QueryDef

    On Error GoTo InsertStepRecErr

    ' First check if the database object is valid
    Call CheckDB

    ' Check if the step record is valid
    Call Validate

    If IsNewVersion() Then
        Call UpdOldVersionsArchFlg
    End If

    ' Create a temporary querydef object
    strInsert = "insert into att_steps " & _
        "( workspace_id, step_id, version_no, " & _
        " step_label, step_file_name, step_text,
start_directory, " & _
```


© 2006 Hewlett-Packard Company. All rights reserved.

```
        " parent_step_id, parent_version_no,
sequence_no, " & _
        " enabled_flag, step_level, " & _
        " degree_parallelism, execution_mechanism, "
& _
        " failure_details, " & _
        " continuation_criteria, global_flag, " & _
        " archived_flag, " & _
        " output_file_name, error_file_name, " & _
        " iterator_name ) values ( "

    ' log_file_name,

#If USE_JET Then

    strInsert = strInsert & " [w_id], [s_id],
[ver_no], " & _
        " [s_label], [s_file_name], [s_text],
[s_start_dir], " & _
        " [p_step_id], [p_version_no], [seq_no], " &
_
        " [enabled], [s_level], [deg_parallelism], "
& _
        " [exec_mechanism], [fail_dtls], " & _
        " [cont_criteria], [global], [archived], " &
_
        " [output_file], [error_file], " & _
        " [it_name] ) "

    ' [log_file],

    Set qy =
mdbsDatabase.CreateQueryDef(gstrEmptyString,
strInsert)

    ' Call a procedure to execute the Querydef object
    Call AssignParameters(qy)

    qy.Execute dbFailOnError
    qy.Close
#Else

        strInsert = strInsert & Str(mlngWorkspaceId)
& ", " & Str(mlngStepId) & _
        ", " &
mFieldValue.MakeStringFieldValid(mstrVersionNo)

    ' For fields that may be null, call a function to
determine
    ' the string to be appended to the insert
statement
    strInsert = strInsert & ", " &
mFieldValue.MakeStringFieldValid(mstrStepLabel)
    strInsert = strInsert & ", " &
mFieldValue.MakeStringFieldValid(mstrStepTextFile)
    strInsert = strInsert & ", " &
mFieldValue.MakeStringFieldValid(mstrStepText)
    strInsert = strInsert & ", " &
mFieldValue.MakeStringFieldValid(mstrStartDir)

    strInsert = strInsert & ", " &
Str(mlngParentStepId) & _
        ", " &
mFieldValue.MakeStringFieldValid(mstrParentVersionNo)
& _
        ", " & Str(mintSequenceNo) & _
        ", " & Str(mblnEnabledFlag) & ", " &
Str(mintStepLevel)

    strInsert = strInsert & ", " &
mFieldValue.MakeStringFieldValid(mstrDegreeParallelis
m)
    strInsert = strInsert & ", " &
Str(mintExecutionMechanism)

    strInsert = strInsert & ", " &
mFieldValue.MakeStringFieldValid(mstrFailureDetails)
& _
        ", " & Str(mintContinuationCriteria) & _
        ", " & Str(mblnGlobalFlag) & _
        ", " & Str(mblnArchivedFlag)

    strInsert = strInsert & ", " &
mFieldValue.MakeStringFieldValid(mstrOutputFile)
'    strInsert = strInsert & ", " &
mFieldValue.MakeStringFieldValid(mstrLogFile)
    strInsert = strInsert & ", " &
mFieldValue.MakeStringFieldValid(mstrErrorFile)
    strInsert = strInsert & ", " &
mFieldValue.MakeStringFieldValid(mstrIteratorName)

    strInsert = strInsert & " ) "

    BugMessage strInsert
    mdbsDatabase.Execute strInsert, dbFailOnError

#End If

    Exit Sub

InsertStepRecErr:
    mstrSource = mstrModuleName & "InsertStepRec"
    LogErrors Errors
    On Error GoTo 0
    Err.Raise vbObjectError + errInsertStepFailed, _
            mstrSource,
LoadResString(errInsertStepFailed)
End Sub
Private Sub UpdOldVersionsArchFlg()
    ' Updates the archived flag on all old version
for the step to True

    Dim sUpdate As String
    Dim qy As DAO.QueryDef

    On Error GoTo UpdOldVersionsArchFlgErr
    mstrSource = mstrModuleName &
"UpdOldVersionsArchFlg"

#If USE_JET Then

    sUpdate = "update att_steps " & _
        " set archived_flag = True "

    ' Append the Where clause
    sUpdate = sUpdate & " where step_id = [s_id] " &
_
        " and version_no <> [ver_no]"

    Set qy =
mdbsDatabase.CreateQueryDef(gstrEmptyString, sUpdate)

    ' Call a procedure to execute the Querydef object
    Call AssignParameters(qy)
    qy.Execute dbFailOnError

    If qy.RecordsAffected = 0 Then
        On Error GoTo 0
        Err.Raise vbObjectError +
errModifyStepFailed, _
                mstrSource,
LoadResString(errModifyStepFailed)
    End If

    qy.Close

#Else

    sUpdate = "update att_steps " & _
        " set archived_flag = True "

    sUpdate = sUpdate & " where step_id = " &
Str(mlngStepId) & _
        " and version_no <> " &
mFieldValue.MakeStringFieldValid(mstrVersionNo)

    BugMessage sUpdate
    mdbsDatabase.Execute sUpdate, dbFailOnError
#End If

    Exit Sub

UpdOldVersionsArchFlgErr:
    mstrSource = mstrModuleName &
"UpdOldVersionsArchFlg"
    LogErrors Errors
    On Error GoTo 0
    Err.Raise vbObjectError + errModifyStepFailed, _
            mstrSource,
LoadResString(errModifyStepFailed)
End Sub
Public Sub InsertIterator(cItRecord As cIterator)
    ' Inserts the iterator record into the database

    Call cItRecord.Add(mlngStepId, mstrVersionNo)

End Sub
Public Sub UpdateIterator(cItRecord As cIterator)
    ' Updates the iterator record in the database

    Call cItRecord.Update(mlngStepId, mstrVersionNo)

End Sub
Public Sub UpdateIteratorVersion()
    ' Updates the iterator record in the database

    Dim lngIndex As Long
    Dim cTempIt As cIterator
```


© 2006 Hewlett-Packard Company. All rights reserved.

```
    On Error GoTo UpdateIteratorVersionErr

    For lngIndex = 0 To mcIterators.Count - 1
        ' Increase the array dimension and add the
constraint
        ' to it
        Set cTempIt = mcIterators(lngIndex)

        If cTempIt.IndOperation <> DeleteOp Then
            ' Set the operation to indicate an insert
            cTempIt.IndOperation = InsertOp
        End If

    Next lngIndex

    Exit Sub

UpdateIteratorVersionErr:
    mstrSource = mstrModuleName &
"UpdateIteratorVersion"
    LogErrors Errors
    On Error GoTo 0
    Err.Raise vbObjectError + errUpdateFailed, _
            mstrSource,
LoadResString(errUpdateFailed)

End Sub
Public Sub AddIterator(cItRecord As cIterator)
    ' Adds the iterator record to the collection of
iterators
    ' for the step

    Call mcIterators.Add(cItRecord)

End Sub
Public Sub AddAllIterators()
    ' Sets the indicator variable for all iterators
to insert

    Dim lngIndex As Long

    For lngIndex = 0 To mcIterators.Count - 1
        mcIterators(lngIndex).Validate
        mcIterators(lngIndex).IndOperation = InsertOp
    Next lngIndex

End Sub

Public Sub LoadIterator(cItRecord As cIterator)
    ' Adds the iterator record to the collection of
iterators
    ' for the step

    Call mcIterators.Load(cItRecord)

End Sub
Public Sub UnloadIterators()
    ' Unloads all iterator records for the step

    Dim lngIndex As Long

    For lngIndex = mcIterators.Count - 1 To 0 Step -1
        ' Calls the collection method to unload the
node
        ' from the array
        mcIterators.Unload lngIndex
    Next lngIndex

End Sub
Public Sub ModifyIterator(cItRecord As cIterator)
    ' Modifies the iterator record in the collection

    Call mcIterators.Modify(cItRecord)

End Sub
Public Sub DeleteIterator(cItRecord As cIterator)
    ' Deletes the iterator record from the database

    Call cItRecord.Delete(mlngStepId, mstrVersionNo)

End Sub
Public Sub RemoveIterator(cItRecord As cIterator)
    ' Marks the iterator record in the collection to
    ' indicate a delete

    Call mcIterators.Delete(cItRecord.Position)

End Sub


Private Sub AssignParameters(qyExec As DAO.QueryDef)
    ' Assigns values to the parameters in the
querydef object
    ' The parameter names are cryptic to make them
different
    ' from the actual field names. When the parameter
names
    ' are the same as the field names, parameters in
the
    ' where clause do not get created.

    Dim prmParam As DAO.Parameter

    On Error GoTo AssignParametersErr
    mstrSource = mstrModuleName & "AssignParameters"

    For Each prmParam In qyExec.Parameters
        Select Case prmParam.Name
            Case "[w_id]"
                prmParam.Value = mlngWorkspaceId
            Case "[s_id]"
                prmParam.Value = mlngStepId
            Case "[ver_no]"
                prmParam.Value = mstrVersionNo
            Case "[s_label]"
                prmParam.Value = mstrStepLabel
            Case "[s_file_name]"
                prmParam.Value = mstrStepTextFile
            Case "[s_text]"
                prmParam.Value = mstrStepText
            Case "[s_start_dir]"
                prmParam.Value = mstrStartDir
            Case "[p_step_id]"
                prmParam.Value = mlngParentStepId
            Case "[p_version_no]"
                prmParam.Value = mstrParentVersionNo
            Case "[seq_no]"
                prmParam.Value = mintSequenceNo
            Case "[enabled]"
                prmParam.Value = mblnEnabledFlag
            Case "[s_level]"
                prmParam.Value = mintStepLevel
            Case "[deg_parallelism]"
                prmParam.Value =
mstrDegreeParallelism
            Case "[exec_mechanism]"
                prmParam.Value =
mintExecutionMechanism
            Case "[fail_dtls]"
                prmParam.Value = mstrFailureDetails
            Case "[cont_criteria]"
                prmParam.Value =
mintContinuationCriteria
            Case "[global]"
                prmParam.Value = mblnGlobalFlag
            Case "[archived]"
                prmParam.Value = mblnArchivedFlag
            Case "[output_file]"
                prmParam.Value = mstrOutputFile
'            Case "[log_file]"
'                prmParam.Value = mstrLogFile
            Case "[error_file]"
                prmParam.Value = mstrErrorFile
            Case "[it_name]"
                prmParam.Value = mstrIteratorName
            Case Else
                ' Write the parameter name that is
faulty
                WriteError errInvalidParameter,
mstrSource, _
                        prmParam.Name
                On Error GoTo 0
                Err.Raise errInvalidParameter,
mstrSource, _

LoadResString(errInvalidParameter)
        End Select
    Next prmParam

    If qyExec.Parameters("s_id") = 0 Or
StringEmpty(qyExec.Parameters("ver_no")) Then
        WriteError errInvalidParameter, mstrSource
        On Error GoTo 0
        Err.Raise errInvalidParameter, mstrSource,
LoadResString(errInvalidParameter)
    End If

    Exit Sub

AssignParametersErr:

    mstrSource = mstrModuleName & "AssignParameters"
    Call LogErrors(Errors)
    On Error GoTo 0
    Err.Raise vbObjectError +
errAssignParametersFailed, _
        mstrSource,
LoadResString(errAssignParametersFailed)
```


© 2006 Hewlett-Packard Company. All rights reserved.

```
End Sub

Public Sub Modify()

    Dim strUpdate As String
    Dim qy As QueryDef

    On Error GoTo ModifyErr
    mstrSource = mstrModuleName & "Modify"

    ' Check if the database object is valid
    Call CheckDB

    ' Check if the step record is valid
    Call Validate

    ' The step_id and version_no will never be
updated -
    ' whenever a step is modified a copy of the old
step will
    ' be created with an incremented version_no

#If USE_JET Then

    strUpdate = "update att_steps " & _
        " set step_label = [s_label] " & _
        " , step_file_name = [s_file_name] " & _
        " , step_text = [s_text] " & _
        " , start_directory = [s_start_dir] " & _
        " , workspace_id = [w_id] " & _
        " , parent_step_id = [p_step_id] " & _
        " , parent_version_no = [p_version_no] " & _
        " , sequence_no = [seq_no] " & _
        " , step_level = [s_level] " & _
        " , enabled_flag = [enabled] " & _
        " , degree_parallelism = [deg_parallelism] "
& _
        " , execution_mechanism = [exec_mechanism] "
& _
        " , failure_details = [fail_dtls] " & _
        " , continuation_criteria = [cont_criteria] "
& _
        " , global_flag = [global] " & _
        " , archived_flag = [archived] " & _
        " , output_file_name = [output_file] " & _
        " , error_file_name = [error_file] " & _
        " , iterator_name = [it_name] "

        ' " , log_file_name = [log_file] " & _

    ' Append the Where clause
    strUpdate = strUpdate & " where step_id = [s_id]
" & _
        " and version_no = [ver_no]"

    Set qy =
mdbsDatabase.CreateQueryDef(gstrEmptyString,
strUpdate)

    ' Call a procedure to execute the Querydef object
    Call AssignParameters(qy)
    qy.Execute dbFailOnError

    If qy.RecordsAffected = 0 Then
        On Error GoTo 0
        Err.Raise vbObjectError +
errModifyStepFailed, _
                mstrSource,
LoadResString(errModifyStepFailed)
    End If

    qy.Close

#Else

    strUpdate = "update att_steps " & _
        " set step_label = "

    ' For fields that may be null, call a function to
determine
    ' the string to be appended to the update
statement
    strUpdate = strUpdate &
mFieldValue.MakeStringFieldValid(mstrStepLabel)

    strUpdate = strUpdate & " , step_file_name = " &
mFieldValue.MakeStringFieldValid(mstrStepTextFile)
    strUpdate = strUpdate & " , step_text = " &
mFieldValue.MakeStringFieldValid(mstrStepText)
    strUpdate = strUpdate & " , start_directory = " &
mFieldValue.MakeStringFieldValid(mstrStartDir)

    strUpdate = strUpdate & " , workspace_id = " &
Str(mlngWorkspaceId) & _
        " , parent_step_id = " &
Str(mlngParentStepId) & _
        " , parent_version_no = " &
mFieldValue.MakeStringFieldValid(mstrParentVersionNo)
& _
        " , sequence_no = " & Str(mintSequenceNo) & _
        " , step_level = " & Str(mintStepLevel) & _
        " , enabled_flag = " & Str(mblnEnabledFlag) &
_
        " , degree_parallelism = " &
mFieldValue.MakeStringFieldValid(mstrDegreeParallelis
m) & _
        " , execution_mechanism = " &
Str(mintExecutionMechanism) & _
        " , failure_details = " &
mFieldValue.MakeStringFieldValid(mstrFailureDetails)
& _
        " , continuation_criteria = " &
Str(mintContinuationCriteria) & _
        " , global_flag = " & Str(mblnGlobalFlag) & _
        " , archived_flag = " & Str(mblnArchivedFlag)
& _
        " , output_file_name = " &
mFieldValue.MakeStringFieldValid(mstrOutputFile) & _
        " , error_file_name = " &
mFieldValue.MakeStringFieldValid(mstrErrorFile) & _
        " , iterator_name = " &
mFieldValue.MakeStringFieldValid(mstrIteratorName)

'        " , log_file_name = " &
mFieldValue.MakeStringFieldValid(mstrLogFile) & _

    strUpdate = strUpdate & " where step_id = " &
Str(mlngStepId) & _
        " and version_no = " &
mFieldValue.MakeStringFieldValid(mstrVersionNo)

    BugMessage strUpdate
    mdbsDatabase.Execute strUpdate, dbFailOnError
#End If

    Exit Sub

ModifyErr:
    LogErrors Errors
    mstrSource = mstrModuleName & "Modify"
    On Error GoTo 0
    Err.Raise vbObjectError + errModifyStepFailed, _
            mstrSource,
LoadResString(errModifyStepFailed)
End Sub
Private Sub CheckDB()
    ' Check if the database object has been
initialized

    If mdbsDatabase Is Nothing Then
        ShowError errInvalidDB
        On Error GoTo 0
        Err.Raise vbObjectError + errInvalidDB, _
            mstrModuleName,
LoadResString(errInvalidDB)
    End If

End Sub

Public Sub Delete()

    Dim strDelete As String
    Dim qy As DAO.QueryDef

    On Error GoTo DeleteErr

    Call CheckDB

    strDelete = "delete from att_steps " & _
            " where step_id = [s_id] " & _
            " and version_no = [ver_no] "
'    mdbsDatabase.Execute strDelete, dbFailOnError
    Set qy =
mdbsDatabase.CreateQueryDef(gstrEmptyString,
strDelete)

    Call AssignParameters(qy)
    qy.Execute dbFailOnError

    qy.Close

    Exit Sub

DeleteErr:
    LogErrors Errors
    On Error GoTo 0
    Err.Raise vbObjectError + errDeleteStepFailed, _
```


© 2006 Hewlett-Packard Company. All rights reserved.

```
            mstrModuleName & "Delete",
LoadResString(errDeleteStepFailed)
End Sub
Public Property Get DegreeParallelism() As String

    DegreeParallelism = mstrDegreeParallelism

End Property
Public Property Get Position() As Long

    Position = mlngPosition

End Property

Public Property Let DegreeParallelism(ByVal vdata As
String)

    ' The degree of parallelism must be zero for all
global steps
    ' This check must be made by the global step
class. Only
    ' generic step validations will be carried out by
this
    ' class
    mstrDegreeParallelism = vdata

End Property

Public Property Let ExecutionMechanism(ByVal vdata As
ExecutionMethod)

    BugAssert vdata = gintExecuteODBC Or vdata =
gintExecuteShell Or vdata = gintNoOption, _
            "Execution mechanism invalid"
    mintExecutionMechanism = vdata

End Property

Public Property Let FailureDetails(ByVal vdata As
String)

    mstrFailureDetails = vdata

End Property
Public Property Let SequenceNo(ByVal vdata As
Integer)
    mintSequenceNo = vdata
End Property

Public Property Let Position(ByVal vdata As Long)
    mlngPosition = vdata
End Property

Public Property Let ParentStepId(ByVal vdata As Long)
    mlngParentStepId = vdata
End Property

Public Property Get SequenceNo() As Integer

    SequenceNo = mintSequenceNo

End Property
Public Property Get StepLevel() As Integer
    StepLevel = mintStepLevel
End Property

Public Property Get ParentVersionNo() As String
    ParentVersionNo = mstrParentVersionNo
End Property

Public Property Let ParentVersionNo(ByVal vdata As
String)
    mstrParentVersionNo = vdata
End Property

Public Property Get ParentStepId() As Long
    ParentStepId = mlngParentStepId
End Property

Public Property Let WorkspaceId(ByVal vdata As Long)
    mlngWorkspaceId = vdata
End Property

Public Property Let VersionNo(ByVal vdata As String)
    ' The version number of a step is stored in the
x.y format where
    ' x represents a change to the step as a result
of modifications
    ' to any of the step properties
    ' y represents a change to the step as a result
of modifications
    ' to the sub-steps associated with it. Hence the
y-component
    ' of the version will be incremented when a sub-
step is added,
    ' modified or deleted
    ' x will be referred to throughout this code as
the parent
    ' component of the version and y will be referred
to as the
    ' child component of the version
    ' The version information for a step is
maintained by the
    ' calling function

    mstrVersionNo = vdata

End Property

Public Property Get StepType() As gintStepType

    On Error GoTo StepTypeErr

    If mintStepType = 0 Then
        ' The step type variable has not been
initialized -
        If mblnGlobalFlag Then
            mintStepType = gintGlobalStep
        ElseIf IsStringEmpty(mstrStepText) And _
                IsStringEmpty(mstrStepTextFile) Then
            mintStepType = gintManagerStep
        Else
            mintStepType = gintWorkerStep
        End If
    End If

    StepType = mintStepType

    Exit Property

StepTypeErr:
    LogErrors Errors
    mstrSource = mstrModuleName & "StepType"
    On Error GoTo 0
    Err.Raise vbObjectError + errGetStepTypeFailed, _
            mstrSource, _
            LoadResString(errGetStepTypeFailed)

End Property

Public Property Let StepType(vdata As gintStepType)

    On Error GoTo StepTypeErr

    Select Case vdata
        Case gintGlobalStep, gintManagerStep,
gintWorkerStep
            mintStepType = vdata

        Case Else
            On Error GoTo 0
            Err.Raise vbObjectError +
errStepTypeInvalid, _
                    mstrModuleName & "StepType",
LoadResString(errStepTypeInvalid)
    End Select
    Exit Property

StepTypeErr:
    LogErrors Errors
    mstrSource = mstrModuleName & "StepType"
    On Error GoTo 0
    Err.Raise vbObjectError + errLetStepTypeFailed, _
            mstrSource, _
            LoadResString(errLetStepTypeFailed)

End Property

Public Property Get WorkspaceId() As Long
    WorkspaceId = mlngWorkspaceId
End Property

Public Property Get ContinuationCriteria() As
ContinuationCriteria

    ContinuationCriteria = mintContinuationCriteria

End Property

Public Property Let ContinuationCriteria(ByVal vdata
As ContinuationCriteria)

    ' The Continuation criteria must be null for all
global steps
    ' and non-null for all manager and worker steps
    ' These checks will have to be made by the
corresponding
```


© 2006 Hewlett-Packard Company. All rights reserved.

```
    ' classes - only generic step validations will be
made
    ' by this class
    BugAssert vdata = gintOnFailureAbortSiblings Or
vdata = gintOnFailureCompleteSiblings _
                Or vdata = gintOnFailureSkipSiblings
Or vdata = gintOnFailureAbort _
                Or vdata = gintOnFailureContinue Or
vdata = gintOnFailureAsk _
                Or vdata = gintNoOption, _
                "Invalid continuation criteria"
    mintContinuationCriteria = vdata

End Property
Public Property Get ExecutionMechanism() As
ExecutionMethod

    ExecutionMechanism = mintExecutionMechanism

End Property


Public Property Get FailureDetails() As String

    FailureDetails = mstrFailureDetails

End Property

Public Property Let StepText(ByVal vdata As String)
    ' Has to be null for manager steps
    ' The check will have to be made by the user
interface or
    ' by the manager step class
    mstrStepText = vdata
End Property
Public Property Let StepLevel(ByVal vdata As Integer)

    ' The step level must be zero for all global
steps
    ' This check must be made in the global step
class
    mintStepLevel = vdata

End Property
Public Property Get StepText() As String
    StepText = mstrStepText
End Property

Public Property Let StepTextFile(ByVal vdata As
String)
    ' Has to be null for manager steps
    ' The check will have to be made by the user
interface and
    ' by the manager step class
    mstrStepTextFile = vdata
End Property

Public Property Get StepTextFile() As String
    StepTextFile = mstrStepTextFile
End Property

Public Property Let StepLabel(ByVal vdata As String)
    ' Cannot be null for manager steps
    ' But this check cannot be made here since we do
not know
    ' at this point if the step being created is a
manager
    ' or a worker step
    ' The check will have to be made by the user
interface and
    ' by the manager step class
    mstrStepLabel = vdata
End Property

Public Property Get StepLabel() As String
    StepLabel = mstrStepLabel
End Property

Public Property Let StartDir(ByVal vdata As String)
    mstrStartDir = vdata
End Property

Public Property Get StartDir() As String
    StartDir = mstrStartDir
End Property

Public Property Get VersionNo() As String
    ' The version number of a step is stored in the
x.y format where
    ' x represents a change to the step as a result
of modifications
    ' to any of the step properties
    ' y represents a change to the step as a result
of modifications
    ' to the sub-steps associated with it. Hence the
y-component
    ' of the version will be incremented when a sub-
step is added,
    ' modified or deleted
    ' x will be referred to throughout this code as
the parent
    ' component of the version and y will be referred
to as the
    ' child component of the version
    ' The version information for a step is
maintained by the
    ' calling function

    VersionNo = mstrVersionNo

End Property

Public Property Get StepId() As Long

    StepId = mlngStepId

End Property
Public Property Get NextStepId() As Long

    Dim lngNextId As Long

    On Error GoTo NextStepIdErr

    ' First check if the database object is valid
    Call CheckDB

    ' Retrieve the next identifier using the sequence
class
    Set mStepSeq = New cSequence
    Set mStepSeq.IdDatabase = mdbsDatabase
    mStepSeq.IdentifierColumn = "step_id"
    lngNextId = mStepSeq.Identifier
    Set mStepSeq = Nothing

    NextStepId = lngNextId
    Exit Property

NextStepIdErr:
    LogErrors Errors
    mstrSource = mstrModuleName & "NextStepId"
    On Error GoTo 0
    Err.Raise vbObjectError + errStepIdGetFailed, _
        mstrSource, LoadResString(errStepIdGetFailed)

End Property
Public Property Let StepId(ByVal vdata As Long)

    mlngStepId = vdata

End Property

Private Sub Class_Initialize()

    ' Initialize the operation indicator variable to
Query
    ' It will be modified later by the collection
class when
    ' inserts, updates or deletes are performed
    mintOperation = QueryOp
    mbIsNewVersion = False
    msOldVersion = gstrEmptyString

    Set mFieldValue = New cStringSM
    Set mcIterators = New cNodeCollections

End Sub

Private Sub Class_Terminate()

    Set mFieldValue = Nothing
    Set mcIterators = Nothing

End Sub
```

cStepTree.cls

```
VERSION 1.0 CLASS
BEGIN
  MultiUse = -1  'True
END
Attribute VB_Name = "cStepTree"
Attribute VB_GlobalNameSpace = False
Attribute VB_Creatable = True
Attribute VB_PredeclaredId = False
Attribute VB_Exposed = False
'  FILE:        cStepTree.cls
```


© 2006 Hewlett-Packard Company. All rights reserved.

```
'               Microsoft TPC-H Kit Ver. 1.00
'               Copyright Microsoft, 1999
'               All Rights Reserved
'
'
'  PURPOSE:     Implements step navigation functions
such as determining
'               the child of a step and so on.
'  Contact:     Reshma Tharamal
(reshmat@microsoft.com)
'
Option Explicit

' Used to indicate the source module name when errors
' are raised by this class
Private Const mstrModuleName As String = "cStepTree."
Private mstrSource As String

Public StepRecords As cArrSteps
Public Property Get HasChild(Optional ByVal StepKey
As String, _
        Optional ByVal StepId As Long = 0) As Boolean

    Dim lTemp As Long

    HasChild = False
    StepId = GetStepId(StepKey, StepId)

    For lTemp = 0 To StepRecords.StepCount - 1
        If StepRecords(lTemp).StepType <>
gintGlobalStep And StepRecords(lTemp).ParentStepId =
StepId Then
            HasChild = True
            Exit For
        End If
    Next lTemp

End Property
Public Property Get ChildStep(Optional ByVal StepKey
As String, _
        Optional ByVal StepId As Long = 0) As cStep

    Dim lTemp As Long

    Set ChildStep = Nothing
    StepId = GetStepId(StepKey, StepId)

    For lTemp = 0 To StepRecords.StepCount - 1
        If StepRecords(lTemp).StepType <>
gintGlobalStep And StepRecords(lTemp).ParentStepId =
StepId And _
                StepRecords(lTemp).SequenceNo =
gintMinSequenceNo Then
            Set ChildStep = StepRecords(lTemp)
            Exit For
        End If
    Next lTemp

End Property
Public Property Get NextStep(Optional ByVal StepKey
As String, _
        Optional ByVal StepId As Long = 0) As cStep

    Dim lTemp As Long
    Dim cChildStep As cStep

    Set NextStep = Nothing
    StepId = GetStepId(StepKey, StepId)
    Set cChildStep = StepRecords.QueryStep(StepId)

    For lTemp = 0 To StepRecords.StepCount - 1
        If StepRecords(lTemp).StepType <>
gintGlobalStep And _
                StepRecords(lTemp).ParentStepId =
cChildStep.ParentStepId And _
                StepRecords(lTemp).SequenceNo =
cChildStep.SequenceNo + 1 Then
            Set NextStep = StepRecords(lTemp)
            Exit For
        End If
    Next lTemp

End Property
Private Function GetStepId(Optional ByVal StepKey As
String, _
        Optional ByVal StepId As Long = 0) As Long
    If StepId = 0 Then
        If StringEmpty(StepKey) Then
            Err.Raise vbObjectError +
errMandatoryParameterMissing, _
                    mstrModuleName & "GetStepId",
LoadResString(errMandatoryParameterMissing)
        Else
            GetStepId = IIf(IsLabel(StepKey), 0,
MakeIdentifierValid(StepKey))
        End If
    Else
        GetStepId = StepId
    End If
End Function
```

cStringSM.cls

```
VERSION 1.0 CLASS
BEGIN
  MultiUse = -1  'True
END
Attribute VB_Name = "cStringSM"
Attribute VB_GlobalNameSpace = False
Attribute VB_Creatable = True
Attribute VB_PredeclaredId = False
Attribute VB_Exposed = False
'  FILE:        cStringSM.cls
'               Microsoft TPC-H Kit Ver. 1.00
'               Copyright Microsoft, 1999
'               All Rights Reserved
'
'
'  PURPOSE:     This module contains common
procedures that can be used
'               to manipulate strings
'               It is called StringSM, since String
is a Visual Basic keyword
'  Contact:     Reshma Tharamal
(reshmat@microsoft.com)
'
Option Explicit

' Used to indicate the source module name when errors
' are raised by this class
Private mstrSource As String
Private Const mstrModuleName As String = "cStringSM."

Private mstrText As String

Private Const mstrNullValue = "null"
Private Const mstrSQ = "'"
Private Const mstrEnvVarSeparator = "%"
Public Function InsertEnvVariables( _
        Optional ByVal strComString As String) As
String
    ' This function replaces all environment
variables in
    ' the passed in string with their values - they
are
    ' enclosed by "%"

    Dim intPos As Integer
    Dim intEndPos As Integer
    Dim strEnvVariable As String
    Dim strValue As String
    Dim strCommand As String

    On Error GoTo InsertEnvVariablesErr
    mstrSource = mstrModuleName &
"InsertEnvVariables"

    ' Initialize the return value of the function to
the
    ' passed in command
    If IsStringEmpty(strComString) Then
        strCommand = mstrText
    Else
        strCommand = strComString
    End If

    intPos = InStr(strCommand, mstrEnvVarSeparator)
    Do While intPos <> 0
        ' Extract the environment variable from the
passed
        ' in string
        intEndPos = InStr(intPos + 1, strCommand,
mstrEnvVarSeparator)
        strEnvVariable = Mid(strCommand, intPos + 1,
intEndPos - intPos - 1)

        ' Get the value of the variable and call a
function
        ' to replace the variable with it's value
        strValue = Environ$(strEnvVariable)
        strCommand = ReplaceSubString(strCommand, _
                mstrEnvVarSeparator & strEnvVariable
& mstrEnvVarSeparator, _
                strValue)

        intPos = InStr(strCommand,
mstrEnvVarSeparator)
    Loop
```


© 2006 Hewlett-Packard Company. All rights reserved.

```
    InsertEnvVariables = strCommand
    Exit Function

InsertEnvVariablesErr:
    ' Log the error code raised by Visual Basic
    Call LogErrors(Errors)
    ' Return an empty string
    InsertEnvVariables = gstrEmptyString

End Function
Public Function MakeStringFieldValid( _
        Optional strField As String =
gstrEmptyString) As String
    ' Returns a string that can be appended to any
insert
    ' or modify (sql) statement
    ' If an argument is not passed to this function,
the
    ' default text property is used

    Dim strTemp As String

    On Error GoTo MakeStringFieldValidErr

    If IsStringEmpty(strField) Then
        strTemp = mstrText
    Else
        strTemp = strField
    End If

    ' It checks whether the text is empty
    ' If so, it returns the string, "null"
    If IsStringEmpty(strTemp) Then
        MakeStringFieldValid = mstrNullValue
    Else
        ' Single-quotes have to be replaced by two
single-quotes,
        ' since a single-quote is the identifier
delimiter
        ' character - call a procedure to do the
replace
        strTemp = ReplaceSubString(strTemp, mstrSQ,
mstrSQ & mstrSQ)

        ' Replace pipe characters with the
corresponding chr function
        strTemp = ReplaceSubString(strTemp, "|", "' &
Chr(124) & '")

        ' Enclose the string in single quotes
        MakeStringFieldValid = mstrSQ & strTemp &
mstrSQ

    End If

    Exit Function

MakeStringFieldValidErr:
    mstrSource = mstrModuleName &
"MakeStringFieldValid"
    LogErrors Errors
    On Error GoTo 0
    Err.Raise vbObjectError +
errMakeFieldValidFailed, _
            mstrSource,
LoadResString(errMakeFieldValidFailed)

End Function
Public Function MakeDateFieldValid( _
        Optional dtmField As Date = gdtmEmpty) As
String
    ' Returns a string that can be appended to any
insert
    ' or modify (sql) statement

    ' Enclose the date in single quotes
    MakeDateFieldValid = mstrSQ & dtmField & mstrSQ

End Function

Private Function IsStringEmpty(strToCheck As String)
As Boolean

    If strToCheck = gstrEmptyString Then
        IsStringEmpty = True
    Else
        IsStringEmpty = False
    End If

End Function
Public Function ReplaceSubString(ByVal MainString As
String, _
        ByVal ReplaceString As String, _
        ByVal ReplaceWith As String) As String

    ' Replaces all occurrences of ReplaceString in
MainString with ReplaceWith

    Dim intPos As Integer
    Dim strTemp As String

    On Error GoTo ReplaceSubStringErr

    strTemp = MainString

    intPos = InStr(strTemp, ReplaceString)
    Do While intPos <> 0
        strTemp = Left(strTemp, intPos - 1) &
ReplaceWith & _
                Mid(strTemp, intPos +
Len(ReplaceString))
        intPos = InStr(intPos + Len(ReplaceString) +
1, strTemp, ReplaceString)
    Loop
    ReplaceSubString = strTemp

    Exit Function

ReplaceSubStringErr:
    Call LogErrors(Errors)
    mstrSource = mstrModuleName & "ReplaceSubString"
    On Error GoTo 0
    Err.Raise vbObjectError + errParseStringFailed, _
        mstrSource, _
        LoadResString(errParseStringFailed)

End Function

Public Property Get Text() As String
Attribute Text.VB_UserMemId = 0
    Text = mstrText
End Property

Public Property Let Text(ByVal vdata As String)
    mstrText = vdata
End Property
```

cSubStep.cls

```
VERSION 1.0 CLASS
BEGIN
  MultiUse = -1  'True
END
Attribute VB_Name = "cSubStep"
Attribute VB_GlobalNameSpace = False
Attribute VB_Creatable = True
Attribute VB_PredeclaredId = False
Attribute VB_Exposed = False
'  FILE:        cSubStep.cls
'               Microsoft TPC-H Kit Ver. 1.00
'               Copyright Microsoft, 1999
'               All Rights Reserved
'
'
'  PURPOSE:     This module encapsulates the
properties of sub-steps
'               that are used during the execution of
a workspace.
'  Contact:     Reshma Tharamal
(reshmat@microsoft.com)
'
Option Explicit

' Used to indicate the source module name when errors
' are raised by this class
Private Const mstrModuleName As String = "cSubStep"

Private mlngStepId As Long
Private mintRunning As Integer ' Number of running
tasks
Private mintComplete As Integer ' Number of completed
tasks
' The last iterator for this sub-step
Private mcLastIterator As cRunItDetails

Public Function NewIteration(cStepRec As cStep) As
cIterator
    ' Calls a procedure to determine the next
iterator value
    ' for the passed in step - returns the value to
be used
    ' in the iteration.
    ' It updates the instance node with the new
iteration
    ' for the step.
```


© 2006 Hewlett-Packard Company. All rights reserved.

```
    Dim cItRec As cIterator

    On Error GoTo NewIterationErr

    ' Call a function that will populate an iterator
record
    ' with the iterator values
    Set cItRec = NextIteration(cStepRec)

    ' Initialize the run node with the new iterator
    ' values
    If Not mcLastIterator Is Nothing Then
        If cItRec Is Nothing Then
            mcLastIterator.Value = gstrEmptyString
        Else
            mcLastIterator.Value = cItRec.Value

            ' And if the iterator is a list of
values, then update
            ' the sequence number as well
            If mcLastIterator.IteratorType =
gintValue Then
                mcLastIterator.Sequence =
cItRec.SequenceNo
            End If
        End If
    End If

    Set NewIteration = cItRec
    Set cItRec = Nothing

    Exit Function

NewIterationErr:
    ' Log the error code raised by Visual Basic
    Call LogErrors(Errors)
    On Error GoTo 0
    Err.Raise vbObjectError + errIterateFailed,
mstrModuleName, _
        LoadResString(errIterateFailed)

End Function
Public Function NextIteration(cStepRec As cStep) As
cIterator

    ' Retrieves the next iterator value for the
passed in step -
    ' returns an iterator record with the new
iterator values

    Dim cItRec As cIterator
    Dim vntIterators As Variant
    Dim lngValue As String

    On Error GoTo NextIterationErr

    vntIterators = cStepRec.Iterators

    If Not mcLastIterator Is Nothing Then
        ' The run node contains the iterator details
        ' Get the next value for the iterator
        If mcLastIterator.IteratorType = gintValue
Then
            ' Find the next iterator that appears in
the list of
            ' iterator values
            Set cItRec = NextInSequence(vntIterators,
mcLastIterator.Sequence)
        Else
            lngValue =
CLng(Trim$(mcLastIterator.Value))
            ' Determine whether the new iterator
value falls in the
            ' range between From and To
            If (mcLastIterator.RangeStep > 0 And _
                    (mcLastIterator.RangeFrom <=
mcLastIterator.RangeTo) And _
                    (mcLastIterator.RangeStep +
lngValue) <= mcLastIterator.RangeTo) Or _
                    (mcLastIterator.RangeStep < 0 And
_
                    (mcLastIterator.RangeFrom >=
mcLastIterator.RangeTo) And _
                    (mcLastIterator.RangeStep +
lngValue) >= mcLastIterator.RangeTo) Then
                Set cItRec = New cIterator
                cItRec.Value =
Trim$(CStr(mcLastIterator.RangeStep + lngValue))
            Else
                Set cItRec = Nothing
            End If
        End If
    Else
        Set cItRec = Nothing
    End If

    Set NextIteration = cItRec
    Exit Function

NextIterationErr:
    ' Log the error code raised by Visual Basic
    Call LogErrors(Errors)
    On Error GoTo 0
    Err.Raise vbObjectError + errIterateFailed,
mstrModuleName, _
        LoadResString(errIterateFailed)

End Function
Public Sub InitializeIt(cPendingStep As cStep, _
        ColParameters As cArrParameters, _
        Optional vntIterators As Variant)

    ' Initializes the LastIteration structure with
the iterator details for the
    ' passed in step

    On Error GoTo InitializeItErr

    If IsMissing(vntIterators) Then
        vntIterators = cPendingStep.Iterators
    End If

    If IsArray(vntIterators) And Not
IsEmpty(vntIterators) Then
        mcLastIterator.IteratorName =
cPendingStep.IteratorName
        If
vntIterators(LBound(vntIterators)).IteratorType = _
                gintValue Then
            mcLastIterator.IteratorType = gintValue
            ' Since the sequence numbers begin at 0
            mcLastIterator.Sequence =
gintMinIteratorSequence - 1
        Else
            mcLastIterator.IteratorType = gintFrom
            Call InitializeItRange(vntIterators,
cPendingStep.WorkspaceId, _
                    ColParameters)
        End If
    Else
        Set mcLastIterator = Nothing
    End If

    Exit Sub

InitializeItErr:
    ' Log the error code raised by Visual Basic
    Call LogErrors(Errors)
    On Error GoTo 0
    Err.Raise vbObjectError + errIterateFailed,
mstrModuleName, _
        LoadResString(errIterateFailed)

End Sub

Private Sub InitializeItRange(vntIterators As
Variant, ByVal lWorkspace As Long, _
        ColParameters As cArrParameters)

    ' Initializes the LastIteration structure for
range iterators from the
    ' passed in variant containing the iterator
records

    Dim lngIndex As Long
    Dim cItRec As cIterator

    On Error GoTo InitializeItRangeErr

    If IsArray(vntIterators) And Not
IsEmpty(vntIterators) Then

        ' Check if the iterator range has been
completely initialized
        RangeComplete (vntIterators)

        ' Initialize the Run node with the values for
the From,
        ' To and Step boundaries
        For lngIndex = LBound(vntIterators) To
UBound(vntIterators)
            Set cItRec = vntIterators(lngIndex)
            Select Case cItRec.IteratorType
                Case gintFrom
                    mcLastIterator.RangeFrom =
SubstituteParameters(cItRec.Value, lWorkspace,
WspParameters:=ColParameters)
                Case gintTo
```


© 2006 Hewlett-Packard Company. All rights reserved.

```
                    mcLastIterator.RangeTo =
SubstituteParameters(cItRec.Value, lWorkspace,
WspParameters:=ColParameters)
                Case gintStep
                    mcLastIterator.RangeStep =
SubstituteParameters(cItRec.Value, lWorkspace,
WspParameters:=ColParameters)
                Case Else
                    On Error GoTo 0
                    Err.Raise vbObjectError +
errTypeInvalid, mstrModuleName, _

LoadResString(errTypeInvalid)
            End Select
        Next lngIndex

        mcLastIterator.Value =
Trim$(CStr(mcLastIterator.RangeFrom -
mcLastIterator.RangeStep))
    End If

    Exit Sub

InitializeItRangeErr:
    ' Log the error code raised by Visual Basic
    Call LogErrors(Errors)
    On Error GoTo 0
    Err.Raise vbObjectError + errIterateFailed,
mstrModuleName, _
        LoadResString(errIterateFailed)

End Sub
Private Function NextInSequence(vntIterators As
Variant, _
        lngOldSequence As Long) As cIterator

    Dim lngIndex As Long
    Dim cItRec As cIterator

    On Error GoTo NextInSequenceErr

    If IsArray(vntIterators) And Not
IsEmpty(vntIterators) Then
        For lngIndex = LBound(vntIterators) To
UBound(vntIterators)
            Set cItRec = vntIterators(lngIndex)
            If cItRec.IteratorType <> gintValue Then
                On Error GoTo 0
                Err.Raise vbObjectError +
errTypeInvalid, mstrModuleName, _
                        LoadResString(errTypeInvalid)
            End If
            If cItRec.SequenceNo = lngOldSequence + 1
Then
                Exit For
            End If

        Next lngIndex

        If cItRec.SequenceNo <> lngOldSequence + 1
Then
            Set cItRec = Nothing
        End If
    Else
        Set cItRec = Nothing
    End If

    Set NextInSequence = cItRec

    Exit Function

NextInSequenceErr:
    ' Log the error code raised by Visual Basic
    Call LogErrors(Errors)
    On Error GoTo 0
    Err.Raise vbObjectError + errIterateFailed,
mstrModuleName, _
        LoadResString(errIterateFailed)

End Function

Public Property Get LastIterator() As cRunItDetails

    Set LastIterator = mcLastIterator

End Property
Public Property Set LastIterator(vdata As
cRunItDetails)

    Set mcLastIterator = vdata

End Property

Public Property Get TasksRunning() As Integer

    TasksRunning = mintRunning

End Property

Public Property Let TasksRunning(ByVal vdata As
Integer)

    mintRunning = vdata

End Property

Public Property Get TasksComplete() As Integer

    TasksComplete = mintComplete

End Property
Public Property Let TasksComplete(ByVal vdata As
Integer)

    mintComplete = vdata

End Property
Public Property Get StepId() As Long

    StepId = mlngStepId

End Property
Public Property Let StepId(ByVal vdata As Long)

    mlngStepId = vdata

End Property
```

cSubSteps.cls

```
VERSION 1.0 CLASS
BEGIN
  MultiUse = -1  'True
END
Attribute VB_Name = "cSubSteps"
Attribute VB_GlobalNameSpace = False
Attribute VB_Creatable = True
Attribute VB_PredeclaredId = False
Attribute VB_Exposed = False
'  FILE:        cSubSteps.cls
'               Microsoft TPC-H Kit Ver. 1.00
'               Copyright Microsoft, 1999
'               All Rights Reserved
'
'
'  PURPOSE:     This module provides a type-safe
wrapper around cVector to
'               implement a collection of cSubStep
objects.
'  Contact:     Reshma Tharamal
(reshmat@microsoft.com)
'
Option Explicit

Private mcSubSteps As cVector

Public Sub Add(ByVal objItem As cSubStep)

    mcSubSteps.Add objItem

End Sub


Public Sub Clear()

    mcSubSteps.Clear

End Sub


Public Function Count() As Long

    Count = mcSubSteps.Count

End Function


Public Function Delete(ByVal lngDelete As Long) As
cSubStep

    Set Delete = mcSubSteps.Delete(lngDelete)

End Function


Public Property Get Item(ByVal Position As Long) As
cSubStep
Attribute Item.VB_UserMemId = 0
End Property
```


© 2006 Hewlett-Packard Company. All rights reserved.

```
    Set Item = mcSubSteps.Item(Position)

End Property

Private Sub Class_Initialize()

    Set mcSubSteps = New cVector

End Sub

Private Sub Class_Terminate()

    Set mcSubSteps = Nothing

End Sub
```

cTermProcess.cls

```
VERSION 1.0 CLASS
BEGIN
  MultiUse = -1  'True
END
Attribute VB_Name = "cTermProcess"
Attribute VB_GlobalNameSpace = False
Attribute VB_Creatable = True
Attribute VB_PredeclaredId = False
Attribute VB_Exposed = False
'  FILE:        cTermProcess.cls
'               Microsoft TPC-H Kit Ver. 1.00
'               Copyright Microsoft, 1999
'               All Rights Reserved
'
'
'  PURPOSE:     This module raises an event if a
completed step exists.
'  Contact:     Reshma Tharamal
(reshmat@microsoft.com)
'
Option Explicit

Private WithEvents moTimer As cTimerSM
Attribute moTimer.VB_VarHelpID = -1
Private bTermProcessExists As Boolean
Public Event TermProcessExists()

Public Sub ProcessTerminated()

    bTermProcessExists = True
    moTimer.Enabled = True

End Sub

Private Sub Class_Initialize()

    bTermProcessExists = False
    Set moTimer = New cTimerSM
    moTimer.Enabled = False

End Sub

Private Sub Class_Terminate()

    Set moTimer = Nothing

End Sub

Private Sub moTimer_Timer()

    On Error GoTo moTimer_TimerErr

    If bTermProcessExists Then
        RaiseEvent TermProcessExists
    End If

    moTimer.Enabled = False
    bTermProcessExists = False

    Exit Sub

moTimer_TimerErr:
    LogErrors Errors

End Sub
```

cTermStep.cls

```
VERSION 1.0 CLASS
BEGIN
  MultiUse = -1  'True
END
Attribute VB_Name = "cTermStep"
Attribute VB_GlobalNameSpace = False
Attribute VB_Creatable = True
Attribute VB_PredeclaredId = False
Attribute VB_Exposed = False
'  FILE:        cTermStep.cls
'               Microsoft TPC-H Kit Ver. 1.00
'               Copyright Microsoft, 1999
'               All Rights Reserved
'
'
'  PURPOSE:     This module encapsulates the
properties of steps that
'               have completed execution such as
status and time of completion.
'  Contact:     Reshma Tharamal
(reshmat@microsoft.com)
'
Option Explicit

Public TimeComplete As Currency
Public Index As Long
Public InstanceId As Long
Public ExecutionStatus As InstanceStatus
```

cTermSteps.cls

```
VERSION 1.0 CLASS
BEGIN
  MultiUse = -1  'True
END
Attribute VB_Name = "cTermSteps"
Attribute VB_GlobalNameSpace = False
Attribute VB_Creatable = True
Attribute VB_PredeclaredId = False
Attribute VB_Exposed = False
'  FILE:        cTermSteps.cls
'               Microsoft TPC-H Kit Ver. 1.00
'               Copyright Microsoft, 1999
'               All Rights Reserved
'
'
'  PURPOSE:     This module provides a type-safe
wrapper around cVector to
'               implement a collection of cTermStep
objects. Raises an
'               event if a step that has completed
execution exists.
'  Contact:     Reshma Tharamal
(reshmat@microsoft.com)
'
Option Explicit

Private mcTermSteps As cVector
Private WithEvents moTimer As cTimerSM
Attribute moTimer.VB_VarHelpID = -1
Public Event TermStepExists(cStepDetails As
cTermStep)

Public Sub Add(ByVal citem As cTermStep)

    Call mcTermSteps.Add(citem)
    moTimer.Enabled = True

End Sub

Public Sub Clear()

    mcTermSteps.Clear

End Sub

Public Function Delete()

    Call mcTermSteps.Delete(0)
    ' Disable the timer if there are no more pending
events
    If mcTermSteps.Count = 0 Then moTimer.Enabled =
False

End Function

Public Property Get Item(ByVal Position As Long) As
cTermStep

    Set Item = mcTermSteps(Position)
```


© 2006 Hewlett-Packard Company. All rights reserved.

```
End Property

Public Function Count() As Long

    Count = mcTermSteps.Count

End Function

Private Sub Class_Initialize()

    Set mcTermSteps = New cVector

    Set moTimer = New cTimerSM
    moTimer.Enabled = False

End Sub

Private Sub Class_Terminate()

    Set mcTermSteps = Nothing
    Set moTimer = Nothing

End Sub

Private Sub moTimer_Timer()

    On Error GoTo moTimer_TimerErr

    If mcTermSteps.Count > 0 Then
        ' Since items are appended to the end of the
array
        RaiseEvent TermStepExists(mcTermSteps(0))
    Else
        moTimer.Enabled = False
    End If
    Exit Sub

moTimer_TimerErr:
    LogErrors Errors

End Sub
```

cTimerSM.cls

```
VERSION 1.0 CLASS
BEGIN
  MultiUse = -1  'True
END
Attribute VB_Name = "cTimerSM"
Attribute VB_GlobalNameSpace = False
Attribute VB_Creatable = True
Attribute VB_PredeclaredId = False
Attribute VB_Exposed = False
'  FILE:        cTimer.cls
'               Microsoft TPC-H Kit Ver. 1.00
'               Copyright Microsoft, 1999
'               All Rights Reserved
'
'
'  PURPOSE:     This module implements a timer.
'  Contact:     Reshma Tharamal
(reshmat@microsoft.com)
'

Option Explicit

Public Event Timer()

Private Const mnDefaultInterval As Long = 1

Private mnTimerID As Long
Private mnInterval As Long
Private mfEnabled As Boolean

Public Property Get Interval() As Long
    Interval = mnInterval
End Property
Public Property Let Interval(Value As Long)
    If mnInterval <> Value Then
        mnInterval = Value
        If mfEnabled Then
            SetInterval mnInterval, mnTimerID
        End If
    End If
End Property

Public Property Get Enabled() As Boolean
    Enabled = mfEnabled
End Property
Public Property Let Enabled(Value As Boolean)
    If mfEnabled <> Value Then
        If Value Then
            mnTimerID = StartTimer(mnInterval)
            If mnTimerID <> 0 Then
                mfEnabled = True
                'Storing Me in the global would add a
reference to Me, which
                '   would prevent Me from being
released, which in turn would
                '   prevent my Class_Terminate code
from running. To prevent
                '   this, I store a "soft reference"
- the collection holds a
                '   pointer to me without
incrementing my reference count.
                gcTimerObjects.Add ObjPtr(Me),
Str$(mnTimerID)
            End If
        Else
            StopTimer mnTimerID
            mfEnabled = False
            gcTimerObjects.Remove Str$(mnTimerID)
        End If
    End If
End Property

Private Sub Class_Initialize()
    If gcTimerObjects Is Nothing Then Set
gcTimerObjects = New Collection
    mnInterval = mnDefaultInterval
End Sub

Private Sub Class_Terminate()
    Enabled = False
End Sub

Friend Sub Tick()
    RaiseEvent Timer
End Sub
```

cVBErrorsSM.cls

```
VERSION 1.0 CLASS
BEGIN
  MultiUse = -1  'True
END
Attribute VB_Name = "cVBErrorsSM"
Attribute VB_GlobalNameSpace = False
Attribute VB_Creatable = True
Attribute VB_PredeclaredId = False
Attribute VB_Exposed = False
Attribute VB_Ext_KEY = "SavedWithClassBuilder" ,"Yes"
Attribute VB_Ext_KEY = "Top_Level" ,"Yes"
'  FILE:        cVBErrors.cls
'               Microsoft TPC-H Kit Ver. 1.00
'               Copyright Microsoft, 1999
'               All Rights Reserved
'
'
'  PURPOSE:     This module encapsulates the handling
of Visual Basic errors.
'               This module does not do any error
handling - any error handler
'               will erase the errors object!
'  Contact:     Reshma Tharamal
(reshmat@microsoft.com)
'
Option Explicit

' The Execute class exposes a method, WriteError
through which we can write to the
' error log that is currently being used by the
Execute object. Store a reference to
' Execute object locally.
Private mcExecObjRef As EXECUTEDLLLib.Execute
Public Sub WriteError(ByVal ErrorCode As
errErrorConstants, _
        Optional ByVal ErrorSource As String =
gstrEmptyString, _
        Optional ByVal OptArgs As String =
gstrEmptyString)

    Dim sError As String

    sError = "StepMaster Error:" & ErrorCode & vbCrLf
& LoadResString(ErrorCode) & vbCrLf

    If Not StringEmpty(ErrorSource) Then
        sError = sError & "(Source: " & ErrorSource &
")" & vbCrLf
    End If
    sError = sError & OptArgs

    Call LogMessage(sError)
```


© 2006 Hewlett-Packard Company. All rights reserved.

```
End Sub
Private Function InitErrorString() As String
    ' Initializes a string with all the properties of
the
    ' Err object

    Dim strError As String
    Dim errCode As Long

    If Err.Number = 0 Then
        InitErrorString = gstrEmptyString
    Else
    With Err
        If Err.Number > vbObjectError And Err.Number
< (vbObjectError + 65536) Then
            errCode = .Number - vbObjectError
        Else
            errCode = .Number
        End If
        strError = "Error #: " & errCode & vbCrLf
        strError = strError & "Description: " &
.Description & vbCrLf
        strError = strError & "Source: " & Err.Source
& vbCrLf
    End With

    Debug.Print strError
    InitErrorString = strError
    End If

End Function
Public Sub LogVBErrors()

    Dim strErr As String

    strErr = InitErrorString

    On Error GoTo LogVBErrorsErr

    If Not StringEmpty(strErr) Then
        ' Write an error using the WriteError method
of the Execute object.
        If Not mcExecObjRef Is Nothing Then
            mcExecObjRef.WriteError strErr
        Else
            WriteMessage strErr
        End If
    End If

    Err.Clear

    Exit Sub

LogVBErrorsErr:
    Call LogErrors(Errors)
    ' Since write to the error file for the step has
failed, write to the project log
    Call WriteMessage(strErr)

End Sub
Public Sub DisplayErrors()

    Dim strErr As String

    strErr = InitErrorString

    If Not StringEmpty(strErr) Then
        ' Display the error message
        MsgBox strErr
    End If

    Err.Clear

End Sub
Public Sub LogMessage(strMsg As String)

    On Error GoTo LogMessageErr

    ' Write an error using the WriteError method of
the Execute object.
    If Not mcExecObjRef Is Nothing Then
        mcExecObjRef.WriteError strMsg
    Else
        WriteMessage strMsg
    End If

    Exit Sub

LogMessageErr:
    Call LogErrors(Errors)
    ' Since write to the error file for the step has
failed, write to the project log
    Call WriteMessage(strMsg)

End Sub
Public Property Set ErrorFile(vdata As
EXECUTEDLLLib.Execute)

    Set mcExecObjRef = vdata

End Property
Private Sub Class_Terminate()

    Set mcExecObjRef = Nothing

End Sub
```

cVector.cls

```
VERSION 1.0 CLASS
BEGIN
  MultiUse = -1  'True
END
Attribute VB_Name = "cVector"
Attribute VB_GlobalNameSpace = False
Attribute VB_Creatable = True
Attribute VB_PredeclaredId = False
Attribute VB_Exposed = False
'  FILE:        cVector.cls
'               Microsoft TPC-H Kit Ver. 1.00
'               Copyright Microsoft, 1999
'               All Rights Reserved
'
'  PURPOSE:     This class implements an array of
objects.
'  Contact:     Reshma Tharamal
(reshmat@microsoft.com)
'
Option Explicit

' Used to indicate the source module name when errors
' are raised by this class
Private mstrSource As String
Private Const mstrModuleName As String = "cVector."

' Array counter
Private mlngCount As Long
Private mcarrItems() As Object

Public Sub Add(ByVal objItem As Object)
    ' Adds the passed in Object variable to the array

    On Error GoTo AddErr

    ReDim Preserve mcarrItems(mlngCount)

    ' Set the newly added element in the array to the
    ' passed in variable
    Set mcarrItems(mlngCount) = objItem
    mlngCount = mlngCount + 1

    Exit Sub

AddErr:
    LogErrors Errors
    gstrSource = mstrModuleName & "Add"
    On Error GoTo 0
    Err.Raise vbObjectError + errLoadInArrayFailed, _
            mstrSource, _
            LoadResString(errLoadInArrayFailed)

End Sub
Public Sub Clear()

    ' Clear the array
    ReDim mcarrItems(0)
    mlngCount = 0

End Sub

Public Function Delete(ByVal lngDelete As Long) As
Object

    Dim lngIndex As Long

    On Error GoTo DeleteErr

    If lngDelete < (mlngCount - 1) Then

        ' We want to maintain the order of all items
in the
        ' array - so move all remaining elements in
the array
        ' up by 1
        For lngIndex = lngDelete To mlngCount - 2
            MoveDown lngIndex
```


© 2006 Hewlett-Packard Company. All rights reserved.

```
        Next lngIndex

    End If

    ' Return the deleted node
    Set Delete = mcarrItems(mlngCount - 1)

    ' Delete the last Node from the array
    mlngCount = mlngCount - 1
    If mlngCount > 0 Then
        ReDim Preserve mcarrItems(0 To mlngCount - 1)
    Else
        ReDim mcarrItems(0)
    End If

    Exit Function

DeleteErr:
    LogErrors Errors
    mstrSource = mstrModuleName & "Delete"
    On Error GoTo 0
    Err.Raise vbObjectError +
errDeleteArrayElementFailed, _
            mstrSource, _

LoadResString(errDeleteArrayElementFailed)

End Function
Public Property Get Item(ByVal Position As Long) As
Object
Attribute Item.VB_UserMemId = 0

    ' Returns the element at the passed in position
in the array
    If Position >= 0 And Position < mlngCount Then
        Set Item = mcarrItems(Position)
    Else
        On Error GoTo 0
        Err.Raise vbObjectError +
errItemDoesNotExist, mstrSource, _
            LoadResString(errItemDoesNotExist)
    End If

End Property
Public Property Set Item(ByVal Position As Long, _
        ByVal Value As Object)

    ' Returns the element at the passed in position
in the array
    If Position >= 0 Then
        ' If the passed in position is outside the
array
        ' bounds, then resize the array
        If Position >= mlngCount Then
            ReDim Preserve mcarrItems(Position)
            mlngCount = Position + 1
        End If

        ' Set the newly added element in the array to
the
        ' passed in variable
        Set mcarrItems(Position) = Value
    Else
        On Error GoTo 0
        Err.Raise vbObjectError +
errItemDoesNotExist, mstrSource, _
            LoadResString(errItemDoesNotExist)
    End If

End Property
Public Sub MoveUp(ByVal Position As Long)
    ' Moves the element at the passed in position up
by 1

    Dim cTemp As Object

    If Position > 0 And Position < mlngCount Then
        Set cTemp = mcarrItems(Position)

        Set mcarrItems(Position) =
mcarrItems(Position - 1)
        Set mcarrItems(Position - 1) = cTemp
    End If

End Sub
Public Sub MoveDown(ByVal Position As Long)
    ' Moves the element at the passed in position
down by 1

    Dim cTemp As Object

    If Position >= 0 And Position < mlngCount - 1
Then
        Set cTemp = mcarrItems(Position)

        Set mcarrItems(Position) =
mcarrItems(Position + 1)
        Set mcarrItems(Position + 1) = cTemp
    End If

End Sub

Public Function Count() As Long

    Count = mlngCount

End Function


Private Sub Class_Initialize()

    mlngCount = 0

End Sub


Private Sub Class_Terminate()

    Call Clear

End Sub
```

cVectorLng.cls

```
VERSION 1.0 CLASS
BEGIN
  MultiUse = -1  'True
END
Attribute VB_Name = "cVectorLng"
Attribute VB_GlobalNameSpace = False
Attribute VB_Creatable = True
Attribute VB_PredeclaredId = False
Attribute VB_Exposed = False
'  FILE:        cVectorLng.cls
'               Microsoft TPC-H Kit Ver. 1.00
'               Copyright Microsoft, 1999
'               All Rights Reserved
'
'
'  PURPOSE:     This class implements an array of
longs.
'  Contact:     Reshma Tharamal
(reshmat@microsoft.com)
'
Option Explicit

' Used to indicate the source module name when errors
' are raised by this class
Private mstrSource As String
Private Const mstrModuleName As String =
"cVectorLng."

' Array counter
Private mlngCount As Long
Private mcarrItems() As Long

Public Sub Add(ByVal lngItem As Long)
    ' Adds the passed in long variable to the array

    On Error GoTo AddErr

    ReDim Preserve mcarrItems(mlngCount)

    ' Set the newly added element in the array to the
    ' passed in variable
    mcarrItems(mlngCount) = lngItem
    mlngCount = mlngCount + 1

    Exit Sub

AddErr:
    LogErrors Errors
    gstrSource = mstrModuleName & "Add"
    On Error GoTo 0
    Err.Raise vbObjectError + errLoadInArrayFailed, _
            mstrSource, _
            LoadResString(errLoadInArrayFailed)

End Sub
Public Sub Clear()

    ' Clear the array
    ReDim mcarrItems(0)

End Sub
```


© 2006 Hewlett-Packard Company. All rights reserved.

```
Public Sub Delete(Optional ByVal Position As Long = -
1, _
        Optional ByVal Item As Long = -1)
    ' The user can opt to delete either a specific
item in
    ' the list or the item at a specified position.
If no
    ' parameters are passed in, we delete the element
at
    ' position 0!

    Dim lngDelete As Long
    Dim lngIndex As Long

    On Error GoTo DeleteErr

    If Position = -1 Then
        ' Since we can never store an element at
position -1,
        ' we can be sure that the user is trying to
delete
        ' a given item
        lngDelete = Find(Item)
    Else
        lngDelete = Position
    End If

    If lngDelete < (mlngCount - 1) Then

        ' We want to maintain the order of all items
in the
        ' array - so move all remaining elements in
the array
        ' up by 1
        For lngIndex = lngDelete To mlngCount - 2
            MoveDown lngIndex
        Next lngIndex

    End If

    ' Delete the last Node from the array
    mlngCount = mlngCount - 1
    If mlngCount > 0 Then
        ReDim Preserve mcarrItems(0 To mlngCount - 1)
    Else
        ReDim mcarrItems(0)
    End If

    Exit Sub

DeleteErr:
    LogErrors Errors
    mstrSource = mstrModuleName & "Delete"
    On Error GoTo 0
    Err.Raise vbObjectError +
errDeleteArrayElementFailed, _
            mstrSource, _

LoadResString(errDeleteArrayElementFailed)

End Sub
Public Function Find(ByVal Item As Long) As Long

    ' Returns the position at which the passed in
value occurs
    ' in the array

    Dim lngIndex As Long

    On Error GoTo FindErr

    ' Find the element in the array to be deleted
    For lngIndex = 0 To mlngCount - 1

        If mcarrItems(lngIndex) = Item Then
            Find = lngIndex
            Exit Function
        End If

    Next lngIndex

    Find = -1

    Exit Function

FindErr:
    LogErrors Errors
    mstrSource = mstrModuleName & "Find"
    On Error GoTo 0
    Err.Raise vbObjectError + errItemNotFound,
mstrSource, _
        LoadResString(errItemNotFound)

End Function
Public Property Get Item(ByVal Position As Long) As
Long
Attribute Item.VB_UserMemId = 0

    ' Returns the element at the passed in position
in the array
    If Position >= 0 And Position < mlngCount Then
        Item = mcarrItems(Position)
    Else
        On Error GoTo 0
        Err.Raise vbObjectError +
errItemDoesNotExist, mstrSource, _
            LoadResString(errItemDoesNotExist)
    End If

End Property
Public Property Let Item(ByVal Position As Long, _
        ByVal Value As Long)

    ' Returns the element at the passed in position
in the array
    If Position >= 0 Then
        ' If the passed in position is outside the
array
        ' bounds, then resize the array
        If Position >= mlngCount Then
            ReDim Preserve mcarrItems(Position)
            mlngCount = Position + 1
        End If

        ' Set the newly added element in the array to
the
        ' passed in variable
        mcarrItems(Position) = Value
    Else
        On Error GoTo 0
        Err.Raise vbObjectError +
errItemDoesNotExist, mstrSource, _
            LoadResString(errItemDoesNotExist)
    End If

End Property
Public Sub MoveUp(ByVal Position As Long)
    ' Moves the element at the passed in position up
by 1

    Dim lngTemp As Long

    If Position > 0 And Position < mlngCount Then
        lngTemp = mcarrItems(Position)

        mcarrItems(Position) = mcarrItems(Position -
1)
        mcarrItems(Position - 1) = lngTemp
    End If

End Sub
Public Sub MoveDown(ByVal Position As Long)
    ' Moves the element at the passed in position
down by 1

    Dim lngTemp As Long

    If Position >= 0 And Position < mlngCount - 1
Then
        lngTemp = mcarrItems(Position)

        mcarrItems(Position) = mcarrItems(Position +
1)
        mcarrItems(Position + 1) = lngTemp
    End If

End Sub

Public Function Count() As Long

    Count = mlngCount

End Function


Private Sub Class_Initialize()

    mlngCount = 0

End Sub


Private Sub Class_Terminate()

    Call Clear

End Sub
```


© 2006 Hewlett-Packard Company. All rights reserved.

cVectorStr.cls

```
VERSION 1.0 CLASS
BEGIN
  MultiUse = -1  'True
END
Attribute VB_Name = "cVectorStr"
Attribute VB_GlobalNameSpace = False
Attribute VB_Creatable = True
Attribute VB_PredeclaredId = False
Attribute VB_Exposed = False
'  FILE:        cVectorStr.cls
'               Microsoft TPC-H Kit Ver. 1.00
'               Copyright Microsoft, 1999
'               All Rights Reserved
'
'
'  PURPOSE:     This class implements an array of
strings.
'  Contact:     Reshma Tharamal
(reshmat@microsoft.com)
'
Option Explicit

' Used to indicate the source module name when errors
' are raised by this class
Private mstrSource As String
Private Const mstrModuleName As String =
"cVectorStr."

' Array counter
Private mlngCount As Long
Private mcarrItems() As String

Public Sub Add(ByVal strItem As String)
    ' Adds the passed in string variable to the array

    On Error GoTo AddErr

    ReDim Preserve mcarrItems(mlngCount)

    ' Set the newly added element in the array to the
    ' passed in variable
    mcarrItems(mlngCount) = strItem
    mlngCount = mlngCount + 1

    Exit Sub

AddErr:
    Call LogErrors(Errors)
    gstrSource = mstrModuleName & "Add"
    On Error GoTo 0
    Err.Raise vbObjectError + errLoadInArrayFailed, _
            mstrSource, _
            LoadResString(errLoadInArrayFailed)

End Sub
Public Sub Clear()

    ' Clear the array
    ReDim mcarrItems(0)

End Sub

Public Sub Delete(Optional ByVal Position As Long = -
1, _
        Optional ByVal Item As String = -1)
    ' The user can opt to delete either a specific
item in
    ' the list or the item at a specified position.
If no
    ' parameters are passed in, we delete the element
at
    ' position 0!

    Dim lngDelete As Long
    Dim lngIndex As Long

    On Error GoTo DeleteErr
    mstrSource = mstrModuleName & "Delete"

    If Position = -1 Then
        ' Since we can never store an element at
position -1,
        ' we can be sure that the user is trying to
delete
        ' a given item
        lngDelete = Find(Item)
    Else
        lngDelete = Position
    End If

    If lngDelete < (mlngCount - 1) Then

        ' We want to maintain the order of all items
in the
        ' array - so move all remaining elements in
the array
        ' up by 1
        For lngIndex = lngDelete To mlngCount - 2
            MoveDown lngIndex
        Next lngIndex

    End If

    ' Delete the last Node from the array
    mlngCount = mlngCount - 1
    If mlngCount > 0 Then
        ReDim Preserve mcarrItems(0 To mlngCount - 1)
    Else
        ReDim mcarrItems(0)
    End If

    Exit Sub

DeleteErr:
    Call LogErrors(Errors)
    mstrSource = mstrModuleName & "Delete"
    On Error GoTo 0
    Err.Raise vbObjectError +
errDeleteArrayElementFailed, _
            mstrSource, _

LoadResString(errDeleteArrayElementFailed)

End Sub
Public Function Find(ByVal Item As String) As Long

    ' Returns the position at which the passed in
value occurs
    ' in the array

    Dim lngIndex As Long

    On Error GoTo FindErr
    mstrSource = mstrModuleName & "Find"

    ' Find the element in the array to be deleted
    For lngIndex = 0 To mlngCount - 1

        If mcarrItems(lngIndex) = Item Then
            Find = lngIndex
            Exit Function
        End If

    Next lngIndex

    Find = -1

    Exit Function

FindErr:
    Call LogErrors(Errors)
    mstrSource = mstrModuleName & "Find"
    On Error GoTo 0
    Err.Raise vbObjectError + errItemNotFound,
mstrSource, _
        LoadResString(errItemNotFound)

End Function
Public Property Get Item(ByVal Position As Long) As
String
Attribute Item.VB_UserMemId = 0

    ' Returns the element at the passed in position
in the array
    If Position >= 0 And Position < mlngCount Then
        Item = mcarrItems(Position)
    Else
        On Error GoTo 0
        Err.Raise vbObjectError +
errItemDoesNotExist, mstrSource, _
            LoadResString(errItemDoesNotExist)
    End If

End Property
Public Property Let Item(ByVal Position As Long, _
        ByVal Value As String)

    ' Returns the element at the passed in position
in the array
    If Position >= 0 Then
        ' If the passed in position is outside the
array
        ' bounds, then resize the array
        If Position >= mlngCount Then
            ReDim Preserve mcarrItems(Position)
            mlngCount = Position + 1
```


© 2006 Hewlett-Packard Company. All rights reserved.

```
        End If

        ' Set the newly added element in the array to
the
        ' passed in variable
        mcarrItems(Position) = Value
    Else
        On Error GoTo 0
        Err.Raise vbObjectError +
errItemDoesNotExist, mstrSource, _
            LoadResString(errItemDoesNotExist)
    End If

End Property
Public Sub MoveUp(ByVal Position As Long)
    ' Moves the element at the passed in position up
by 1

    Dim strTemp As String

    If Position > 0 And Position < mlngCount Then
        strTemp = mcarrItems(Position)

        mcarrItems(Position) = mcarrItems(Position -
1)
        mcarrItems(Position - 1) = strTemp
    End If

End Sub
Public Sub MoveDown(ByVal Position As Long)
    ' Moves the element at the passed in position
down by 1

    Dim strTemp As String

    If Position >= 0 And Position < mlngCount - 1
Then
        strTemp = mcarrItems(Position)

        mcarrItems(Position) = mcarrItems(Position +
1)
        mcarrItems(Position + 1) = strTemp
    End If

End Sub

Public Function Count() As Long

    Count = mlngCount

End Function


Private Sub Class_Initialize()

    mlngCount = 0

End Sub
Private Sub Class_Terminate()

    Call Clear

End Sub
```

cWorker.cls

```
VERSION 1.0 CLASS
BEGIN
  MultiUse = -1  'True
END
Attribute VB_Name = "cWorker"
Attribute VB_GlobalNameSpace = False
Attribute VB_Creatable = True
Attribute VB_PredeclaredId = False
Attribute VB_Exposed = False
'  FILE:        cWorker.cls
'               Microsoft TPC-H Kit Ver. 1.00
'               Copyright Microsoft, 1999
'               All Rights Reserved
'
'
'  PURPOSE:     Encapsulates the properties and
methods of a worker step.
'               Implements the cStep class - carries
out initializations
'               and validations that are specific to
worker steps.
'  Contact:     Reshma Tharamal
(reshmat@microsoft.com)
'
Option Explicit

Implements cStep

' Object variable to keep the step reference in
Private mcStep As cStep

' Used to indicate the source module name when errors
' are raised by this class
Private mstrSource As String
Private Const mstrModuleName As String = "cWorker."
Private Sub cStep_AddAllIterators()

    Call mcStep.AddAllIterators

End Sub

Private Property Let cStep_StartDir(ByVal RHS As
String)

    mcStep.StartDir = RHS

End Property

Private Property Get cStep_StartDir() As String

    cStep_StartDir = mcStep.StartDir

End Property

Private Property Set cStep_NodeDB(RHS As
DAO.Database)

    Set mcStep.NodeDB = RHS

End Property

Private Property Get cStep_NodeDB() As DAO.Database

    Set cStep_NodeDB = mcStep.NodeDB

End Property

Private Function cStep_IncVersionY() As String

    cStep_IncVersionY = mcStep.IncVersionY

End Function
Private Function cStep_IsNewVersion() As Boolean
    cStep_IsNewVersion = mcStep.IsNewVersion
End Function
Private Function cStep_OldVersionNo() As String
    cStep_OldVersionNo = mcStep.OldVersionNo
End Function

Private Function cStep_IncVersionX() As String

    cStep_IncVersionX = mcStep.IncVersionX

End Function
Private Sub cStep_UpdateIteratorVersion()

    Call mcStep.UpdateIteratorVersion

End Sub

Private Function cStep_IteratorCount() As Long

    cStep_IteratorCount = mcStep.IteratorCount

End Function

Private Sub cStep_UnloadIterators()

    Call mcStep.UnloadIterators

End Sub

Private Sub cStep_SaveIterators()

    Call mcStep.SaveIterators

End Sub
Private Property Get cStep_IteratorName() As String

    cStep_IteratorName = mcStep.IteratorName

End Property
Private Property Let cStep_IteratorName(ByVal RHS As
String)

    mcStep.IteratorName = RHS

End Property
```


© 2006 Hewlett-Packard Company. All rights reserved.

```
Private Sub cStep_LoadIterator(cItRecord As
cIterator)

    Call mcStep.LoadIterator(cItRecord)

End Sub
Private Sub cStep_DeleteIterator(cItRecord As
cIterator)

    Call mcStep.DeleteIterator(cItRecord)

End Sub

Private Sub cStep_InsertIterator(cItRecord As
cIterator)

    Call mcStep.InsertIterator(cItRecord)

End Sub
Private Function cStep_Iterators() As Variant

    cStep_Iterators = mcStep.Iterators

End Function
Private Sub cStep_ModifyIterator(cItRecord As
cIterator)

    Call mcStep.ModifyIterator(cItRecord)

End Sub
Private Sub cStep_RemoveIterator(cItRecord As
cIterator)

    Call mcStep.RemoveIterator(cItRecord)

End Sub
Private Sub cStep_UpdateIterator(cItRecord As
cIterator)

    Call mcStep.UpdateIterator(cItRecord)

End Sub
Private Sub cStep_AddIterator(cItRecord As cIterator)

    Call mcStep.AddIterator(cItRecord)

End Sub

Private Property Let cStep_Position(ByVal RHS As
Long)

    mcStep.Position = RHS

End Property

Private Property Get cStep_Position() As Long

    cStep_Position = mcStep.Position

End Property

Private Function cStep_Clone(Optional cCloneStep As
cStep) As cStep

    Dim cNewWorker As cWorker

    Set cNewWorker = New cWorker
    Set cStep_Clone = mcStep.Clone(cNewWorker)

End Function

Private Sub StepTextOrFileEntered()
    ' Checks if either the step text or the name of
the file containing
    ' the text has been entered
    ' If both of them are null or both of them are
not null,
    ' the worker step is invalid and an error is
raised
    If StringEmpty(mcStep.StepText) And
StringEmpty(mcStep.StepTextFile) Then
        ShowError errStepTextAndFileNull
        On Error GoTo 0
        Err.Raise vbObjectError +
errStepTextAndFileNull, _
             mstrSource,
LoadResString(errStepTextAndFileNull)
    End If

End Sub

Private Property Get cStep_IndOperation() As
Operation

    cStep_IndOperation = mcStep.IndOperation

End Property

Private Property Let cStep_IndOperation(ByVal RHS As
Operation)

    mcStep.IndOperation = RHS

End Property

Private Property Get cStep_NextStepId() As Long

    cStep_NextStepId = mcStep.NextStepId

End Property

Private Property Let cStep_OutputFile(ByVal RHS As
String)

    mcStep.OutputFile = RHS

End Property

Private Property Get cStep_OutputFile() As String

    cStep_OutputFile = mcStep.OutputFile

End Property

Private Property Let cStep_ErrorFile(ByVal RHS As
String)

    mcStep.ErrorFile = RHS

End Property

Private Property Get cStep_ErrorFile() As String

    cStep_ErrorFile = mcStep.ErrorFile

End Property
'Private Property Let cStep_LogFile(ByVal RHS As
String)
'
'    mcStep.LogFile = RHS
'
'End Property
'
'Private Property Get cStep_LogFile() As String
'
'    cStep_LogFile = mcStep.LogFile
'
'End Property

Private Property Let cStep_ArchivedFlag(ByVal RHS As
Boolean)

    mcStep.ArchivedFlag = RHS

End Property

Private Property Get cStep_ArchivedFlag() As Boolean

    cStep_ArchivedFlag = mcStep.ArchivedFlag

End Property

Private Sub Class_Initialize()

    ' Create the object
    Set mcStep = New cStep

    ' Initialize the object with valid values for a
Worker step
    ' The global flag should be the first field to be
initialized
    ' since subsequent validations might try to check
if the
    ' step being created is global
    mcStep.GlobalFlag = False
'    mcStep.GlobalRunMethod = gintNoOption
    mcStep.StepType = gintWorkerStep

End Sub
Private Sub Class_Terminate()

    ' Remove the step object
    Set mcStep = Nothing

End Sub
Private Sub cStep_Add()

    ' Call a private procedure to see if the step
text has been
```


© 2006 Hewlett-Packard Company. All rights reserved.

```
    ' entered - since a worker step actually executes
a step, entry
    ' of the text is mandatory
    Call StepTextOrFileEntered

    ' Call the Add method of the step class to carry
out the insert
    mcStep.Add

End Sub

Private Property Get cStep_ContinuationCriteria() As
ContinuationCriteria

    cStep_ContinuationCriteria =
mcStep.ContinuationCriteria

End Property

Private Property Let cStep_ContinuationCriteria(ByVal
RHS As ContinuationCriteria)

    ' The Continuation criteria must be non-null for
all worker steps.
    ' Check if the Continuation Criteria is valid
    Select Case RHS
        Case gintOnFailureAbortSiblings,
gintOnFailureCompleteSiblings, _
                gintOnFailureSkipSiblings,
gintOnFailureAbort, _
                gintOnFailureContinue,
gintOnFailureAsk
            mcStep.ContinuationCriteria = RHS

        Case Else
            On Error GoTo 0
            Err.Raise vbObjectError +
errContCriteriaInvalid, _
                      mstrModuleName,
LoadResString(errContCriteriaInvalid)
    End Select

End Property

Private Property Let cStep_DegreeParallelism(ByVal
RHS As String)

    mcStep.DegreeParallelism = RHS

End Property

Private Property Get cStep_DegreeParallelism() As
String

    cStep_DegreeParallelism =
mcStep.DegreeParallelism

End Property

Private Sub cStep_Delete()

    mcStep.Delete

End Sub

Private Property Get cStep_EnabledFlag() As Boolean

    cStep_EnabledFlag = mcStep.EnabledFlag

End Property

Private Property Let cStep_EnabledFlag(ByVal RHS As
Boolean)

    mcStep.EnabledFlag = RHS

End Property

Private Property Let cStep_ExecutionMechanism(ByVal
RHS As ExecutionMethod)

    On Error GoTo ExecutionMechanismErr
    mstrSource = mstrModuleName &
"cStep_ExecutionMechanism"

    Select Case RHS
        Case gintExecuteShell, gintExecuteODBC
            mcStep.ExecutionMechanism = RHS

        Case Else
            On Error GoTo 0
            Err.Raise vbObjectError +
errExecutionMechanismInvalid, _
                      mstrSource,
LoadResString(errExecutionMechanismInvalid)
    End Select

    Exit Property

ExecutionMechanismErr:
    LogErrors Errors
    mstrSource = mstrModuleName &
"cStep_ExecutionMechanism"
    On Error GoTo 0
    Err.Raise vbObjectError +
errExecutionMechanismLetFailed, _
        mstrSource,
LoadResString(errExecutionMechanismLetFailed)

End Property

Private Property Get cStep_ExecutionMechanism() As
ExecutionMethod

    cStep_ExecutionMechanism =
mcStep.ExecutionMechanism

End Property

Private Property Let cStep_FailureDetails(ByVal RHS
As String)

    mcStep.FailureDetails = RHS

End Property

Private Property Get cStep_FailureDetails() As String

    cStep_FailureDetails = mcStep.FailureDetails

End Property

Private Property Get cStep_GlobalFlag() As Boolean

    cStep_GlobalFlag = mcStep.GlobalFlag

End Property

Private Property Let cStep_GlobalFlag(ByVal RHS As
Boolean)

    ' Set the global flag to false - this flag is
initialized when
    ' an instance of the class is created. Just
making sure that
    ' nobody changes the value inadvertently
    mcStep.GlobalFlag = False

End Property
Private Sub cStep_Modify()

    ' Call a private procedure to see if the step
text has been
    ' entered - since a worker step actually executes
a step, entry
    ' of the text is mandatory
    Call StepTextOrFileEntered

    ' Call the Modify method of the step class to
carry out the update
    mcStep.Modify

End Sub

Private Property Let cStep_ParentStepId(ByVal RHS As
Long)

    mcStep.ParentStepId = RHS

End Property

Private Property Get cStep_ParentStepId() As Long

    cStep_ParentStepId = mcStep.ParentStepId

End Property

Private Property Let cStep_ParentVersionNo(ByVal RHS
As String)

    mcStep.ParentVersionNo = RHS

End Property

Private Property Get cStep_ParentVersionNo() As
String

    cStep_ParentVersionNo = mcStep.ParentVersionNo
```


© 2006 Hewlett-Packard Company. All rights reserved.

```
End Property

Private Property Let cStep_SequenceNo(ByVal RHS As
Integer)

    mcStep.SequenceNo = RHS

End Property

Private Property Get cStep_SequenceNo() As Integer

    cStep_SequenceNo = mcStep.SequenceNo

End Property

Private Property Let cStep_StepId(ByVal RHS As Long)

    mcStep.StepId = RHS

End Property

Private Property Get cStep_StepId() As Long

    cStep_StepId = mcStep.StepId

End Property


Private Property Let cStep_StepLabel(ByVal RHS As
String)

    mcStep.StepLabel = RHS

End Property

Private Property Get cStep_StepLabel() As String

    cStep_StepLabel = mcStep.StepLabel

End Property


Private Property Let cStep_StepLevel(ByVal RHS As
Integer)

    mcStep.StepLevel = RHS

End Property

Private Property Get cStep_StepLevel() As Integer

    cStep_StepLevel = mcStep.StepLevel

End Property

Private Property Let cStep_StepText(ByVal RHS As
String)

    mcStep.StepText = RHS

End Property

Private Property Get cStep_StepText() As String

    cStep_StepText = mcStep.StepText

End Property

Private Property Let cStep_StepTextFile(ByVal RHS As
String)

    mcStep.StepTextFile = RHS

End Property

Private Property Get cStep_StepTextFile() As String

    cStep_StepTextFile = mcStep.StepTextFile

End Property

Private Property Let cStep_StepType(RHS As
gintStepType)

    mcStep.StepType = gintWorkerStep

End Property

Private Property Get cStep_StepType() As gintStepType

    cStep_StepType = mcStep.StepType

End Property

Private Sub cStep_Validate()
    ' The validate routines for each of the steps
will
    ' carry out the specific validations for the type
and
    ' call the generic validation routine

    On Error GoTo cStep_ValidateErr

    ' Validations specific to worker steps

    ' Check if the step text or a file name has been
    ' specified
    Call StepTextOrFileEntered

    mcStep.Validate

    Exit Sub

cStep_ValidateErr:
    LogErrors Errors
    mstrSource = mstrModuleName & "cStep_Validate"
    On Error GoTo 0
    Err.Raise vbObjectError + errValidateFailed, _
            mstrSource, _
            LoadResString(errValidateFailed)
End Sub

Private Property Let cStep_VersionNo(ByVal RHS As
String)

    mcStep.VersionNo = RHS

End Property

Private Property Get cStep_VersionNo() As String

    cStep_VersionNo = mcStep.VersionNo

End Property

Private Property Let cStep_WorkspaceId(ByVal RHS As
Long)

    mcStep.WorkspaceId = RHS

End Property

Private Property Get cStep_WorkspaceId() As Long

    cStep_WorkspaceId = mcStep.WorkspaceId

End Property
```

cWorkspace.cls

```
VERSION 1.0 CLASS
BEGIN
  MultiUse = -1  'True
END
Attribute VB_Name = "cWorkspace"
Attribute VB_GlobalNameSpace = False
Attribute VB_Creatable = True
Attribute VB_PredeclaredId = False
Attribute VB_Exposed = False
'  FILE:        cWorkspace.cls
'               Microsoft TPC-H Kit Ver. 1.00
'               Copyright Microsoft, 1999
'               All Rights Reserved
'
'
'  PURPOSE:     Encapsulates the properties and
methods of a workspace.
'               Contains functions to insert, update
and delete
'               att_workspaces records from the
database.
'  Contact:     Reshma Tharamal
(reshmat@microsoft.com)
'
Option Explicit

' Local variable(s) to hold property value(s)
Private mlngWorkspaceId As Long
Private mstrWorkspaceName As String
Private mblnArchivedFlag As Boolean
Private mdbsStepMaster As Database

' Used to indicate the source module name when errors
' are raised by this class
Private mstrSource As String
```


© 2006 Hewlett-Packard Company. All rights reserved.

```
Private Const mstrModuleName As String =
"cWorkspace."

' The cSequence class is used to generate unique
workspace identifiers
Private mWorkspaceSeq As cSequence

' The StringSM class is used to carry out string
operations
Private mFieldValue As cStringSM

Public Function Clone() As cWorkspace

    ' Creates a copy of a given workspace

    Dim cCloneWsp As cWorkspace

    On Error GoTo CloneErr

    Set cCloneWsp = New cWorkspace

    ' Copy all the workspace properties to the newly
    ' created workspace
    cCloneWsp.WorkspaceId = mlngWorkspaceId
    cCloneWsp.WorkspaceName = mstrWorkspaceName
    cCloneWsp.ArchivedFlag = mblnArchivedFlag

    ' And set the return value to the newly created
workspace
    Set Clone = cCloneWsp

    Exit Function

CloneErr:
    LogErrors Errors
    mstrSource = mstrModuleName & "Clone"
    On Error GoTo 0
    Err.Raise vbObjectError + errCloneFailed, _
            mstrSource, LoadResString(errCloneFailed)

End Function

Public Property Let ArchivedFlag(ByVal vdata As
Boolean)

    mblnArchivedFlag = vdata

End Property

Public Property Get ArchivedFlag() As Boolean

    ArchivedFlag = mblnArchivedFlag

End Property

Public Property Set WorkDatabase(vdata As Database)

    Set mdbsStepMaster = vdata

End Property

Private Sub WorkspaceNameDuplicate()

    ' Check if the workspace name already exists in
the workspace

    Dim rstWorkspace As Recordset
    Dim strSql As String
    Dim qy As DAO.QueryDef

    On Error GoTo WorkspaceNameDuplicateErr
    mstrSource = mstrModuleName &
"WorkspaceNameDuplicate"

    ' Create a recordset to retrieve the count of
records
    ' having the same workspace name
    strSql = " Select count(*) as workspace_count " &
_
        " from att_workspaces " & _
        " where workspace_name = [w_name] " & _
        " and workspace_id <> [w_id] "
    Set qy =
mdbsStepMaster.CreateQueryDef(gstrEmptyString,
strSql)

    ' Call a procedure to assign the parameter values
    Call AssignParameters(qy)

    Set rstWorkspace =
qy.OpenRecordset(dbOpenForwardOnly)

'        mFieldValue.MakeStringFieldValid
(mstrWorkspaceName) & _
'        " and workspace_id <> " & _
'        Str(mlngWorkspaceId)
'
'    Set rstWorkspace = mdbsStepMaster.OpenRecordset(
_
'        strSQL, dbOpenForwardOnly)

    If rstWorkspace![workspace_count] > 0 Then
        rstWorkspace.Close
        qy.Close
        ShowError errDuplicateWorkspaceName
        On Error GoTo 0
        Err.Raise vbObjectError +
errDuplicateWorkspaceName, _
            mstrSource,
LoadResString(errDuplicateWorkspaceName)
    End If
    rstWorkspace.Close
    qy.Close

    Exit Sub

WorkspaceNameDuplicateErr:
    Call LogErrors(Errors)
    mstrSource = mstrModuleName &
"WorkspaceNameDuplicate"
    On Error GoTo 0
    Err.Raise vbObjectError +
errWorkspaceNameDuplicateFailed, _
        mstrSource,
LoadResString(errWorkspaceNameDuplicateFailed)

End Sub
Public Property Let WorkspaceName(vdata As String)

    On Error GoTo WorkspaceNameErr
    mstrSource = mstrModuleName & "WorkspaceName"

    If vdata = gstrEmptyString Then

        On Error GoTo 0
        ' Propogate this error back to the caller
        Err.Raise vbObjectError +
errWorkspaceNameMandatory, _
            mstrSource,
LoadResString(errWorkspaceNameMandatory)
    Else
        mstrWorkspaceName = vdata
    End If
    Exit Property

WorkspaceNameErr:
    LogErrors Errors
    mstrSource = mstrModuleName & "WorkspaceName"
    On Error GoTo 0
    Err.Raise vbObjectError +
errWorkspaceNameSetFailed, _
        mstrSource,
LoadResString(errWorkspaceNameSetFailed)

End Property

Public Property Let WorkspaceId(vdata As Long)

    On Error GoTo WorkspaceIdErr
    mstrSource = mstrModuleName & "WorkspaceId"

    If (vdata > 0) Then
        mlngWorkspaceId = vdata
    Else
        ' Propogate this error back to the caller
        On Error GoTo 0
        Err.Raise vbObjectError +
errWorkspaceIdInvalid, _
            mstrSource,
LoadResString(errWorkspaceIdInvalid)
    End If

    Exit Property

WorkspaceIdErr:
    LogErrors Errors
    mstrSource = mstrModuleName & "WorkspaceId"
    On Error GoTo 0
    Err.Raise vbObjectError +
errWorkspaceIdSetFailed, _
        mstrSource,
LoadResString(errWorkspaceIdSetFailed)

End Property

Public Sub AddWorkspace()

    Dim strInsert As String
    Dim qy As DAO.QueryDef
```


© 2006 Hewlett-Packard Company. All rights reserved.

```
    On Error GoTo AddWorkspaceErr

    ' Retrieve the next identifier using the sequence
class
    Set mWorkspaceSeq = New cSequence
    Set mWorkspaceSeq.IdDatabase = mdbsStepMaster
    mWorkspaceSeq.IdentifierColumn = FLD_ID_WORKSPACE
    mlngWorkspaceId = mWorkspaceSeq.Identifier
    Set mWorkspaceSeq = Nothing

    ' Call procedure to raise an error if the
Workspace name
    ' already exists in the db
    Call WorkspaceNameDuplicate

    ' A new record will have the archived_flag turned
off
    mblnArchivedFlag = False

    ' Create a temporary querydef object
    strInsert = "insert into att_workspaces " & _
            "( workspace_id, workspace_name, " & _
            " archived_flag ) " & _
            " values ( [w_id], [w_name], [archived] )
"
    Set qy =
mdbsStepMaster.CreateQueryDef(gstrEmptyString,
strInsert)

    ' Call a procedure to assign the parameter values
    Call AssignParameters(qy)

    qy.Execute dbFailOnError
    qy.Close

'    strInsert = "insert into att_workspaces " & _
'            "( workspace_id, workspace_name, " & _
'            " archived_flag ) " & _
'            " values ( " & _
'            Str(mlngWorkspaceId) & _
'            ", " &
mFieldValue.MakeStringFieldValid(mstrWorkspaceName) &
_
'            ", " & Str(mblnArchivedFlag) & _
'            " ) "
'    mdbsStepMaster.Execute strInsert, dbFailOnError
'
    Exit Sub

AddWorkspaceErr:

    Call LogErrors(Errors)
    mstrSource = mstrModuleName & "AddWorkspace"
    On Error GoTo 0
    Err.Raise vbObjectError +
errWorkspaceInsertFailed, _
        mstrSource,
LoadResString(errWorkspaceInsertFailed)

End Sub
Private Sub AssignParameters(qyExec As DAO.QueryDef)

    ' Assigns values to the parameters in the
querydef object
    ' The parameter names are cryptic to make them
different
    ' from the field names. When the parameter names
are
    ' the same as the field names, parameters in the
where
    ' clause do not get created.

    Dim prmParam As DAO.Parameter

    On Error GoTo AssignParametersErr
    mstrSource = mstrModuleName & "AssignParameters"

    For Each prmParam In qyExec.Parameters
        Select Case prmParam.Name
            Case "[w_id]"
                prmParam.Value = mlngWorkspaceId

            Case "[w_name]"
                prmParam.Value = mstrWorkspaceName

            Case "[archived]"
                prmParam.Value = mblnArchivedFlag

            Case Else
                ' Write the parameter name that is
faulty
                WriteError errInvalidParameter,
mstrSource, _
                        prmParam.Name
                On Error GoTo 0
                Err.Raise errInvalidParameter,
mstrSource, _

LoadResString(errInvalidParameter)
        End Select
    Next prmParam

    Exit Sub

AssignParametersErr:

    mstrSource = mstrModuleName & "AssignParameters"
    Call LogErrors(Errors)
    On Error GoTo 0
    Err.Raise vbObjectError +
errAssignParametersFailed, _
        mstrSource,
LoadResString(errAssignParametersFailed)

End Sub
Public Sub DeleteWorkspace()

    Dim strDelete As String
    Dim qy As DAO.QueryDef

    On Error GoTo DeleteWorkspaceErr

    strDelete = "delete from att_workspaces " & _
        " where workspace_id = [w_id]"

    Set qy =
mdbsStepMaster.CreateQueryDef(gstrEmptyString,
strDelete)

    ' Call a procedure to assign the parameter values
    Call AssignParameters(qy)

    qy.Execute dbFailOnError
    qy.Close

'    mdbsStepMaster.Execute strDelete, dbFailOnError
'        " where workspace_id = " & _
'        Str(mlngWorkspaceId)

    Exit Sub

DeleteWorkspaceErr:
    Call LogErrors(Errors)
    mstrSource = mstrModuleName & "DeleteWorkspace"
    On Error GoTo 0
    Err.Raise vbObjectError +
errWorkspaceDeleteFailed, _
        mstrSource,
LoadResString(errWorkspaceDeleteFailed)
End Sub

Public Sub ModifyWorkspace()

    Dim strUpdate As String
    Dim qy As DAO.QueryDef

    On Error GoTo ModifyWorkspaceErr

    ' Call procedure to raise an error if the
Workspace name
    ' already exists in the db
    Call WorkspaceNameDuplicate

    strUpdate = "update att_workspaces " & _
        " set workspace_name = [w_name] " & _
        ", archived_flag = [archived] " & _
        " where workspace_id = [w_id] "
    Set qy =
mdbsStepMaster.CreateQueryDef(gstrEmptyString,
strUpdate)

    ' Call a procedure to assign the parameter values
    Call AssignParameters(qy)

    qy.Execute dbFailOnError
    qy.Close

'    strUpdate = "update att_workspaces " & _
'        " set workspace_name = " & _
'
mFieldValue.MakeStringFieldValid(mstrWorkspaceName) &
_
'        ", archived_flag = " & _
'        Str(mblnArchivedFlag) & _
'        " where workspace_id = " & _
'        Str(mlngWorkspaceId)
'
'    mdbsStepMaster.Execute strUpdate, dbFailOnError
```


© 2006 Hewlett-Packard Company. All rights reserved.

```
'
    Exit Sub

ModifyWorkspaceErr:

    Call LogErrors(Errors)
    mstrSource = mstrModuleName & "ModifyWorkspace"
    On Error GoTo 0
    Err.Raise vbObjectError +
errWorkspaceUpdateFailed, _
        mstrSource,
LoadResString(errWorkspaceUpdateFailed)

End Sub
Public Property Get WorkspaceName() As String

    WorkspaceName = mstrWorkspaceName

End Property

Public Property Get WorkspaceId() As Long

    WorkspaceId = mlngWorkspaceId

End Property

Private Sub Class_Initialize()

    ' Each function will append it's own name to this
    ' variable
    mstrSource = "cWorkspace."

    Set mFieldValue = New cStringSM

End Sub

Private Sub Class_Terminate()

    Set mdbsStepMaster = Nothing
    Set mFieldValue = Nothing

End Sub
```

DatabaseSM.bas

```
Attribute VB_Name = "DatabaseSM"
'  FILE:       DatabaseSM.bas
'              Microsoft TPC-H Kit Ver. 1.00
'              Copyright Microsoft, 1999
'              All Rights Reserved
'
'
'  PURPOSE:    Contains all the database
initialization/cleanup
'              procedures for the project. Also
contains upgrade
'              database upgrade functions.
'  Contact:    Reshma Tharamal
(reshmat@microsoft.com)
'
' This module is called DatabaseSM, since Database is
a standard
' Visual Basic object and we want to avoid any
confusion with it.

Option Explicit

Public wrkJet As Workspace
Public dbsAttTool As Database
Public gblnDbOpen As Boolean
Public gRunEngine As rdoEngine

' Used to indicate the source module name when errors
' are raised by this module
Private Const mstrModuleName As String =
"DatabaseSM."
Public Const gsDefDBFileExt As String = ".stp"
Private Const msDefDBFile As String = "\SMData" &
gsDefDBFileExt

Private Const merrFileNotFound As Integer = 3024
Private Const merrDaoTableMissing As Integer = 3078

Private Const STEPMASTER_SETTINGS_VAL_NAME_DBFILE As
String = "WorkspaceFile"

Public Const DEF_NO_COUNT_DISPLAY          As Boolean
= False
Public Const DEF_NO_EXECUTE                As Boolean
= False
Public Const DEF_PARSE_QUERY_ONLY          As Boolean
= False
Public Const DEF_ANSI_QUOTED_IDENTIFIERS   As Boolean
= False
Public Const DEF_ANSI_NULLS                As Boolean
= True
Public Const DEF_SHOW_QUERY_PLAN           As Boolean
= False
Public Const DEF_SHOW_STATS_TIME           As Boolean
= False
Public Const DEF_SHOW_STATS_IO             As Boolean
= False
Public Const DEF_PARSE_ODBC_MSG_PREFIXES   As Boolean
= True
Public Const DEF_ROW_COUNT                 As Long =
0
Public Const DEF_TSQL_BATCH_SEPARATOR      As String
= "GO"
Public Const DEF_QUERY_TIME_OUT            As Long =
0
Public Const DEF_SERVER_LANGUAGE           As String
= "(Default)"
Public Const DEF_CHARACTER_TRANSLATION     As Boolean
= True
Public Const DEF_REGIONAL_SETTINGS         As Boolean
= False

Public Const PARAM_DEFAULT_DIR             As String
= "DEFAULT_DIR"
Public Const PARAM_DEFAULT_DIR_DESC        As String
= "Default destination directory " & _
                  "for all output and error files. If
it is blank, the StepMaster installation directory
will be used."

Public Const PARAM_RUN_ID                  As String
= "RUN_ID"
Public Const PARAM_RUN_ID_DESC             As String
= "The run identifier for a run. " & _
                  "Any modifications will be
overwritten before each run."

Public Const PARAM_OUTPUT_DIR              As String
= "OUTPUT_DIR"
Public Const PARAM_OUTPUT_DIR_DESC         As String
= "The output directory for a run. " & _
                  "Any modifications will be
overwritten before each run."

Public Const CONNECTION_STRINGS_TO_NAME_SUFFIX As
String = "_NAME"

Private Const TBL_RUN_STEP_HDR As String =
"run_header"
Private Const TBL_RUN_STEP_DTLS As String =
"run_step_details"
Public Const TBL_CONNECTION_DTLS As String =
"connection_dtls"
Public Const TBL_CONNECTION_STRINGS As String =
"workspace_connections"
Public Const TBL_STEPS As String = "att_steps"

Public Const FLD_ID_CONN_NAME As String =
"connection_name_id"
Public Const FLD_ID_WORKSPACE As String =
"workspace_id"
Public Const FLD_ID_STEP As String = "step_id"
Public Const FLD_ID_PARAMETER As String =
"parameter_id"

Public Const FLD_CONN_DTL_CONNECTION_NAME As String =
"connection_name"
Public Const FLD_CONN_DTL_CONNECTION_STRING As String
= "connection_string_name"
Public Const FLD_CONN_DTL_CONNECTION_TYPE As String =
"connection_type"

Public Const FLD_CONN_STR_CONNECTION_NAME As String =
"connection_name"

Public Const FLD_STEPS_EXEC_MECHANISM As String =
"execution_mechanism"
Public Const FLD_STEPS_EXEC_DTL As String =
"start_directory"
Public Const FLD_STEPS_VERSION_NO As String =
"version_no"

Public Const DATA_TYPE_CURRENCY As String =
"CURRENCY"
Public Const DATA_TYPE_LONG As String = "Long"
Public Const DATA_TYPE_INTEGER As String = "INTEGER"
Public Const DATA_TYPE_TEXT255 As String =
"Text(255)"
```


© 2006 Hewlett-Packard Company. All rights reserved.

```
Private Sub InsertBuiltInParameter(dbFile As
Database, sParamName As String, _
        sParamValue As String, sParamDesc As String)

    Dim sBuf As String
    Dim cTempStr As New cStringSM
    Dim lId As Long
    Dim rTemp As DAO.Recordset
    Dim rParam As DAO.Recordset
    Dim cTempSeq As cSequence

    ' Create the passed in built-in parameter, for
each workspace in the db
    Set cTempSeq = New cSequence
    Set cTempSeq.IdDatabase = dbFile
    cTempSeq.IdentifierColumn = FLD_ID_PARAMETER

    sBuf = "select * from att_workspaces "
    Set rTemp = dbFile.OpenRecordset(sBuf,
dbOpenSnapshot)
    If rTemp.RecordCount <> 0 Then
        rTemp.MoveFirst

        While Not rTemp.EOF
            sBuf = "select * from
workspace_parameters " & _
                    " where workspace_id = " &
Str(rTemp!workspace_id) & _
                    " and parameter_name = " &
cTempStr.MakeStringFieldValid(sParamName)
            Set rParam = dbFile.OpenRecordset(sBuf,
dbOpenSnapshot)
            If rParam.RecordCount <> 0 Then
                rParam.MoveFirst
                ' Since the parameter already exists,
change it to a built-in type
                sBuf = "update workspace_parameters "
& _
                        " set parameter_type = " &
CStr(gintParameterBuiltIn) & _
                        ", description = " &
cTempStr.MakeStringFieldValid(sParamDesc) & _
                        " where workspace_id = " &
Str(rTemp!workspace_id) & _
                        " and parameter_id = " &
Str(rParam!parameter_id)
            Else
                ' Else, insert a parameter record
                lId = cTempSeq.Identifier
                sBuf = "insert into
workspace_parameters " & _
                        "( workspace_id,
parameter_id, " & _
                        " parameter_name,
parameter_value, " & _
                        " description, parameter_type
) " & _
                        " values ( " & _
                        Str(rTemp!workspace_id) & ",
" & Str(lId) & ", " & _

cTempStr.MakeStringFieldValid(sParamName) & ", " & _

cTempStr.MakeStringFieldValid(sParamValue) & ", " & _

cTempStr.MakeStringFieldValid(sParamDesc) & ", " & _
                        CStr(gintParameterBuiltIn) &
_
                        " ) "
            End If
            dbFile.Execute sBuf, dbFailOnError
            rParam.Close

            rTemp.MoveNext
        Wend
    End If
    rTemp.Close

End Sub
Public Sub InitRunEngine()

    Set gRunEngine = New rdoEngine
    gRunEngine.rdoDefaultCursorDriver = rdUseServer

End Sub

Public Function DefaultDBFile() As String
    DefaultDBFile = GetSetting(App.Title, "Settings",
STEPMASTER_SETTINGS_VAL_NAME_DBFILE, App.Path &
msDefDBFile)
End Function

Public Sub CloseDatabase()

    Dim dbsInstance As Database
    Dim recInstance As Recordset

    On Error GoTo CloseDatabaseErr

    ' Close all open recordsets and databases in the
workspace
    For Each dbsInstance In wrkJet.Databases

        For Each recInstance In dbsAttTool.Recordsets
            recInstance.Close
        Next recInstance
        dbsInstance.Close

    Next dbsInstance

    Set dbsAttTool = Nothing

    gblnDbOpen = False
    wrkJet.Close

    Exit Sub

CloseDatabaseErr:

    Call LogErrors(Errors)
    Resume Next

End Sub

Private Function NoDbChanges(sVerTo As String,
sVerFrom As String) As Boolean

    If sVerTo = gsVersion242 And sVerFrom =
gsVersion241 Then
        NoDbChanges = True
    ElseIf sVerTo = gsVersion242 And sVerFrom =
gsVersion24 Then
        NoDbChanges = True
    ElseIf sVerTo = gsVersion253 And sVerFrom =
gsVersion251 Then
        NoDbChanges = True
    ElseIf sVerTo = gsVersion255 And sVerFrom =
gsVersion251 Then
        NoDbChanges = True
    Else
        NoDbChanges = False
    End If

End Function

Public Function SMOpenDatabase(Optional strDbName As
String = gstrEmptyString) As Boolean
    Dim sVersion As String
    Dim bOpeningDb As Boolean ' This flag is used to
check if OpenDatabase failed

    On Error GoTo OpenDatabaseErr

    bOpeningDb = False
    SMOpenDatabase = False

    ' Create Microsoft Jet Workspace object.
    If Not gblnDbOpen Then
        Set wrkJet =
CreateWorkspace("att_tool_workspace_setup", "admin",
gstrEmptyString, dbUseJet)
    End If

    ' Prompt the user for the database file if it is
not passed in
    If StringEmpty(strDbName) Then
        strDbName = BrowseDBFile
        If StringEmpty(strDbName) Then
            Exit Function
        End If
    End If

    Do
        If gblnDbOpen Then
#If Not RUN_ONLY Then
            CloseOpenWorkspaces
#End If
            Set wrkJet =
CreateWorkspace("att_tool_workspace_setup", "admin",
gstrEmptyString, dbUseJet)
        End If

        ' Toggle the bOpeningDb flag around the
OpenDatabase method - the value
        ' of this flag will be checked by the error
handler to determine if it is
        ' the OpenDatabase that failed.
```


© 2006 Hewlett-Packard Company. All rights reserved.

```
        BugMessage "DB File: " & strDbName

        bOpeningDb = True
        ' Open the database for exclusive use
        Set dbsAttTool =
wrkJet.OpenDatabase(strDbName, Options:=True)
        bOpeningDb = False

        If dbsAttTool Is Nothing Then
            ' If the file is not present in the
directory, display
            ' an error and ask the user to enter a
new path
            Call ShowError(errOpenDbFailed,
OptArgs:=strDbName)

            strDbName = BrowseDBFile
        Else
            sVersion = DBVersion(dbsAttTool)

            ' Make sure the application and db
version numbers match
            If sVersion = gsVersion Then
                Call InitializeData(strDbName)
                gblnDbOpen = True
                SMOpenDatabase = True
            Else
                If UpgradeDb(wrkJet, dbsAttTool,
gsVersion, sVersion) Then
                    Call InitializeData(strDbName)
                    gblnDbOpen = True
                    SMOpenDatabase = True
                Else
                    dbsAttTool.Close
                    Set dbsAttTool = Nothing

                    ShowError errVersionMismatch, _
                            OptArgs:=" Please install
Version '" & gsVersion & "' of the workspace
definition file."
                    strDbName = BrowseDBFile
                End If
            End If
        End If
    Loop While gblnDbOpen = False And Not
StringEmpty(strDbName)

    Exit Function

OpenDatabaseErr:
    Call DisplayErrors(Errors)

    ' If the OpenDatabase failed, continue
    If bOpeningDb Then
        Resume Next
    End If

    Call ShowError(errOpenDbFailed,
OptArgs:=strDbName)

End Function
Private Sub InitializeData(sDb As String)

    Set gcParameters = New cArrParameters
    Set gcParameters.ParamDatabase = dbsAttTool

    Set gcSteps = New cArrSteps
    Set gcSteps.StepDB = dbsAttTool

    Set gcConstraints = New cArrConstraints
    Set gcConstraints.ConstraintDB = dbsAttTool

    Set gcConnections = New cConnections
    Set gcConnections.ConnDb = dbsAttTool

    Set gcConnDtls = New cConnDtls
    Set gcConnDtls.ConnDb = dbsAttTool

    ' Disable the error handler since this is not a
critical step
    On Error GoTo 0
    SaveSetting App.Title, "Settings",
STEPMASTER_SETTINGS_VAL_NAME_DBFILE, sDb
End Sub
Private Sub UpdateContinuationCriteria(dbFile As
DAO.Database)

    Dim qyTemp As DAO.QueryDef
    Dim sBuf As String

    On Error GoTo UpdateContinuationCriteriaErr

    sBuf = "Since this version of the executable
incorporates failure processing, " & _
            "the upgrade will update the On Failure
field for each of the steps " & _
            "to 'Continue' to be compatible with the
existing behaviour. " & _
            "Proceed?"
    If Not Confirm(Buttons:=vbYesNo,
strMessage:=sBuf, strTitle:="Upgrade database") Then
        Exit Sub
    End If

    ' Create a recordset object to retrieve all steps
for
    ' the given workspace
    sBuf = " update att_steps a " & _
          " set continuation_criteria = " &
CStr(gintOnFailureContinue) & _
        " where archived_flag = [archived] "

    ' Find the highest X-component of the version
number
    sBuf = sBuf & " AND cint( mid( version_no, 1,
instr( version_no, " & gstrDQ & gstrVerSeparator &
gstrDQ & " ) - 1 ) ) = " & _
        " ( select max( cint( mid( version_no, 1,
instr( version_no, " & gstrDQ & gstrVerSeparator &
gstrDQ & " ) - 1 ) ) ) " & _
        " from att_steps AS d " & _
        " WHERE a.step_id = d.step_id ) "

    ' Find the highest Y-component of the version
number for the highest X-component

    sBuf = sBuf & " AND cint( mid( version_no, instr(
version_no, " & gstrDQ & gstrVerSeparator & gstrDQ &
" ) + 1 ) ) = " & _
        " ( select max( cint( mid( version_no, instr(
version_no, " & gstrDQ & gstrVerSeparator & gstrDQ &
" ) + 1 ) ) ) " & _
        " from att_steps AS b " & _
        " Where a.step_id = b.step_id " & _
        " AND cint( mid( version_no, 1, instr(
version_no, " & gstrDQ & gstrVerSeparator & gstrDQ &
" ) - 1 ) ) = " & _
        " ( select max( cint( mid( version_no, 1,
instr( version_no, " & gstrDQ & gstrVerSeparator &
gstrDQ & " ) - 1 ) ) ) " & _
        " from att_steps AS c " & _
        " WHERE a.step_id = c.step_id ) ) "

    ' Create a temporary Querydef object
    Set qyTemp =
dbFile.CreateQueryDef(gstrEmptyString, sBuf)
    qyTemp.Parameters("archived").Value = False

    qyTemp.Execute dbFailOnError
    qyTemp.Close

    Exit Sub

UpdateContinuationCriteriaErr:
    Call LogErrors(Errors)
    Err.Raise vbObjectError + errModifyStepFailed,
mstrModuleName, _
            LoadResString(errModifyStepFailed)

End Sub

Private Sub UpdateDbDtls(dbFile As Database,
sNewVersion As String)

    Dim sSql As String
    Dim cTemp As New cStringSM

    On Error GoTo UpdateDbDtlsErr

    sSql = "update db_details " & _
            " set db_version = " &
cTemp.MakeStringFieldValid(sNewVersion)

    dbFile.Execute sSql, dbFailOnError

    Exit Sub

UpdateDbDtlsErr:
    Call LogErrors(Errors)
    Err.Raise vbObjectError + errUpgradeFailed,
mstrModuleName, _
            LoadResString(errUpgradeFailed)

End Sub

Private Sub Upgrade10to21(UpgradeWsp As
DAO.Workspace, dbFile As Database, sVersion As
String)
```


© 2006 Hewlett-Packard Company. All rights reserved.

```
    Dim sSql As String

    On Error GoTo Upgrade10to21Err

    Call UpdateDbDtls(dbFile, sVersion)

    Call UpdateContinuationCriteria(dbFile)

    Exit Sub

Upgrade10to21Err:
    UpgradeWsp.Rollback
    Call LogErrors(Errors)
    Err.Raise vbObjectError + errUpgradeFailed,
mstrModuleName, _
            LoadResString(errUpgradeFailed)

End Sub
Private Sub Upgrade21to23(UpgradeWsp As
DAO.Workspace, dbFile As Database, sVersion As
String)

    Dim sBuf As String
    Dim cTempStr As New cStringSM

    On Error GoTo Upgrade21to23Err

    ' Add a parameter type field and a description
field to the parameter table
    sBuf = "alter table workspace_parameters " & _
            " add column description TEXT(255) "
    dbFile.Execute sBuf, dbFailOnError

    sBuf = "alter table workspace_parameters " & _
            " add column parameter_type INTEGER "
    dbFile.Execute sBuf, dbFailOnError

    ' Initialize the parameter type on all parameters
to indicate generic parameters
    sBuf = "update workspace_parameters " & _
            " set parameter_type = " &
CStr(gintParameterGeneric)
    dbFile.Execute sBuf, dbFailOnError

    sBuf = "Release 2.3 onwards, connection string
parameters will be " & _
            "displayed in a separate node. After this
upgrade, all connection " & _
            "string parameters will appear under the
Globals/Connection Strings " & _
            "node in the workspace. "
    Call MsgBox(sBuf, vbOKOnly + vbApplicationModal,
"Upgrade database")

    ' Update the parameter type on all parameters
that look like db connection strings
    sBuf = "update workspace_parameters " & _
            " set parameter_type = " &
CStr(gintParameterConnect) & _
            " where UCase(parameter_value) like
'*DRIVER*' " & _
            " or UCase(parameter_value) like '*DSN*'"
    dbFile.Execute sBuf, dbFailOnError

    ' Add an elapsed time field to the
run_step_details table - this field is
    ' needed to store the elapsed time in
milliseconds.
    sBuf = "alter table run_step_details " & _
            " add column elapsed_time LONG "
    dbFile.Execute sBuf, dbFailOnError

    ' The failure_details field has some data for the
case when an ODBC failure
    ' threshold was specified. Since that's no longer
relevant, update the failure_details
    ' field for records with failure_criteria =
gintFailureODBC to empty.
    ' failure_criteria = gintFailureODBC = 1
    sBuf = "update att_steps " & _
            " set failure_details = " &
cTempStr.MakeStringFieldValid(gstrEmptyString) & _
            " where failure_criteria = '1'"
    dbFile.Execute sBuf, dbFailOnError

    Call UpdateDbDtls(dbFile, sVersion)

    UpgradeWsp.CommitTrans

    On Error GoTo DropColumnErr

    UpgradeWsp.BeginTrans

    ' This ddl cannot be in the same transaction as
the failure_details update
    ' But we can do this in a separate transaction
since we do not expect this
    ' statement to fail - AND, it doesn't matter if
this transaction fails
    ' Drop the failure_criteria column from the
att_steps table
    sBuf = "alter table att_steps " & _
            " drop column failure_criteria "
    dbFile.Execute sBuf, dbFailOnError

    Exit Sub

DropColumnErr:
    Call LogErrors(Errors)
    ShowError errDeleteColumnFailed
    Exit Sub

Upgrade21to23Err:
    UpgradeWsp.Rollback
    Call LogErrors(Errors)
    Err.Raise vbObjectError + errUpgradeFailed,
mstrModuleName, _
            LoadResString(errUpgradeFailed)

End Sub
Private Sub Upgrade23to24(UpgradeWsp As
DAO.Workspace, dbFile As Database, sVersion As
String)

    Dim sBuf As String
    Dim lId As Long
    Dim rTemp As DAO.Recordset
    Dim cTempStr As New cStringSM

    On Error GoTo Upgrade23to24Err

    ' Add a new table for connection properties
    sBuf = CreateConnectionsTableScript()
    ' TODO: Not sure of column sizes for row count,
tsql_batch_separator and server_language
    dbFile.Execute sBuf, dbFailOnError

    ' Move all connection parameters from the
parameter table to the connections tables
    ' Insert default values for the newly added
connection properties
    sBuf = "select * from workspace_parameters " & _
            "where parameter_type = " &
CStr(gintParameterConnect)
    Set rTemp = dbFile.OpenRecordset(sBuf,
dbOpenSnapshot)
    lId = 1
    If rTemp.RecordCount <> 0 Then
        rTemp.MoveFirst

        While Not rTemp.EOF
            sBuf = "insert into workspace_connections
" & _
             "( workspace_id, connection_id, " & _
             "connection_name, connection_value, " &
_
             "description, no_count_display, " & _
             "no_execute, parse_query_only, " & _
             "ANSI_quoted_identifiers, ANSI_nulls, "
& _
             "show_query_plan, show_stats_time, " & _
             "show_stats_io, parse_odbc_msg_prefixes,
" & _
             "row_count, tsql_batch_separator, " & _
             "query_time_out, server_language, " & _
             "character_translation,
regional_settings ) " & _
            " values ( " & _
            Str(rTemp!workspace_id) & ", " & Str(lId)
& ", " & _
            cTempStr.MakeStringFieldValid("" &
rTemp!parameter_name) & ", " & _
            cTempStr.MakeStringFieldValid("" &
rTemp!parameter_value) & ", " & _
            cTempStr.MakeStringFieldValid("" &
rTemp!Description) & ", " & _
            Str(DEF_NO_COUNT_DISPLAY) & ", " & _
            Str(DEF_NO_EXECUTE) & ", " &
Str(DEF_PARSE_QUERY_ONLY) & ", " & _
            Str(DEF_ANSI_QUOTED_IDENTIFIERS) & ", " &
Str(DEF_ANSI_NULLS) & ", " & _
            Str(DEF_SHOW_QUERY_PLAN) & ", " &
Str(DEF_SHOW_STATS_TIME) & ", " & _
            Str(DEF_SHOW_STATS_IO) & ", " &
Str(DEF_PARSE_ODBC_MSG_PREFIXES) & ", " & _
            Str(DEF_ROW_COUNT) & ", " &
cTempStr.MakeStringFieldValid(DEF_TSQL_BATCH_SEPARATO
R) & ", " & _
```


© 2006 Hewlett-Packard Company. All rights reserved.

```
            Str(DEF_QUERY_TIME_OUT) & ", " &
cTempStr.MakeStringFieldValid(DEF_SERVER_LANGUAGE) &
", " & _
            Str(DEF_CHARACTER_TRANSLATION) & ", " &
Str(DEF_REGIONAL_SETTINGS) & _
            " ) "
            dbFile.Execute sBuf, dbFailOnError

            lId = lId + 1
            rTemp.MoveNext
        Wend
    End If
    rTemp.Close

    ' Add an identifier column for the connection_id
field
    sBuf = "alter table att_identifiers " & _
            " add column connection_id long "
    dbFile.Execute sBuf, dbFailOnError

    ' Initialize the value of the connection
identifier, initialized above
    sBuf = "update att_identifiers " & _
            " set connection_id = " & Str(lId)
    dbFile.Execute sBuf, dbFailOnError

    ' Delete all connection strings from the
parameter table
    sBuf = "delete from workspace_parameters " & _
             "where parameter_type = " &
CStr(gintParameterConnect)
    dbFile.Execute sBuf, dbFailOnError

    ' Create the built-in parameter, default
directory, for each workspace in the db
    Call InsertBuiltInParameter(dbFile,
PARAM_DEFAULT_DIR, gstrEmptyString,
PARAM_DEFAULT_DIR_DESC)

    Call UpdateDbDtls(dbFile, sVersion)

    Exit Sub

Upgrade23to24Err:
    UpgradeWsp.Rollback
    Call LogErrors(Errors)
    Err.Raise vbObjectError + errUpgradeFailed,
mstrModuleName, _
            LoadResString(errUpgradeFailed)

End Sub
Private Sub Upgrade243to25(UpgradeWsp As
DAO.Workspace, dbFile As Database, sVersion As
String)

    Dim sBuf As String
    Dim qy As DAO.QueryDef
    Dim rTemp As DAO.Recordset
    Dim lId As Long
    Dim cTempStr As New cStringSM

    On Error GoTo Upgrade243to25Err

    sBuf = "Release " & gsVersion25 & " onwards, new
'Connections' must be created for all " & _
            "connection strings. " & vbCrLf & vbCrLf
& _
            "Connections will appear under the
Globals/Connections " & _
            "node in the workspace. " & vbCrLf & _
            "A list of all 'Connections' (instead of
'Connection Strings') " & _
            "in the workspace will be displayed in
the 'Connections' field for " & _
            "ODBC steps on the Step definition
screen. " & vbCrLf & vbCrLf & _
            "Each Connection can be marked as static
or dynamic. " & vbCrLf & _
            "Dynamic connections will be created when
a step starts execution and " & _
            "closed once the step completes. " &
vbCrLf & _
            "Static connections will be kept open
till the run completes." & vbCrLf & vbCrLf & _
            "Currently dynamic 'Connections' have
been created for all existing 'Connection Strings' "
& _
            "with the suffix " &
CONNECTION_STRINGS_TO_NAME_SUFFIX
    Call MsgBox(sBuf, vbOKOnly + vbApplicationModal,
"Upgrade database")

    ' Add a new table for the connection name entity
    ' This table has been added in order to satisfy
the TPC-H requirement that
    ' all the queries in a stream need to be executed
on a single connection.
    sBuf = CreateConnectionDtlsTableScript()
    dbFile.Execute sBuf, dbFailOnError

    ' Add an identifier column for the
connection_name_id field
    sBuf = "alter table att_identifiers " & _
            " add column " & FLD_ID_CONN_NAME & "
long "
    dbFile.Execute sBuf, dbFailOnError

    Call UpdateDbDtls(dbFile, sVersion)

    ' insert connection_dtl records for each of the
connection strings
    sBuf = "select * from " & TBL_CONNECTION_STRINGS
    Set rTemp = dbFile.OpenRecordset(sBuf,
dbOpenSnapshot)

    sBuf = "insert into " & TBL_CONNECTION_DTLS & _
             "( " & FLD_ID_WORKSPACE & _
             ", " & FLD_ID_CONN_NAME & _
             ", " & FLD_CONN_DTL_CONNECTION_NAME & _
             ", " & FLD_CONN_DTL_CONNECTION_STRING &
_
             ", " & FLD_CONN_DTL_CONNECTION_TYPE & "
) " & _
            " values ( [w_id], [c_id], [c_name],
[c_str], [c_type] ) "
    Set qy = dbFile.CreateQueryDef("", sBuf)

    lId = glMinId
    If rTemp.RecordCount <> 0 Then
        rTemp.MoveFirst

        While Not rTemp.EOF
            qy.Parameters("w_id").Value =
rTemp.Fields(FLD_ID_WORKSPACE)
            qy.Parameters("c_id").Value = lId
            qy.Parameters("c_name").Value =
rTemp.Fields(FLD_CONN_STR_CONNECTION_NAME) &
CONNECTION_STRINGS_TO_NAME_SUFFIX
            qy.Parameters("c_str").Value =
rTemp.Fields(FLD_CONN_STR_CONNECTION_NAME)
            qy.Parameters("c_type").Value =
ConnTypeDynamic

            qy.Execute dbFailOnError

            lId = lId + 1
            rTemp.MoveNext
        Wend
    End If
    qy.Close
    rTemp.Close

    ' Initialize the value of the connection_name_id
    sBuf = "update att_identifiers " & _
            " set " & FLD_ID_CONN_NAME & " = " &
Str(lId)
    dbFile.Execute sBuf, dbFailOnError

    ' Update the start_directory field in att_steps
to point to the newly
    ' created connections
    Call ReadStepsInWorkspace(rTemp, qy, glInvalidId,
dbLoad:=dbFile, _
            bSelectArchivedRecords:=False)

    sBuf = "update " & TBL_STEPS & _
        " set " & FLD_STEPS_EXEC_DTL & " = [c_name] "
& _
        " where " & FLD_ID_STEP & " = [s_id] " & _
        " and " & FLD_STEPS_VERSION_NO & " = [ver_no]
"
    Set qy = dbFile.CreateQueryDef("", sBuf)

    If rTemp.RecordCount <> 0 Then
        rTemp.MoveFirst

        While Not rTemp.EOF
            If
rTemp.Fields(FLD_STEPS_EXEC_MECHANISM).Value =
gintExecuteODBC Then
                If Not (StringEmpty("" &
rTemp.Fields(FLD_STEPS_EXEC_DTL))) Then
                    sBuf =
rTemp.Fields(FLD_STEPS_EXEC_DTL)
                    ' Strip the enclosing "%"
characters
                    sBuf = Mid(sBuf, 2, Len(sBuf) -
2) & CONNECTION_STRINGS_TO_NAME_SUFFIX
```


© 2006 Hewlett-Packard Company. All rights reserved.

```
                    qy.Parameters("c_name").Value =
sBuf
                    qy.Parameters("s_id").Value =
rTemp.Fields(FLD_ID_STEP)
                    qy.Parameters("ver_no").Value =
rTemp.Fields(FLD_STEPS_VERSION_NO)

                    qy.Execute dbFailOnError
                End If
            End If
            rTemp.MoveNext
        Wend
    End If

    qy.Close
    rTemp.Close

    Exit Sub

Upgrade243to25Err:
    UpgradeWsp.Rollback
    Call LogErrors(Errors)
    Err.Raise vbObjectError + errUpgradeFailed,
mstrModuleName, _
            LoadResString(errUpgradeFailed)

End Sub
Private Sub Upgrade25to251(UpgradeWsp As
DAO.Workspace, dbFile As Database, sVersion As
String)

    On Error GoTo Upgrade25to251Err

    ' Create the built-in parameters, run_id and
output_dir, for each workspace in the db
    Call InsertBuiltInParameter(dbFile, PARAM_RUN_ID,
gstrEmptyString, PARAM_RUN_ID_DESC)
    Call InsertBuiltInParameter(dbFile,
PARAM_OUTPUT_DIR, gstrEmptyString,
PARAM_OUTPUT_DIR_DESC)

    Call UpdateDbDtls(dbFile, sVersion)

    Exit Sub

Upgrade25to251Err:
    UpgradeWsp.Rollback
    Call LogErrors(Errors)
    Err.Raise vbObjectError + errUpgradeFailed,
mstrModuleName, _
            LoadResString(errUpgradeFailed)

End Sub

Private Sub Upgrade242to243(UpgradeWsp As
DAO.Workspace, dbFile As Database, sVersion As
String)

    Dim sBuf As String
    Dim cTempStr As New cStringSM
    Dim iResponse As Integer

    On Error GoTo DeleteHistoryErr

    Call DeleteRunHistory(dbFile)

    On Error GoTo Upgrade242to243Err

    UpgradeWsp.CommitTrans

    UpgradeWsp.BeginTrans

    ' Add a parameter type field and a description
field to the parameter table
    sBuf = "alter table run_step_details " & _
            " add column parent_instance_id LONG "

    dbFile.Execute sBuf, dbFailOnError

    sBuf = "alter table run_step_details " & _
            " add column iterator_value TEXT(255) "

    dbFile.Execute sBuf, dbFailOnError

    Call AlterFieldType(dbFile, TBL_RUN_STEP_DTLS,
"start_time", DATA_TYPE_CURRENCY)
    Call AlterFieldType(dbFile, TBL_RUN_STEP_DTLS,
"end_time", DATA_TYPE_CURRENCY)
    Call AlterFieldType(dbFile, TBL_RUN_STEP_HDR,
"start_time", DATA_TYPE_CURRENCY)
    Call AlterFieldType(dbFile, TBL_RUN_STEP_HDR,
"end_time", DATA_TYPE_CURRENCY)

    Call UpdateDbDtls(dbFile, sVersion)

    Exit Sub

DeleteHistoryErr:
    ' This is not a critical error - continue with
upgrade
    Call LogErrors(Errors)
    Resume Next

Upgrade242to243Err:
    UpgradeWsp.Rollback
    Call LogErrors(Errors)
    Err.Raise vbObjectError + errUpgradeFailed,
mstrModuleName, _
            LoadResString(errUpgradeFailed)

End Sub
'**************************************************
*************
' The AlterFieldType Sub procedure requires three
string
' parameters. The first string specifies the name of
the table
' containing the field to be changed. The second
string specifies
' the name of the field to be changed. The third
string specifies
' the new data type for the field.
'**************************************************
*************
Private Sub AlterFieldType(dbFile As Database,
TblName As String, FieldName As String, _
                    NewDataType As String)
    Dim qdf As DAO.QueryDef
    Dim sSql As String

    ' Add a temporary field to the table.
    sSql = "ALTER TABLE [" & TblName & _
            "] ADD COLUMN AlterTempField " &
NewDataType
    Set qdf = dbFile.CreateQueryDef("", sSql)
    qdf.Execute

    ' Copy the data from old field into the new
field.
    qdf.SQL = "UPDATE DISTINCTROW [" & TblName & "]
SET AlterTempField = [" & FieldName & "]"
    qdf.Execute

    ' Delete the old field.
    qdf.SQL = "ALTER TABLE [" & TblName & "] DROP
COLUMN [" & FieldName & "]"
    qdf.Execute

    ' Rename the temporary field to the old field's
name.
    dbFile.TableDefs("[" & TblName &
"]").Fields("AlterTempField").Name = FieldName
    dbFile.TableDefs.Refresh

    ' Clean up.
End Sub
Private Sub Upgrade01to21(UpgradeWsp As
DAO.Workspace, dbFile As DAO.Database, sVersion As
String)
    Dim sSql As String

    On Error GoTo Upgrade01to21Err

    sSql = "Create table db_details (" & _
             "db_version                Text(50) " &
_
    ");"

    dbFile.Execute sSql, dbFailOnError

    sSql = "insert into db_details " & _
            "( db_version ) values ( '" & sVersion &
"' ) "

    dbFile.Execute sSql, dbFailOnError

    Call UpdateContinuationCriteria(dbFile)

    Exit Sub

Upgrade01to21Err:
    Call LogErrors(Errors)
    UpgradeWsp.Rollback
    Err.Raise vbObjectError + errUpgradeFailed,
mstrModuleName, _
            LoadResString(errUpgradeFailed)
```


© 2006 Hewlett-Packard Company. All rights reserved.

```
End Sub
Private Function UpgradeDb(UpgradeWsp As
DAO.Workspace, dbFile As Database, _
        sVerTo As String, sVerFrom As String) As
Boolean

    Dim sMsg As String

    On Error GoTo UpgradeDbErr

    UpgradeDb = False
    If Not ValidUpgrade(sVerTo, sVerFrom) Then Exit
Function

    If NoDbChanges(sVerTo, sVerFrom) Then
        UpgradeDb = True
        Exit Function
    End If

    sMsg = "The database needs to be upgraded from
Version " & sVerFrom & _
            " to Version " & sVerTo & "." & vbCrLf &
_
            "Proceed?"
    If Not Confirm(Buttons:=vbYesNo,
strMessage:=sMsg, strTitle:="Upgrade database") Then
        Exit Function
    End If

    UpgradeWsp.BeginTrans

    Select Case sVerFrom
        Case gsVersion25
            Call Upgrade25to251(UpgradeWsp, dbFile,
gsVersion251)

        Case gsVersion243
            Call Upgrade243to25(UpgradeWsp, dbFile,
gsVersion25)
            Call Upgrade25to251(UpgradeWsp, dbFile,
gsVersion251)

        Case gsVersion24, gsVersion241, gsVersion242
            sMsg = "After this upgrade, the run
history for previous runs will no longer be
available. " & _
                    "Continue?"
            If Not Confirm(Buttons:=vbYesNo,
strMessage:=sMsg, strTitle:="Upgrade database") Then
                UpgradeWsp.CommitTrans
                Exit Function
            End If
            Call Upgrade242to243(UpgradeWsp, dbFile,
gsVersion243)
            Call Upgrade243to25(UpgradeWsp, dbFile,
gsVersion25)
            Call Upgrade25to251(UpgradeWsp, dbFile,
gsVersion251)

        Case gsVersion23
            Call Upgrade23to24(UpgradeWsp, dbFile,
gsVersion24)
            Call Upgrade242to243(UpgradeWsp, dbFile,
gsVersion242)
            Call Upgrade243to25(UpgradeWsp, dbFile,
gsVersion25)
            Call Upgrade25to251(UpgradeWsp, dbFile,
gsVersion251)

        Case gsVersion21
            Call Upgrade21to23(UpgradeWsp, dbFile,
gsVersion23)
            Call Upgrade23to24(UpgradeWsp, dbFile,
gsVersion24)
            Call Upgrade242to243(UpgradeWsp, dbFile,
gsVersion242)
            Call Upgrade243to25(UpgradeWsp, dbFile,
gsVersion25)
            Call Upgrade25to251(UpgradeWsp, dbFile,
gsVersion251)

        Case gsVersion10
            Call Upgrade10to21(UpgradeWsp, dbFile,
gsVersion21)
            Call Upgrade21to23(UpgradeWsp, dbFile,
gsVersion23)
            Call Upgrade23to24(UpgradeWsp, dbFile,
gsVersion24)
            Call Upgrade242to243(UpgradeWsp, dbFile,
gsVersion242)
            Call Upgrade243to25(UpgradeWsp, dbFile,
gsVersion25)
            Call Upgrade25to251(UpgradeWsp, dbFile,
gsVersion251)

        Case gsVersion01
            Call Upgrade01to21(UpgradeWsp, dbFile,
gsVersion21)
            Call Upgrade21to23(UpgradeWsp, dbFile,
gsVersion23)
            Call Upgrade23to24(UpgradeWsp, dbFile,
gsVersion24)
            Call Upgrade242to243(UpgradeWsp, dbFile,
gsVersion242)
            Call Upgrade243to25(UpgradeWsp, dbFile,
gsVersion25)
            Call Upgrade25to251(UpgradeWsp, dbFile,
gsVersion251)

    End Select

    UpgradeWsp.CommitTrans

    UpgradeDb = True
    Exit Function

UpgradeDbErr:
    Call LogErrors(Errors)
    ShowError errUpgradeFailed

End Function
Private Function DBVersion(TestDb As Database) As
String
    ' Retrieves the database version
    Dim rVersion As Recordset

    On Error GoTo DBVersionErr

    Set rVersion = TestDb.OpenRecordset("Select
db_version from db_details ", _
            dbOpenForwardOnly)

    BugAssert rVersion.RecordCount <> 0
    DBVersion = rVersion!db_version

    rVersion.Close
    Exit Function

DBVersionErr:
    If Err.Number = merrDaoTableMissing Then
        DBVersion = gsVersion01
    Else
        LogErrors Errors
        Err.Raise vbObjectError + errUpgradeFailed,
mstrModuleName, _
                LoadResString(errUpgradeFailed)
    End If

End Function

Private Function ValidUpgrade(sVerTo As String,
sVerFrom As String) As Boolean

    If sVerTo = gsVersion And sVerFrom = gsVersion251
Then
        ValidUpgrade = True
    ElseIf sVerTo = gsVersion And sVerFrom =
gsVersion25 Then
        ValidUpgrade = True
    ElseIf sVerTo = gsVersion And sVerFrom =
gsVersion243 Then
        ValidUpgrade = True
    ElseIf sVerTo = gsVersion And sVerFrom =
gsVersion242 Then
        ValidUpgrade = True
    ElseIf sVerTo = gsVersion And sVerFrom =
gsVersion241 Then
        ValidUpgrade = True
    ElseIf sVerTo = gsVersion And sVerFrom =
gsVersion24 Then
        ValidUpgrade = True
    ElseIf sVerTo = gsVersion And sVerFrom =
gsVersion23 Then
        ValidUpgrade = True
    ElseIf sVerTo = gsVersion And sVerFrom =
gsVersion21 Then
        ValidUpgrade = True
    ElseIf sVerTo = gsVersion And sVerFrom =
gsVersion10 Then
        ValidUpgrade = True
    ElseIf sVerTo = gsVersion And sVerFrom =
gsVersion01 Then
        ValidUpgrade = True
    Else
        ValidUpgrade = False
    End If

End Function
```


© 2006 Hewlett-Packard Company. All rights reserved.

DebugSM.bas

```
Attribute VB_Name = "DebugSM"
'  FILE:       DebugSM.bas
'              Microsoft TPC-H Kit Ver. 1.00
'              Copyright Microsoft, 1999
'              All Rights Reserved
'
'
'  PURPOSE:    Contains all the functions that carry
out error/debug
'              processing for the project.
'  Contact:    Reshma Tharamal
(reshmat@microsoft.com)
'
' Most of the functions in this module that
manipulate the
' error object do not have an On Error GoTo statement
- this
' is because it will clear the passed in error object
- let
' the calling functions handle the errors raised by
this
' module, if any
Option Explicit

' Used to indicate the source module name when errors
' are raised by this module
Private Const mstrModuleName As String = "DebugSM."

Private mcLogFile As cFileSM
Private mcErrorFile As cFileSM

Private Const FORMAT_MESSAGE_FROM_SYSTEM = &H1000
Private Const FORMAT_MESSAGE_IGNORE_INSERTS = &H200
Private Const pNull = 0

Declare Function FormatMessage Lib "kernel32" Alias
"FormatMessageA" (ByVal dwFlags As Long, lpSource As
Any, ByVal dwMessageId As Long, ByVal dwLanguageId As
Long, ByVal lpbuffer As String, ByVal nSize As Long,
Arguments As Long) As Long
Public Function Confirm(Optional lngMessageCode As
conConfirmMsgCodes, _
        Optional lngTitleCode As
conConfirmMsgTitleCodes, _
        Optional TitleParameter As String, _
        Optional ByVal Buttons As Integer = -1, _
        Optional strMessage As String =
gstrEmptyString, _
        Optional strTitle As String =
gstrEmptyString) _
        As Boolean
    ' Displays a confirmation message corresponding
to the
    ' passed in message code. Returns True if the
user says
    ' Ok and False otherwise

    Dim intResponse As Integer

    Dim intButtonStyle As Integer

    On Error GoTo ConfirmErr

    Confirm = False

    ' If the buttons style hasn't been specified, set
the
    ' default style to display OK and Cancel buttons
    If Buttons = -1 Then
        intButtonStyle = vbOKCancel
    Else
        intButtonStyle = Buttons
    End If

    ' Find the message string for the passed in code
    If StringEmpty(strMessage) Then
        strMessage =
Trim$(LoadResString(lngMessageCode))
    End If

    If StringEmpty(strTitle) Then
        strTitle = Trim$(LoadResString(lngTitleCode))
    End If

    If Not StringEmpty(TitleParameter) Then
        strTitle = strTitle & Chr$(vbKeySpace) & _
                gstrSQ & TitleParameter & gstrSQ
    End If

    ' Display the confirmation message with the
Cancel button
    ' set to the default - assume that we are
confirming
    ' potentially dangerous operations!
    intResponse = MsgBox(strMessage, _
            intButtonStyle + vbQuestion +
vbApplicationModal, _
            strTitle)

    ' Translate the user response into a True/False
return code
    If intButtonStyle = vbOKCancel Then
        If intResponse = vbOK Then
            Confirm = True
        Else
            Confirm = False
        End If
    Else
        If intResponse = vbYes Then
            Confirm = True
        Else
            Confirm = False
        End If
    End If

    Exit Function

ConfirmErr:
    ' Log the error code raised by Visual Basic
    Call LogErrors(Errors)
    On Error GoTo 0
    gstrSource = mstrModuleName & "Confirm"
    Err.Raise vbObjectError + errConfirmFailed, _
            gstrSource, _
            LoadResString(errConfirmFailed)

End Function
Public Sub LogSystemError()
    Dim eErrCode As Long

    eErrCode = GetLastError()
    If eErrCode <> 0 Then
        WriteToFile "System Error: " & eErrCode &
vbCrLf & ApiError(eErrCode), _
                blnError:=True
    End If

End Sub
Public Function ApiError(ByVal e As Long) As String

    Dim s As String
    Dim c As Long

    s = String(256, 0)
    c = FormatMessage(FORMAT_MESSAGE_FROM_SYSTEM Or _
            FORMAT_MESSAGE_IGNORE_INSERTS, _
            pNull, e, 0&, s, Len(s), ByVal pNull)
    If c Then ApiError = e & ": " & Left$(s, c)

End Function

' Output flags determine output destination of
BugAsserts and messages
#Const afLogfile = 1
#Const afMsgBox = 2
#Const afDebugWin = 4
#Const afAppLog = 8

' Display appropriate error message, and then stop
' program.  These errors should NOT be possible in
' shipping product.
Sub BugAssert(ByVal fExpression As Boolean, _
             Optional sExpression As String)
#If afDebug Then
    If fExpression Then Exit Sub
    BugMessage "BugAssert failed: " & sExpression
    Stop
#End If
End Sub

Sub BugMessage(sMsg As String)

#If afDebug And afLogfile Then
    ' Since we are writing log messages, the error
flag is turned off
    Call WriteToFile(sMsg, False)
#End If
#If afDebug And afMsgBox Then
    MsgBox sMsg
#End If
#If afDebug And afDebugWin Then
    Debug.Print sMsg
#End If
#If afDebug And afAppLog Then
    App.LogEvent sMsg
```


© 2006 Hewlett-Packard Company. All rights reserved.

```
#End If

End Sub
Public Function ProjectLogFile() As String

    ProjectLogFile = mcLogFile.FileName

End Function
Public Function ProjectErrorFile() As String

    ProjectErrorFile = mcErrorFile.FileName

End Function

Private Sub WriteToFile(sMsg As String, Optional
ByVal blnError As Boolean)

    ' Calls procedures to write the passed in message
to the log -
    ' The blnError flag is used to indicate that the
message
    ' should be logged to the error file - by default
the log
    ' file is used

    Dim mcFileObj As cFileSM
    Dim strFileName As String
    Dim strFileHdr As String

    On Error GoTo WriteToFileErr

    If blnError Then
        If mcErrorFile Is Nothing Then
            Set mcErrorFile = New cFileSM
        End If
        Set mcFileObj = mcErrorFile
    Else
        If mcLogFile Is Nothing Then
            Set mcLogFile = New cFileSM
        End If
        Set mcFileObj = mcLogFile
    End If

    If StringEmpty(mcFileObj.FileName) Then
        If blnError Then
            strFileName = gstrProjectPath & "\" &
App.EXEName & ".ERR"
            strFileHdr = "Stepmaster Errors"
        Else
            strFileName = gstrProjectPath & "\" &
App.EXEName & ".DBG"
            strFileHdr = "Stepmaster Log"
        End If

        mcFileObj.FileName = strFileName
        mcFileObj.WriteLine strFileHdr
        mcFileObj.WriteLine "Log start time : " & Now
    End If

    mcFileObj.WriteLine sMsg

    Exit Sub

WriteToFileErr:
    ' Display the error code raised by Visual Basic
    Call DisplayErrors(Errors)
    ' An error message would've been displayed by the
called
    ' procedures

End Sub
Public Sub WriteMessage(sMsg As String)

    Call WriteToFile(sMsg, True)

End Sub

Sub BugTerm()
#If afDebug And afLogfile Then
    ' Close log file
    mcLogFile.CloseFile
#End If
End Sub

Public Sub ShowError(ByVal ErrorCode As
errErrorConstants, _
        Optional ByVal ErrorSource As String =
gstrEmptyString, _
        Optional ByVal OptArgs As String =
gstrEmptyString, _
        Optional ByVal DoWriteError As Boolean =
True)

    If DoWriteError Then
        ' Call a procedure to write the error to a
log file
        Call WriteError(ErrorCode, ErrorSource,
OptArgs)
    End If

    ' Re-initialize the values of the Error object
before
    ' displaying the error to the user
    Call InitErrObject(ErrorCode, ErrorSource,
OptArgs)

    Call DisplayErrors(Errors)

    Err.Clear

End Sub
Public Sub WriteError(ByVal ErrorCode As
errErrorConstants, _
        Optional ByVal ErrorSource As String =
gstrEmptyString, _
        Optional ByVal OptArgs As String =
gstrEmptyString)

    ' Initialize the values of the Error object
before
    ' calling the log function
    Call InitErrObject(ErrorCode, ErrorSource,
OptArgs)

    Call LogErrors(Errors)

    Err.Clear

End Sub
Private Sub InitErrObject(ByVal ErrorCode As
errErrorConstants, _
        Optional ByVal ErrorSource As String =
gstrEmptyString, _
        Optional ByVal OptArgs As String =
gstrEmptyString)

    Dim lngError As Long

    lngError = IIf(ErrorCode > vbObjectError And
ErrorCode < vbObjectError + 65535, _
            ErrorCode - vbObjectError, ErrorCode)
    Err.Number = lngError + vbObjectError
    Err.Description = LoadResString(lngError) &
OptArgs
    Err.Source = App.EXEName & ErrorSource

End Sub
Public Sub ShowMessage(ByVal MessageCode As
errErrorConstants, _
        Optional ByVal OptArgs As String)

    Dim strMessage As String

    On Error GoTo ShowMessageErr

    strMessage = LoadResString(MessageCode) & OptArgs

    ' Write the error to a log file
    BugMessage strMessage

    MsgBox strMessage, vbOKOnly

    Exit Sub

ShowMessageErr:
    ' Log the error and exit
    Call DisplayErrors(Errors)

End Sub
Public Sub ShowMessageStr(sMessage As String)

    ' Write the error to a log file
    BugMessage sMessage

    MsgBox sMessage, vbOKOnly

End Sub

Public Sub DisplayErrors(myErrCollection As Errors)
    Dim strError As String
    Dim errLoop As Error
    Dim errCode As Long

    ' Enumerate Errors collection and display
properties of
    ' each Error object.
    If Err.Number <> 0 Then
        If Err.Number > vbObjectError And Err.Number
< (vbObjectError + 65536) Then
```


© 2006 Hewlett-Packard Company. All rights reserved.

```
            errCode = Err.Number - vbObjectError
        Else
            errCode = Err.Number
        End If
        strError = "Error # " & Str(errCode) & " was
generated by " _
            & Err.Source & Chr(13) & Err.Description
        MsgBox strError, , "Error", Err.HelpFile,
Err.HelpContext
    Else
        For Each errLoop In myErrCollection
            With errLoop
                If Err.Number > vbObjectError And
Err.Number < (vbObjectError + 65536) Then
                    errCode = .Number - vbObjectError
                Else
                    errCode = .Number
                End If
                strError = "Error #" & errCode &
vbCrLf
                strError = strError & "    " &
.Description & vbCrLf
                strError = strError & _
                    "    (Source: " & .Source & ")" &
vbCrLf
'                strError = strError & _
'                    "Press F1 to see topic " &
.HelpContext & vbCrLf
'                strError = strError & _
'                    "    in the file " & .HelpFile &
"."
            End With

            MsgBox strError
        Next
    End If

End Sub
Public Sub LogErrors(myErrCollection As Errors)
    Dim cColErrors As cVectorStr
    Dim strError As String
    Dim errLoop As Error
    Dim errCode As Long
    Dim lngIndex As Long

    Set cColErrors = New cVectorStr

    ' Enumerate Errors collection and display
properties of
    ' each Error object.
    If Err.Number <> 0 Then
        If Err.Number > vbObjectError And Err.Number
< (vbObjectError + 65536) Then
            errCode = Err.Number - vbObjectError
        Else
            errCode = Err.Number
        End If
        strError = "Error # " & Str(errCode) & " was
generated by " _
            & Err.Source & vbCrLf & Err.Description

        cColErrors.Add strError
    End If

    ' Log all database errors, if any
    For Each errLoop In myErrCollection
        With errLoop
            If Err.Number > vbObjectError And
Err.Number < (vbObjectError + 65536) Then
                errCode = .Number - vbObjectError
            Else
                errCode = .Number
            End If
            strError = "Error #" & errCode & vbCrLf
            strError = strError & "    " &
.Description & vbCrLf
            strError = strError & _
                "    (Source: " & .Source & ")" &
vbCrLf
        End With

        cColErrors.Add strError
    Next

    ' We can have a error handler now that we have
stored all
    ' errors away safely! - having an error handler
before
    ' enumerating all the errors would have cleared
the error
    ' collection
    On Error GoTo LogErrorsErr
    gstrSource = mstrModuleName & "LogErrors"

    For lngIndex = 0 To cColErrors.Count - 1
        strError = cColErrors(lngIndex)
        Debug.Print strError
        Call WriteToFile(strError, True)
    Next lngIndex

    Set cColErrors = Nothing

    Exit Sub

LogErrorsErr:
    ' Display the error code raised by Visual Basic
    DisplayErrors Errors
    On Error GoTo 0
    ShowError errUnableToWriteError,
DoWriteError:=False

End Sub
```

FileCommon.bas

```
Attribute VB_Name = "FileCommon"
'  FILE:       FileCommon.bas
'              Microsoft TPC-H Kit Ver. 1.00
'              Copyright Microsoft, 1999
'              All Rights Reserved
'
'  PURPOSE:    This module contains common
functionality to display
'              the File Open dialog.
'  Contact:    Reshma Tharamal
(reshmat@microsoft.com)
'
Option Explicit

' Used to indicate the source module name when errors
' are raised by this module
Private Const mstrModuleName As String =
"FileCommon."

Private Enum EOpenFile
    OFN_OVERWRITEPROMPT = &H2
    OFN_HIDEREADONLY = &H4
    OFN_FILEMUSTEXIST = &H1000
    OFN_EXPLORER = &H80000
End Enum

' The locations for the different output files are
presented to
' the user in a list box. These constants are used
while loading the
' data and while reading the data from the list box.
' These constants also represent the different file
types that are
' displayed to the user in File Open dialogs
Public Enum gFileTypes
    gintOutputFile = 0
'    gintLogFile = 1
    gintErrorFile
    gintStepTextFile
    gintOutputCompareFile
    gintDBFile
    gintDBFileNew
    gintImportFile
    gintExportFile
End Enum

Public Const gsSqlFileSuffix = ".sql"
Public Const gsCmdFileSuffix = ".cmd"

Public Const gsOutputFileSuffix = ".out"
Public Const gstrLogFileSuffix = ".log"
Public Const gsErrorFileSuffix = ".err"
Public Function BrowseDBFile() As String
    ' Prompts the user for a database file with the
workspace information
    ' Call CallFileDialog to display the open file
dialog
    BrowseDBFile = CallFileDialog(gintDBFile)

End Function
Public Function CallFileDialog(intFileType As
Integer, _
        Optional ByVal strDefaultFile As String =
gstrEmptyString) As String
    ' This function initializes the values of the
filter property,
    ' the dialog title and flags for the File Open
dialog depending
    ' on the FileType passed in
```


© 2006 Hewlett-Packard Company. All rights reserved.

```
    ' It then calls ShowFileOpenDialog to set these
properties and
    ' display the File Open dialog to the user

    ' All the properties used by the File Open dialog
are defined
    ' as constants in this function and passed to
ShowFileOpenDialog
    ' as parameters. So if any of the dialog
properties need to be
    ' modified, these constants are what need to be
changed
    Const s_DLG_TITLE_OPEN = "Open"
    Const s_DLG_TITLE_NEW = "New"
    Const s_DLG_TITLE_IMPORT = "Import From"
    Const s_DLG_TITLE_EXPORT = "Export To"

    Const mlng_FILE_STEP_TEXT_FLAGS = OFN_EXPLORER Or
OFN_FILEMUSTEXIST Or OFN_HIDEREADONLY
    Const mlng_FILE_OUTPUT_COMPARE_FLAGS =
mlng_FILE_STEP_TEXT_FLAGS
    Const mlng_FILE_DB_FLAGS =
mlng_FILE_STEP_TEXT_FLAGS
    Const mlng_FILE_OUTPUT_FLAGS = OFN_EXPLORER Or
OFN_HIDEREADONLY Or OFN_OVERWRITEPROMPT
    Const mlng_FILE_LOG_FLAGS =
mlng_FILE_OUTPUT_FLAGS
    Const mlng_FILE_ERROR_FLAGS =
mlng_FILE_OUTPUT_FLAGS
    Const mlng_FILE_DB_NEW_FLAGS =
mlng_FILE_OUTPUT_FLAGS

    Const mstr_FILE_ALL_FILTER = "|All Files
(*.*)|*.*"
    Const mstr_FILE_STEP_TEXT_FILTER = "Query Files
(*" & gsSqlFileSuffix & _
            ")|*" & gsSqlFileSuffix & "|Command
Script Files (*" & gsCmdFileSuffix & _
            ")|*" & gsCmdFileSuffix
    Const mstr_FILE_OUTPUT_COMPARE_FILTER = "Text
Files (*.txt)|*.txt"
    Const mstr_FILE_OUTPUT_FILTER = "Output Files
(*.out)|*.out"
    Const mstr_FILE_LOG_FILTER = "Log Files
(*.log)|*.log"
    Const mstr_FILE_ERROR_FILTER = "Error Files
(*.err)|*.err"
    Const mstr_FILE_DB_FILTER = "Stepmaster Workspace
Files (*" & gsDefDBFileExt & ")|*" & gsDefDBFileExt

    Dim strFileName As String

    On Error GoTo CallFileDialogErr

    Select Case intFileType
        Case gintStepTextFile
            strFileName = ShowFileOpenDialog( _
                mstr_FILE_STEP_TEXT_FILTER &
mstr_FILE_ALL_FILTER, _
                s_DLG_TITLE_OPEN, _
                mlng_FILE_STEP_TEXT_FLAGS, _
                strDefaultFile)

        Case gintOutputCompareFile
            strFileName = ShowFileOpenDialog( _
                mstr_FILE_OUTPUT_COMPARE_FILTER &
mstr_FILE_ALL_FILTER, _
                s_DLG_TITLE_OPEN, _
                mlng_FILE_OUTPUT_COMPARE_FLAGS, _
                strDefaultFile)

        Case gintOutputFile
            strFileName = ShowFileOpenDialog( _
                mstr_FILE_OUTPUT_FILTER &
mstr_FILE_ALL_FILTER, _
                s_DLG_TITLE_OPEN, _
                mlng_FILE_OUTPUT_FLAGS, _
                strDefaultFile)

'        Case gintLogFile
'            strFileName = ShowFileOpenDialog( _
'                mstr_FILE_LOG_FILTER &
mstr_FILE_ALL_FILTER, _
'                s_DLG_TITLE_OPEN, _
'                mlng_FILE_LOG_FLAGS, _
'                strDefaultFile)
'
        Case gintErrorFile
            strFileName = ShowFileOpenDialog( _
                mstr_FILE_ERROR_FILTER &
mstr_FILE_ALL_FILTER, _
                s_DLG_TITLE_OPEN, _
                mlng_FILE_ERROR_FLAGS, _
                strDefaultFile)

        Case gintDBFile
            strFileName = ShowFileOpenDialog( _
                mstr_FILE_DB_FILTER &
mstr_FILE_ALL_FILTER, _
                s_DLG_TITLE_OPEN, _
                mlng_FILE_DB_FLAGS, _
                strDefaultFile)

        Case gintDBFileNew
            strFileName = ShowFileOpenDialog( _
                mstr_FILE_DB_FILTER &
mstr_FILE_ALL_FILTER, _
                s_DLG_TITLE_NEW, _
                mlng_FILE_DB_NEW_FLAGS, _
                strDefaultFile)

        Case gintImportFile
            strFileName = ShowFileOpenDialog( _
                mstr_FILE_DB_FILTER &
mstr_FILE_ALL_FILTER, _
                s_DLG_TITLE_IMPORT, _
                mlng_FILE_DB_FLAGS, _
                strDefaultFile)

        Case gintExportFile
            strFileName = ShowFileOpenDialog( _
                mstr_FILE_DB_FILTER &
mstr_FILE_ALL_FILTER, _
                s_DLG_TITLE_EXPORT, _
                mlng_FILE_DB_FLAGS, _
                strDefaultFile)

        Case Else
            BugAssert True, "Incorrect file type
passed in."
            ' Default processing will be for the
output file
            strFileName = ShowFileOpenDialog( _
                mstr_FILE_OUTPUT_FILTER &
mstr_FILE_ALL_FILTER, _
                s_DLG_TITLE_OPEN, _
                mlng_FILE_OUTPUT_FLAGS, _
                strDefaultFile)

    End Select
    CallFileDialog = strFileName

    Exit Function

CallFileDialogErr:
    CallFileDialog = gstrEmptyString
    ' Log the error code raised by Visual Basic
    Call LogErrors(Errors)
    gstrSource = mstrModuleName & "CallFileDialog"
    Call ShowError(errBrowseFailed)

End Function
```

frmSplash.frm

```
VERSION 5.00
Begin VB.Form frmSplash
   BorderStyle     =   3  'Fixed Dialog
   ClientHeight    =   4710
   ClientLeft      =   45
   ClientTop       =   45
   ClientWidth     =   7455
   ControlBox      =   0   'False
   Icon            =   "frmSplash.frx":0000
   LinkTopic       =   "Form1"
   LockControls    =   -1  'True
   MaxButton       =   0   'False
   MinButton       =   0   'False
   ScaleHeight     =   4710
   ScaleWidth      =   7455
   ShowInTaskbar   =   0   'False
   StartUpPosition =   2  'CenterScreen
   Visible         =   0   'False
   Begin VB.Frame fraMainFrame
      Height          =   4590
      Left            =   45
      TabIndex        =   0
      Top             =   -15
      Width           =   7380
      Begin VB.PictureBox picLogo
         Height          =   2385
         Left            =   510
         Picture         =   "frmSplash.frx":0442
         ScaleHeight     =   2325
         ScaleWidth      =   1755
         TabIndex        =   1
         Top             =   855
```


© 2006 Hewlett-Packard Company. All rights reserved.

```
         Width           =   1815
      End
      Begin VB.Label lblReserved
         AutoSize        =   -1  'True
         Caption         =   "All Rights Reserved."
         Height          =   195
         Left            =   5520
         TabIndex        =   8
         Top             =   4080
         Width           =   1440
      End
      Begin VB.Label lblCopyright
         AutoSize        =   -1  'True
         Caption         =   "Copyright © 1998"
         BeginProperty Font
            Name            =   "Arial"
            Size            =   8.25
            Charset         =   0
            Weight          =   400
            Underline       =   0   'False
            Italic          =   0   'False
            Strikethrough   =   0   'False
         EndProperty
         Height          =   210
         Left            =   5550
         TabIndex        =   7
         Tag             =   "Copyright"
         Top             =   3850
         Width           =   1380
         WordWrap        =   -1  'True
      End
      Begin VB.Label lblCompany
         AutoSize        =   -1  'True
         Caption         =   "Microsoft Corporation"
         BeginProperty Font
            Name            =   "Arial"
            Size            =   8.25
            Charset         =   0
            Weight          =   400
            Underline       =   0   'False
            Italic          =   0   'False
            Strikethrough   =   0   'False
         EndProperty
         Height          =   210
         Left            =   5460
         TabIndex        =   6
         Tag             =   "Company"
         Top             =   3640
         Width           =   1560
      End
      Begin VB.Label lblRestrictions
         AutoSize        =   -1  'True
         Caption         =   "See License Agreement
for Restrictions"
         Height          =   195
         Left            =   460
         TabIndex        =   5
         Top             =   4080
         Width           =   2790
      End
      Begin VB.Label lblProductName
         AutoSize        =   -1  'True
         Caption         =   "StepMaster"
         BeginProperty Font
            Name            =   "Arial"
            Size            =   32.25
            Charset         =   0
            Weight          =   700
            Underline       =   0   'False
            Italic          =   0   'False
            Strikethrough   =   0   'False
         EndProperty
         Height          =   765
         Left            =   2670
         TabIndex        =   4
         Tag             =   "Product"
         Top             =   1200
         Width           =   3495
      End
      Begin VB.Label lblVersion
         Alignment       =   1  'Right Justify
         AutoSize        =   -1  'True
         Caption         =   "Version 2.4"
         BeginProperty Font
            Name            =   "Arial"
            Size            =   12
            Charset         =   0
            Weight          =   700
            Underline       =   0   'False
            Italic          =   0   'False
            Strikethrough   =   0   'False
         EndProperty
         Height          =   285
         Left            =   4800
         TabIndex        =   3
         Tag             =   "Version"
         Top             =   2040
         Width           =   1275
      End
      Begin VB.Label lblWarning
         AutoSize        =   -1  'True
         Caption         =   "Do Not Redistribute"
         BeginProperty Font
            Name            =   "Arial"
            Size            =   8.25
            Charset         =   0
            Weight          =   400
            Underline       =   0   'False
            Italic          =   0   'False
            Strikethrough   =   0   'False
         EndProperty
         Height          =   210
         Left            =   480
         TabIndex        =   2
         Tag             =   "Warning"
         Top             =   3850
         Width           =   1380
      End
   End
End
Attribute VB_Name = "frmSplash"
Attribute VB_GlobalNameSpace = False
Attribute VB_Creatable = False
Attribute VB_PredeclaredId = True
Attribute VB_Exposed = False
'  FILE:       frmSplash.frm
'              Microsoft TPC-H Kit Ver. 1.00
'              Copyright Microsoft, 1999
'              All Rights Reserved
'
'
'  PURPOSE:    Splash screen for StepMaster
'  Contact:    Reshma Tharamal
(reshmat@microsoft.com)
'
Option Explicit


Private Sub Form_Load()
'    lblVersion.Caption = "Version " & App.Major &
"." & App.Minor & "." & App.Revision
    lblProductName.Caption = App.Title
    lblVersion.Caption = GetVersionString

End Sub
```

frmWorkspaceOpen.frm

```
VERSION 5.00
Begin VB.Form frmWorkspaceOpen
   BorderStyle     =   3  'Fixed Dialog
   Caption         =   "Open Workspace"
   ClientHeight    =   2550
   ClientLeft      =   45
   ClientTop       =   330
   ClientWidth     =   4695
   LinkTopic       =   "Form1"
   LockControls    =   -1  'True
   MaxButton       =   0   'False
   MinButton       =   0   'False
   ScaleHeight     =   2550
   ScaleWidth      =   4695
   ShowInTaskbar   =   0   'False
   StartUpPosition =   1  'CenterOwner
   Begin VB.CommandButton cmdOK
      Caption         =   "OK"
      Default         =   -1  'True
      Height          =   375
      Left            =   2160
      TabIndex        =   2
      Top             =   2040
      Width           =   1095
   End
   Begin VB.CommandButton cmdCancel
      Cancel          =   -1  'True
      Caption         =   "Cancel"
      Height          =   375
      Left            =   3360
      TabIndex        =   3
      Top             =   2040
      Width           =   1095
   End
```


© 2006 Hewlett-Packard Company. All rights reserved.

```
   Begin VB.ListBox lstWorkspaces
      Height          =   1425
      ItemData        =   "frmWorkspaceOpen.frx":0000
      Left            =   240
      List            =   "frmWorkspaceOpen.frx":0002
      MultiSelect     =   2  'Extended
      TabIndex        =   1
      Top             =   480
      Width           =   4215
   End
   Begin VB.Label lblWorkspaces
      AutoSize        =   -1  'True
      Caption         =   "Workspace"
      Height          =   195
      Left            =   240
      TabIndex        =   0
      Top             =   120
      Width           =   825
   End
End
Attribute VB_Name = "frmWorkspaceOpen"
Attribute VB_GlobalNameSpace = False
Attribute VB_Creatable = False
Attribute VB_PredeclaredId = True
Attribute VB_Exposed = False
'  FILE:       frmWorkspaceOpen.frm
'              Microsoft TPC-H Kit Ver. 1.00
'              Copyright Microsoft, 1999
'              All Rights Reserved
'
'
'  PURPOSE:    Used to display a list of all
workspaces in a
'              workspace definition file for Open,
Import, Export
'              and Run (in SMRunOnly) workspace
'  Contact:    Reshma Tharamal
(reshmat@microsoft.com)
'
Option Explicit
#If RUN_ONLY Then
    Private WithEvents cRunOnlyInst As cRunOnly
Attribute cRunOnlyInst.VB_VarHelpID = -1

Private Sub cRunOnlyInst_Done()
    ShowFree
End Sub

Private Sub Run()
    Dim iIndex As Integer

    Set cRunOnlyInst = New cRunOnly

    For iIndex = 0 To Me.lstWorkspaces.ListCount - 1
        If Me.lstWorkspaces.Selected(iIndex) Then
            ShowBusy
            cRunOnlyInst.WorkspaceId =
Me.lstWorkspaces.ItemData(Me.lstWorkspaces.ListIndex)
            cRunOnlyInst.WspName =
Me.lstWorkspaces.List(Me.lstWorkspaces.ListIndex)
            cRunOnlyInst.RunWsp
        End If
    Next iIndex

End Sub

#End If

Private Sub cmdCancel_Click()

    Unload Me

End Sub

Private Sub cmdOK_Click()

#If RUN_ONLY Then
    Call Run
#Else
    Call WorkspaceOpenOk
#End If

End Sub


Private Sub lstWorkspaces_DblClick()

    ' A double click on the workspaces list box is
considered
    ' equivalent to selecting an item in the list and
then selecting
    ' the OK command
    Call cmdOK_Click

End Sub
```

IteratorCommon.bas

```
Attribute VB_Name = "IteratorCommon"
'  FILE:       IteratorCommon.bas
'              Microsoft TPC-H Kit Ver. 1.00
'              Copyright Microsoft, 1999
'              All Rights Reserved
'
'
'  PURPOSE:    Contains functionality common across
StepMaster and
'              SMRunOnly, pertaining to iterators
'              Specifically, functions to read
iterators records
'              in the workspace, load them in an
array and so on.
'  Contact:    Reshma Tharamal
(reshmat@microsoft.com)
'
Option Explicit

' Used to indicate the source module name when errors
' are raised by this module
Private Const mstrModuleName As String =
"IteratorCommon."

Public Const gintMinIteratorSequence As Integer = 0

Public Sub RangeComplete(vntIterators As Variant)
    ' This is a debug procedure
    ' Checks if the from, to and step values are
present in
    ' the array

    Dim bReset As Byte
    Dim bShift As Byte
    Dim lngIndex As Long

    ' Set the three lowest order bits to 1
    bReset = 7

    BugAssert IsArray(vntIterators) And Not
IsEmpty(vntIterators), _
            "Iterators not specified!"

    For lngIndex = LBound(vntIterators) To _
            UBound(vntIterators)
        bShift = 1
        bShift = bShift * (2 ^
(vntIterators(lngIndex).IteratorType - 1))

        bReset = bReset Xor bShift
    Next lngIndex

    ' Assert that all the elements are present
    BugAssert bReset = 0, "Range not completely
specified!"

End Sub
Public Sub LoadIteratorsForWsp(cStepsCol As
cArrSteps, _
        ByVal lngWorkspaceId As Long, rstStepsInWsp
As Recordset)
    ' Initializes the step records in with all the
iterator
    ' values for each step

    Dim recIterators As Recordset

    On Error GoTo LoadIteratorsForWspErr

#If QUERY_ALL Then
    Dim dtStart As Date

    dtStart = Now
    Set recIterators =
ReadWspIterators(lngWorkspaceId)

    Call LoadIteratorsArray(cStepsCol, recIterators)

    recIterators.Close

    BugMessage "QueryAll Read + load took: " &
CStr(DateDiff("s", dtStart, Now))

#Else
    Dim dtStart As Date
    Dim qyIt As DAO.QueryDef
```


© 2006 Hewlett-Packard Company. All rights reserved.

```
    Dim sSql As String

    dtStart = Now
    If rstStepsInWsp.RecordCount = 0 Then
        Exit Sub
    End If

    ' This method has the advantage that if the steps
are queried right, everything else follows
    sSql = "Select step_id, version_no, type,
iterator_value, " & _
        " sequence_no " & _
        " from iterator_values " & _
        " where step_id = [s_id] " & _
        " and version_no = [ver_no] "

    ' Order the iterators by sequence within a step
    sSql = sSql & " order by sequence_no "

    Set qyIt =
dbsAttTool.CreateQueryDef(gstrEmptyString, sSql)
    rstStepsInWsp.MoveFirst

    While Not rstStepsInWsp.EOF

        qyIt.Parameters("s_id").Value =
rstStepsInWsp!step_id
        qyIt.Parameters("ver_no").Value =
rstStepsInWsp!version_no

        Set recIterators =
qyIt.OpenRecordset(dbOpenSnapshot)

        Call LoadIteratorsArray(cStepsCol,
recIterators)
        recIterators.Close

        rstStepsInWsp.MoveNext
    Wend

    qyIt.Close

    BugMessage "Query step at a time Read + load
took: " & CStr(DateDiff("s", dtStart, Now))

#End If

    Exit Sub

LoadIteratorsForWspErr:
    LogErrors Errors
    gstrSource = mstrModuleName &
"LoadIteratorsForWsp"
    On Error GoTo 0
    Err.Raise vbObjectError + errLoadRsInArrayFailed,
_
            gstrSource, _
            LoadResString(errLoadRsInArrayFailed)

End Sub
Private Function ReadWspIterators(ByVal
lngWorkspaceId As Long) As Recordset

    ' This function will return a recordset that is
populated
    ' with the iterators for all the steps in a given
workspace

    Dim recIterators As Recordset
    Dim qyIt As DAO.QueryDef
    Dim strSql As String

    On Error GoTo ReadWspIteratorsErr
    gstrSource = mstrModuleName & "ReadWspIterators"

    strSql = "Select i.step_id, i.version_no, " & _
        " i.type, i.iterator_value, " & _
        " i.sequence_no " & _
        " from iterator_values i, att_steps a " & _
        " where i.step_id = a.step_id " & _
        " and i.version_no = a.version_no " & _
        " and a.workspace_id = [w_id] " & _
        " and a.archived_flag = [archived] "

    ' Find the highest X-component of the version
number
    strSql = strSql & " AND cint( mid( a.version_no,
1, instr( a.version_no, " & gstrDQ & gstrVerSeparator
& gstrDQ & " ) - 1 ) ) = " & _
        " ( select max( cint( mid( version_no, 1,
instr( version_no, " & gstrDQ & gstrVerSeparator &
gstrDQ & " ) - 1 ) ) ) " & _
        " from att_steps AS d " & _
        " WHERE a.step_id = d.step_id ) "

    ' Find the highest Y-component of the version
number for the highest X-component
    strSql = strSql & " AND cint( mid( a.version_no,
instr( a.version_no, " & gstrDQ & gstrVerSeparator &
gstrDQ & " ) + 1 ) ) = " & _
        " ( select max( cint( mid( version_no, instr(
version_no, " & gstrDQ & gstrVerSeparator & gstrDQ &
" ) + 1 ) ) ) " & _
        " from att_steps AS b " & _
        " Where a.step_id = b.step_id " & _
        " AND cint( mid( version_no, 1, instr(
version_no, " & gstrDQ & gstrVerSeparator & gstrDQ &
" ) - 1 ) ) = " & _
        " ( select max( cint( mid( version_no, 1,
instr( version_no, " & gstrDQ & gstrVerSeparator &
gstrDQ & " ) - 1 ) ) ) " & _
        " from att_steps AS c " & _
        " WHERE a.step_id = c.step_id ) ) "


    ' Order the iterators by sequence within a step
    strSql = strSql & " order by i.step_id,
i.sequence_no "

    Set qyIt =
dbsAttTool.CreateQueryDef(gstrEmptyString, strSql)
    qyIt.Parameters("w_id").Value = lngWorkspaceId
    qyIt.Parameters("archived").Value = False

    Set recIterators =
qyIt.OpenRecordset(dbOpenSnapshot)

    qyIt.Close
    Set ReadWspIterators = recIterators

    Exit Function

ReadWspIteratorsErr:
    ' Log the error code raised by Visual Basic
    Call LogErrors(Errors)
    On Error GoTo 0
    Err.Raise vbObjectError + errReadDataFailed, _
            gstrSource,
LoadResString(errReadDataFailed)

End Function
Private Sub LoadIteratorsArray(cStepsCol As
cArrSteps, _
        recIterators As Recordset)
    ' Initializes the step records with the iterators
for
    ' the step

    Dim cNewIt As cIterator
    Dim cStepRec As cStep
    Dim lngStepId As Long

    On Error GoTo LoadIteratorsArrayErr
    gstrSource = mstrModuleName &
"LoadIteratorsArray"

    If recIterators.RecordCount = 0 Then
        Exit Sub
    End If

    recIterators.MoveFirst
    While Not recIterators.EOF
        Set cNewIt = New cIterator

        lngStepId =
CLng(ErrorOnNullField(recIterators, "step_id"))
        If Not cStepRec Is Nothing Then
            If cStepRec.StepId <> lngStepId Then
                Set cStepRec =
cStepsCol.QueryStep(lngStepId)
            End If
        Else
            Set cStepRec =
cStepsCol.QueryStep(lngStepId)
        End If

        ' Initialize iterator values
        cNewIt.IteratorType =
CInt(ErrorOnNullField(recIterators, "type"))
        cNewIt.Value =
CStr(ErrorOnNullField(recIterators,
"iterator_value"))
        cNewIt.SequenceNo =
CInt(ErrorOnNullField(recIterators, "sequence_no"))

        ' Add this record to the array of iterators
        cStepRec.LoadIterator cNewIt

        Set cNewIt = Nothing
```


© 2006 Hewlett-Packard Company. All rights reserved.

```
        recIterators.MoveNext
    Wend

    Exit Sub

LoadIteratorsArrayErr:
    LogErrors Errors
    gstrSource = mstrModuleName &
"LoadIteratorsArray"
    On Error GoTo 0
    Err.Raise vbObjectError + errLoadRsInArrayFailed,
_
            gstrSource, _
            LoadResString(errLoadRsInArrayFailed)

End Sub
```

MsgConfirm.bas

```
Attribute VB_Name = "MsgConfirm"
'  FILE:       MsgConfirm.bas
'              Microsoft TPC-H Kit Ver. 1.00
'              Copyright Microsoft, 1999
'              All Rights Reserved
'
'
'  PURPOSE:    Contains constants for confirmation
messages that
'              will be displayed by StepMaster
'  Contact:    Reshma Tharamal
(reshmat@microsoft.com)
'
Option Explicit

' A public enum containing the codes for all the
confirmation
' messages that will be used by the project - each of
the codes
' has the prefix, con
Public Enum conConfirmMsgCodes
    conWspDelete = 2000
    conSave
    conStopRun
    conSaveConnect
    conSaveDB
End Enum

' A public enum containing the titles for all the
confirmation
' messages that will be used by the project - each of
the codes
' has the prefix, cont - most confirmation message
codes will
' have a corresponding title code in here
Public Enum conConfirmMsgTitleCodes
    contWspDelete = 3000
    contSave
    contStopRun
    contSaveConnect
    contSaveDB
End Enum
```

OpenFiles.bas

```
Attribute VB_Name = "OpenFiles"
'  FILE:       OpenFiles.bas
'              Microsoft TPC-H Kit Ver. 1.00
'              Copyright Microsoft, 1999
'              All Rights Reserved
'
'
'  PURPOSE:    This module holds a list of all files
that have been
'              opened by the project. This module is
needed since there
'              is no way to share static data between
different instances
'              of a class.
'              Many procedure in this module do not
do any error handling -
'              this is 'coz it is also used by
procedures that log error
'              messages and any error handler will
erase the collection
'              of errors!

'  Contact:    Reshma Tharamal
(reshmat@microsoft.com)
'
Option Explicit


' Used to indicate the source module name when errors
' are raised by this class
Private Const mstrModuleName As String =
".OpenFiles."

Private mOpenFiles As cNodeCollections

Private Const mstrTempDir As String = "\Temp\"

' The maximum number of temporary files that we can
create in a
' session
Private Const mlngMaxFileIndex As Long = 999999
Private Const mstrFileIndexFormat As String =
"000000"
Private Const mstrTempFilePrefix As String = "SM"
Private Const mstrTempFileSuffix As String = ".cmd"

Private Const merrFileNotFound As Long = 76
Private Function GetFileHandle(strFileName) As
cFileInfo

    Dim lngIndex As Long
    Dim blnFileOpen As Boolean

    If Not mOpenFiles Is Nothing Then
        blnFileOpen = False
        For lngIndex = 0 To mOpenFiles.Count - 1
            If mOpenFiles(lngIndex).FileName =
strFileName Then
                blnFileOpen = True
                Exit For
            End If
        Next lngIndex

        If blnFileOpen Then
            Set GetFileHandle = mOpenFiles(lngIndex)
        Else
            Set GetFileHandle = Nothing
        End If
    Else
        Set GetFileHandle = Nothing
    End If

End Function

Private Function GetTempFileDir() As String

    Dim strTempFileDir As String

    On Error GoTo GetTempFileDirErr

    strTempFileDir = gstrProjectPath & mstrTempDir

    If StringEmpty(Dir$(strTempFileDir, vbDirectory))
Then
        MkDir strTempFileDir
    End If

    GetTempFileDir = strTempFileDir

    Exit Function

GetTempFileDirErr:
    ' Log the error code raised by Visual Basic
    Call LogErrors(Errors)
    gstrSource = mstrModuleName & "GetTempFileDir"
    On Error GoTo 0
    Err.Raise vbObjectError + errProgramError,
gstrSource, _
            LoadResString(errProgramError)

End Function
Public Function MakePathValid(strFileName As String)
As String
    ' Checks if the passed in file path is valid

    Dim strFileDir As String
    Dim strTempDir As String
    Dim strTempFile As String
    Dim intPos As Integer
    Dim intStart As Integer

    On Error GoTo MakePathValidErr
    gstrSource = mstrModuleName & "MakePathValid"

    strTempFile = strFileName
    intPos = InstrR(strFileName, gstrFileSeparator)
```


© 2006 Hewlett-Packard Company. All rights reserved.

```
    If intPos > 0 Then
        strFileDir = Left$(strTempFile, intPos - 1)
        If StringEmpty(Dir$(strFileDir, vbDirectory))
Then
            ' Loop through the entire path starting
at the root
            ' since Mkdir can create only one level
of sub-directory
            ' at a time
            intStart = InStr(strFileDir,
gstrFileSeparator)

            Do While strTempDir <> strFileDir

                If intStart > 0 Then
                    strTempDir = Left$(strFileDir,
intStart - 1)
                Else
                    strTempDir = strFileDir
                End If

                If StringEmpty(Dir$(strTempDir,
vbDirectory)) Then
                    ' If the specified directory
doesn't exist, try to
                    ' create it.
                    MkDir strTempDir
                Else
                    ' The directory exists - go to
it's sub-directory
                End If
                intStart = InStr(intStart + 1,
strFileDir, gstrFileSeparator)
            Loop

            ' Sanity check
            If StringEmpty(Dir$(strFileDir,
vbDirectory)) Then
                ' We were unable to create the file
directory
                ShowError errCreateDirectoryFailed,
gstrSource, _
                        strFileDir,
DoWriteError:=False
                MakePathValid = gstrEmptyString
            Else
                MakePathValid = strTempFile
            End If
        Else
            ' The specified directory exists - we
should be able
            ' to create the output file in it
            MakePathValid = strTempFile
        End If
    Else
        ' The user has only specified a filename - VB
will try
        ' to create it in the current directory
        MakePathValid = strTempFile
    End If

    Exit Function

MakePathValidErr:
    ' Log the error code raised by Visual Basic
    Call LogErrors(Errors)
    gstrSource = mstrModuleName & "MakePathValid"
    ' Log the filename for debug
    Call WriteError(errInvalidFile, gstrSource,
strTempFile)
    On Error GoTo 0
    Err.Raise vbObjectError + errProgramError,
gstrSource, _
            LoadResString(errProgramError)

End Function
Public Function OpenFileSM(strFileName As String) As
Integer
    Dim intHFile As Integer
    Dim NewFileInfo As cFileInfo

    On Error GoTo OpenFileSMErr
    gstrSource = mstrModuleName & "OpenFileSM"

    If StringEmpty(strFileName) Then
        On Error GoTo 0
        Err.Raise vbObjectError + errInvalidFile,
gstrSource, _
                LoadResString(errInvalidFile)
    End If

    If mOpenFiles Is Nothing Then
        Set mOpenFiles = New cNodeCollections
    End If

    Set NewFileInfo = GetFileHandle(strFileName)

    If NewFileInfo Is Nothing Then
        ' The file has not been opened yet

        ' If the filename has not been initialized,
do not
        ' attempt to open it
        strFileName = MakePathValid(strFileName)

        If strFileName <> gstrEmptyString Then
            intHFile = FreeFile
            Open strFileName For Output Shared As
intHFile

            Set NewFileInfo = New cFileInfo
            NewFileInfo.FileHandle = intHFile
            NewFileInfo.FileName = strFileName
            mOpenFiles.Load NewFileInfo
        Else
            ' Either the directory was invalid or
s'thing failed
            ' Display the error to the user instead
of trying
            ' to log to the file
            ShowError errInvalidFile, gstrSource,
strFileName, _
                    DoWriteError:=False
            intHFile = 0
        End If
    Else
        intHFile = NewFileInfo.FileHandle
    End If

    OpenFileSM = intHFile

    Exit Function

OpenFileSMErr:
    ' Log the error code raised by Visual Basic
    Call LogErrors(Errors)
    ' The Open command failed for some reason - write
an error
    ' and let the calling function handle the error
    ShowError errInvalidFile, gstrSource,
strFileName, _
            DoWriteError:=False
    OpenFileSM = 0

End Function
Public Function CreateTempFile() As String

    Dim strTempFileDir As String
    Dim strTempFileName As String

    Static lngLastFileIndex As Long

    On Error GoTo CreateTempFileErr

    strTempFileDir = GetTempFileDir()

    Do
        If lngLastFileIndex = mlngMaxFileIndex Then
            On Error GoTo 0
            Err.Raise vbObjectError +
errMaxTempFiles, gstrSource, _
                    LoadResString(errMaxTempFiles)
        End If

        lngLastFileIndex = lngLastFileIndex + 1
        strTempFileName = mstrTempFilePrefix & _
                Format$(lngLastFileIndex,
mstrFileIndexFormat) & _
                mstrTempFileSuffix

        If Not StringEmpty(Dir$(strTempFileDir &
strTempFileName)) Then
            ' Remove any files left over from a
previous run,
            ' if they still exist
            Kill strTempFileDir & strTempFileName
        End If

    ' Looping in case the file delete doesn't go
through for
    ' some reason
    Loop While Not StringEmpty(Dir$(strTempFileDir &
strTempFileName))

    CreateTempFile = GetShortName(strTempFileDir)
    CreateTempFile = CreateTempFile & strTempFileName

    Exit Function
```


© 2006 Hewlett-Packard Company. All rights reserved.

```
CreateTempFileErr:
    ' Log the error code raised by Visual Basic
    Call LogErrors(Errors)
    gstrSource = gstrSource & "CreateTempFile"
    On Error GoTo 0
    Err.Raise vbObjectError + errProgramError,
gstrSource, _
            LoadResString(errProgramError)

End Function
Public Sub CloseFileSM(strFileName As String)
    Dim FileToClose As cFileInfo

    If Not mOpenFiles Is Nothing Then

        ' Get the handle to the open file, if it
exists
        Set FileToClose = GetFileHandle(strFileName)

        If Not FileToClose Is Nothing Then
            Close FileToClose.FileHandle

            ' Remove the file info from the
collection of open files
            mOpenFiles.Unload FileToClose.Position
        End If
    End If

End Sub
Public Sub CloseOpenFiles()
    Dim lIndex As Long

    If Not mOpenFiles Is Nothing Then
        For lIndex = mOpenFiles.Count - 1 To 0
            CloseFileSM (mOpenFiles(lIndex).FileName)
        Next lIndex
    End If

End Sub
```

ParameterCommon.bas

```
Attribute VB_Name = "ParameterCommon"
'  FILE:       ParameterCommon.bas
'              Microsoft TPC-H Kit Ver. 1.00
'              Copyright Microsoft, 1999
'              All Rights Reserved
'
'
'  PURPOSE:    Contains functionality common across
StepMaster and
'              SMRunOnly, pertaining to parameters
'              Specifically, functions to load
parameter records
'              in an array.
'  Contact:    Reshma Tharamal
(reshmat@microsoft.com)
'
Option Explicit

' Used to indicate the source module name when errors
' are raised by this module
Private Const mstrModuleName As String =
"ParameterCommon."

Public Sub
LoadRecordsetInParameterArray(rstWorkSpaceParameters
As Recordset, _
    cParamCol As cArrParameters)

    Dim cNewParameter As cParameter

    On Error GoTo LoadRecordsetInParameterArrayErr

    If rstWorkSpaceParameters.RecordCount = 0 Then
        Exit Sub
    End If

    rstWorkSpaceParameters.MoveFirst
    While Not rstWorkSpaceParameters.EOF

        Set cNewParameter = New cParameter

        ' Initialize parameter values
        cNewParameter.ParameterId =
rstWorkSpaceParameters.Fields(0)

        ' Call a procedure to raise an error if
mandatory fields are
        ' null.
        cNewParameter.ParameterName = CStr( _

ErrorOnNullField(rstWorkSpaceParameters,
"parameter_name"))
        cNewParameter.ParameterValue =
CheckForNullField( _
                rstWorkSpaceParameters,
"parameter_value")
        cNewParameter.WorkspaceId = CStr( _

ErrorOnNullField(rstWorkSpaceParameters,
FLD_ID_WORKSPACE))
        cNewParameter.ParameterType = CStr( _

ErrorOnNullField(rstWorkSpaceParameters,
"parameter_type"))
        cNewParameter.Description =
CheckForNullField( _
                rstWorkSpaceParameters,
"description")

        cParamCol.Load cNewParameter

        Set cNewParameter = Nothing
        rstWorkSpaceParameters.MoveNext
    Wend

    Exit Sub

LoadRecordsetInParameterArrayErr:
    LogErrors Errors
    gstrSource = mstrModuleName &
"LoadRecordsetInParameterArray"
    On Error GoTo 0
    Err.Raise vbObjectError + errLoadRsInArrayFailed,
gstrSource, _
            LoadResString(errLoadRsInArrayFailed)
End Sub
```

Public.bas

```
Attribute VB_Name = "Public"
'  FILE:       Public.bas
'              Microsoft TPC-H Kit Ver. 1.00
'              Copyright Microsoft, 1999
'              All Rights Reserved
'
'
'  PURPOSE:    This module contains all the public
constants for this project
'  Contact:    Reshma Tharamal
(reshmat@microsoft.com)
'
Option Explicit

Public Const gsVersion01 As String = "0.1"
Public Const gsVersion10 As String = "1.0"
Public Const gsVersion21 As String = "2.1"
Public Const gsVersion23 As String = "2.3"
Public Const gsVersion24 As String = "2.4"
Public Const gsVersion241 As String = "2.4.1"
Public Const gsVersion242 As String = "2.4.2"
Public Const gsVersion243 As String = "2.4.3"
Public Const gsVersion25 As String = "2.5"
Public Const gsVersion251 As String = "2.5.1"
Public Const gsVersion253 As String = "2.5.3"
Public Const gsVersion254 As String = "2.5.4"
Public Const gsVersion255 As String = "2.5.5"
Public Const gsVersion As String = gsVersion255

' The same form is used for the creation of new nodes
and
' updates to existing nodes (where each node can be a
parameter,
' global step, etc.) A tag is set on each flag is
used to indicate
' whether it is being called in the insert or update
mode. The
' constants for these modes are defined below
Public Const gstrInsertMode = "Insert"
Public Const gstrUpdateMode = "Update"
Public Const gstrPropertiesMode = "View"

Public Const gstrEmptyString = ""
Public Const gstrSQ = "'"
Public Const gstrDQ = """"
Public Const gstrVerSeparator = "."
Public Const gstrBlank = " "

' Constants used to indicate type of node being
processed
```


© 2006 Hewlett-Packard Company. All rights reserved.

```
' The constants for the different objects correspond
to the
' indexes in the menu control arrays (for both the
main and popup
' menus) that are used to create new objects. That
way we can
' use the index passed in by the click event to
determine the
' type of node being processed
Public Const gintWorkspace = 1

' Decided to leave it here after some debate over
whether it
' actually belongs in the cStep class definition
Public Enum gintStepType
    gintGlobalStep = 3
    gintManagerStep
    gintWorkerStep
End Enum

Public Const gintRunManager = 6
Public Const gintRunWorker = 7

Public Enum gintParameterNodeType
    gintParameter = 8
    gintNodeParamConnection
    gintNodeParamExtension
    gintNodeParamBuiltIn
End Enum

' Leave some constants free for newer types of
parameters (?)
Public Const gintConnectionDtl = 15

Public Enum gintLabelNodeType
    gintGlobalsLabel = 21
    gintParameterLabel
    gintParamConnectionLabel
    gintParamExtensionLabel
    gintParamBuiltInLabel
    gintConnDtlLabel
    gintGlobalStepLabel
    gintStepLabel
End Enum

Public Enum ConnectionType
    ConnTypeStatic = 1
    ConnTypeDynamic
End Enum

Public Const giDefaultConnType As Integer =
ConnTypeStatic

' The constants defined below are used to identify
the different
' tabs. If any more step properties and thereby tabs
are added
' to the tabbed dialog on the Step Properties form,
they should
' be defined here and accessed in the code only using
these
' pre-defined constants
' Note: These constants will mainly be used by the
functions that
' initialize, customize and display the Step
Properties form
Public Const gintDefinition = 0
Public Const gintExecution = 1
Public Const gintMgrDefinition = 2
Public Const gintPreExecutionSteps = 3
Public Const gintPostExecutionSteps = 4
Public Const gintFileLocations = 5

' These constants correspond to the index values in
the imagelist
' associated with the tree view control. The
imagelist contains
' the icons that will be displayed for each node.
Public Enum TreeImages
    gintImageWorkspaceClosed = 1
    gintImageWorkspaceOpen
    gintImageLabelClosed
    gintImageLabelOpen
    gintImageManagerClosedDis
    gintImageManagerClosedEn
    gintImageManagerOpenDis
    gintImageManagerOpenEn
    gintImageWorkerDis
    gintImageWorkerEn
    gintImageGlobalClosed
    gintImageGlobalOpen
    gintImageParameter
    gintImageRun
    gintImagePending
    gintImageStop
    gintImageDisabled
    gintImageAborted
    gintImageFailed
End Enum

' Public variable used to indicate the name of the
function
' that raises an error
Public gstrSource As String

' Public instances of the different collections
Public gcParameters As cArrParameters
Public gcSteps As cArrSteps
Public gcConstraints As cArrConstraints
Public gcConnections As cConnections
Public gcConnDtls As cConnDtls

' Public constants for the index values of the
different toolbar
' options. Will be used while dynamically
enabling/disabling
' these options.
Public Const tbNew = 1
Public Const tbOpen = 2
Public Const tbSave = 3

Public Const tbCut = 5
Public Const tbCopy = 6
Public Const tbPaste = 7
Public Const tbDelete = 8

Public Const tbProperties = 10
Public Const tbRun = 11
Public Const tbStop = 12

' The initial version #
Public Const gstrMinVersion As String = "0.0"
Public Const gstrGlobalParallelism As String = "0"
Public Const gintMinParallelism As Integer = 1
Public Const gintMaxParallelism As Integer = 100

' Constant for the minimum identifier, used for all
identifier, viz.
' step, workspace, etc.
Public Const glMinId As Long = 1
Public Const glInvalidId As Long = -1

' A parameter that has a special meaning to
Stepmaster
' The system time will be substituted wherever it
occurs
' (typically as a part of the error, log ... file
names
Public Const gstrTimeStamp As String = "TIMESTAMP"
Public Const gstrEnvVarSeparator = "%"
Public Const gstrFileSeparator = "\"
Public Const gstrUnderscore = "_"

' Constants used by date and time formatting
functions
Public Const gsTimeSeparator = ":"
Public Const gsDateSeparator = "-"
Public Const gsMsSeparator = "."
Public Const gsDtFormat = "00"
Public Const gsYearFormat = "0000"
Public Const gsTmFormat = "00"
Public Const gsMSecondFormat = "000"

' Default nothing value for a date variable
Public Const gdtmEmpty As Currency = 0

Public Const FMT_WSP_LOG_FILE As String = "yyyymmdd-
hhnnss"

Public gsContCriteria() As String
' Note: Update the initialization of
gsExecutionStatus in Initialize() if the
' InstanceStatus values are modified - also the
boundary checks
Public gsExecutionStatus() As String

Public Const gsConnTypeStatic As String = "Static"
Public Const gsConnTypeDynamic As String = "Dynamic"

#If RUN_ONLY Then
Public Const gsCaptionRunWsp As String = "Run
Workspace"
#End If

' Valid operations on a cNode object
Public Enum Operation
    QueryOp = 1
    InsertOp = 2
```


© 2006 Hewlett-Packard Company. All rights reserved.

```
    UpdateOp = 3
    DeleteOp = 4
End Enum
```

RunCommon.bas

```
Attribute VB_Name = "RunCommon"
'  FILE:       RunCommon.bas
'              Microsoft TPC-H Kit Ver. 1.00
'              Copyright Microsoft, 1999
'              All Rights Reserved
'
'
'  PURPOSE:    Contains common functions that are
used during the execution
'              of a workspace.
'  Contact:    Reshma Tharamal
(reshmat@microsoft.com)
'
Option Explicit

' Used to indicate the source module name when errors
' are raised by this class
Private Const mstrModuleName As String =
".RunCommon."


Public Function GetInstanceItValue(cInstanceRec As
cInstance) As String

    ' Returns the iterator value for the instance, if
an
    ' iterator has been defined for it
    Dim cStepIt As cRunColIt
    Dim cRunIterator As cRunItNode

    On Error GoTo GetInstanceItValueErr

    ' Since we create a dummy instance for Disabled
and Pending steps,
    ' doesn't make sense to look at their iterators
    If cInstanceRec.Status <> gintDisabled And
cInstanceRec.Status <> gintPending Then
        Set cStepIt = cInstanceRec.Iterators

        If Not
StringEmpty(cInstanceRec.Step.IteratorName) Then
            If cStepIt.Count > 0 Then
                Set cRunIterator = cStepIt(0)
                BugAssert cRunIterator.IteratorName =
cInstanceRec.Step.IteratorName, _
                        "The first iterator in the
collection is the " & _
                        "one that has been defined
for the step."
                If cRunIterator.IteratorName =
cInstanceRec.Step.IteratorName Then
                    GetInstanceItValue =
cRunIterator.Value
                Else
                    GetInstanceItValue =
gstrEmptyString
                End If
            Else
                GetInstanceItValue = gstrEmptyString
            End If
        Else
            GetInstanceItValue = gstrEmptyString
        End If
    Else
        GetInstanceItValue = gstrEmptyString
    End If

    Exit Function

GetInstanceItValueErr:
    ' Log the error code raised by Visual Basic
    Call LogErrors(Errors)
    On Error GoTo 0
    gstrSource = mstrModuleName &
"GetInstanceItValue"
    Err.Raise vbObjectError + errProgramError,
gstrSource, _
            LoadResString(errProgramError)

End Function
```

RunInstHelper.bas

```
Attribute VB_Name = "RunInstHelper"
'  FILE:       RunInstHelper.bas
'              Microsoft TPC-H Kit Ver. 1.00
'              Copyright Microsoft, 1999
'              All Rights Reserved
'
'
'  PURPOSE:    This module contains helper procedures
that are called by
'              cRunInst.cls
'  Contact:    Reshma Tharamal
(reshmat@microsoft.com)
'
Option Explicit

' Used to indicate the source module name when errors
' are raised by this class
Private Const mstrModuleName As String =
"RunInstHelper."

' Should be equal to the number of steps defined in
cRunInst.cls
Public Const glngNumConcurrentProcesses As Long = 99
Public Const gintBitsPerByte = 8

Public Function AnyStepRunning(cFreeSteps As
cVectorLng, arrFree() As Byte) As Boolean

    Dim lngIndex As Long
    Dim intPosInByte As Integer
    Dim lngTemp As Long

    ' Check if there are any running instances to
wait for
    If cFreeSteps.Count <> glngNumConcurrentProcesses
Then

        ' For every free step, reset the
corresponding element
        ' in the byte array to 0
        For lngIndex = 0 To cFreeSteps.Count - 1

            lngTemp = cFreeSteps(lngIndex) \
gintBitsPerByte
            intPosInByte = cFreeSteps(lngIndex) Mod
gintBitsPerByte

            arrFree(lngTemp) = arrFree(lngTemp) Xor 2
^ intPosInByte
        Next lngIndex

        AnyStepRunning = False

        ' Check if we have a non-zero bit in the byte
array
        For lngIndex = LBound(arrFree) To
UBound(arrFree) Step 1
            If arrFree(lngIndex) <> 0 Then
                ' We are waiting for a step to
complete
                AnyStepRunning = True
                Exit For
            End If
        Next lngIndex

    Else
        AnyStepRunning = False
    End If

End Function


Public Function OrderConstraints(vntTempCons() As
Variant, _
        intConsType As ConstraintType) As Variant
    ' Returns a variant containing all the constraint
records in the order
    ' in which they should be executed

    Dim vntTemp As Variant
    Dim lngOuter As Long
    Dim lngInner As Long
    Dim cTempConstraint As cConstraint
    Dim cConstraints() As cConstraint
    Dim lngConsCount As Long
    Dim lngLbound As Long
    Dim lngUbound As Long
    Dim lngStep As Long
```


© 2006 Hewlett-Packard Company. All rights reserved.

```
    On Error GoTo OrderConstraintsErr

    If intConsType = gintPreStep Then
        ' Since we are travelling up and we need to
execute the constraints
        ' for the top-level steps first, reverse the
order that they
        ' have been stored in the array
        lngLbound = UBound(vntTempCons)
        lngUbound = LBound(vntTempCons)
        lngStep = -1
    Else
        lngLbound = LBound(vntTempCons)
        lngUbound = UBound(vntTempCons)
        lngStep = 1
    End If

    lngConsCount = 0

    For lngOuter = lngLbound To lngUbound Step
lngStep
        vntTemp = vntTempCons(lngOuter)

        If Not IsEmpty(vntTemp) Then
            ' Each of the elements is an array
            For lngInner = LBound(vntTemp) To
UBound(vntTemp) Step 1
                If Not IsEmpty(vntTemp(lngInner))
Then
                    Set cTempConstraint =
vntTemp(lngInner)

                    If Not cTempConstraint Is Nothing
Then
                        ReDim Preserve
cConstraints(lngConsCount)
                        Set
cConstraints(lngConsCount) = cTempConstraint
                        lngConsCount = lngConsCount +
1
                    End If
                End If
            Next lngInner
        End If
    Next lngOuter

    ' Set the return value of the function to the
array of
    ' constraints that has been built above
    If lngConsCount = 0 Then
        OrderConstraints = Empty
    Else
        OrderConstraints = cConstraints()
    End If

    Exit Function

OrderConstraintsErr:
    ' Log the error code raised by Visual Basic
    Call LogErrors(Errors)
    On Error GoTo 0
    Err.Raise vbObjectError + errExecInstanceFailed,
_
            mstrModuleName,
LoadResString(errExecInstanceFailed)

End Function
```

ShellSM.bas

```
Attribute VB_Name = "ShellSM"
'  FILE:       ShellSM.bas
'              Microsoft TPC-H Kit Ver. 1.00
'              Copyright Microsoft, 1999
'              All Rights Reserved
'
'
'  PURPOSE:    This module contains a function that
creates a process and
'              waits for it to complete.
'  Contact:    Reshma Tharamal
(reshmat@microsoft.com)
'
Option Explicit

Public Function SyncShell(CommandLine As String,
Optional Timeout As Long, _
    Optional WaitForInputIdle As Boolean) As Boolean

    Dim proc As PROCESS_INFORMATION
    Dim Start As STARTUPINFO
    Dim ret As Long
    Dim nMilliseconds As Long

    BugMessage "Executing: " & CommandLine
    If Timeout > 0 Then
        nMilliseconds = Timeout
    Else
        nMilliseconds = INFINITE
    End If

    'Initialize the STARTUPINFO structure:
    Start.cb = Len(Start)
    Start.dwFlags = STARTF_USESHOWWINDOW
    Start.wShowWindow = SW_SHOWMINNOACTIVE

    'Start the shelled application:
    CreateProcessA 0&, CommandLine, 0&, 0&, 1&, _
        NORMAL_PRIORITY_CLASS, 0&, 0&, Start, proc

    If WaitForInputIdle Then
        'Wait for the shelled application to finish
setting up its UI:
        ret = InputIdle(proc.hProcess, nMilliseconds)
    Else
        'Wait for the shelled application to
terminate:
        ret = WaitForSingleObject(proc.hProcess,
nMilliseconds)
    End If

    CloseHandle proc.hProcess
    'Return True if the application finished.
Otherwise it timed out or erred.
    SyncShell = (ret = WAIT_OBJECT_0)
End Function
```

SMErr.bas

```
Attribute VB_Name = "SMErr"
'  FILE:       SMErr.bas
'              Microsoft TPC-H Kit Ver. 1.00
'              Copyright Microsoft, 1999
'              All Rights Reserved
'
'
'  PURPOSE:    This module contains error code for
all the errors that are
'              raised by StepMaster.
'  Contact:    Reshma Tharamal
(reshmat@microsoft.com)
'
Option Explicit

' A public enum containing the codes for all the
error
' messages that will be displayed by the project -
each
' of the codes has the prefix, err
Public Enum errErrorConstants
    errParameterIdInvalid = 1000
    errParameterNameMandatory
    errParameterInsertFailed
    errStepLabelOrTextOrFileRequired
    errMandatoryNodeTextMissing
    errParameterUpdateFailed
    errDupConnDtlName
    errDummy14
    errContCriteriaMandatory
    errContCriteriaNullForGlobal
    errContCriteriaInvalid = 1010
    errParamSeparatorMissing
    errStepTextOrTextFileMandatory
    errStepTextOrFile
    errEnabledFlagFalseForGlobal
    errEnabledFlagLetFailed
    errDegParallelismNullForGlobal
    errInvalidDegParallelism
    errExecutionMechanismInvalid
    errExecutionMechanismLetFailed
    errStepLevelNull = 1020
    errStepLevelZeroForGlobal
    errStepLevelLetFailed
    errRowCountNumeric
    errConnNameInvalid
    errTimeoutNumeric
    errResetConnPropertiesFailed
    errFailureThresholdNumeric
    errConnectionUpdateFailed
    errGlobalRunMethodMandatory
    errGlobalRunMethodNull = 1030
    errGlobalRunMethodInvalid
    errGlobalRunMethodLetFailed
```


© 2006 Hewlett-Packard Company. All rights reserved.

```
errNoTrueOption
errGetOptionFailed
errSetEnabled
errStepLabelTextAndFileNull
errInvalidNodeType
errSetOptionFailed
errQueryParameterFailed
errParamNotFound = 1040
errQueryStepFailed
errStepNotFound
errReadFromScreenFailed
errCopyPropertiesToFormFailed
errMandatoryFieldNull
errUnableToCheckNull
errUpgradeFailed
errFindStepSequenceFailed
errFindParentStepIdFailed
errCircularReference = 1050
errAddStepFailed
errModifyStepFailed
errDeleteColumnFailed
errFindPositionFailed
errDeleteStepFailed
errRunExistsForStepFailed
errCreateNewParentFailed
errInsertNewStepVersionFailed
errCreateNewStepFailed
errDuplicateParameterName = 1060
errCheckDupParameterNameFailed
errConstraintTypeInvalid
errConstraintTypeLetFailed
errAddConstraintFailed
errWorkspaceIdMandatory
errInvalidWorkspaceData
errGetWorkspaceDetailsFailed
errNoWorkspaceLoaded
errWorkspaceAlreadyOpen
errDuplicateWorkspaceName = 1070
errWorkspaceNameMandatory
errWorkspaceNameSetFailed
errWorkspaceIdInvalid
errWorkspaceIdSetFailed
errWorkspaceInsertFailed
errWorkspaceDeleteFailed
errWorkspaceUpdateFailed
errInvalidFile
errCheckWorkspaceOpenFailed
errWriteFailed = 1080
errDeleteParameterRecordFailed
errUnableToLogOutput
errDeleteDBRecordFailed
errRunExistsForWorkspaceFailed
errClearHistoryFailed
errCreateDBFailed
errImportWspFailed
errStepModifyFailed
errStepDeleteFailed
errDummy3 = 1090
errUnableToGetWorkspace
errInvalidNode
errUnableToRemoveSubtree
errSetFileNameFailed
errStepTypeInvalid
errObjectMandatory
errBuiltInUpdateOnly
errInvalidStep
errTypeOfStepFailed
errGetParentKeyFailed = 1100
errLabelTextAndFileCheckFailed
errStepTextAndFileNull
errTextOrFileCheckFailed
errParentStepManager
errDeleteSubStepsFailed
errWorkspaceNameDuplicateFailed
errNewConstraintVersionFailed
errDeleteStepConstraintsFailed
errOldVersionMandatory
errLoadConstraintsInListFailed = 1110
errLoadGlobalStepsFailed
errDeleteConstraintFailed
errUpdateConstraintFailed
errConstraintIdInvalid
errConstraintIdSetFailed
errGlobalStepIdInvalid
errGlobalStepIdSetFailed
errUpdateVersionFailed
errQueryAdjacentConsFailed
errConstraintNotFound = 1120
errQueryConstraintFailed
errSetDBBeforeLoad
errLoadDataFailed
errLoadRsInArrayFailed
errConstraintsForStepFailed
errPreConstraintsForStepFailed
errPostConstraintsForStepFailed
errExecuteConstraintMethodFailed
errIdOrKeyMandatory
errInListFailed = 1130
errUnableToWriteChanges
errQuickSortFailed
errCheckParentValidFailed
errLogErrorFailed
errCopyListFailed
errConnected
errVersionMismatch
errStepNodeFailed
errWorkspaceSelectedFailed
errIdentifierSelectedFailed = 1140
errCheckForNullFieldFailed
errInstanceInUse
errSetVisiblePropertyFailed
errExportWspFailed
errMakeKeyValidFailed
errDummy16
errRunApplicationFailed
errStepLabelUnique
errDeleteSingleFile
errMakeIdentifierValidFailed = 1150
errTypeOfNodeFailed
errConstraintCommandFailed
errOpenDbFailed
errInsertNewConstraintsFailed
errLoadPostExecutionStepsFailed
errLoadPreExecutionStepsFailed
errCreateNewNodeFailed
errDeleteNodeFailed
errDisplayPopupFailed
errDisplayPropertiesFailed = 1160
errUnableToCreateNewObject
errDiffFailed
errLoadWorkspaceFailed
errTerminateProcessFailed
errCompareFailed
errCreateConnectionFailed
errShowFormFailed
errAbortFailed
errDeleteParameterFailed
errUpdateViewFailed = 1170
errParameterNewFailed
errCopyNodeFailed
errCutNodeFailed
errCheckObjectValidFailed
errDeleteViewNodeFailed
errMainFailed
errNewStepFailed
errProcessStepModifyFailed
errCustomizeStepFormFailed
errInitializeStepFormFailed = 1180
errInsertStepFailed
errIncVersionYFailed
errIncVersionXFailed
errShowCreateStepFormFailed
errShowStepFormFailed
errStepNewFailed
errUnableToApplyChanges
errUnableToCommitChanges
errGetStepNodeTextFailed
errSelectGlobalRunMethodFailed = 1190
errConnectionNameMandatory
errUpdateStepFailed
errBrowseFailed
errDummy4
errDummy1
errDummy2
errDummy
errUnableToPreviewFile
errCopyWorkspaceFailed
errCopyParameterFailed = 1200
errGetStepTypeAndPositionFailed
errCopyStepFailed
errMandatoryParameterMissing
errDeleteWorkspaceRecordsFailed
errCreateDirectoryFailed
errConfirmDeleteOrMoveFailed
errCreateWorkspaceFailed
errTypeOfObjectFailed
errCreateNodeFailed
errCreateParameterFailed = 1210
errInsertParameterFailed
errCreateStepFailed
errNoConstraintsCreated
errCopyFailed
errCloneFailed
errCloneGlobalFailed
errCloneWorkerFailed
errCloneManagerFailed
errLetStepTypeFailed
errUnableToCloseWorkspace = 1220
errUnableToModifyWorkspace
```


© 2006 Hewlett-Packard Company. All rights reserved.

```
    errUnableToCreateWorkspace
    errAddArrayElementFailed
    errUpdateSequenceFailed
    errCannotCopySubSteps
    errSubStepsFailed
    errModifyInArrayFailed
    errUpdateParentVersionFailed
    errGetNodeTextFailed
    errAddToArrayFailed = 1230
    errDeleteFromArrayFailed
    errQueryIndexFailed
    errCreateNewConstraintVersionFailed
    errGetRootNodeFailed
    errPopulateWspDetailsFailed
    errLoadRsInTreeFailed
    errAddNodeToTreeFailed
    errMaxTempFiles
    errMoveFailed
    errRootNodeKeyInvalid = 1240
    errNextNodeFailed
    errBranchWillMove
    errMoveBranchInvalid
    errCreateIdRecordsetFailed
    errIdentifierColumnFailed
    errGetIdentifierFailed
    errGetStepTypeFailed
    errUpdateConstraintSeqFailed
    errDelParamsInWspFailed
    errDuplicateConnectionName = 1250
    errOpenWorkspaceFailed
    errShowWorkspaceNewFailed
    errShowWorkspaceModifyFailed
    errPopulateListFailed
    errExploreNodeFailed
    errInitializeListNodeFailed
    errMakeListColumnsFailed
    errRefreshViewFailed
    errExploreFailed
    errCollapseNodeFailed = 1260
    errUnableToProcessListViewClick
    errSetEnabledForStepFailed
    errDisplayStepFormFailed
    errSetEnabledPropertyFailed
    errInvalidDB
    errDeleteConnectionFailed
    errInvalidOperation
    errLetOperationFailed
    errIdGetFailed
    errCommitFailed = 1270
    errSaveParametersInWspFailed
    errDeleteArrayElementFailed
    errSaveWorkspaceFailed
    errInitializeFailed
    errLoadInArrayFailed
    errSaveStepsInWspFailed
    errCommitStepFailed
    errStepIdGetFailed
    errUnloadFromArrayFailed
    errValidateFailed = 1280
    errTextEnteredFailed
    errStepLabelMandatory
    errTextAndFileNullForManager
    errFailureDetailsNullForMgr
    errSetTabOrderFailed
    errSaveWspConstraintsFailed
    errCommitConstraintFailed
    errUnloadStepConstraintsFailed
    errUnableToModifyMenu
    errConfirmFailed = 1290
    errInitSubItemsFailed
    errUpdateListNodeFailed
    errAddNodeFailed
    errLoadListNodeFailed
    errAddListNodeFailed
    errExecutionFailed
    errSetListViewStyleFailed
    errSetCheckedFailed
    errGetCheckedFailed
    errUnableToProcessListViewDblClick = 1300
    errDefaultPosition
    errShellFailed
    errOpenFileFailed
    errSetTBar97Failed
    errConnectFailed
    errApiFailed
    errRegEntryInvalid
    errParseStringFailed
    errConstraintsForWspFailed
    errPostConstraintsForWspFailed = 1310
    errPreConstraintsForWspFailed
    errLoadWspPostExecStepsFailed
    errLoadWspPreExecStepsFailed
    errLoadConstraintsOnFormFailed
    errQueryFailed
    errPasteNodeFailed
    errShowAllWorkspacesFailed
    errMakeFieldValidFailed
    errInitializeTree
    errRootNodeFailed = 1320
    errDirectionInvalid
    errUnableToDetListProperty
    errUnableToGetListData
    errItemNotFound
    errItemDoesNotExist
    errParamNameInvalid
    errGetParamValueFailed
    errSubValuesFailed
    errStringOpFailed
    errReadWorkspaceDataFailed = 1330
    errUpdateRunDataFailed
    errProgramError
    errUnableToOpenFile
    errLoadRunDataFailed
    errExecuteODBCCommandFailed
    errRunWorkspaceFailed
    errExecuteStepFailed
    errUnableToWriteError
    errRunStepFailed
    errSaveChanges = 1340
    errDragDropFailed
    errInvalidParameter
    errAssignParametersFailed
    errLoadLabelsInTreeFailed
    errInstrRFailed
    errInsertIteratorFailed
    errDeleteIteratorFailed
    errTypeInvalid
    errLoadFailed
    errDeleteFailed = 1350
    errModifyFailed
    errIteratorsFailed
    errInsertFailed
    errUpdateFailed
    errDuplicateIterator
    errSaveFailed
    errReadDataFailed
    errUnloadFailed
    errAddFailed
    errExecuteBranchFailed = 1360
    errRangeNumeric
    errRangeInvalid
    errNextStepFailed
    errUpdateDisplayFailed
    errDateToStringFailed
    errGetElapsedTimeFailed
    errMaxProcessesExceeded
    errInvalidProperty
    errInvalidChild
    errCreateInstanceFailed = 1370
    errInvalidForWorker
    errInstanceOpFailed
    errNavInstancesFailed
    errIterateFailed
    errExecInstanceFailed
    errDupIterator
End Enum
```

SMRunOnly.vbw

```
Startup = 0, 0, 0, 0, C
Public = 0, 0, 0, 0, C
cAsyncShell = 0, 0, 0, 0, C
cFailedStep = 0, 0, 0, 0, C
cFailedSteps = 0, 0, 0, 0, C
cInstance = 0, 0, 0, 0, C
cStep = 0, 0, 0, 0, C
cArrConstraints = 0, 0, 0, 0, C
cArrParameters = 0, 0, 0, 0, C
cArrSteps = 0, 0, 0, 0, C
cNodeCollections = 0, 0, 0, 0, C
cParameter = 0, 0, 0, 0, C
cSequence = 0, 0, 0, 0, C
cStringSM = 0, 0, 0, 0, C
cIterator = 0, 0, 0, 0, C
cNode = 0, 0, 0, 0, C
cConstraint = 0, 0, 0, 0, C
cRunColIt = 0, 0, 0, 0, C
cStack = 0, 0, 0, 0, C
cVector = 0, 0, 0, 0, C
cRunItNode = 0, 0, 0, 0, C
cSubSteps = 0, 0, 0, 0, C
cSubStep = 0, 0, 0, 0, C
cRunItDetails = 0, 0, 0, 0, C
cFileSM = 0, 0, 0, 0, C
cVBErrorsSM = 0, 0, 0, 0, C
```


© 2006 Hewlett-Packard Company. All rights reserved.

```
SMErr = 0, 0, 0, 0, C
cTimerSM = 0, 0, 0, 0, C
DatabaseSM = 0, 0, 0, 0, C
DebugSM = 0, 0, 0, 0, C
MsgConfirm = 0, 0, 0, 0, C
cWorkspace = 0, 0, 0, 0, C
OpenFiles = 0, 0, 0, 0, C
cFileInfo = 0, 0, 0, 0, C
cVectorStr = 0, 0, 0, 0, C
SortSM = 0, 0, 0, 0, C
cRunWorkspace = 0, 0, 0, 0, C
cRunInst = 0, 0, 0, 0, C
cStepTree = 0, 0, 0, 0, C
cInstances = 0, 0, 0, 0, C
cVectorLng = 0, 0, 0, 0, C
cRunStep = 0, 0, 0, 0, C
cManager = 0, 0, 0, 0, C
cWorker = 0, 0, 0, 0, C
cGlobalStep = 0, 0, 0, 0, C
cRunOnly = 0, 0, 0, 0, C
ShellSM = 0, 0, 0, 0, C
TimerSM = 0, 0, 0, 0, C
frmSplash = 0, 0, 0, 0, C, 132, 174, 863, 764, C
WindowsApiCommon = 0, 0, 0, 0, C
StepCommon = 0, 0, 0, 0, C
FileCommon = 0, 0, 0, 0, C
WorkspaceCommon = 0, 0, 0, 0, C
IteratorCommon = 0, 0, 0, 0, C
ParameterCommon = 0, 0, 0, 0, C
Common = 0, 0, 0, 0, C
cTermSteps = 0, 0, 0, 0, C
cTermProcess = 0, 0, 0, 0, C
cTermStep = 0, 0, 0, 0, C
RunInstHelper = 0, 0, 0, 0, C
cConnections = 0, 0, 0, 0, C
cConnection = 0, 0, 0, 0, C
ToolsCommon = 0, 0, 0, 0, C
ConnectionCommon = 0, 0, 0, 0, C
cConnDtl = 0, 0, 0, 0, C
cConnDtls = 0, 0, 0, 0, C
ConnDtlCommon = 0, 0, 0, 0, C
RunCommon = 0, 0, 0, 0, C
frmWorkspaceOpen = 0, 0, 0, 0, C, 176, 232, 907, 822,
C
```

SortSM.bas

```
Attribute VB_Name = "SortSM"
'  FILE:       SortSM.bas
'              Microsoft TPC-H Kit Ver. 1.00
'              Copyright Microsoft, 1999
'              All Rights Reserved
'
'
'  PURPOSE:    This module contains an implementation
of QuickSort.
'  Contact:    Reshma Tharamal
(reshmat@microsoft.com)
'
Option Explicit

' Comment out for case-sensitive sorts
Option Compare Text

' Used to indicate the source module name when errors
' are raised by this module
Private Const mstrModuleName As String = "SortSM."

Private Function Compare(ByVal vntToCompare1 As
Variant, _
        ByVal vntToCompare2 As Variant) As Integer

    On Error GoTo CompareErr

    Compare = 0

    If vntToCompare1.SequenceNo <
vntToCompare2.SequenceNo Then
        Compare = -1
    ElseIf vntToCompare1.SequenceNo >
vntToCompare2.SequenceNo Then
        Compare = 1
    End If

    Exit Function

CompareErr:
    ' Log the error code raised by Visual Basic
    Call LogErrors(Errors)
    On Error GoTo 0
    Err.Raise vbObjectError + errCompareFailed, _
            gstrSource, _
            LoadResString(errCompareFailed)

End Function

Private Sub Swap(ByRef vntToSwap1 As Variant, _
        ByRef vntToSwap2 As Variant)

    Dim vntTemp As Variant

    On Error GoTo SwapErr

    If IsObject(vntToSwap1) And IsObject(vntToSwap2)
Then
        Set vntTemp = vntToSwap1
        Set vntToSwap1 = vntToSwap2
        Set vntToSwap2 = vntTemp
    Else
        vntTemp = vntToSwap1
        vntToSwap1 = vntToSwap2
        vntToSwap2 = vntTemp
    End If

    Exit Sub

SwapErr:
    ' Log the error code raised by Visual Basic
    Call LogErrors(Errors)
    On Error GoTo 0
    Err.Raise vbObjectError + errQuickSortFailed,
mstrModuleName & "Swap", _
        LoadResString(errQuickSortFailed)

End Sub

Public Sub QuickSort(vntArray As Variant, _
        Optional ByVal intLBound As Integer, _
        Optional ByVal intUBound As Integer)
    ' Sorts a variant array using Quicksort

    Dim i As Integer
    Dim j As Integer
    Dim vntMid As Variant

    On Error GoTo QuickSortErr

    If IsEmpty(vntArray) Or _
            Not IsArray(vntArray) Then
        Exit Sub
    End If

    ' Set default boundary values for first time
through
    If intLBound = 0 And intUBound = 0 Then
        intLBound = LBound(vntArray)
        intUBound = UBound(vntArray)
    End If

    ' BugMessage "Sorting elements " & Str(intLBound)
& " and " & Str(intUBound)

    If intLBound > intUBound Then
        Exit Sub
    End If

    ' Only two elements in this subdivision; exchange
if they
    ' are out of order and end recursive calls
    If (intUBound - intLBound) = 1 Then
        If Compare(vntArray(intLBound),
vntArray(intUBound)) > 0 Then
            Call Swap(vntArray(intLBound),
vntArray(intUBound))
        End If
        Exit Sub
    End If

    ' Set the pivot point
    Set vntMid = vntArray(intUBound)
    i = intLBound
    j = intUBound

    Do
        ' Move in from both sides towards pivot
element
        Do While (i < j) And Compare(vntArray(i),
vntMid) <= 0
            i = i + 1
        Loop

        Do While (j > i) And Compare(vntArray(j),
vntMid) >= 0
            j = j - 1
        Loop

        If i < j Then
            Call Swap(vntArray(i), vntArray(j))
```


© 2006 Hewlett-Packard Company. All rights reserved.

```
        End If
    Loop While i < j

    ' Since i has been adjusted, swap element i with
element,
    ' intUBound
    Call Swap(vntArray(i), vntArray(intUBound))

    ' Recursively call sort array - pass smaller
subdivision
    ' first to conserve stack space
    If (i - intLBound) < (intUBound - 1) Then
        ' Recursively sort with adjusted values for
upper and
        ' lower bounds
        Call QuickSort(vntArray, intLBound, i - 1)
        Call QuickSort(vntArray, i + 1, intUBound)
    Else
        Call QuickSort(vntArray, i + 1, intUBound)
        Call QuickSort(vntArray, intLBound, i - 1)
    End If
    Exit Sub

QuickSortErr:
    Call LogErrors(Errors)
    On Error GoTo 0
    Err.Raise vbObjectError + errQuickSortFailed,
mstrModuleName & "QuickSort", _
        LoadResString(errQuickSortFailed)

End Sub
```

startup.bas

```
Attribute VB_Name = "Startup"
'  FILE:       Startup.bas
'              Microsoft TPC-H Kit Ver. 1.00
'              Copyright Microsoft, 1999
'              All Rights Reserved
'
'
'  PURPOSE:    This module contains startup and
cleanup functions for the project.
'  Contact:    Reshma Tharamal
(reshmat@microsoft.com)
'
Option Explicit

Public Const LISTVIEW_BUTTON = 14

Public gstrProjectPath As String

' Used to indicate the source module name when errors
' are raised by this module
Private Const mstrModuleName As String = "Startup."

Private Sub Initialize()

    On Error GoTo InitializeErr

    ReDim gsContCriteria(gintOnFailureAbort To
gintOnFailureAsk) As String
    gsContCriteria(gintOnFailureAbort) = "Abort"
    gsContCriteria(gintOnFailureContinue) =
"Continue"
    gsContCriteria(gintOnFailureCompleteSiblings) =
"Execute sibling steps and stop"
    gsContCriteria(gintOnFailureAbortSiblings) =
"Abort sibling steps and execute next parent"
    gsContCriteria(gintOnFailureSkipSiblings) = "Skip
sibling steps and execute next parent"
    gsContCriteria(gintOnFailureAsk) = "Ask"

    ReDim gsExecutionStatus(gintDisabled To
gintAborted) As String
    gsExecutionStatus(gintDisabled) = "Disabled"
    gsExecutionStatus(gintPending) = "Pending"
    gsExecutionStatus(gintRunning) = "Running"
    gsExecutionStatus(gintComplete) = "Complete"
    gsExecutionStatus(gintFailed) = "Failed"
    gsExecutionStatus(gintAborted) = "Stopped"

#If Not RUN_ONLY Then
    ' Call a procedure to change the style of the
toolbar
    ' on the Step Properties form
    Call SetTBar97(frmSteps.tblConstraintCommands)

#End If

    Call InitRunEngine

    Exit Sub

InitializeErr:
    ' Log the error code raised by Visual Basic
    Call LogErrors(Errors)
    gstrSource = mstrModuleName & "Initialize"
    Call ShowError(errInitializeFailed)

End Sub
Sub Main()

    On Error GoTo MainErr

    ' Mousepointer should indicate busy
    Call ShowBusy

    ' Display the Splash screen while we carry out
some initialization
    frmSplash.Show
    frmSplash.Refresh

    gstrProjectPath = App.Path

    ' Open the database
    If OpenDBFile() = False Then
        Unload frmSplash
        Exit Sub
    End If

#If Not RUN_ONLY Then
    Load frmMain

    ' Enable the Stop Run menu options only when a
workspace is
    ' actually running
    Call EnableStop(False)

    ' Clear all application extension menu items
    Call ClearToolsMenu
#End If

    Call Initialize

    ' Mousepointer - ready to accept user input
    Call ShowFree

    ' Unload the Splash screen and display the main
form
    Unload frmSplash

#If RUN_ONLY Then
    frmWorkspaceOpen.Caption = gsCaptionRunWsp

    Call ShowWorkspacesInDb(dbsAttTool)
#Else
    frmMain.Show
#End If

    Exit Sub

MainErr:
    ' Log the error code raised by Visual Basic
    Call LogErrors(Errors)
    Call ShowFree
    Call ShowError(errMainFailed)

End Sub
Private Function OpenDBFile() As Boolean
    Dim sDb As String

    On Error GoTo OpenDBFileErr

#If RUN_ONLY Then
    ' Always use the registry setting for the
run_only mode
    sDb = DefaultDBFile()
#Else
    ' Check if the user has specified the workspace
defn. file to open on the command line
    ' Else, use the registry setting
    sDb = IIf(StringEmpty(Command), DefaultDBFile(),
Command)

    If Len(sDb) > 0 Then
        ' Trim off the enclosing double-quotes if any
        If Mid(sDb, 1, 1) = gstrDQ Then
            If Len(sDb) > 1 Then
                sDb = Mid(sDb, 2)
            Else
                sDb = gstrEmptyString
            End If
        End If
    End If

    If Len(sDb) > 0 Then
```


© 2006 Hewlett-Packard Company. All rights reserved.

```
        If Mid(sDb, Len(sDb), 1) = gstrDQ Then
            If Len(sDb) > 1 Then
                sDb = Mid(sDb, 1, Len(sDb) - 1)
            Else
                sDb = gstrEmptyString
            End If
        End If
    End If
#End If

    ' Open the database
    OpenDBFile = SMOpenDatabase(sDb)

    Exit Function

OpenDBFileErr:
    Call LogErrors(Errors)
    OpenDBFile = False

End Function
Public Sub Cleanup()

    On Error GoTo CleanupErr

    ' Set the mousepointer to indicate Busy
    Call ShowBusy

#If Not RUN_ONLY Then
    ' Close all open workspaces - will also prompt
for unsaved
    ' changes
    Call CloseOpenWorkspaces
#End If

    ' Close all open files
    Call CloseOpenFiles

    ' Reset the mousepointer
    Call ShowFree

    Exit Sub

CleanupErr:
    ' Log the error code raised by Visual Basic
    Call LogErrors(Errors)
    Resume Next

End Sub
```

StepCommon.bas

```
Attribute VB_Name = "StepCommon"
'  FILE:       StepCommon.bas
'              Microsoft TPC-H Kit Ver. 1.00
'              Copyright Microsoft, 1999
'              All Rights Reserved
'
'
'  PURPOSE:    Contains functionality common across
StepMaster and
'              SMRunOnly, pertaining to steps
'              Specifically, functions to load
iterators records
'              in an array, determine the type of
step, etc.
'  Contact:    Reshma Tharamal
(reshmat@microsoft.com)
'
Option Explicit

' Used to indicate the source module name when errors
' are raised by this module
Private Const mstrModuleName As String =
"StepCommon."

' Step property constants
Private Const mintMinFailureThreshold As Integer = 1
Public Const gintMinSequenceNo As Integer = 1
Public Const gintMinLevel As Integer = 0
Public Function ValidateParallelism(sParallelism As
String, lWorkspace As Long, _
        Optional ParamsInWsp As cArrParameters =
Nothing) As String
    ' Returns the degree of parallelism for the step
if the user input is valid
    Dim sTemp As String

    On Error GoTo ValidateParallelismErr
    gstrSource = mstrModuleName &
"ValidateParallelism"

    sTemp = SubstituteParameters(Trim$(sParallelism),
lWorkspace, WspParameters:=ParamsInWsp)

    If Not IsNumeric(sTemp) Then
        ShowError errInvalidDegParallelism
        On Error GoTo 0
        Err.Raise vbObjectError +
errInvalidDegParallelism, gstrSource, _

LoadResString(errInvalidDegParallelism)
    Else
        If (CInt(sTemp) < gintMinParallelism) Or
(CInt(sTemp) > gintMaxParallelism) Then
            ShowError errInvalidDegParallelism
            On Error GoTo 0
            Err.Raise vbObjectError +
errInvalidDegParallelism, gstrSource, _

LoadResString(errInvalidDegParallelism)
        Else
            ValidateParallelism = Trim$(sParallelism)
        End If
    End If

    Exit Function

ValidateParallelismErr:
    ' Log the error code raised by Visual Basic
    gstrSource = mstrModuleName &
"ValidateParallelism"
    If Err.Number = vbObjectError +
errSubValuesFailed Then
        ShowError errInvalidDegParallelism
    End If

    Call LogErrors(Errors)
    On Error GoTo 0
    Err.Raise vbObjectError +
errInvalidDegParallelism, gstrSource, _
        LoadResString(errInvalidDegParallelism)

End Function

Public Function IsGlobal( _
        Optional ByVal StepClass As cStep = Nothing,
_
        Optional ByVal StepRecord As Recordset =
Nothing, _
        Optional ByVal StepKey As String =
gstrEmptyString, _
        Optional ByVal StepId As Long = 0, _
        Optional StepForm As Form = Nothing) As
Boolean

    ' This function contains all the possible checks
for whether
    ' a step is global - The check that will be made
depends on
    ' the parameter passed in

    Dim cStepRecord As cStep

    If Not StepClass Is Nothing Then
        IsGlobal = StepClass.GlobalFlag
        Exit Function
    End If

    If Not StepRecord Is Nothing Then
        IsGlobal = StepRecord![global_flag]
        Exit Function
    End If

    If Not StringEmpty(StepKey) Then
        IsGlobal = InStr(StepKey,
gstrGlobalStepPrefix) > 0
        Exit Function
    End If

    If StepId <> 0 Then
        Set cStepRecord = gcSteps.QueryStep(StepId)
        IsGlobal = cStepRecord.GlobalFlag
        Set cStepRecord = Nothing
        Exit Function
    End If

    If Not StepForm Is Nothing Then
        IsGlobal = (StepForm.lblStepType.Caption =
Str(gintGlobalStep))
        Exit Function
    End If

    ' Not a single object was passed in! - raise an
error
```


© 2006 Hewlett-Packard Company. All rights reserved.

```
    On Error GoTo 0
    Err.Raise vbObjectError + errObjectMandatory, _
            mstrModuleName & "IsGlobal", _
            LoadResString(errObjectMandatory)

End Function
Public Function TypeOfStep(Optional ByVal StepClass
As cStep = Nothing, _
        Optional ByVal StepRecord As Recordset =
Nothing, _
        Optional ByVal StepKey As String =
gstrEmptyString, _
        Optional ByVal StepId As Long = 0, _
        Optional StepForm As Form = Nothing) As
Integer
    ' Calls functions to determine the type of step
    ' The check that will be made depends on the
parameter passed in

    On Error GoTo TypeOfStepErr

    ' Make the check whether a step is global first -
both
    ' worker and global steps have the step text or
file name
    ' not null - but only the global step will have
the global
    ' flag set
    If IsGlobal(StepClass, StepRecord, StepKey,
StepId, StepForm) Then
        TypeOfStep = gintGlobalStep
    ElseIf IsManager(StepClass, StepRecord, StepKey,
StepId, StepForm) Then
        TypeOfStep = gintManagerStep
    ElseIf IsWorker(StepClass, StepRecord, StepKey,
StepId, StepForm) Then
        TypeOfStep = gintWorkerStep
    Else
        On Error GoTo 0
        Err.Raise vbObjectError + errInvalidStep, _
                mstrModuleName & "TypeOfStep", _
                LoadResString(errInvalidStep)
    End If

    Exit Function

TypeOfStepErr:
    ' Log the error code raised by Visual Basic
    Call LogErrors(Errors)
    On Error GoTo 0
    Err.Raise vbObjectError + errTypeOfStepFailed, _
            mstrModuleName & "TypeOfStep", _
            LoadResString(errTypeOfStepFailed)

End Function

Public Function IsStep(intNodeType As Integer) As
Boolean
    ' Returns true if the node type corresponds to a
global, manager
    ' or worker step
    IsStep = (intNodeType = gintGlobalStep) Or
(intNodeType = gintManagerStep) Or _
        (intNodeType = gintWorkerStep)

End Function

Public Function IsManager(Optional ByVal StepClass As
cStep = Nothing, _
        Optional ByVal StepRecord As Recordset =
Nothing, _
        Optional ByVal StepKey As String =
gstrEmptyString, _
        Optional ByVal StepId As Long = 0, _
        Optional StepForm As Form = Nothing) As
Boolean

    ' This function contains all the possible checks
for whether
    ' a step is a manager step - The check that will
be made depends
    ' on the parameter passed in

    Dim cStepRecord As cStep

    If Not StepClass Is Nothing Then
        IsManager = (StepClass.StepType =
gintManagerStep)
        Exit Function
    End If

    If Not StepRecord Is Nothing Then
        IsManager = (IsNull(StepRecord![step_text])
And IsNull(StepRecord![step_file_name]))
        Exit Function
    End If

    If Not StringEmpty(StepKey) Then
        IsManager = (InStr(StepKey,
gstrManagerStepPrefix) > 0)
        Exit Function
    End If

    If StepId <> 0 Then
        Set cStepRecord = gcSteps.QueryStep(StepId)
        IsManager = (cStepRecord.StepType =
gintManagerStep)
        Set cStepRecord = Nothing
        Exit Function
    End If

    If Not StepForm Is Nothing Then
        IsManager = (StepForm.lblStepType.Caption =
Str(gintManagerStep))
        Exit Function
    End If

    ' Not a single object was passed in! - raise an
error
    On Error GoTo 0
    Err.Raise vbObjectError + errObjectMandatory, _
            "Step.IsManager", _
            LoadResString(errObjectMandatory)

End Function
Public Function IsWorker( _
        Optional ByVal StepClass As cStep = Nothing,
_
        Optional ByVal StepRecord As Recordset =
Nothing, _
        Optional ByVal StepKey As String =
gstrEmptyString, _
        Optional ByVal StepId As Long = 0, _
        Optional StepForm As Form = Nothing) As
Boolean

    ' This function contains all the possible checks
for whether
    ' a step is a Worker step - The check that will
be made depends
    ' on the parameter passed in

    Dim cStepRecord As cStep

    If Not StepClass Is Nothing Then
        IsWorker = (StepClass.StepType =
gintWorkerStep)
        Exit Function
    End If

    If Not StepRecord Is Nothing Then
        IsWorker = (Not StepRecord![global_flag] And
_
                (Not IsNull(StepRecord![step_text])
Or Not IsNull(StepRecord![step_file_name])))
        Exit Function
    End If

    If Not StringEmpty(StepKey) Then
        IsWorker = InStr(StepKey,
gstrWorkerStepPrefix) > 0
        Exit Function
    End If

    If StepId <> 0 Then
        Set cStepRecord = gcSteps.QueryStep(StepId)
        IsWorker = (cStepRecord.StepType =
gintWorkerStep)
        Set cStepRecord = Nothing
        Exit Function
    End If

    If Not StepForm Is Nothing Then
        IsWorker = (StepForm.lblStepType.Caption =
Str(gintWorkerStep))
        Exit Function
    End If

    ' Not a single object was passed in! - raise an
error
    On Error GoTo 0
    Err.Raise vbObjectError + errObjectMandatory, _
            "Step.IsWorker", _
            LoadResString(errObjectMandatory)

End Function
Public Function GetStepNodeText(ByVal cStepNode As
cStep) As String
```


© 2006 Hewlett-Packard Company. All rights reserved.

```
    On Error GoTo GetStepNodeTextErr

    ' Returns the string that will be displayed as
the text
    ' in the tree view node to the user
    If StringEmpty(cStepNode.StepLabel) Then

        If StringEmpty(cStepNode.StepTextFile) Then

            If StringEmpty(cStepNode.StepText) Then
                ' This should never happen
                On Error GoTo 0
                Err.Raise vbObjectError +
errStepLabelTextAndFileNull, _
                    gstrSource, _

LoadResString(errStepLabelTextAndFileNull)
            Else
                GetStepNodeText = cStepNode.StepText
            End If
        Else
            GetStepNodeText = cStepNode.StepTextFile
        End If
    Else
        GetStepNodeText = cStepNode.StepLabel
    End If

    Exit Function

GetStepNodeTextErr:
    ' Log the error code raised by Visual Basic
    Call LogErrors(Errors)
    On Error GoTo 0
    Err.Raise vbObjectError +
errGetStepNodeTextFailed, _
            gstrSource, _
            LoadResString(errGetStepNodeTextFailed)

End Function

Public Function LoadRecordsetInStepsArray(rstSteps As
Recordset, _
    cStepCol As cArrSteps) As Boolean

    Dim cNewStep As cStep
    Dim cNewGlobal As cGlobalStep
    Dim cNewManager As cManager
    Dim cNewWorker As cWorker

    On Error GoTo LoadRecordsetInStepsArrayErr

    If rstSteps.RecordCount = 0 Then
        Exit Function
    End If

    rstSteps.MoveFirst
    While Not rstSteps.EOF
        ' For fields that should not be null, a
procedure is first
        ' called to raise an error if the field is
null

        Set cNewStep = New cStep

        cNewStep.StepType =
TypeOfStep(StepRecord:=rstSteps)

        If cNewStep.StepType = gintGlobalStep Then
            Set cNewGlobal = New cGlobalStep
            Set cNewStep = cNewGlobal
        ElseIf cNewStep.StepType = gintManagerStep
Then
            Set cNewManager = New cManager
            Set cNewStep = cNewManager
        Else
            Set cNewWorker = New cWorker
            Set cNewStep = cNewWorker
        End If

        ' Initialize the global flag first, since
subsequent
        ' validations might depend on whether the
step is global
        cNewStep.GlobalFlag =
CBool(ErrorOnNullField(rstSteps, "global_flag"))

        ' Initialize step values
        cNewStep.StepId =
CLng(ErrorOnNullField(rstSteps, "step_id"))
        cNewStep.VersionNo =
CStr(ErrorOnNullField(rstSteps, "version_no"))

        cNewStep.StepLabel =
CheckForNullField(rstSteps, "step_label")
        cNewStep.StepTextFile =
CheckForNullField(rstSteps, "step_file_name")
        cNewStep.StepText =
CheckForNullField(rstSteps, "step_text")
        cNewStep.StartDir =
CheckForNullField(rstSteps, "start_directory")

        cNewStep.WorkspaceId =
CLng(ErrorOnNullField(rstSteps, FLD_ID_WORKSPACE))
        cNewStep.ParentStepId =
CLng(ErrorOnNullField(rstSteps, "parent_step_id"))
        cNewStep.ParentVersionNo =
CStr(ErrorOnNullField(rstSteps, "parent_version_no"))

        cNewStep.SequenceNo =
CInt(ErrorOnNullField(rstSteps, "sequence_no"))
        cNewStep.StepLevel =
CInt(ErrorOnNullField(rstSteps, "step_level"))
        cNewStep.EnabledFlag =
CBool(ErrorOnNullField(rstSteps, "enabled_flag"))

        ' Initialize the execution details for the
step
        cNewStep.DegreeParallelism =
CheckForNullField(rstSteps, "degree_parallelism")
        cNewStep.ExecutionMechanism =
CInt(ErrorOnNullField(rstSteps,
"execution_mechanism"))
        cNewStep.FailureDetails =
CheckForNullField(rstSteps, "failure_details")

        cNewStep.ContinuationCriteria =
CInt(ErrorOnNullField(rstSteps,
"continuation_criteria"))

        ' Initialize the output file locations for
the step
        cNewStep.OutputFile =
CheckForNullField(rstSteps, "output_file_name")
        ' cNewStep.LogFile =
CheckForNullField(rstSteps, "log_file_name")
        cNewStep.ErrorFile =
CheckForNullField(rstSteps, "error_file_name")

        ' Initialize the iterator name for the step,
if any
        cNewStep.IteratorName =
CheckForNullField(rstSteps, "iterator_name")

        ' Add this record to the array of steps
        cStepCol.Load cNewStep

        Set cNewStep = Nothing
        rstSteps.MoveNext
    Wend

    Exit Function

LoadRecordsetInStepsArrayErr:

    LogErrors Errors
    gstrSource = mstrModuleName &
"LoadRecordsetInStepsArray"
    On Error GoTo 0
    Err.Raise vbObjectError + errLoadRsInArrayFailed,
gstrSource, _
            LoadResString(errLoadRsInArrayFailed)

End Function
```

TimerSM.bas

```
Attribute VB_Name = "TimerSM"
'  FILE:       TimerSM.bas
'              Microsoft TPC-H Kit Ver. 1.00
'              Copyright Microsoft, 1999
'              All Rights Reserved
'
'
'  PURPOSE:    This module contains wrapper functions
for Timer APIs.
'  Contact:    Reshma Tharamal
(reshmat@microsoft.com)
'

Option Explicit

Private Declare Function SetTimer Lib "user32" (ByVal
hWnd As Long, _
    ByVal nIDEvent As Long, ByVal uElapse As Long,
ByVal lpTimerFunc As Long) _
```


© 2006 Hewlett-Packard Company. All rights reserved.

```
    As Long
Private Declare Function KillTimer Lib "user32"
(ByVal hWnd As Long, _
    ByVal nIDEvent As Long) As Long
Private Declare Sub CopyMemory Lib "kernel32" Alias
"RtlMoveMemory" ( _
    pDest As Any, pSource As Any, ByVal ByteLen As
Long)

Public gcTimerObjects As Collection

Private Sub TimerProc(ByVal lHwnd As Long, ByVal lMsg
As Long, _
    ByVal lTimerID As Long, ByVal lTime As Long)

    Dim nPtr As Long
    Dim oTimerObject As cTimerSM

    'Create a Timer object from the pointer
    nPtr = gcTimerObjects.Item(Str$(lTimerID))
    CopyMemory oTimerObject, nPtr, 4
    'Call a method which will fire the Timer event
    oTimerObject.Tick
    'Get rid of the Timer object so that VB will not
try to release it
    CopyMemory oTimerObject, 0&, 4
End Sub

Public Function StartTimer(lInterval As Long) As Long
    StartTimer = SetTimer(0, 0, lInterval, AddressOf
TimerProc)
End Function

Public Sub StopTimer(lTimerID As Long)
    KillTimer 0, lTimerID
End Sub

Public Sub SetInterval(lInterval As Long, lTimerID As
Long)
    SetTimer 0, lTimerID, lInterval, AddressOf
TimerProc
End Sub
```

ToolsCommon.bas

```
Attribute VB_Name = "ToolsCommon"
'  FILE:       ToolsCommon.bas
'              Microsoft TPC-H Kit Ver. 1.00
'              Copyright Microsoft, 1999
'              All Rights Reserved
'
'
'  PURPOSE:    Contains functions to remove run
history and initialize
'              table creation scripts
'  Contact:    Reshma Tharamal
(reshmat@microsoft.com)
'
Option Explicit

Public sCreateTables() As String

Public Const gsExtSeparator As String = "."

Public Sub DeleteRunHistory(dbFile As DAO.Database)
    ' Delete all run history records from the
database, viz. the records in
    ' run_header, run_step_details and run_parameters

    Dim sDelete As String

    On Error GoTo DeleteRunHistoryErr

    sDelete = "delete from run_header "
    dbFile.Execute sDelete, dbFailOnError

    sDelete = "delete from run_step_details "
    dbFile.Execute sDelete, dbFailOnError

    sDelete = "delete from run_parameters "
    dbFile.Execute sDelete, dbFailOnError

    sDelete = "update att_identifiers " & _
         " set run_id = " & CStr(glMinId)
    dbFile.Execute sDelete, dbFailOnError

    Exit Sub

DeleteRunHistoryErr:
    LogErrors Errors
    Err.Raise vbObjectError +
errDeleteDBRecordFailed, "DeleteRunHistory", _
            LoadResString(errDeleteDBRecordFailed)

End Sub

Public Function CreateConnectionsTableScript() As
String
    ' Returns the table creation script for the
workspace_connections table

    Call InitCreateSQLArray
    CreateConnectionsTableScript = sCreateTables(10)
    ReDim sCreateTables(0)

End Function
Public Function CreateConnectionDtlsTableScript() As
String
    ' Returns the table creation script for the
connection_dtls table

    Call InitCreateSQLArray
    CreateConnectionDtlsTableScript =
sCreateTables(11)
    ReDim sCreateTables(0)

End Function

Public Sub InitCreateSQLArray()

ReDim sCreateTables(0 To 11)

sCreateTables(0) = "Create table att_identifiers (" &
_
         "workspace_id                Long, " & _
         "parameter_id                Long, " & _
         "step_id                     Long, " & _
         "constraint_id               Long, " & _
         "run_id                      Long, " & _
         "connection_id               Long " & _
         ", " & FLD_ID_CONN_NAME & gstrBlank &
DATA_TYPE_LONG & _
");"

sCreateTables(1) = "Create table att_steps (step_id
Long, " & _
         "version_no                  Text(255), " & _
         "step_label                  Text(255), " & _
         "step_file_name              Text(255), " & _
         "step_text                   Memo, " & _
         "start_directory             Text(255), " & _
         "workspace_id                Long, " & _
         "parent_step_id              Long, " & _
         "parent_version_no           Text(255), " & _
         "step_level                  Long, " & _
         "sequence_no                 Integer, " & _
         "enabled_flag                Bit, " & _
         "degree_parallelism          Text(255), " & _
         "execution_mechanism         Text(50), " & _
         "failure_details             Text(255), " & _
         "continuation_criteria       Text(50), " & _
         "global_flag                 Long, " & _
         "archived_flag               Bit, " & _
         "output_file_name            Text(255), " & _
         "error_file_name             Text(255), " & _
         "iterator_name               Text(255), " & _
         "CONSTRAINT pk_steps PRIMARY KEY (step_id,
version_no) " & _
");"

'         "log_file_name               Text(255), " &
_

sCreateTables(2) = "Create table att_workspaces (" &
_
         "workspace_id                Long, " & _
         "workspace_name              Text(255), " & _
         "archived_flag               Bit, " & _
         "CONSTRAINT pk_workspaces PRIMARY KEY
(workspace_id) " & _
");"

sCreateTables(3) = "Create table iterator_values (" &
_
         "step_id                     Long, " & _
         "version_no                  Text(255), " & _
         "type                        Integer, " & _
         "iterator_value              Text(255), " & _
         "sequence_no                 Integer " & _
");"

sCreateTables(4) = "Create table run_header (" & _
         "run_id                      Long, " & _
         "workspace_id                Long, " & _
         "start_time                  Currency, " & _
```


© 2006 Hewlett-Packard Company. All rights reserved.

```
        "end_time                   Currency, " & _
        "CONSTRAINT pk_run_header PRIMARY KEY
(run_id) " & _
");"

sCreateTables(5) = "Create table run_parameters (" &
_
        "run_id                     Long, " & _
        "parameter_name             Text(255), " & _
        "parameter_value            Text(255) " & _
");"

sCreateTables(6) = "Create table run_step_details ("
& _
        "run_id                     Long, " & _
        "step_id                    Long, " & _
        "version_no                 Text(255), " & _
        "instance_id                Long, " & _
        "parent_instance_id         Long, " & _
        "command                    Memo, " & _
        "iterator_value             Text(255), " & _
        "start_time                 Currency, " & _
        "end_time                   Currency, " & _
        "elapsed_time               Long " & _
");"

sCreateTables(7) = "Create table step_constraints ("
& _
        "constraint_id              Long, " & _
        "step_id                    Long, " & _
        "version_no                 Text(255), " & _
        "constraint_type            Integer, " & _
        "global_step_id             Long, " & _
        "global_version_no          Text(255), " & _
        "sequence_no                Integer " & _
");"

sCreateTables(8) = "Create table workspace_parameters
(" & _
        "workspace_id               Long, " & _
        "parameter_id               Long, " & _
        "parameter_name             Text(255), " & _
        "parameter_value            Text(255), " & _
        "description                Text(255), " & _
        "parameter_type             Integer, " & _
        "CONSTRAINT pk_parameters PRIMARY KEY
(parameter_id) " & _
");"

sCreateTables(9) = "Create table db_details (" & _
        "db_version                 Text(50) " & _
");"

sCreateTables(10) = "Create table " &
TBL_CONNECTION_STRINGS & " (" & _
        "workspace_id               Long, " & _
        "connection_id              Long, " & _
        "connection_name            Text(255), " & _
        "connection_value           Text(255), " & _
        "description                Text(255), " & _
        "no_count_display           Bit, " & _
        "no_execute                 Bit, " & _
        "parse_query_only           Bit, " & _
        "ANSI_quoted_identifiers    Bit, " & _
        "ANSI_nulls                 Bit, " & _
        "show_query_plan            Bit, " & _
        "show_stats_time            Bit, " & _
        "show_stats_io              Bit, " & _
        "parse_odbc_msg_prefixes    Bit, " & _
        "row_count                  long, " & _
        "tsql_batch_separator       Text(255), " & _
        "query_time_out             long, " & _
        "server_language            Text(255), " & _
        "character_translation      Bit, " & _
        "regional_settings          Bit, " & _
        "CONSTRAINT pk_connections PRIMARY KEY
(connection_id) " & _
");"

' This table has been added in order to satisfy the
TPC-H requirement that
' all the queries in a stream need to be executed on
a single connection.
' Specify a connection for each odbc step. If the
connection is of type,
' static, it should be kept open till the step
execution is complete.
sCreateTables(11) = "Create table " &
TBL_CONNECTION_DTLS & " (" & _
        FLD_ID_WORKSPACE & gstrBlank &
DATA_TYPE_LONG & ", " & _
        FLD_ID_CONN_NAME & gstrBlank &
DATA_TYPE_LONG & ", " & _
        FLD_CONN_DTL_CONNECTION_NAME & gstrBlank &
DATA_TYPE_TEXT255 & ", " & _
        FLD_CONN_DTL_CONNECTION_STRING & gstrBlank &
DATA_TYPE_TEXT255 & ", " & _
        FLD_CONN_DTL_CONNECTION_TYPE & gstrBlank &
DATA_TYPE_INTEGER & ", " & _
        "CONSTRAINT pk_connection_name PRIMARY KEY
(" & FLD_ID_CONN_NAME & ") " & _
");"

End Sub
```

WindowsApiCommon.bas

```
Attribute VB_Name = "WindowsApiCommon"
'  FILE:       WindowsApiCommon.bas
'              Microsoft TPC-H Kit Ver. 1.00
'              Copyright Microsoft, 1999
'              All Rights Reserved
'
'
'  PURPOSE:    This module contains functions that
are wrappers around the
'              Windows API and are used by both
StepMaster and SMRunOnly.
'  Contact:    Reshma Tharamal
(reshmat@microsoft.com)
'
Option Explicit

' Used to indicate the source module name when errors
' are raised by this module
Private Const mstrModuleName As String =
"WindowsApiCommon."

Public Type PROCESS_INFORMATION
    hProcess    As Long
    hThread     As Long
    dwProcessID As Long
    dwThreadID  As Long
End Type

' Used by GetShortName to return the short file name
for a given file
Private Declare Function GetShortPathName Lib
"kernel32" _
      Alias "GetShortPathNameA" (ByVal lpszLongPath
As String, _
      ByVal lpszShortPath As String, ByVal cchBuffer
As Long) As Long

Public Declare Function GetExitCodeProcess Lib
"kernel32" ( _
    ByVal hProcess As Long, lpExitCode As Long) As
Long
Public Declare Function TerminateProcess Lib
"kernel32" ( _
        hProcess As Long, uExitCode As Long) As Long
Public Declare Function CloseHandle Lib "kernel32" (
_
    ByVal hObject As Long) As Long

Public Const NORMAL_PRIORITY_CLASS      As Long =
&H20&
Public Const INFINITE                   As Long = -1&

Public Const STATUS_WAIT_0              As Long = &H0
Public Const STATUS_ABANDONED_WAIT_0    As Long =
&H80
Public Const STATUS_USER_APC            As Long =
&HC0
Public Const STATUS_TIMEOUT             As Long =
&H102
Public Const STATUS_PENDING             As Long =
&H103

Public Const WAIT_FAILED                As Long =
&HFFFFFFFF
Public Const WAIT_OBJECT_0              As Long =
STATUS_WAIT_0
Public Const WAIT_TIMEOUT               As Long =
STATUS_TIMEOUT

Public Const WAIT_ABANDONED             As Long =
STATUS_ABANDONED_WAIT_0
Public Const WAIT_ABANDONED_0           As Long =
STATUS_ABANDONED_WAIT_0

Public Const WAIT_IO_COMPLETION         As Long =
STATUS_USER_APC
Public Const STILL_ACTIVE               As Long =
STATUS_PENDING
```


© 2006 Hewlett-Packard Company. All rights reserved.

```
Public Const PROCESS_QUERY_INFORMATION  As Long =
&H400
Public Const STANDARD_RIGHTS_REQUIRED   As Long =
&HF0000

'-----------------------------------------------------
--------------------------
'Declarations for shelling:

Public Type STARTUPINFO
    cb              As Long
    lpReserved      As String
    lpDesktop       As String
    lpTitle         As String
    dwX             As Long
    dwY             As Long
    dwXSize         As Long
    dwYSize         As Long
    dwXCountChars   As Long
    dwYCountChars   As Long
    dwFillAttribute As Long
    dwFlags         As Long
    wShowWindow     As Integer
    cbReserved2     As Integer
    lpReserved2     As Long
    hStdInput       As Long
    hStdOutput      As Long
    hStdError       As Long
End Type

Public Declare Function WaitForSingleObject Lib
"kernel32" ( _
    ByVal hProcess As Long, ByVal dwMilliseconds As
Long) As Long

Public Declare Function InputIdle Lib "user32" Alias
"WaitForInputIdle" ( _
    ByVal hProcess As Long, ByVal dwMilliseconds As
Long) As Long

Public Declare Function CreateProcessA Lib "kernel32"
( _
    ByVal lpApplicationName As Long, ByVal
lpCommandLine As String, _
    ByVal lpProcessAttributes As Long, ByVal
lpThreadAttributes As Long, _
    ByVal bInheritHandles As Long, ByVal
dwCreationFlags As Long, _
    ByVal lpEnvironment As Long, ByVal
lpCurrentDirectory As Long, _
    lpStartupInfo As STARTUPINFO,
lpProcessInformation As _
    PROCESS_INFORMATION) As Long

Public Declare Function GetLastError Lib "kernel32"
() As Long

Private Type OPENFILENAME
    lStructSize As Long
    hwndOwner As Long
    hInstance As Long
    lpstrFilter As String
    lpstrCustomFilter As String
    nMaxCustFilter As Long
    nFilterIndex As Long
    lpstrFile As String
    nMaxFile As Long
    lpstrFileTitle As String
    nMaxFileTitle As Long
    lpstrInitialDir As String
    lpstrTitle As String
    Flags As Long
    nFileOffset As Integer
    nFileExtension As Integer
    lpstrDefExt As String
    lCustData As Long
    lpfnHook As Long
    lpTemplateName As Long
End Type

Private Declare Function GetOpenFileName Lib
"COMDLG32" _
        Alias "GetOpenFileNameA" (file As
OPENFILENAME) As Long

Private Declare Function lstrlen Lib "kernel32" (lpsz
As String) As Long

Public Const MAX_PATH = 255

' Used when creating a process
Public Const SW_SHOWMINNOACTIVE = 7
Public Const STARTF_USESHOWWINDOW = &H1

Public Const MB_YESNOCANCEL = &H3&
Public Const MB_ABORTRETRYIGNORE = &H2&
Public Const MB_OK = &H0&

Public Const MB_APPLMODAL = &H0&

Public Const MB_ICONQUESTION = &H20&
Public Const MB_ICONEXCLAMATION = &H30&

Public Const IDABORT = 3
Public Const IDRETRY = 4
Public Const IDIGNORE = 5
Public Const IDYES = 6
Public Const IDNO = 7
Public Const IDCANCEL = 2

Private Declare Function MessageBox Lib "user32"
Alias "MessageBoxA" ( _
        ByVal hWnd As Long, ByVal lpText As String, _
        ByVal lpCaption As String, ByVal wType As
Long) As Long

Private Type SYSTEMTIME
        wYear As Integer
        wMonth As Integer
        wDayOfWeek As Integer
        wDay As Integer
        wHour As Integer
        wMinute As Integer
        wSecond As Integer
        wMilliseconds As Integer
End Type

Private Declare Function Get64BitTime Lib
"smtime.dll" ( _
        ByVal lpInitTime As Any) As Currency

Public Function ShowMessageBox(hWnd As Long, strText
As String, _
        strTitle As String, wType As Integer) As Long
    ' Using the Windows MessageBox Api since the VB
Msgbox function suppresses
    ' all events
    ShowMessageBox = MessageBox(hWnd, ByVal strText,
ByVal strTitle, wType)

    If ShowMessageBox = 0 Then
        LogSystemError
        Err.Raise vbObjectError + errConfirmFailed,
App.EXEName, _
                LoadResString(errConfirmFailed)
    End If

End Function
Public Function ShowFileOpenDialog(ByVal strFilter As
String, _
        ByVal strDialogTitle As String, ByVal
lngFlags As Long, _
        Optional ByVal strOldFile As String =
gstrEmptyString) As String
    ' Returns the file name selected by the user
    Dim strInitDir As String
    Dim intPos As Integer
    Dim opfile As OPENFILENAME
    Dim sFile As String

    On Error GoTo ShowFileOpenDialogErr

    If Not StringEmpty(strOldFile) Then
        intPos = InstrR(strOldFile,
gstrFileSeparator)
        If intPos > 0 Then
            strInitDir = Left$(strOldFile, intPos -
1)
        End If
    End If

    With opfile
        .lStructSize = Len(opfile)
        .Flags = lngFlags
        .lpstrInitialDir = strInitDir
        .lpstrTitle = strDialogTitle
        .lpstrFilter = MakeWindowsFilter(strFilter)
        sFile = strOldFile & String$(MAX_PATH -
Len(strOldFile), 0)
        .lpstrFile = sFile
        .nMaxFile = MAX_PATH
    End With

    If GetOpenFileName(opfile) Then
        ShowFileOpenDialog = Left$(opfile.lpstrFile,
InStr(opfile.lpstrFile, vbNullChar) - 1)
    Else
        ShowFileOpenDialog = strOldFile
```


© 2006 Hewlett-Packard Company. All rights reserved.

```
    End If

    Exit Function

ShowFileOpenDialogErr:
    Call LogErrors(Errors)
    ' Reset the selection to the passed in file, if
any
    ShowFileOpenDialog = strOldFile

End Function

Private Function MakeWindowsFilter(sFilter As String)
As String

    Dim s As String, ch As String, iTemp As Integer

    On Error GoTo MakeWindowsFilterErr

    ' To make Windows-style filter, replace | and :
with nulls
    For iTemp = 1 To Len(sFilter)
        ch = Mid$(sFilter, iTemp, 1)
        If ch = "|" Then
            s = s & vbNullChar
        Else
            s = s & ch
        End If
    Next iTemp

    ' Put double null at end
    s = s & vbNullChar & vbNullChar
    MakeWindowsFilter = s

    Exit Function

MakeWindowsFilterErr:
    Call LogErrors(Errors)
    gstrSource = mstrModuleName & "MakeWindowsFilter"
    On Error GoTo 0
    Err.Raise vbObjectError + errApiFailed,
gstrSource, _
            LoadResString(errApiFailed)

End Function


Public Function GetShortName(ByVal sLongFileName As
String) As String
    ' Returns the short name for the passed in file -
will only work
    ' if the passed in path/file exists

    Dim lRetVal As Long, sShortPathName As String,
iLen As Integer
    Dim sLongFile As String
    Dim sDir As String
    Dim sFile As String
    Dim intPos As Integer

    On Error GoTo GetShortNameErr

    sFile = gstrEmptyString
    sLongFile = MakePathValid(sLongFileName)
    If StringEmpty(Dir$(sLongFile, vbNormal +
vbDirectory)) Then
        ' The passed in path is a file that does not
exist - since
        ' the GetShortPathName api does not work on
non-existent files
        ' on Win2K, use the directory as an argument
to the api and
        ' then append the file
        intPos = InstrR(sLongFile, gstrFileSeparator)
        sDir = Mid$(sLongFile, 1, intPos - 1)
        sFile = Right(sLongFile, Len(sLongFile) -
intPos + 1)
        sLongFile = sDir
    End If

    'Set up buffer area for API function call return
    sShortPathName = Space(MAX_PATH)
    iLen = Len(sShortPathName)

    'Call the function
    lRetVal = GetShortPathName(sLongFile,
sShortPathName, iLen)
    If lRetVal = 0 Then
        Call LogSystemError
    End If

    GetShortName = IIf(lRetVal = 0, sLongFile,
Left(sShortPathName, lRetVal))
    If Not StringEmpty(sFile) Then
        GetShortName = GetShortName & sFile
    End If

    Exit Function

GetShortNameErr:
    Call LogErrors(Errors)
    gstrSource = mstrModuleName & "GetShortName"
    On Error GoTo 0
    Err.Raise vbObjectError + errApiFailed,
gstrSource, _
            LoadResString(errApiFailed)

End Function
Public Function Determine64BitTime() As Currency

    Determine64BitTime = Get64BitTime(ByVal 0&)

End Function
```

WorkspaceCommon.bas

```
Attribute VB_Name = "WorkspaceCommon"
'  FILE:       WorkspaceCommon.bas
'              Microsoft TPC-H Kit Ver. 1.00
'              Copyright Microsoft, 1999
'              All Rights Reserved
'
'
'  PURPOSE:    Contains functionality common across
StepMaster and
'              SMRunOnly, pertaining to workspaces
'              Specifically, functions to read
workspace records from
'              the database and so on.
'  Contact:    Reshma Tharamal
(reshmat@microsoft.com)
'
Option Explicit

' Used to indicate the source module name when errors
' are raised by this module
Private Const mstrModuleName As String =
"WorkspaceCommon."


Public Function GetWorkspaceDetails( _
    Optional ByVal WorkspaceId As Long, _
    Optional WorkspaceName As String =
gstrEmptyString _
    ) As Variant
    ' Depending on the passed in parameter, it
returns
    ' either the workspace name or the workspace
identifier
    ' in a variant. The calling function must convert
the
    ' return value to the appropriate type

    Dim rstWorkspace As Recordset
    Dim qyWsp As DAO.QueryDef
    Dim strSql As String
    Dim cTempStr As cStringSM

    On Error GoTo GetWorkspaceDetailsErr
    gstrSource = mstrModuleName &
"GetWorkspaceDetails"

    If WorkspaceId = 0 And _
            WorkspaceName = gstrEmptyString Then
        On Error GoTo 0
        Err.Raise vbObjectError +
errMandatoryParameterMissing, _
                gstrSource, _

LoadResString(errMandatoryParameterMissing)
    End If

    Set cTempStr = New cStringSM

    If WorkspaceId = 0 Then
        strSql = " Select workspace_id from
att_workspaces " & _
                " where workspace_name = [w_name] "
        Set qyWsp =
dbsAttTool.CreateQueryDef(gstrEmptyString, strSql)
        qyWsp.Parameters("w_name").Value =
WorkspaceName
    Else
```


© 2006 Hewlett-Packard Company. All rights reserved.

```
        strSql = " Select workspace_name from
att_workspaces " & _
                " where workspace_id = [w_id] "
        Set qyWsp =
dbsAttTool.CreateQueryDef(gstrEmptyString, strSql)
        qyWsp.Parameters("w_id").Value = WorkspaceId
    End If

    Set cTempStr = Nothing

    Set rstWorkspace =
qyWsp.OpenRecordset(dbOpenForwardOnly)

    If rstWorkspace.RecordCount <> 0 Then
        GetWorkspaceDetails = rstWorkspace.Fields(0)
    Else
        rstWorkspace.Close
        qyWsp.Close
        On Error GoTo 0
        Err.Raise vbObjectError +
errInvalidWorkspaceData, _
                gstrSource, _

LoadResString(errInvalidWorkspaceData)
    End If

    rstWorkspace.Close
    qyWsp.Close
    Exit Function

GetWorkspaceDetailsErr:
    Call LogErrors(Errors)
    gstrSource = mstrModuleName &
"GetWorkspaceDetails"
    On Error GoTo 0
    Err.Raise vbObjectError +
errGetWorkspaceDetailsFailed, _
            gstrSource, _

LoadResString(errGetWorkspaceDetailsFailed)

End Function

Public Sub ReadStepsInWorkspace(rstStepsInWorkSpace
As Recordset, _
        qySteps As DAO.QueryDef, _
        Optional lngWorkspaceId As Long =
glInvalidId, _
        Optional dbLoad As DAO.Database = Nothing, _
        Optional ByVal bSelectArchivedRecords As
Boolean = False)

    ' This function will populate the passed in
recordset with
    ' all the steps for a given workspace (if one is
passed in, else all workspaces)

    Dim strSql As String

    On Error GoTo ReadStepsInWorkspaceErr

    ' Create a recordset object to retrieve all steps
for
    ' the given workspace
    strSql = "Select step_id, step_label,
step_file_name, step_text, " & _
        " start_directory, version_no, workspace_id,
" & _
        " parent_step_id, parent_version_no, " & _
        " sequence_no, step_level, " & _
        " enabled_flag, degree_parallelism, " & _
        " execution_mechanism, " & _
        " failure_details, continuation_criteria, " &
_
        " global_flag, archived_flag, " & _
        " output_file_name, " & _
        " error_file_name, iterator_name " & _
        " from att_steps a " & _
        " where "

        ' log_file_name,

    If lngWorkspaceId <> glInvalidId Then
        strSql = strSql & " workspace_id = [w_id] AND
"
    End If

    If Not bSelectArchivedRecords Then
        strSql = strSql & " archived_flag =
[archived] AND "
    End If

    ' Find the highest X-component of the version
number
    strSql = strSql & " cint( mid( version_no, 1,
instr( version_no, " & gstrDQ & gstrVerSeparator &
gstrDQ & " ) - 1 ) ) = " & _
        " ( select max( cint( mid( version_no, 1,
instr( version_no, " & gstrDQ & gstrVerSeparator &
gstrDQ & " ) - 1 ) ) ) " & _
        " from att_steps AS d " & _
        " WHERE a.step_id = d.step_id ) "

    ' Find the highest Y-component of the version
number for the highest X-component
    strSql = strSql & " AND cint( mid( version_no,
instr( version_no, " & gstrDQ & gstrVerSeparator &
gstrDQ & " ) + 1 ) ) = " & _
        " ( select max( cint( mid( version_no, instr(
version_no, " & gstrDQ & gstrVerSeparator & gstrDQ &
" ) + 1 ) ) ) " & _
        " from att_steps AS b " & _
        " Where a.step_id = b.step_id " & _
        " AND cint( mid( version_no, 1, instr(
version_no, " & gstrDQ & gstrVerSeparator & gstrDQ &
" ) - 1 ) ) = " & _
        " ( select max( cint( mid( version_no, 1,
instr( version_no, " & gstrDQ & gstrVerSeparator &
gstrDQ & " ) - 1 ) ) ) " & _
        " from att_steps AS c " & _
        " WHERE a.step_id = c.step_id ) ) "

    ' Append the order clause as follows
    ' First, separate all global/non-global steps
    ' Order the worker and manager steps by
step_level to
    ' ensure that the parent steps are populated
before
    ' any sub-steps within it
    ' Further ordering by parent_step_id and
sequence_no
    ' ensures that all the children within a parent
are
    ' selected in the necessary order
    strSql = strSql & " order by global_flag,
step_level, " & _
        " parent_step_id, sequence_no "

    If dbLoad Is Nothing Then Set dbLoad = dbsAttTool

    ' Create a temporary Querydef object
    Set qySteps =
dbLoad.CreateQueryDef(gstrEmptyString, strSql)

    ' Initialize the parameter values
    If lngWorkspaceId <> glInvalidId Then
        qySteps.Parameters("w_id").Value =
lngWorkspaceId
    End If

    If Not bSelectArchivedRecords Then
        qySteps.Parameters("archived").Value = False
    End If

    Set rstStepsInWorkSpace =
qySteps.OpenRecordset(dbOpenSnapshot)

    Exit Sub

ReadStepsInWorkspaceErr:

    LogErrors Errors
    gstrSource = mstrModuleName &
"ReadStepsInWorkspace"
    On Error GoTo 0
    Err.Raise vbObjectError +
errReadWorkspaceDataFailed, _
            gstrSource, _
            LoadResString(errReadWorkspaceDataFailed)

End Sub
Public Sub ReadWorkspaces(dbLoad As Database, rstWsp
As Recordset, _
        qyWsp As DAO.QueryDef, _
        Optional ByVal bSelectArchivedRecords As
Boolean = False)

    ' This function will populate the passed in
recordset with all workspace records

    Dim strSql As String

    On Error GoTo ReadWorkspacesErr

    ' Create a recordset object containing all the
workspaces
    ' (that haven't been archived) in the database
    strSql = " Select workspace_id, workspace_name,
archived_flag " & _
```


© 2006 Hewlett-Packard Company. All rights reserved.

```
            " from att_workspaces "

    If Not bSelectArchivedRecords Then
        strSql = strSql & " where archived_flag =
[archived]"
    End If
    strSql = strSql & " order by workspace_name"

    Set qyWsp =
dbLoad.CreateQueryDef(gstrEmptyString, strSql)
    If Not bSelectArchivedRecords Then
        qyWsp.Parameters("archived").Value = False
    End If

    Set rstWsp =
qyWsp.OpenRecordset(dbOpenForwardOnly)

    Exit Sub

ReadWorkspacesErr:

    LogErrors Errors
    gstrSource = mstrModuleName & "ReadWorkspaces"
    On Error GoTo 0
    Err.Raise vbObjectError +
errReadWorkspaceDataFailed, _
            gstrSource, _
            LoadResString(errReadWorkspaceDataFailed)

End Sub
Public Sub ShowWorkspacesInDb(dbLoad As Database)

    Dim recWorkspaces As Recordset
    Dim qryAllWsp As QueryDef

    On Error GoTo ShowWorkspacesInDbErr

    ' Set the mousepointer to indicate Busy
    Call ShowBusy

    Load frmWorkspaceOpen

    Call ReadWorkspaces(dbLoad, recWorkspaces,
qryAllWsp)

    frmWorkspaceOpen.lstWorkspaces.Clear

    ' Load all the workspaces into the listbox
    If recWorkspaces.RecordCount <> 0 Then
        Do
            ' Add the workspace name to the list and
store
            ' the corresponding workspace id as the
ItemData
            ' property of the item.
            ' The workspace id will be used for all
further
            ' processing of the workspace
            frmWorkspaceOpen.lstWorkspaces.AddItem
recWorkspaces![workspace_name]

frmWorkspaceOpen.lstWorkspaces.ItemData(frmWorkspaceO
pen.lstWorkspaces.NewIndex) = _
                    recWorkspaces![workspace_id]
            recWorkspaces.MoveNext

        Loop Until recWorkspaces.EOF
    End If
    recWorkspaces.Close
    qryAllWsp.Close

    ' Reset the mousepointer
    ShowFree

    #If RUN_ONLY Then
        frmWorkspaceOpen.Show vbModal
    #Else
        frmWorkspaceOpen.Show vbModal, frmMain
    #End If

    Exit Sub

ShowWorkspacesInDbErr:
    LogErrors Errors
    Call ShowFree
    Err.Raise vbObjectError + errProgramError,
mstrModuleName & "ShowWorkspacesInDb", _
            LoadResString(errProgramError)

End Sub
Private Sub ReadWorkspaceParameters(lngWorkspaceId As
Long, _
    rstWorkSpaceParameters As Recordset, _
    qyWspParams As DAO.QueryDef)

    ' Will populate the recordset with all the
parameters for
    ' a given workspace

    Dim strSql As String

    On Error GoTo ReadWorkspaceParametersErr

    strSql = "Select parameter_id, parameter_name, "
& _
            " parameter_value, workspace_id,
parameter_type, description " & _
            " from workspace_parameters " & _
            " where workspace_id = [w_id] " & _
            " order by parameter_name,
parameter_value "

    ' Create a temporary Querydef object and
initialize
    ' it's parameter values
    Set qyWspParams =
dbsAttTool.CreateQueryDef(gstrEmptyString, strSql)
    qyWspParams.Parameters("w_id").Value =
lngWorkspaceId

    Set rstWorkSpaceParameters =
qyWspParams.OpenRecordset(dbOpenSnapshot)

    Exit Sub

ReadWorkspaceParametersErr:

    LogErrors Errors
    gstrSource = mstrModuleName &
"ReadWorkspaceParameters"
    On Error GoTo 0
    Err.Raise vbObjectError +
errReadWorkspaceDataFailed, _
            gstrSource, _
            LoadResString(errReadWorkspaceDataFailed)

End Sub
Private Sub ReadConnections(lngWorkspaceId As Long,
rstConns As Recordset, _
    qyConns As DAO.QueryDef)

    ' Will populate the recordset with all the
parameters for
    ' a given workspace

    Dim strSql As String

    On Error GoTo ReadWorkspaceParametersErr

    strSql = "Select connection_id, " & _
            " connection_name, connection_value,
workspace_id, description, " & _
            " no_count_display, no_execute,
parse_query_only, ANSI_quoted_identifiers, " & _
            " ANSI_nulls, show_query_plan,
show_stats_time, show_stats_io, " & _
            " parse_odbc_msg_prefixes, row_count,
tsql_batch_separator, query_time_out, " & _
            " server_language, character_translation,
regional_settings " & _
            " from workspace_connections " & _
            " where workspace_id = [w_id] " & _
            " order by connection_name,
connection_value "

    ' Create a temporary Querydef object and
initialize
    ' it's parameter values
    Set qyConns =
dbsAttTool.CreateQueryDef(gstrEmptyString, strSql)
    qyConns.Parameters("w_id").Value = lngWorkspaceId

    Set rstConns =
qyConns.OpenRecordset(dbOpenSnapshot)

    Exit Sub

ReadWorkspaceParametersErr:

    LogErrors Errors
    On Error GoTo 0
    Err.Raise vbObjectError +
errReadWorkspaceDataFailed, _
            mstrModuleName & "ReadConnections",
LoadResString(errReadWorkspaceDataFailed)

End Sub
Private Sub ReadConnectionDtls(lngWorkspaceId As
Long, rstConns As Recordset, _
```


© 2006 Hewlett-Packard Company. All rights reserved.

```
    qyConns As DAO.QueryDef)

    ' Will populate the recordset with all the
connection_dtls records for
    ' a given workspace

    Dim strSql As String

    On Error GoTo ReadWorkspaceParametersErr

    strSql = "Select " & FLD_ID_CONN_NAME & ", " & _
            FLD_CONN_DTL_CONNECTION_NAME & ", " & _
            FLD_CONN_DTL_CONNECTION_STRING & ", " & _
            FLD_ID_WORKSPACE & ", " & _
            FLD_CONN_DTL_CONNECTION_TYPE & _
            " from " & TBL_CONNECTION_DTLS & _
            " where " & FLD_ID_WORKSPACE & " = [w_id]
" & _
            " order by " &
FLD_CONN_DTL_CONNECTION_NAME

    ' Create a temporary Querydef object and
initialize
    ' it's parameter values
    Set qyConns =
dbsAttTool.CreateQueryDef(gstrEmptyString, strSql)
    qyConns.Parameters("w_id").Value = lngWorkspaceId

    Set rstConns =
qyConns.OpenRecordset(dbOpenSnapshot)

    Exit Sub

ReadWorkspaceParametersErr:

    LogErrors Errors
    On Error GoTo 0
    Err.Raise vbObjectError +
errReadWorkspaceDataFailed, _
            mstrModuleName & "ReadConnectionDtls",
LoadResString(errReadWorkspaceDataFailed)

End Sub

Public Sub ReadWorkspaceData(lngWorkspaceId As Long,
_
        cStepsCol As cArrSteps, _
        cParamsCol As cArrParameters, _
        cConsCol As cArrConstraints, _
        cConns As cConnections, _
        cConnDetails As cConnDtls, _
        rstStepsInWsp As Recordset, _
        qyStepsInWsp As DAO.QueryDef, _
        rstParamsInWsp As Recordset, _
        qyParamsInWsp As DAO.QueryDef, _
        rstConns As Recordset, _
        qyConns As DAO.QueryDef, _
        rstConnDtls As Recordset, _
        qyConnDtls As DAO.QueryDef)
    ' Loads the passed in structures with all the
data for
    ' the workspace. It also initializes the
recordsets
    ' with the step and parameter records for the
workspace.

    On Error GoTo ReadWorkspaceDataErr

    ShowBusy

    Call ReadStepsInWorkspace(rstStepsInWsp,
qyStepsInWsp, lngWorkspaceId)

    ' Load all the steps in the array
    LoadRecordsetInStepsArray rstStepsInWsp,
cStepsCol

    ' Initialize the steps with all the iterator
    ' records for each step
    Call LoadIteratorsForWsp(cStepsCol,
lngWorkspaceId, rstStepsInWsp)

    ReadWorkspaceParameters lngWorkspaceId,
rstParamsInWsp, qyParamsInWsp

    ' Load all the workspace parameters in the array
    LoadRecordsetInParameterArray rstParamsInWsp,
cParamsCol

    ' Read and load connection strings
    ReadConnections lngWorkspaceId, rstConns, qyConns

    LoadRecordsetInConnectionArray rstConns, cConns

    ' Read and load connection information
    ReadConnectionDtls lngWorkspaceId, rstConnDtls,
qyConnDtls

    LoadRSInConnDtlArray rstConnDtls, cConnDetails

    ' Finally, load the step constraints collection
class with
    ' all the constraints for the steps in the
workspace
    cConsCol.LoadConstraints lngWorkspaceId,
rstStepsInWsp

    ShowFree
    Exit Sub

ReadWorkspaceDataErr:
    ' Log the error code raised by Visual Basic
    ShowFree
    Call LogErrors(Errors)
    On Error GoTo 0
    gstrSource = mstrModuleName & "ReadWorkspaceData"
    Err.Raise vbObjectError +
errReadWorkspaceDataFailed, _
            gstrSource, _
            LoadResString(errReadWorkspaceDataFailed)

End Sub
```


© 2006 Hewlett-Packard Company. All rights reserved.

Appendix G: Price Quotations

© 2006 Hewlett-Packard Company. All rights reserved.

Microsoft Corporation
One Microsoft Way
Redmond, WA 98052-6399

Tel 425 882 8080
Fax 425 936 7329
http://www.microsoft.com/

Microsoft

November 1, 2005

Hewlett-Packard
Company
Daniel Pol
20555 SH 249
Houston, TK 77070

Mr. Pol:

Here is the information you requested regarding pricing for several Microsoft products to be used in conjunction with your TPC-H benchmark testing.

All pricing shown is in US Dollars ($).

Part Number	Description	Unit Price	Quantity	Price
810-04793	**SQL Server 2005 Enterprise x64 Edition** *Server License with 25 CALs* *Discount Schedule: Open Program - No Level* *Unit Price reflects a 39% discount from the retail unit price of $13,969.*	$8,487	1	$8,487
359-01911	**SQL Server 2005 Client License** *Discount Schedule: Open Program - No Level* *Unit Price reflects a 4% discount from the retail unit price of $163.*	$156	25	$3,900
P72-00274	**Windows Server 2003 Enterprise x64 Edition** *Server License Only - No CALs* *Discount Schedule: Open Program - No Level* *Unit Price reflects a 42% discount from the retail unit price of $3,999.*	$2,334	1	$2,334
254-00170	**Visual C++ Standard Edition** *No Discounts Applied*	$109	1	$109
046-00856	**Visual Basic 2003 .Net Professional** *No Discounts Applied*	$109	1	$109
N/A	**Microsoft Problem Resolution Services** *Professional Support* *(1 Incident)*	$245	1	$245

Some products may not be currently orderable but will be available through Microsoft's normal distribution channels by November 7, 2005.

Defect support is included in the purchase price. Additional support is available from Microsoft PSS on an incident by incident basis at $245 per call.

© 2006 Hewlett-Packard Company. All rights reserved.